central T subway

Connecting people. Connecting communities.

Transmittal

CS Transmittal No. 2169

To:	Jeff Davis	**From:**	John Funghi
	FTA	**Project No./Contract No.:**	M544.1, CS-149
	201 Mission Street, Suite 1650	**Task No./Title:**	1-6.01 Interagency Coordination
	San Francisco, CA 94105	**Project Phase:**	
Date:	February 11, 2013	**Subject:**	CN 1252 TBM Submittal
Reference:			

Sent via:	☐ *mail*	☐ *overnight*	☐ *messenger*	☐ *hand-delivered*
	☐ *fax – **No:***		☒ *email – **Address:***	jeffrey.s.davis@dot.gov

The following:		***For your:***	***Due date:***
☐ *copy of letter/memo*	☐ *estimate*	☒ *information/use*	N/A
☐ *minutes/agenda*	☐ *schedule*	☐ *action*	
☐ *report*	☐ *deliverable*	☐ *review/comment*	
☐ *presentation*	☐ *review comment form*	☐ *response to comment*	
☒ *cd / dvd*	☐ *no review comment form*	☐ *concurrence*	
☐ *specifications*	☐ *review comments*	☐ *incorporation of comments*	
☐ *half-size drawings*	☐ *response to comments*	☐ *verification*	
☐ *full-size drawings*	☐ *concurrence with response*	☐ *signature*	
☐ *sketches/maps/layouts*	☐ *verification of incorporation*	☐ *acceptance/approval*	
☐ *reference material*	☐ *acceptance/approval*	☐ *other* _____	
☐ *other* _____		_____	

Item No.	***Copies***	***Description***	***Rev. No.***	***Date***
1	1	CD with CN 1252 Tunnel Boring Machine (TBM) Submittal		Nov 2012

If enclosures are not as noted, kindly notify us at once.

Remarks:

Enclosed please find CD with Contract 1252 Tunnel Boring Machine (TBM) Submittal.

John Funghi
Program Director

JF:smk

cc: David Kuehn, STV (w/attachments) david.kuehn@stvinc.com
Brad Lebovitz, STV (w/o attachments) bradley.lebovitz@stvinc.com
Eric Stassevitch, CSP (w/o attachments)
CS File No. M544.1.5.0050

SUBMITTAL REVIEW COMMENTS

SFMTA

CITY AND COUNTY OF SAN FRANCISCO
MUNICIPAL TRANSPORTATION AGENCY

CONTRACT NAME:	Central Subway Tunneling	**SUBMITTAL NO:**	31 71 19-002
CONTRACT NO:	1252	**REVIEW CYCLE NO:**	002
SUBMITTAL NAME:	TBM Shop Drawings	**COMMENTS DATE:**	01/03/2012
SPEC SECTION NAME:	Tunnel Excavation by Tunnel Boring (31 71 19)		

DISPOSITION: (please mark with an "**X**")

- [x] Approved
- [ ] Approved as Noted
- [ ] Approved as Noted- Resubmittal Required
- [ ] Disapproved- Resubmit
- [ ] Rejected
- [ ] No Action Required

COMMENTED BY: Matt Fowler

REVIEW COMMENTS:

Revision 2 of the TBM Shop Drawings satisfactorily addresses the comments and requests for additional information made in the review of the prior submittal as needed to demonstrate compliance with Articles 1.06 (TBM Manufacturer Experience) and 1.07 (TBM Shop Drawings). Referring to Article 1.07, the shop drawings indicate the twin EPB machines now being fabricated meet with our specified requirements for the following minimum capabilities:

-- Provide positive face pressure and maintain face stability
-- Erect permanent tunnel lining system of precast concrete segments with gaskets
-- Shield gap injection system
-- Tail shield segment backfill grouting system
-- Soil conditioning system
-- Equipped with the requisite air and equipment locks for tunnel interventions
-- Drills and installation systems for check grouting
-- Provisions to drill probe holes and grouting pipes through the tunnel face and around the shield perimeter

Other comments from the Revision 1 submittal (Comment 3 -- work plan, and Comment 5 -- comply with CalOSHA requirements) were acknowledged and will be addressed in separate submittals.

Barnard Impregilo Healy JV

TRANSMITTAL
No. 00865

PO BOX 78270
San Francisco, CA 94107

Phone: 415-546-0799
Fax: 415-546-3822

PROJECT: Contract 1252 - Tunnels

DATE: 11/12/2012

TO: SF Municipal Transportation Agency
821 Howard Street
San Francisco, CA 94103

REF: Submittals

ATTN: Sarah H. Wilson

WE ARE SENDING:	SUBMITTED FOR:	ACTION TAKEN:
☑ Shop Drawings	☑ Approval	☐ Approved as Submitted
☐ Letter	☐ Your Use	☐ Approved as Noted
☐ Prints	☐ As Requested	☐ Returned After Loan
☐ Change Order	☐ Review and Comment	☐ Resubmit
☐ Plans		☐ Submit
☐ Samples	**SENT VIA:**	☐ Returned
☐ Specifications	☑ Attached	☐ Returned for Corrections
☑ Other: Made from Submittal	☐ Separate Cover Via: Mail	☐ Due Date:

ITEM	PACKAGE	SUBMITTAL	DRAWING	REV.	ITEM NO.	COPIES	DATE	DESCRIPTION	STATUS
SUT	317119	31 71 19-002		002		2	11/12/2012	TBM Shop Drawings	NEW

Remarks: Please see the attached Submittal 31 71 19 - 002 Review Cycle 2 TBM Shop Drawings.

CC:

Signed: Matt Paulisich

Primavera ®

Barnard Impregilo Healy JV

PO BOX 78270
San Francisco, CA 94107

Phone: 415-546-0799
Fax: 415-546-3822

SUBMITTAL
NO. 31 71 19-002
PACKAGE NO: 317119

TITLE: TBM Shop Drawings
PROJECT: Contract 1252 - Tunnels
DRAWING:
STATUS: NEW
BIC: SFMTA

REQUIRED START: 7/17/2012
REQUIRED FINISH: 8/17/2012
DAYS HELD: 0
DAYS ELAPSED: 118
DAYS OVERDUE: 87

RECEIVED FROM		SENT TO		RETURNED BY		FORWARDED TO	
BIHJV	MP	SFMTA	SHW	SFMTA	SHW	BIHJV	BDC

Revision No.	Description / Remarks	Received	Sent	Returned	Forwarded	Status	Sepias	Prints	Drawing Date	Held	Elapsed
001	TBM Shop Drawings	7/17/2012	7/17/2012	9/5/2012		ANR	0	0		68	118
	Submitted for your approval in accordance with Specification Section 31 71 19 1.07 A.a. are TBM Shop Drawings.										
002	TBM Shop Drawings	11/12/2012	11/12/2012			NEW	0	0		0	0
	Resubmitted for approval are TBM Shop Drawings.										

BARNARD IMPREGILO HEALY JOINT VENTURE

THIRD STREET LIGHT RAIL PROGRAM

PHASE 2 – CENTRAL SUBWAY

CONTRACT 1252 - TUNNELS

Central Subway

TBM Design Submittal

Specification Section 31 71 19

Submittal Number 31 71 19 – 002 - Rev 1

12-NOV-2012

BARNARD IMPREGILO HEALY JOINT VENTURE

Additional submittal information has been included to address comments received from 31 71 19 -002 Rev 0. The PDF version includes bookmarks for ease of reference.

Response to Comments Received – 9/5/2012

1. Comment: "*Provide TBM Manufacturer Experience as required by Specification Section 31 71 19 -1.06.A.1. and 31 71 19-106.A.2"*

   Response: This information was previously submitted and approved. Reference Submittal 31 71 19 -001.

2. Comment: "*The TBM is compliant as far as the submitted. Submit the following systems as they become available from the manufacturer:*
   a. *Electrical Systems;*
   b. *TBM Manlock and Materials Lock;*
   c. *Volume and Weight Measurement System;*
   d. *Working Chamber Ventilation in Free Air and Under Compressed Air*
   e. *The TMB appears to comply with the requirements of Section 1.07.A.1. with the exception of paragraph 10.b "providing a written certification from TBM manufacturer of full and complete design coordination…" This should be submitted once TBM and Segment details have been finalized."*

   Response:

   a. Updated Electrical schematics have been included.
   b. Details for the TBM manlock and material lock are included.
   c. The muck volume and weight measurement system has been added to the conveyor section.
   d. Details for working chamber ventilation are included in the breathing air system schematics. A brief system description has been included by the designer. The system supplies breathing air to the working chamber in both free air and when under compressed air. It will be used for both cases to supply fresh air to the working chamber. In addition to the breathing air system, portable bag-line with a fan will be run through the man lock to add additional ventilation to the working chamber during free air interventions.
   e. A certifying letter from the TBM manufacturer is included in the segment erector portion of the submittal.

3. Comment: "*Provide detailed work plan submittals and related details for approval as required. These may be submitted separately.*"

   Response: Detail work plans will be submitted under separate cover.

4. Submit complete details and operations in compressed air and associated systems, and worker transport and protection for approval as detailed in the Specifications.

   Response: Schematics and cut sheets of the TBM breathing air system are included. Specifics of the compressed air working plan and associated protocols will be submitted under separate cover.

5. Comment: *"Comply with the requirements of California Division of Occupational Safety and Health Title 8, Chapter 4, Subchapter 20 – Tunnel Safety Orders, and obtain prior approvals as required under OSHA 29 CFR 1926.803, Subpart S, per Specification Section 31 71 19 – 1.03.A."*

   Response: Acknowledged.

The Robbins Company
MODEL EPB2016-376/377
EPB Design Submittal – Rev 2

Prepared for:

San Francisco Central Subway project

September 17, 2012

Title	Section
General Information	0
General Description	1
Operation	2
Maintenance	3
General Assembly	4
Cutterhead Assembly	5
Cutterhead Support Assembly	6
Forward Shield Assembly	7
Main Drive Assembly	8
Rear Shield Assembly	9
Screw Conveyor Assembly	10
Segment Erector Assembly	11
Operator Station Assembly	12
Lube System Assembly	13
Hydraulic System Assembly	14
Electrical System Assembly	15
Water System Assembly	16
Air System Assembly	17
Ground Conditioning Equipment	18
Position Monitoring Equipment	19
Walkways and Ladders	20

Title	Section
Back-up Equipment	21
Probe Drill Assembly	22

MODEL EPB2016-376/377
SECTION 0 • General Information

1. INTRODUCTION
2. DESCRIPTION OF MANUAL CONTENTS
3. HOW TO USE THE MANUAL
4. REVISION RECORD
5. WARRANTY AND LIABILITY LIMITATION
6. INSTRUCTIONS FOR ORDERING SPARE PARTS
7. GENERAL SPECIFICATIONS

1 Introduction

The Robbins Model EPB2016-376/377 tunnel boring machines have been specifically designed for use in mixed ground conditions and therefore are equipped with features suitable for this application. These features will be covered in detail in the Description section of this manual.

These machines are completely shielded and are equipped with a segment erector system to allow placement of concrete lining segments as the machines advance. A rotary cutterhead assembly is utilized on the machine.

Rotary power is supplied by five variable frequency drive 281.6 HP (210kW), water-cooled, three-phase, electric motors, which drive the cutterhead through associated gear reducer assemblies from 0 to 4.5 RPM.

The maximum thrust force is 35,870 kN.

This machine is equipped with an Enzan Tunnel Guidance & Logger System for position monitoring.

A screw conveyor is used to transport rock cuttings from the cutterhead area to the rear of the machine for transfer to the back-up conveyor that move this material into transport cars for removal from the tunnel.

2 Description of Manual Contents

The intent of this manual is to provide sufficient information to attain a good working knowledge of the machine from both operational and general maintenance standpoints. Coverage included: (1) A description of the physical and functional characteristics of the equipment; (2) operating procedures; (3) disassembly, service or repair, and assembly procedures and (4) illustrated parts lists.

It is beyond the scope of this manual, however, to detail all conditions or problems which may occur. In the event of problems arising, which are not specifically covered in the text sections of this manual, reference should be made to the appropriate Robbins drawing and/or supplier information contained in Sections 4 through Section 19. It may also be necessary to contact the Robbins Company Field Service Department and/or Engineering Department, in some cases.

The operational systems of the machine are described in detail, with an attempt made to provide sufficient information to allow proper operation of the equipment and efficiently troubleshoot and correct any malfunctions that may occur. Characteristics and functional relationships between the electrical, hydraulic, and mechanical systems must be understood to ensure proper operation and maintenance.

Procedures in this manual assume that only qualified mechanics and electricians will work on the machine. Hydraulic components need special attention to ensure cleanliness and to prevent damage to seals and fittings during assembly. Maintenance of electrical devices demands qualified electricians who know how to service systems with similar voltages and characteristics without endangering personnel or damaging equipment. General precautions and procedures, and information such as the handling of bearings and the tightening of standard size capscrews to proper torque values, are included as guides. Detailed maintenance instructions describe special procedures and safety precautions.

3 How to Use the Manual

Sections 0 through 3 of this manual cover the general and specific descriptions, the operating procedures, and maintenance instructions.

Additional sections of the manual are used for engineering drawings, covering the major assemblies and systems that together make up the complete machine.

3-1 Page Numbering

Sections 4 through 19, containing primarily engineering drawings, are pages-numbered with the section number followed by a period and the page sequence. Any subassembly or detail drawing which is part of this main assembly, and which are included in the manual, are page-numbered with the same basic page number as the top drawing and followed by a hyphen plus an additional digit.

This digit corresponds to the item or piece number as listed on the top drawing. Supplemental material, such as parts and service information, vendor literature, etc., will have the same page number as the relevant drawing, plus a letter (A, B, C, etc.).

For example, in Section 10, Conveyor Assembly, a subassembly called Bulkhead Gate Assembly, (item 6 on the Screw Conveyor Assembly, drawing 1002399) is numbered Page 10.1-6. Figure 0.1, portion of Section 10 Table of Contents is shown below.

1		1002399	SCREW CONVEYOR ASSEMBLY	3	10.1
2		1034043	BULKHEAD GATE ASSEMBLY	0	10.1-6
	3	D113224-1	CYLINDER – BULKHEAD GATE	0	10.1-6-11
2		2004478	SHAFTED SCREW DRIVE – MOTOR	0	10.1-9
2		1001198	PRESSURE SENSOR ASSEMBLY 30MM	1	SEE 7.1-7

Figure 0.1 Table of Contents - Section 10

3-2 Topic Numbering

The topics for each section of the manual are topic-numbered using the sequence number as a prefix, followed by a hyphen (-) and the sub-topic sequence number.

For example, this sub-topic is numbered 3-2 because it is the second sub-topic under topic 3, How to Use the Manual.

A general index for this manual is included in the front of each of the binders. This index lists the various sections of the manual and the applicability of a particular section to this machine. A table of contents is included at the beginning of each section.

3-3 Format Conventions

Two format conventions are used throughout the manual to identify notable topics and hazards. These are examples of the conventions:

NOTE:

Topics of special interest are written in this font and preceded by a "Note Arrow" above the text.

WARNING

Rules, directives, remarks, and warnings that concern safety are written in this format and preceded by a "Warning Bar" above the text. Refer to the SAFETY CONSIDERATIONS section in this manual for additional safety information relating to these machines.

4 Revision Record

The Revision Record is intended to provide a complete record of revisions that may be made to the manual following the original release. These revisions will be numbered sequentially, 1, 2, 3, etc., and will show all changes to the manual. Any changes made to written material in Section 0 through 3, and to any Tables of Contents pages, will be identified by the addition of a revision number to the file name, (Example: 357 & 358s00Rev.1) with month and year, at the lower right-hand corner of the affected page.

Sufficient copies of all changes and additions will be forwarded to the manual owners to permit incorporation into each copy of the manual in their possession. Each revision should be added to the Revision Record section as it is received.

5 Warranty and Liability Limitation

Use only authorized parts. Warranty or Product Liability does not cover any damage or malfunction caused by the use of unauthorized parts.

Any warranty for work performed only covers original Robbins Company parts and components.

6 Instructions for Ordering Spare Parts

To speed up the ordering and shipment of spare parts for the machine, the following procedure should be followed whether the order is made by fax, telephone communication, normal correspondence or electronically.

6-1 Always indicate the following items:

1. The machine model number.
2. The assembly nomenclature and the assembly drawing number which show the desired item and the description of that assembly.
3. The part number, the description of the desired item, and the desired quantity.

EXAMPLE:

Tunnel Boring Machine Model EPB219-364
Screw Conveyor Assembly, Drawing 1002399
Part No. 1032241, Cylinder, 1 each

6-2 If the desired item does not have a Robbins Company drawing part number, specify by using the item number, the Robbins Company stock number (if given), and a brief description of the part as shown on the assembly or installation drawing.

NOTE:

The stock number is shown in the part number column on the drawings as a multiple-digit, hyphenated number that is sometimes preceded by a letter prefix.

6-3 Include all necessary instructions for routing:

1. Shipping address
2. Special marking instructions, if any.
3. Mode of shipment.
4. Special shipping and/or importation instructions.

6-4 Direct all inquires and orders to:

The Robbins Company 29100 Hall Street Solon, OH 44139 USA	Telephone: Fax:	(440) 248-3303 (440) 248-1702
The Robbins Company 5866 South 194th Avenue Kent, WA 98032 USA	Telephone: Fax:	(253) 872-0500 (253) 872-0199

For more information visit our website: www.TheRobbinsCompany.com

7 General Specifications

SPECIFICATIONS

EPB 2016-366/367

Third Street Light Rail – Phase 2
Central T Subway
San Francisco, California
Reference #041511-1-EPB-T

Revision	Date	Revision Description	Drawing #	Robbins Approval
0	01 May 2012	Initial Release		J.Heineman
1	06 June 2012	Added note regarding GBR report. Changed erector stroke to 900mm + 700mm		J.Heineman

The Robbins Company - 29100 Hall Street, Solon, OH 44139 USA T: +1-440-248-3303 F: +1-440-248-1702
Solon, OH ● Kent, WA ● Oak Hill, WV ● China ● India ● Germany ● China ● Italy ● Mexico ● Hong Kong ● Romania

PROPRIETARY STATEMENT

This Technical Proposal discloses proprietary and confidential information, which is the property of The Robbins Company and all its subsidiary companies (hereinafter called "Robbins"). It may not be reproduced in whole or part without written permission from Robbins. It contains confidential information and is submitted under a confidential relationship for the purpose of reviewing the concepts and equipment herein. The recipient agrees by accepting it, not to disclose any information regarding it to any unauthorized person, and not to use it for any other purpose. All patent rights hereto described or referred to are expressly reserved by Robbins.

© The Robbins Company 2011

The Robbins Company - 29100 Hall Street, Solon, OH 44139 USA T: +1-440-248-3303 F: +1-440-248-1702
Solon, OH ● Kent, WA ● Oak Hill, WV ● China ● India ● Germany ● China ● Italy ● Mexico ● Hong Kong ● Romania

1.0 SPECIFICATIONS

1.1 General

Project Name	Third Street Light Rail Phase 2 – Central T Subway
Site Location	San Francisco, California
Maximum Operating Pressure	4 bar

1.2 Tunnel Alignment

Tunnel Length	2,509 m (8,233')
Over burden	
Minimum	Approx 20'
Maximum	Approx 90'
Minimum Curve Radius	
Horizontal	450' (137.16m)
Vertical	3000' (914.4m)
Maximum Gradient	± 7.0 %
Max. Exc. Length	8232' x 2 Lines (2509.114m x 2 lines)

1.3 Geology

The detailed geological conditions can be found in the GBR CS-155-1 Task DP1.03.40 prepared by PB Telamon. For quick reference, the geology can be summarized as follows:

The soils are primarily made up of Franciscan rock and surficial soils. Franciscan bedrock consists of sandstone, shale and mélange. Melange can be overlain with surficial deposits of sand, slope debris, ravine fill, bay mud, clay, landslide deposits and/or historical fill.

Franciscan Rock	753m (2470')
Surficial Soils.	1,747m (5763')

1.4 Segmental Lining (Per BIHJV drawing C101 submitted 14 Dec 2011)

Type	Reinforced concrete segment type
Outside Diameter	Ø 5,994.4 mm (19' 8")

The Robbins Company - 29100 Hall Street, Solon, OH 44139 USA T: +1-440-248-3303 F: +1-440-248-1702
Solon, OH ● Kent, WA ● Oak Hill, WV ● China ● India ● Germany ● China ● Italy ● Mexico ● Hong Kong ● Romania

Inside Diameter	Ø 5,435.6 mm (17'10")
Thickness	279.4 mm (11")
Length	1,220 mm (4') and/or 1,524 mm (5')
Space Required for Key Installation	626mm
Number of Segments	5+1piece
Max. Segment Weight	4.0 ton

1.5 Supplied Power Source

Voltage	13,200 V
Frequency	60 Hz
Phase	Ø 3

2.0 TECHNICAL SPECIFICATIONS – MIXED GROUND EPB MACHINE

2.1 Cutterhead

Standard	Mixed ground cutterhead Includes initial dress of disc cutters and soft ground tools
Excavation Diameter	
For soil	20'7" (6,285mm)
For rock	20'8" (6,305mm)
Disc Cutter Size	17" Wedgelock™ (Disc cutters are interchangeable with knife bits)
Disc Cutter Quantity	40
Over Cutter	
Type	Hydraulic cylinder activated drag bit type over cutter For soft ground use only
Over cut	50 mm from forward shield outside diameter
Quantity	1
Wear Detection	
Wear detection bits	2
Wear detection pipe	1
Opening Ratio of Cutterhead	31%
Material of Cutterhead Structure	ASTM A36

The Robbins Company - 29100 Hall Street, Solon, OH 44139 USA T: +1-440-248-3303 F: +1-440-248-1702
Solon, OH ● Kent, WA ● Oak Hill, WV ● China ● India ● Germany ● China ● Italy ● Mexico ● Hong Kong ● Romania

2.2 Cutterhead Drive

Driving Method	Electric drive variable speed (VFD)
Number of Motors	5
Unitary Power	281 HP (210kW)
Total Cutterhead Power	1405 HP (1,050kW)
Cutterhead Speed	Maximum 4.48 RPM
Working Torque	2165 Ton Ft (5,830 kNm)
Max. Starting Torque	2815 Ton Ft (7,580 kNm)

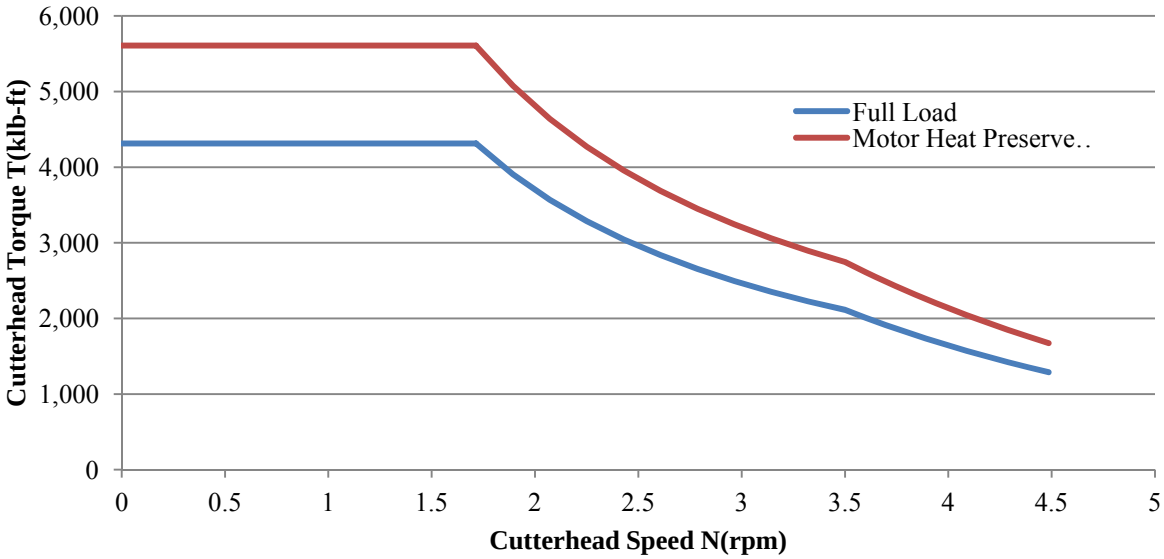

2.3 Main Bearing

Type	3-axis roller bearing
Diameter	120” (Ø 3,050 mm)
Life	> 10,000 hours
Seals	Multi-row of lip type
Lubrication	Oil-filtered & circulated Temperature, flow, pressure, contamination are monitored and controlled

2.4 Main Seal

The Robbins Company - 29100 Hall Street, Solon, OH 44139 USA T: +1-440-248-3303 F: +1-440-248-1702
Solon, OH ● Kent, WA ● Oak Hill, WV ● China ● India ● Germany ● China ● Italy ● Mexico ● Hong Kong ● Romania

Type	Lip seal×4 row
Lubrication	Grease and oil lubricated Flow, pressure, contamination are monitored and controlled

2.5 Shield

Tail Shield Outside Diameter	20'6" (Ø 6,255 mm)
Tail Shield Inside Diameter	19'10" (Ø 6,055 mm)
Tail Thickness	3.94" (100 mm)
Tail Clearance (in radius)	1.2" (30 mm)
Overall Length to end of Screw	45'5" (13,850 mm)
Overall Length to end of tail shield	32'7" (9,939 mm)
Tail Sealing	Wire brush type with mortar-stopping plate 3 rows of wire brush
Working Pressure	4 bar
Tail Grease Injection Port	
Front Injection Port	6 sets (6 ports equally distributed per cavity)
Rear Injection Port	6 sets (6 ports equally distributed per cavity)
Tail Grease Pump	Air actuated Type
Injection Valve	Electric Valve
Port Size	Ø 20 mm
Backfill Grouting Port	
Type	A&B
Port size	Ø 32 mm
Quantity	4+4 (spare ports)
Earth pressure detector	
Type	Load cell based wall mount type, replaceable
Pressure sensing area	Ø 24.5 mm
Rated capacity	5 MPa
Quantity	5

2.6 Thrust

Number of Thrust Cylinders	16
Unitary Thrust	252 tons (2,241 kN)
Total Thrust	Maximum 4032 tons (35,870kN)
Max. Stroke of Cylinders	7'2" (2,200mm)

The Robbins Company - 29100 Hall Street, Solon, OH 44139 USA T: +1-440-248-3303 F: +1-440-248-1702
Solon, OH ● Kent, WA ● Oak Hill, WV ● China ● India ● Germany ● China ● Italy ● Mexico ● Hong Kong ● Romania

Extension Speed	Maximum 4"/min (100 mm/min) [in case all cylinders are operated]
Retract Speed	24"/min (942mm/min) [in case 4 cylinders are operated]
Grouping of Thrust Cylinders	4 Sector (Up, Down, Left, Right)

2.7 Articulation

Type	Active type
Number of Articulation Cylinders	10
Thrust/Cylinder	331 tons (2,950kN)
Stroke	12" (300 mm)
Articulation Angle	±2.5° (left & right), +0.5° (up & down)
Seal Number	2
Position Transducers (external)	4

2.8 Screw Conveyor

Driving Method	Hydraulic drive
Casing Inner Diameter	36" (900 mm)
Speed	1.6 ~ 11.9 RPM
Nominal Torque	34.7 Ton Ft (94 kNm [Normal])
Max. Capacity	9888 Ft^3/h (280 m^3/h)
Power	270 kW
Injection Port	5
Maintenance Window	2
Earth Pressure Sensors	3
Screw Front Gate (bulkhead gate)	Hydraulically actuated, guillotine type
Screw Rear Gate	Hydraulically actuated, guillotine type
Extrude into Mixing Chamber	1/2 pitch
Protection	Replaceable Hard faced screw flights and casing

2.9 Segment Erector

Grip	Mechanical
Speed	0.2 ~ 1.5 RPM
Rotating	
Speed	Maximum
Angle	± 220 °
Axial Stroke (Fwd/Aft)	35.4"+19.7" (900mm+700mm [extension for accessing first two rows of tail seals])

The Robbins Company - 29100 Hall Street, Solon, OH 44139 USA T: +1-440-248-3303 F: +1-440-248-1702
Solon, OH ● Kent, WA ● Oak Hill, WV ● China ● India ● Germany ● China ● Italy ● Mexico ● Hong Kong ● Romania

Radial Stroke (In/Out)	28” (700 mm)
Degrees of Freedom	6
Pitching and Rolling Adjust	±2.5 degree
Handling Weight	4 ton
Power	75 kW

2.10 Man Lock

Type	2—Chamber Type, 3+ 3 person capacity
Position	Top
Dimensions	Ø 1,600 mm x L1,800 mm x 2 chamber
Air Pressure	0.4 MPa

2.11 Material Lock

Type	1-compartment air lock
Dimensions	Ø 700 mm × 1,000 mm
Working Pressure	0.4 MPa

2.12 Injection Ports

Cutterhead	1 ½” x 5+2 ports (Ø40 x 5+2 ports) (Rotary Joint 7 lines)
Bulkhead	2 ½” x 6 ports (Ø80 x 6 ports)
Shield Body	Peripheral 2” x 8 ports (Ø50 x 8 ports) Inclined for probing 3” x 12 ports (Ø80 x 12 ports)
Screw Conveyor	Ø 2” x 5 ports (Ø50 x 5 ports)

2.13 Electrical System

Electrical System	Shield machine will be equipped with electric motors, lightings, electric control system, wiring and all other necessary facilities.
Power Supply	
High Voltage Supply	13,200V (60Hz)
Power Circuit	AC 460 V × 60 Hz × Ø3 AC 120 V x 60 Hz x Ø1 AC 690 V x 60 Hz x Ø3
Control Circuit	DC 24 V AC 120 V × 60 Hz × Ø1

The Robbins Company - 29100 Hall Street, Solon, OH 44139 USA T: +1-440-248-3303 F: +1-440-248-1702
Solon, OH ● Kent, WA ● Oak Hill, WV ● China ● India ● Germany ● China ● Italy ● Mexico ● Hong Kong ● Romania

Protection

Electric Equipment will be designed to be IP55 (except cabinet IP54)
Electric Equipment will be designed Class I Div II
Essential services will be Class 1 Div I

Transformer for Cutterhead Drive

Voltage	13,200 V/690 V
Capacity	1,600 kVA (Extra Capacity for 1 additional CH drive)

Transformer for Others

Voltage	13,200 V/460 V
Capacity	1,250 kVA

Cable Storage

Type	Cable tray (cable not included)
Storage Capacity	300 m

Instrumentation	Power boards, operation panel, terminal boxes, and erector operating box will be provided.
Place of Installation	Each device shall be installed as follows, for easy access and maintenance.
Power Boards	Back-up deck
Operation Panel	Back-up deck
Terminal Boxes	Back-up deck, Inside the shield
Erector Operation	Inside the shield, Portable wireless radio control

Lighting

Florescent Lights	20 W x AC 120 V x 36 no.
Emergency Lights	20 W x AC 120 V x 12 no.

The Robbins Company - 29100 Hall Street, Solon, OH 44139 USA T: +1-440-248-3303 F: +1-440-248-1702
Solon, OH ● Kent, WA ● Oak Hill, WV ● China ● India ● Germany ● China ● Italy ● Mexico ● Hong Kong ● Romania

Control System Instrumentation List

Item	Range	Qty		Remarks
		Detector	Indicator	
Thrust Cylinder Stroke	0 ~ 7'3" (0 ~ 2,200 mm)	4	4	
Thrust Cylinder Speed	0 ~ 4" (0 ~ 100 mm/min)		4	
Thrust Pressure	0 ~ 500 bar	5	1	
Total Thrust	0~4050 Tons (0 ~ 36,000 kN)	-	1	Calculated by PLC
Cutterhead Power	0~1405 HP (0 ~ 1050 kW)	1	1	Calculated by PLC
Screw Conveyor Pressure	0 ~ 250 bar	1	1	
Screw Conveyor Speed	0 ~ 12 RPM	1	1	
Screw Conveyor Volume	9888 ft^3/h (0 ~ 280 m3/h)		1	Calculated by PLC
Screw Gate Opening	0 ~ 100 %	1	1	
Earth Pressure Sensor on Bulkhead	0 ~ 5 bar	5	5	
Earth Pressure Sensor on Screw	0 ~ 5 bar	3	3	
Man Lock Pressure	0 ~ 5 bar	2	2	
Bearing Oil Temperature	212°F (0~100°C)	1	1	
Pitching	±5.0 deg	1	1	
Rolling	±3.0 deg	1	1	

The Robbins Company - 29100 Hall Street, Solon, OH 44139 USA T: +1-440-248-3303 F: +1-440-248-1702
Solon, OH ● Kent, WA ● Oak Hill, WV ● China ● India ● Germany ● China ● Italy ● Mexico ● Hong Kong ● Romania

3.0 TECHNICAL SPECIFICATIONS – BACKUP SYSTEM

3.1 Deck Structure

Type	Gantry type
Quantity	9 decks
Total Length	Approximately 290’ (88m) (TBM + Backup)

3.2 Backfill Grouting –A+B SYSTEM

Type	2 component (A+B) type back fill grouting A-liquid to be pumped from the surface
A-liquid	
Buffer Tank	
Capacity	5 m^3
Quantity	1
Pump	
Type	
Flow	Maximum 100 L/min
Pressure	Maximum 15 bar
Quantity	4
B-liquid	
Buffer Tank (supplied by customer)	
Capacity	1 m^3
Quantity	1
Pump	
Flow	10L/min
Pressure	Maximum 15 bar
Quantity	4

The Robbins Company - 29100 Hall Street, Solon, OH 44139 USA T: +1-440-248-3303 F: +1-440-248-1702
Solon, OH ● Kent, WA ● Oak Hill, WV ● China ● India ● Germany ● China ● Italy ● Mexico ● Hong Kong ● Romania

3.3 Hydraulic Cylinder

Description	Qty	Thrust			Stroke			Working Pressure	
		Tons	(kN)		Ft	(mm)		PSI	(MPa)
Thrust Cylinder	16	252	2,250		7'2"	2,200		5000	35
Articulation Cylinder	10	322	2,950		12"	300		5000	35
Erector Radial Cylinder	2	12.4	110		28"	700		2000	14
Erector Axial Cylinder	1	7.9	70		35.4"	900		2000	14
Erector Support	4	5.4	43		4"	100		2000	14
Screw Gate	2	12	105		27"	690		3000	21

3.4 Hydraulic Oil

Type — Mineral oil, Shell brand
Viscosity — ISO VG 46

3.5 Facilities on the Back-up

No. 1 Deck

Hydraulic Power Unit
Operators Control Station

No. 2 Deck

Tail Grease System
Auto Grease System
Primary Grout System

No. 3 Deck

Bentonite System (Shield gap & Secondary face support)

- Agitator Tank
- Capacity 210 ft^3 /6.0 m^3

The Robbins Company - 29100 Hall Street, Solon, OH 44139 USA T: +1-440-248-3303 F: +1-440-248-1702
Solon, OH ● Kent, WA ● Oak Hill, WV ● China ● India ● Germany ● China ● Italy ● Mexico ● Hong Kong ● Romania

- Pump
- Flow 40 GPM / 150 L/min（9m^3/h）
- Pressure 20 bar 290 PSI / 2.0 MPa
- Type Screw pump or Tube pump
- Quantity 2

VFD Cabinet (Includes extra VFD)
Power Unit – Grout system

No. 4 Deck

Additive System

- Agitator tank
- Capacity 210 ft^3 /6.0 m^3
- Pump
- Flow 40 GPM / 150 L/min（9m^3/h）
- Pressure 20 bar 290 PSI / 2.0 MPa
- Type Screw pump or Tube pump
- Quantity 2
- Injection lines 6 (5 can be connected to cutterhead)

Secondary Grout Storage space (System supplied by customer)
Electrical Cabinet
Power Panel

No. 5 Deck

Foam System

- Agent tank
- Agent pump
- Flow 4.75 GPM / 18 L/min
- Type Screw pump or Tube pump
- Quantity 1
- Solution tank 260 Gal. / 1.0 m^3
- Solution pump
- Flow 16 GPM / 60 L/min
- Pressure 174 PSI / 1.2 MPa
- Type Tube pump
- Quantity 5

Capacity

The Robbins Company - 29100 Hall Street, Solon, OH 44139 USA T: +1-440-248-3303 F: +1-440-248-1702
Solon, OH ● Kent, WA ● Oak Hill, WV ● China ● India ● Germany ● China ● Italy ● Mexico ● Hong Kong ● Romania

- 2.5 m^3/min at 4 bar (based on FIR of 80%, FER of 8, Cf of 3 %, at advance speed of 100 mm/min)

High Voltage Transformer

- Capacity — Total 2,850kVA
- Quantity — 1,600 kVA for cutterhead drive, 1,250 kVA for others

No. 6 Deck

Cooling Water System

Water Supply (by customer)

- Flow — 175 GPM / 40 m^3/h
- Pressure — 110 PSI / 7.5 bar
- Temperature — 82° F / < 28° C
- Quality — <500 microns
- Tank — 800 Gal. / 3 m^3

Pump

- Type — Centrifugal pump
- Flow — 52 GPM / 200 L/min
- Head — 210 ft / 65 m
- Quantity — 3

Dewatering System

- Tank — 800 Gal. / 3 m^3

Pump (inside the TBM & Conveyor transfer point)

- Type — Pneumatic pump
- Flow — 80 GPM / 0.3 m^3/min
- Quantity — 4

Pump (discharging, on deck)

- Type — Submergible pump
- Flow — 320 GPM / 1.2 m^3/min
- Head — 98 ft / 30 m
- Quantity — 1

Emergency Generator — 80 kW

Transfer Switch for Generator — 400A

The Robbins Company - 29100 Hall Street, Solon, OH 44139 USA T: +1-440-248-3303 F: +1-440-248-1702
Solon, OH ● Kent, WA ● Oak Hill, WV ● China ● India ● Germany ● China ● Italy ● Mexico ● Hong Kong ● Romania

No. 7 Deck

Air Compressor

- Compressor
- Flow 350 ft^3 / min @7 bar ; 10N m^3/min at 7 bar
- Pressure 110 PSI / 7.5 bar
- Power 75 HP / 55 kW
- Quantity 1

Air Receiver

- Capacity 400 Gal. / 1.5 m^3

No. 8 Deck

Advancing tail piece

HV Cable Tray

- Capacity 985ft; 300m

Booster Fans

- Min. Air Speed 100 ft/min (0.5m/s)
- Flow 25,000 CFM
- Duct Diameter 24” / 700 m

No. 9 Deck

Hose Reel (Water system)

- Hose Type Hose DN 100
- Capacity 80 ft / 25 m
- Quantity 3

Hose Reel (grout, liquid A)

- Hose Type Hose DN 50
- Capacity 80 ft / 25 m
- Quantity 1

Duct Extender

- Duct Diameter 60” / 1,542 mm
- Storage Capacity 20 ft
- Quantity 1

The Robbins Company - 29100 Hall Street, Solon, OH 44139 USA T: +1-440-248-3303 F: +1-440-248-1702
Solon, OH ● Kent, WA ● Oak Hill, WV ● China ● India ● Germany ● China ● Italy ● Mexico ● Hong Kong ● Romania

Others

Segment Feeder
- Storage Capacity 6 Segments

Proof Drilling platform
- Mounted on bridge to allow manual proof drilling while boring. Located within 20' of the tailshield.

Segment Hoist
- Capacity 3 ton / 25 kN
- Quantity 2

Belt Conveyor
- Belt width 36" / 900 mm
- Length 160'
- Speed 400 ft/min; 2 m/s
- Capacity 378 ft^3/min; 600 m^3/h
- Power 40 HP / 30 kW
- Belt scale 2 Scale type
- Volume meas. Laser type

Safety Device
- Number of Gas Detectors
- CH_4 Detectors 2 pcs
- CO, CO^2, O^2, SO^4 Detectors 2 pcs (in shield and the Back-up)
- Hand Fire Extinguishing 3 (in shield) + 9 (in BU) sets
- Communication system
- CCTV system

Invert Cleanup system
Automatic Fire supression system
Tail clearance measurement system
Rapid segment unloaders
Probe drill (Erector mount, removable, 150ft probe capacity)

The Robbins Company - 29100 Hall Street, Solon, OH 44139 USA T: +1-440-248-3303 F: +1-440-248-1702
Solon, OH ● Kent, WA ● Oak Hill, WV ● China ● India ● Germany ● China ● Italy ● Mexico ● Hong Kong ● Romania

MODEL EPB2016-376/377
SECTION 1 • Description

1. INTRODUCTION
2. GENERAL ASSEMBLY
3. CUTTERHEAD ASSEMBLY
4. MAIN BEARING & SEAL ASSEMBLY
5. FORWARD SHIELD ASSEMBLY
6. MAIN DRIVE ASSEMBLY
7. REAR SHIELD ASSEMBLY
8. SCREW CONVEYOR ASSEMBLY
9. SEGMENT ERECTOR ASSEMBLY
10. OPERATOR'S STATION ASSEMBLY

1 Introduction

This section of the manual provides a description of major structural components and assemblies, operating systems, and auxiliary equipment of the tunnel boring machine.

Sections 4 through 19 contain all assembly, subassembly, component, and installation drawings that make up the machines. In addition, service and parts information is also contained in these sections. While reading the following descriptions, refer to the referenced sections and drawings to provide a more complete understanding of the machine and its operating systems.

2 General Assembly

The EPB & TBM assembly drawing and General Assembly drawing is located in Section 4. The drawings indicates all major assemblies and operational systems with references to applicable The Robbins Company Engineering detail drawings. Section 4 also includes a weights and dimensions drawing.

3 Cutterhead Assembly

The cutterhead assembly Section 5 is the assembly that accomplishes the cutting of the face. The cutterhead assembly is mounted to the main bearing assembly. Five 3 phase, 690 volts, VFD driven electric motors provide drive torque for the cutterhead assembly each delivering 210 kW. These motors, driving through gear reducer assemblies into a main ring gear (bull gear), which is attached to the cutterhead, rotate the cutterhead from 0 to 4.5 rpm in both directions.

The cutterhead assembly is the mounting structure for the soft ground cutting tools, injection ports, mixing bars, and the cutter assemblies, having a total of 40 replaceable cutter rings, used on this machine during normal operation. The 16 cutter rings located at the center of the cutterhead are mounted on a quad pedestal. The remaining 24 cutter rings are mounted in individual housings.

The individual cutter rings are numbered radially from the center outwards from number 1 through number 40. Cutters numbered 30 through 40 are commonly referred to as gage cutters; however, cutter numbers 39 and 40, being the furthest outboard, are actually providing the final sizing, or gauging, of the bore of the tunnel.

All cutter assemblies are replaceable from the back side of the cutterhead assembly.

Each cutter ring describes an individual radial pattern as the cutterhead rotates through a complete revolution. The cutterhead assembly also provides a mounting base for seven

foam spray injection ports and one wear detector bit and associated plumbing used with the foam spray system.

3.1 Cutter Assemblies

There are two types of cutters used on this machine, namely, center, face/gage cutter assemblies, or hub and shaft assemblies, as they are called on their assembly drawings. Center cutter assemblies use replaceable 17" (431.8 mm) cutter rings, and are of the twin-disc type, in order to keep ring spacing to a minimum at the center of the cutterhead. The face and gage cutter assemblies use replaceable 17" (431.8 mm) cutter rings. Cutter positions 9 through 40 uses single disc assemblies. The gage cutters, that cut the final bore of the tunnel, are configured for easy installation and removal, due to their proximity with the tunnel wall.

Procedures for determining cutter loading, as well as recommended limits are included in Section 2, Operation. Procedures for checking cutter ring wear, limits of wear, and cutter assembly installation procedures are included in Section 3, Maintenance. Procedures for inspection and re-building of cutter assemblies are included in Section 5, Cutterhead Assembly.

3.2 Cutting tools

Each cutting tool scribes an individual radial pattern as the cutterhead travels through a revolution. The cutting tools serve a dual purpose of cutting the tunnel face, and protecting the base structure from excessive wear. Cutting tools are spaced to achieve maximum penetration, while avoiding clogging and excessive wear.

3.2-1 Scraper Bit

Scraper bits are mounted on the side of the cutterhead spokes. These bits are used primarily to scrape the excavation face and direct the material into the mixing chamber.

3.2-2 Side Protection Bits

Side protection bits are located on the outside ring surface, and pilot bits are located on the front face of the cutterhead. These are used to minimize the wear on the cutterhead structure.

3.2-3 Injection Port Protection Bit

Injection port protection bits are located over injection ports. These bits protect the injection ports from damage.

3.2-4 Wear Detection Bit

One wear detector bit is located on the front face of the cutterhead. This bit has a hydraulic passage that ends 18mm below the tip of the cutting bit. This passage is pressurized from the hydraulic system, and includes a pressure sensor for monitoring purposes.

When the bit wears 18mm, the passage will be ruptured, spilling hydraulic oil, and causing a loss of pressure. The pressure loss is detected from the pressure sensor and a warning is displayed on the operators screen.

3-2.5 Copy Cutter

The copy cutter is essentially a cutting tool mounted to a hydraulic cylinder, which can extend/retract from -20mm to 130mm relative to the outside of the shield body. The copy cutter can be used prior to articulation to help the machine make steering adjustments. Copy cutter should never be used in hard ground, rock, or in the presence of boulders. Operation of the copy cutter is discussed in section 2.

3.3 Injection Ports

Injection ports are located on the front face of the cutterhead to allow injection of foam & additives for ground conditioning purposes.

3.4 Rotary Union

The rotary union allows passage of fluids from the inside of the machine to the rotating cutterhead. This is equipped to handle fluids for all injection ports, copy cutter, and wear detection bit.

3.5 Mixing Bars

The cutterhead has mixing bars protruding from the back side to help mix any foam & additives into the excavated material.

4 Main Bearing and Seal Assembly

The main bearing and seal assembly Section 6 consists of the main thrust bearing, main drive ring gear, and inner and outer seal assemblies (the inner and outer seal assemblies are used to seal the bearing and gear cavities against loss of lubricating oil, and to prevent introduction of muck into the bearing cavity).

The main bearing assembly is a tri-axis bearing that accepts both radical and thrust loading of the cutterhead assembly. The bearing consists of three rows of cylindrical rollers that are held together by bearing raceways.

The ring gear is integral to the main bearing outer raceway. The main bearing/gear is mounted to the cutterhead support with bolts.

The seal assembly consists of four inner and four outer seals. The outer seals are stationary, while the inner seals rotate. Both the inner and outer seal assemblies are installed in a specific order (refer to drawings). This order of installation is done to avoid damaging the seal assemblies.

The seals are lubricated with a combination of greases and lubricants, and are oriented so the lips prevent entrance of contaminants into the cavities. There is space left between the seals, which serves to port grease to the seals.

Lubrication for the main bearing and ring gear is provided by the lubrication system, and is pumped to the components through porting in the structure.

5 Forward Shield Assembly

The Forward Shield Assembly Section 7 is the primary support structure of the machine, which allows mounting the cutterhead assembly and the mounting base for the main drive assemblies, and a machined and drilled structure for mounting of the main bearing assembly. This component also includes provisions for mounting of the screw conveyor, man lock, earth pressure sensors, and additional injection ports. The forward shield is completely sealed in order to resist earth pressure, and water pressure. Thrust is transmitted to the forward shield through direct contact with the rear shield, or through the articulation cylinders (section 9).

5.1 Earth pressure sensors

Earth pressure sensors are located on the front bulkhead of the forward shield. These sensors are used by the operator to maintain the correct earth pressure when the machine is excavating.

5.2 Injection ports

Injection ports are located on the front bulkhead, and on the outer circumference of the shield body. These ports can be used for a variety of ground conditioning purposes.

5.3 Man lock

The man lock is mounted in the top section of the forward shield. The man lock allows pressurization and de-pressurization of personnel and equipment required for maintenance inside the pressurized cutting chamber. Access doors are located on the center bulkhead and on the back of the man lock to provide access into the man lock.

6 Main Drive Assembly

The main drive assembly Section 8 is mounted into the forward shield assembly and secured in place using hex head cap screws. The machine is equipped with five main drive assemblies, each powered by a 210 kW, 690-volt, 3-phase, 50Hz, VFD driven electric motor. For reference purposes, with respect to the electrical system schematic, drive position 1 is installed in the top right-hand position and numbering is clockwise around the cutterhead support. Slot position numbers 1, 7, and 8 do not have a motor mounted.

6.1 Gear Reducers

The gear reducers are planetary-type; three stage reduction that provides an overall ratio of 104.7:1. The output pinions of the gear reducer drive into the common main ring gear.

Each gear reducer is equipped with oil fill and drain ports. Recommendations for the lubricants, as well as intervals of service are in the manufacturer's literature, included in Section 8.

6.2 Drive Motors

Each of the cutterhead drive motors, as previously mentioned, is 210 kW, and is water cooled. The temperature sensing elements operate at 180º C (356º F) shutting down the drive motors.

Each motor is equipped with grease fittings and grease relief ports to allow periodic re-lubrication of shaft support bearings. Recommendations for the lubricants, as well as intervals of service are in the manufacturer's literature, included in Section 8.

6-3 Torque Limiting Coupling

All six of the machine's motors are equipped with a torque limiting coupling attached to them. The coupling provides a solid connection between the rotor shaft and the torsion shaft of the electric motor as long as the transmitted torque does not exceed a predetermined value. When this value is exceeded, the coupling will slip immediately.

Once the cause of the overload had been removed, the coupling can be reset to provide a solid connection again.

NOTE:
The model STB-90 has a range of slip-torques, they must be set for each motor. The coupling must be set at 78 MPa hydraulic pressure, which corresponds to a slip-torque of 6900 Nm. The procedure for setting the correct pressure and oil level is described in the manufacturer's instructions; it is included in Section 8.

To reset the coupling after it has slipped from overloading, a new one must replace the dump valve and the sleeve must be re-pressurized with the hand pump.

Perform the steps exactly as it was done during the original assembly. One access cover is provided to permit servicing of the coupling without disassembling the drive unit.

If it becomes necessary to remove the torque limiting coupling from the rotor shaft, the oil must first be drained by loosening the dump valve 1/4 turn. Next, heat the coupling's hub by the careful application of wide acetylene/oxygen or propane flame. Subsequently, remove the coupling with the supplied special puller, the legs of which are placed in notches machined in the front face of the hub. Too high or uneven heating of the hub may damage the seals; rotate the coupling while heating the hub.

7 Rear Shield Assembly

The rear shield is the main mounting structure for the thrust cylinders, articulation cylinders, and articulation seals. The rear shield transmits thrust force from the thrust cylinders to the forward shield by direct contact, or through the articulation cylinders. The rear shield is connected to the forward shield by a pinned connection that can react to torque, but still allow movement in and out for articulation purposes. The articulation seals are mounted to the rear shield, with the sealing surface located on the inside diameter of the forward shield.

These seals are designed to resist ground and water pressure with and without articulation movements. The rear shield assembly Section 9 includes stroke sensors, thrust shoes, tail seals, grout injection pipes, and rear support frame.

7.1 Thrust Cylinders

Sixteen thrust cylinders are provided. Each cylinder has a thrust shoe attached to the rod end of the cylinder, which reacts against the tunnel lining segments. The cylinders are mounted through holes in the rear shield, held in place at the aft end by socket head cap screws. The piston rods extend aft and have two functions:

1. They provide main thrust force necessary for propelling the machine forward, and resisting the force from pressurized ground acting on the front of the machine.

2. They serve to force the associated segments into proper position and hold them in place as the complete ring of segments is installed.

7.2 Articulation Cylinders

A total of ten articulation cylinders are mounted between the forward shield and the rear shield. These double-acting hydraulic cylinders allow the articulation between these shield assemblies.

7.3 Stroke sensors

Eight stroke sensors are provided; four for articulation and four for thrust. Each of these cylinders sends an electric signal to the PLC. These signals are used to calculate the position of both shields for use by the guidance system. The signals are also used to limit the angle of articulation to an acceptable range.

7.4 Tail seals

Three rows of wire brush tail seals are located at the aft end of the rear shield to provide sealing against earth, water, and grout between the outside of the segment lining and the inside of the shield. Grease injection ports are located in the shield structure to allow the injection of grease to the cavities between rows of tail seals. Grease injection directly affects the sealing performance of the tail seals. Drawings for the tail seal grease system are located in section 13 of this manual.

7.5 Grout injection pipes

Grout injection pipes are built into the structure of the rear shield. These passages allow grout to flow out of the aft end of the machine where the segment ring is being pushed out of the rear shield. Each injection location has a spare passage in case the primary passage is blocked. All passages have covers that can be removed for cleaning purposes.

8 Screw Conveyor Assembly

The primary purpose of the screw conveyor is to discharge material while maintaining pressure inside the cutting chamber. The shaft type screw is driven by a hydraulic drive unit located at the aft end. The main structure of the screw conveyor consists of several casings that mount in series to transport muck from the bulkhead gate at the front, to the discharge gate at the aft end. An intermediate support rod is used to transmit the load of the screw conveyor to the forward shield. The screw conveyor assembly Section 10 includes the screw, screw drive unit, and screw gates.

8.1 Bulkhead Gate

The bulkhead gate must always be open during all excavation operations. In an emergency situation, the bulkhead may be closed to isolate the screw conveyor and the rest of the machine from the pressurized earth and water inside the cutting chamber. In order to close the bulkhead gate, the screw slide cylinders must be extended to move the screw out of the way of the bulkhead gate.

8.2 Screw Gate

The screw gate can be used as an additional sealing barrier against pressurized ground and water, or as a tool to regulate the ground pressure in the cutting chamber.
The percentage that the gate is open is detected by a stroke sensor in one of the cylinders, and is shown on the operation panel.

8.3 Screw Conveyor Drive Unit

This unit is located at the aft of the screw conveyor. The screw drive unit consists of two hydraulic motors, pinions, ring gear, and bearings. The shaft type screw is connected directly to the output shaft of the drive unit to transmit torque from the hydraulic motors.

9 Segment Erector Assembly

The segment erector Section 11 furnished with this machine consists of the rotating erector frame, an erector drive system for radial positioning, and hydraulic cylinders for lateral positioning, lifting and lowering, and for slight adjustment of the segments. The erector is connected to the machine by the rotating frame supported on roller assemblies.

9.1 Rotating Frame

The erector rotating frame provides the rotating mounting structure for the rest of the erector structure and cylinders.

The outside of the frame is smooth so that it can easily rotate on the roller assemblies, while the inside has a gear profile that meshes with the drive assemblies. The rotating frame has two cylindrical guide tubes that allow the erector arm to slide in and out in a radial direction.

9.2 Erector Arm

The erector arm structure has two cylindrical tubes that allow it to travel in a radial direction relative to the rotating frame. These two tubes slide inside of the cylindrical guide tubes on the rotating frame. The erector arm also has two additional cylindrical tubes in the horizontal position that allow the grip assembly to slide fore and aft.

9.3 Erector Grip Assembly

The erector grip assembly has two cylindrical guide tubes to allow the erector grip to slide fore and aft along the inner cylindrical tubes on the erector arm. The grip assembly has a locking mechanism to connect to a lifting ball that is inserted into the segment.

9.4 Erector Drive Assemblies

The three erector drive assemblies are powered by hydraulic motors that are coupled to pinions which drive the rotating frame. The motors have internal brakes that require hydraulic pressure to release; therefore, they are locked whenever the erector is not being rotated.

9.5 Lift Cylinders

There are two hydraulic cylinders one on each side of the erector, used for lifting the segments and placing them against the tunnel wall. These cylinders are guided by the cylindrical guide tubes on the rotating frame, and the inner cylindrical tubes on the erector arm. These cylinders are equipped with counterbalance valves in both the rod end and the cap end.

9.6 Axial Positioning Cylinder

This cylinder is connected between the erector arm and the erector grip assembly, and is used to move the grip assembly fore and aft. These cylinders are guided by the cylindrical guide tubes on the grip assembly, and the inner cylindrical tubes on the erector arm.

9.7 Support cylinders

Four support cylinders are used to make slight adjustments to the segment position.

9.8 Rear scaffolding assembly

The rear scaffolding assembly includes platforms to assist personnel in the erection of segment rings, as well as provide a mechanical link and walkway from the machine to the backup.

10 Operator's Station Assembly

The operator’s station assembly Section 12 consists of all controls and indicators necessary to operate and monitor the various hydraulic and electrical functions of the machine during normal boring.

This includes all the controls for the various hydraulic actuators and electric motors; controls for setting propel speed and pressure, and pressure gauges, ammeters, indicator lights for monitoring the systems, and the operator panel.

MODEL EPB2016-376/377
SECTION 2 • Operation

(Operation section is from a previous machine, and is for reference only)

1. INTRODUCTION 1

2. MACHINE ASSEMBLY, TRANSPORT & CHECKOUT 1

3. CONTROL & INDICATORS 1

4. TBM OPERATION 27

- 4.1 TBM OPERATING SEQUENCE 27
- 4.2 OPERATING THE HYDRAULIC SYSTEM 30
- 4.3 OPERATING THE THRUST CYLINDERS 31
- 4.4 GREASE\EXCLUDER GREASE LUBRICATION 34
- 4.5 AUTOMATIC OIL LUBRICATION 35
- 4.6 OPERATING THE CUTTERHEAD 35
- 4.7 OPERATING THE SCREW CONVEYOR 39
- 4.8 ERECTOR OPERATION 42
- 4.9 ARTICULATION OPERATION 43
- 4.10 TAIL GREASE OPERATION 48
- 4.11 WATER SYSTEM OPERATION 48

1 Introduction

Before attempting to operate this machine, the operator should be thoroughly familiar with the machine systems, the functions of the various actuators, the controls and monitoring devices, and the safety instructions. All warnings in the Safety Considerations Section at the beginning of the manual as well as in this section should be adhered to strictly. Section 1, Description, contains detailed information on the various assemblies and systems that make up the complete machine. The operator should refer to this section for additional information on any topics that are not familiar, as well as to the relevant schematics and drawings that are included in Sections 4 through 19.

2 Machine Assembly, Transport, and Checkout

The methods used for assembling the machine, moving it to the starting point of the tunnel, and preparing a starting chamber will depend on the configuration of the site and the equipment available. Before beginning to bore the tunnel, the machine should be inspected and all systems tested, as advised by Robbins field service personnel.

3 Controls and Indicators

Most TBM functions, and some backup decks functions, are monitored and controlled at the Operator Console located in the Operator Cabin. The electrical control system for this TBM uses a Programmable Logic Controller (PLC). A PLC is an industrial computer well suited to service a large number of inputs and outputs.

Inputs consist of operator-activated switches, pressure switches, limit switches, level switches, temperature switches, pressure transducers, and position transducers. Outputs consist of solenoid valves, indicator lamps, relays, motor starters, meters, and alarm horns.

The PLC is located in the Operator Cabin in an enclosure called the PLC Cabinet. The PLC consists of a number of electronic modules plugged into racks. These modules include power supplies, the CPU, input and output cards, and communication cards. In order to greatly reduce the amount of wiring to input and outputs located in dispersed areas of the TBM and backup decks, there are a number of remote I/O modules.

These modules locally service inputs and outputs, and communicate with the PLC via a high speed cable network.

Thus, two twisted pairs of wires of the cable network replace hundreds of wires that would normally be needed to bring signals from input and output devices to the PLC. Remote I/O modules are located in the Hydraulic Power Unit Cabinet, the Main Electrical Cabinet, and the two VFD cabinets.

The PLC runs a program written specifically for this TBM. The program is written in a language known as Ladder Logic.

This program is designed to examine the inputs and then make a decision as to which outputs are to be activated. For instance, the operator may press the button to start a pump. The PLC will see that this button has been pressed.

However, before the PLC commands the pump motor starter to energize, it will first examine some other inputs to see if it is ok to start the pump. These checks are known as “interlocks” and may consist of examining that the circuit breaker is not tripped, that the motor overload relay is not tripped, and that there is sufficient hydraulic oil in the reservoir. Only if all of these interlocks are satisfied will the PLC energize the pump motor starter.

3.1 Operator Control Panel Display

Located in the Operator Console is a video display unit. The operator’s display unit is often mistakenly thought of as the primary controller of the TBM. In reality, the display unit is simply another I/O device as far as the PLC is concerned. The unit displays a number of buttons on a number of screens. The operator can touch a button to request that a given machine operation take place.

The buttons change color and display operational status as various machine operations take place. The unit also displays useful information concerning the machine operation. These displays include ammeters, stroke position, advance rate, and status indications. Due to the large number of operations and displays required and the limited amount of area on the video display, the operator’s display unit is structured in a number of different pages.

The operator can easily jump from page to page with the press of a button. The pages are logically arranged to each show a different area of machine control. The following sections of this document consider each page of the operator’s display unit.

Note:

There is one very important safety interlock system that must be cleared before any machine operations can be performed. This is the E-stop interlock system. Any E-stop button that is activated on the TBM will both electronically disable the PLC and will mechanically drop out all of the relays that supply power to the outputs.

To clear the E-stop interlock system, first confirm that all of the E-stop buttons on the machine are in the normal run position. Then press the “Reset” button.

Most operator controls and indicators are located in the operator's control station, inside the operator's cab. For specialized functions, the controls are located at the relevant area of the machine.

3.2 Operator's Display Control Pages

Each of the operational screen pages is shown and described below. The interlock and status pages provide information only and are not designed to accommodate operator input.

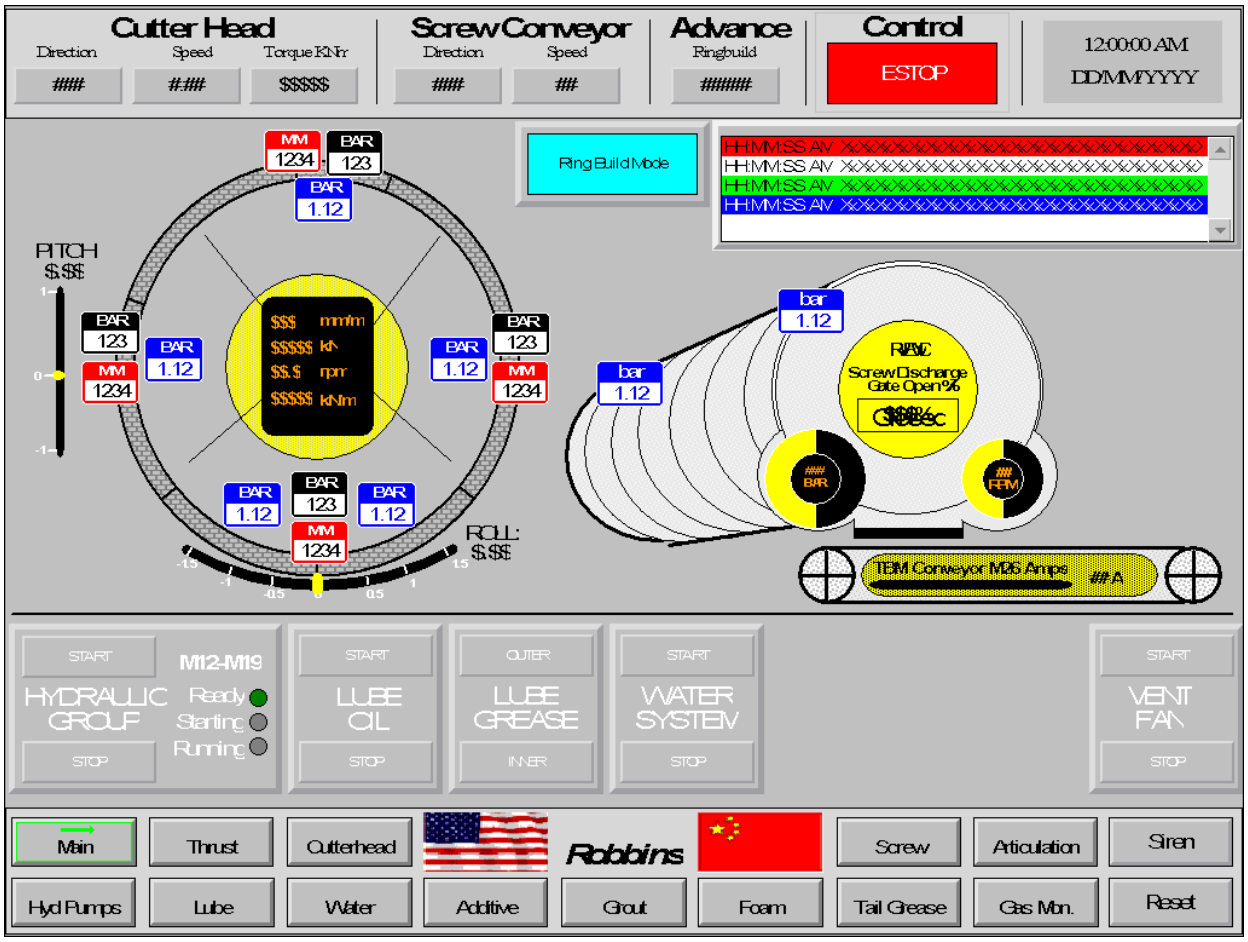

Figure 2.1 Operator's Panel Control – Main Boring Page

3.2-1 Control Panel - Main Page

The operator usually selects this page when the TBM is boring. It displays useful information related to the boring operation. Many functions can also be controlled by this page, but the settings need to be selected on each systems control page.

Reset Template
This template will display "Ready to Reset" provided the E-stop interlocks are clear and there are no PLC faults, the Operator Console key is inserted and turned to the right. When Reset is pressed, the button will turn green and indicate "Enabled". This template is also located on the individual system control pages.

Siren Template
The operator sounds the siren from this template. This template is also located on the individual system control pages.

Cutter Head Template
This template displays the cutter head status. Cutter head can be started/stopped from this template. When the start button is pressed the cutter head will turn in the direction and speed selected on the cutter head page. The rotation direction, speed and torque will be displayed on the upper left section of the screen. If there is a fault, the template turns red and displays an alarm message on the alarm list.

Screw Conveyor Template
This template displays the screw conveyor unit status. Operator can start or stop the screw conveyor operation from this template. The screw conveyor will only operate when the following systems are on ENABLE status: Screw Conveyor Hydraulic Pump Motors, Grease System and when the following conditions are met: Bulkhead Gate Open, Screw Ribbon extended and all pressure alarms not active. If there is a fault, the template turns red and displays an alarm message on the alarm list.

Water System Template
The Water System template displays the water system status. Operator can start or stop the operation of the water system that includes the TBM water and the dewatering system. The water system can be enabling without the console being active. If there is a fault, the template turns red and displays an alarm message on the alarm list.

Lube Grease System Template
This template displays the Lube Grease unit status. Operator can start or stop the operation of the grease system from this template. If there is a fault template turns red and displays an alarm message on the alarm list.

Lube Oil System Template
The Lube Oil template displays the lube system status. Operator can start or stop the operation of this system. The System will start automatically when Cutter Head Drive starts. If there is a fault, template turns red. Lube Oil System will also shut down 10 Sec after Cutter Head Drive stops.

Hydraulic Group Template
This template displays the hydraulic group status. Operator can start or stop the screw conveyors, and thrust cylinders hydraulic power units using this template. Hydraulics power units will start in sequence with interval of 3 sec. This template will turn green and will display “Running” when the screw conveyor and thrust cylinders power units are operating and ready to work. If there is a fault, the template turns red and an alarm message will be displayed on the alarm display.

Ventilation Fan Template
The operator can start or stop the ventilation fan motor M27 using this template.

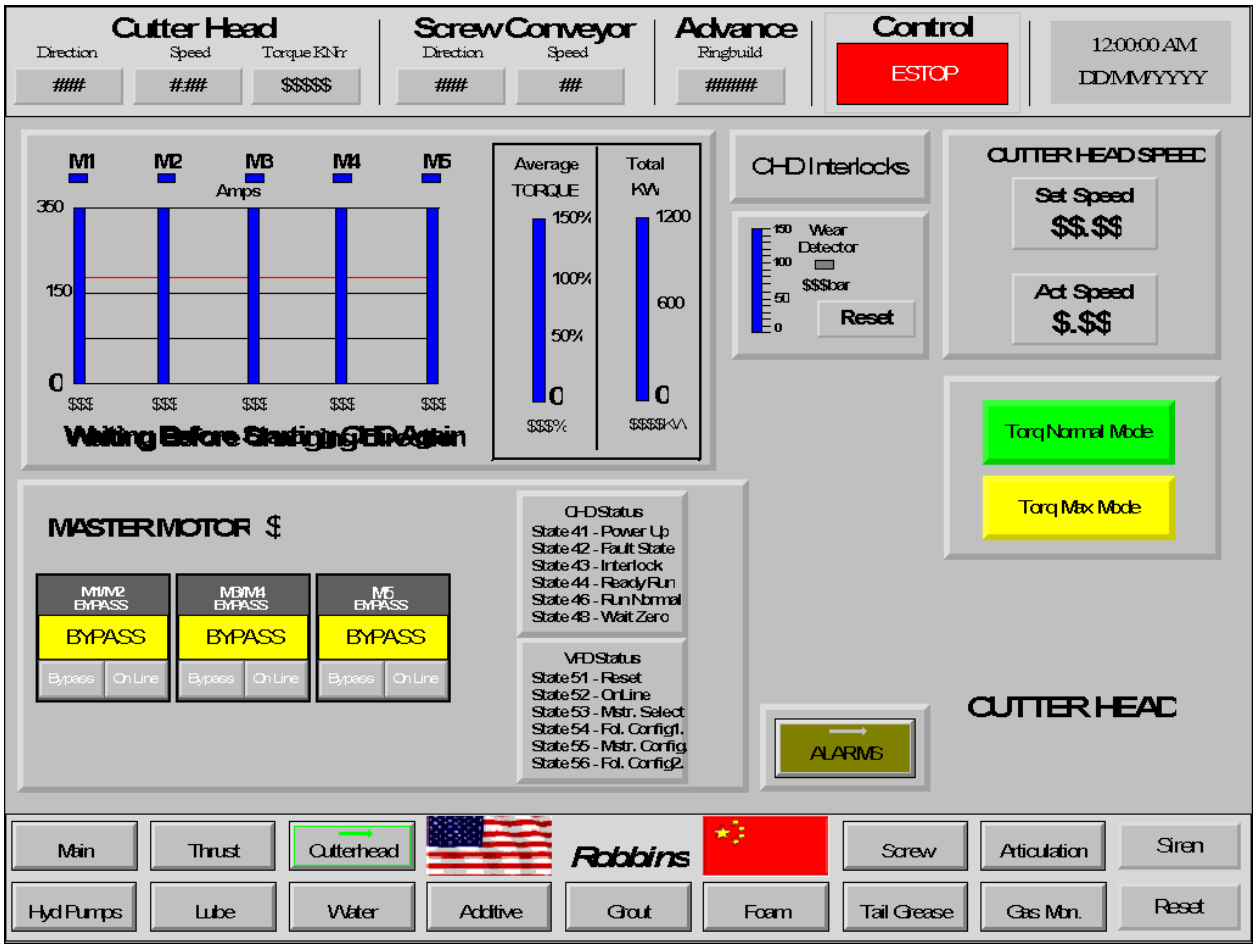

Figure 2.2 Operator's Panel Control – Cutter Head Drive Page

3.2-2 Control Panel - Cutter Head Page

The operator can use this screen to monitor and change the status (On Line/Bypass) of each Variable Frequency Drive (VFD), or start and stop the Cutter Head motors, it displays values as Current levels in (Amps), Average Torque delivered in %, Total power in KW. This screen also includes the following features described on the Panel Main Screen like, **Reset Template, Siren Template, Cutter Head Start Template** along with this features it also displays Cutter Head Direction, Speed, Torque, Screw Conveyor Direction and Speed, Advance Ring Build, Alarm Screen, and Wear Detector display.

Cutter Head Start Template
Please see previous definition of this template on the main page.

On Line Template
This template allows the operator to enable each drive motor individually. When the On Line template is pressed the ON-LINE template turns green and the drive motor is ready to start.

Bypass Template
This template allows the operator to disable each drive motor individually.

Torque Normal Template
This template allows the operator to select the Normal Torque Option, which allows each motor to deliver up to 100% of the normal torque, which should be used under normal boring conditions.

Torque Max Template
This template allows the operator to select the Maximum Torque Option that allows each motor to deliver up to 130% of the normal torque, which should only be used under special boring conditions.

Wear Detector Template
This template displays the pressure in the wear detector circuit, and allows the operator to reset the alarm if the wear detector bit is replaced after being ruptured.

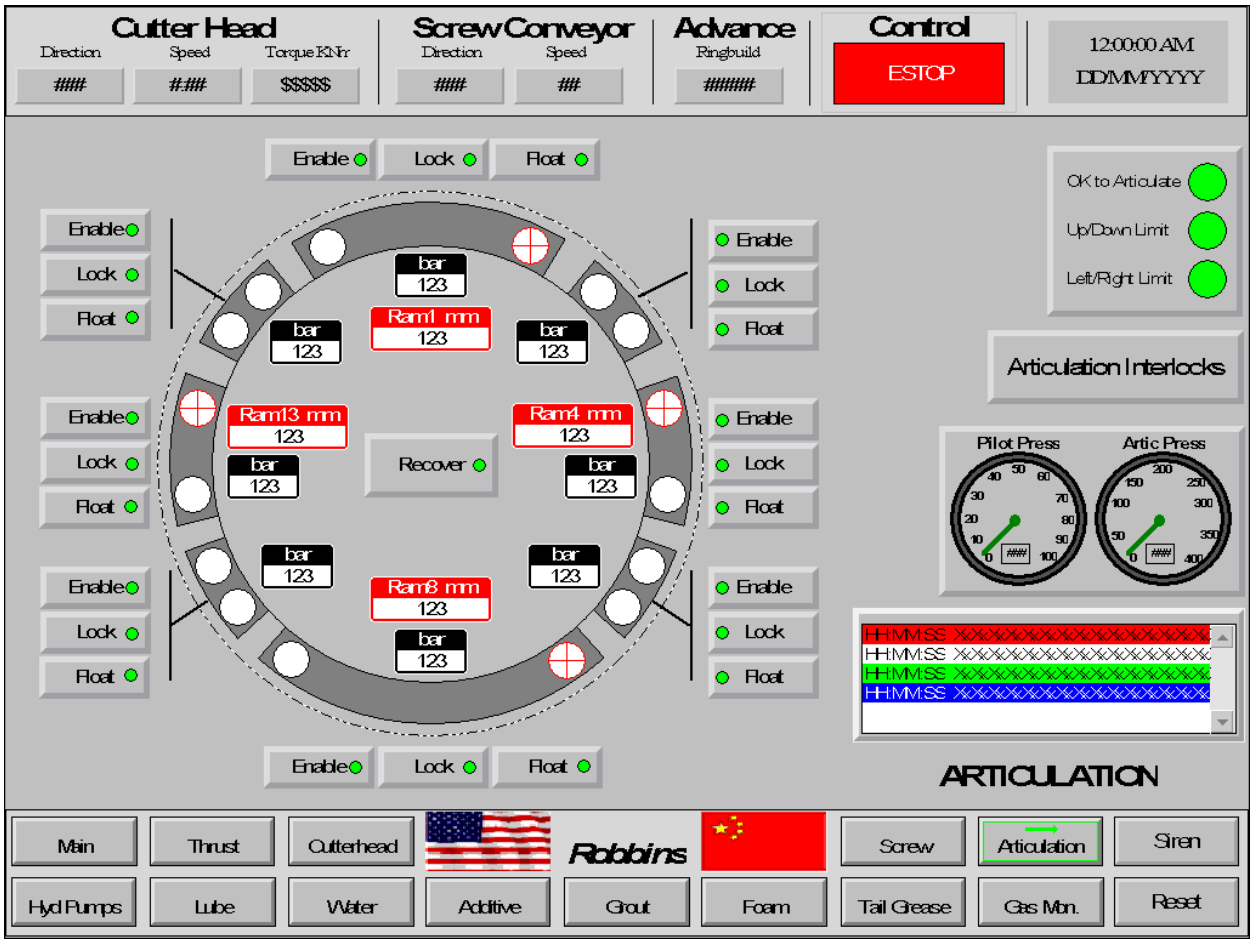

Figure 2.3 Operator's Panel Control – Articulation Page

3.2-3 Control Panel - Articulation Page

The operator can use this screen to control the settings of the articulation cylinders, which consist of 8 groups with two hydraulic articulation cylinders for each group for a total of 16 hydraulic articulation cylinders.

On this screen the operator is able to monitor the following features described on the Panel Main Screen like, **Reset Template, Siren Template** along with this features it also displays Cutter Head Direction, Speed, Torque, Screw Conveyor Direction and Speed, Advance Ring Build and Hydraulic pressure for the articulation cylinders.

Enable Template
For each individual group this template will allow the operator to enable each individual group of Hydraulic Articulation Cylinders. When the enable template is pressed, the indicator on the template turns green and the Hydraulic articulation cylinder selected is ready to start.

Articulation Status Template
This template displays when the articulation limits have been reached, and when it is ok to articulate.

Lock Template
For each individual group this template will allow the operator to lock the selected group of articulation cylinders in the current position. When the lock template is pressed, the indicator on the template turns green and the Hydraulic articulation cylinder selected is locked in position.

Float Template
For each individual group this template will allow the operator to set the floating mode for each individual group of Hydraulic Articulation Cylinders. The float button is only enabled when the PLC displays “ok to articulate”. When the float button is pressed the indicator on the template turns green and the Hydraulic articulation cylinders selected are able to extend without resistance.

Recover Template
This template disables the enable/lock mode on all groups of Articulation cylinder; at the same time all non-locked cylinders go to float mode. Recovery procedures should be used when returning to normal operation after steering.

Interlock Override Template
This template will allow the operator to override all the articulate interlocks or any faulty conditions or operation restrictions for the articulation cylinder groups. Retraction of articulation cylinders is not normally allowed, however, in extreme circumstances this can be allowed by pressing the interlock override button.

Note: The articulation Cylinders system works independently from the thrust cylinders system, this system is not designed nor intended to substitute or assist the thrust cylinder system.

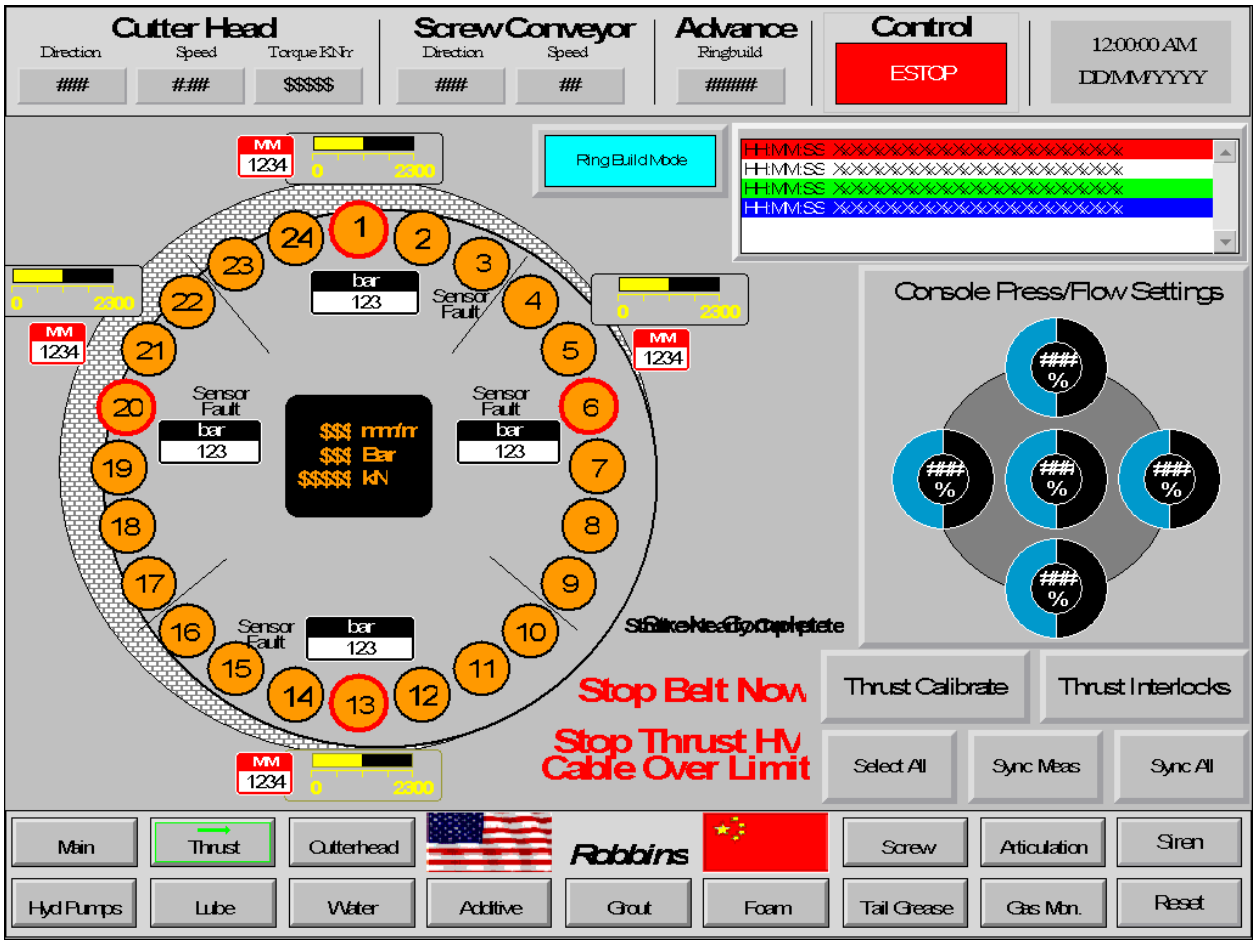

Figure 2.4 Operator's Panel Control – Thrust Cylinders Page

3.2-4 Control Panel - Thrust Cylinder Page

The operator uses this screen to monitor and change the operation mode and status of each individual thrust cylinder depending on the changing conditions that will be operated. Also included are the features already described on the Panel Main Screen like, **Reset Template, Siren Template,** along with this features it also displays, Cutter Head Direction, Speed, Torque, Screw Conveyor Direction and Speed, Advance Ring Build, Alarm Screen, and operation mode.

The thrust control cylinders can be operated from this screen or with the thrust control station. Both Locations must be set with their respective control selector switches to allow operation.

Thrust Cylinders Template
From this template the operator will be able to change the status and operation mode of each individual thrust cylinder. When pressed, the indicator turns green and cylinder is enabled for operation.

Thrust Bar Display Templates
These templates allow the operator to monitor pressures in Bars on each of the four thrust cylinder groups.

Millimeter Display Templates
The millimeters display templates will allow the operator to read in real time the linear position for thrust cylinders # 1,6,13 and 20.

Pump Pressure Template
This template displays the hydraulic pressure at the pump in bars.

Interlock Override Template
In emergency situations, the operator uses the interlock override button to allow high pressure in the thrust cylinder circuit when in ring build mode.

Force in kN Template
This template allows the operator to monitor the thrust force in kN.

Penetration Display Template
This template allows the operator to read the penetration rate or advance in millimeters per minute.

Flow Template
This template displays the % of maximum hydraulic oil flow that is going to the 4 cylinder groups.

Thrust Cylinder Calibration Template
Pressing this template will bring up a separate window for thrust cylinder stroke sensor calibration.

Select All Template
This template allows the operator to select all the thrust cylinders at the same time without having to select them individually.

Sync Measure Template
This template will allow the operator to Synchronize and extend all unselected thrust cylinders containing stroke sensors at a low pressure. This template is only enabled in excavation mode.

Sync All Template
This template will allow the operator to Synchronize and extend all unselected thrust cylinders in excavation mode at a low pressure. This template is only enabled in excavating mode.

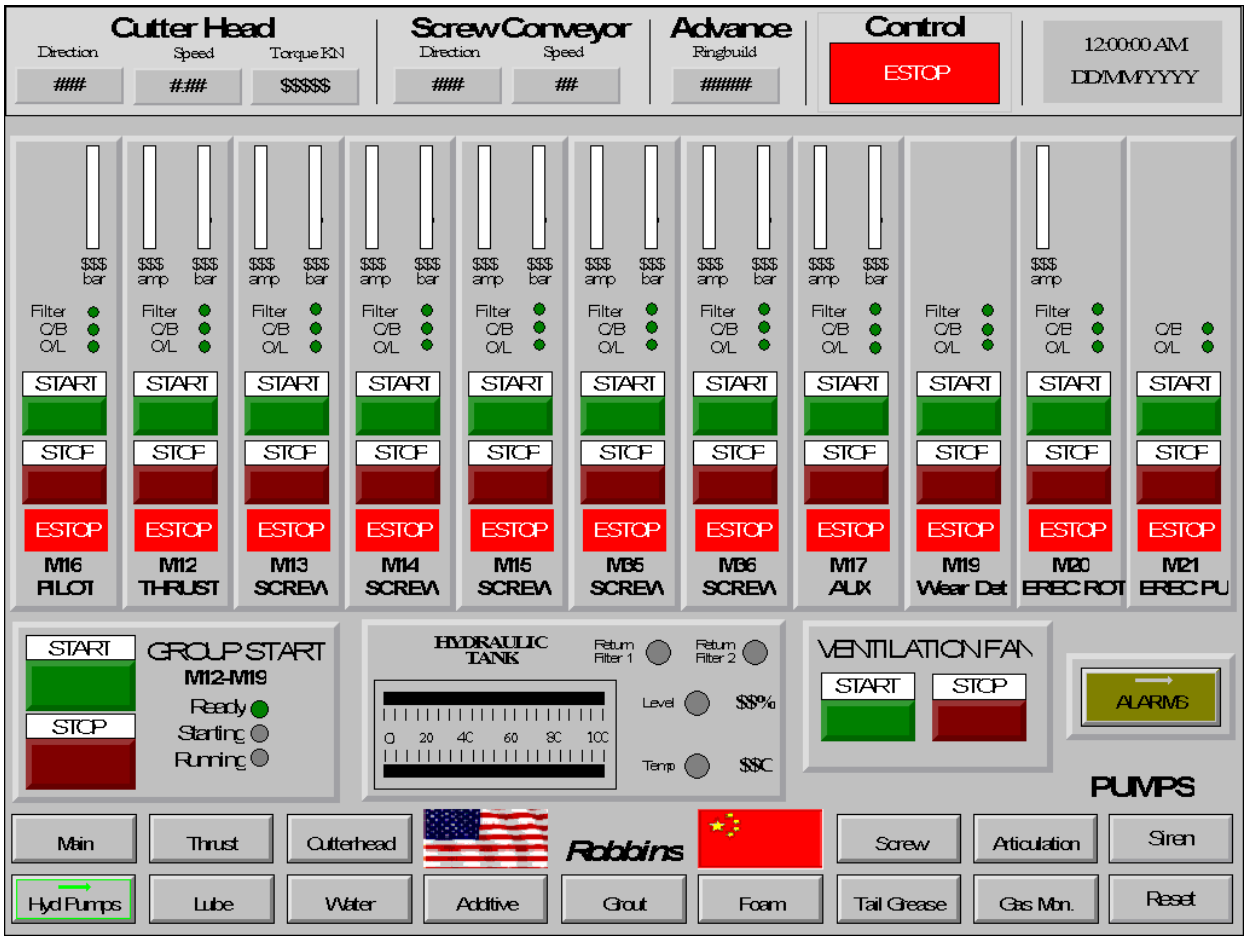

Figure 2.5 Operator's Panel Control – Hydraulic Pumps Page

3.2-5 Control Panel - Hydraulic Pumps Page

The operator uses this screen to monitor and change the status of each individual hydraulic system as required for operation. This screen also includes the following features described on the Panel Main Screen like, **Reset Template, Siren Template,** along with this features it also displays Cutter Head Direction, Speed, Torque, Screw Conveyor Direction and Speed, Advance Ring Build, Alarm Screen, and operation mode.

Panel Group Start Template

This template displays the Group Start unit status. Operator can start or stop the Thrust cylinders, Screw Conveyor and the thrust cylinders hydraulic system. These Hydraulics power units will start in sequence with interval of 3 seconds. This template will turn green and will display "Running" when the power units are operating and ready to work and will change the status to starting when the start bottom is pressed. If there is a fault, the template turns red and an alarm message will be displayed on the alarm display.

M12 through M17, M19 through M22 Template
All these templates work the same way and will start and stop each individual hydraulic or lube power unit by pressing the START bottom or will stop them if the STOP button is pressed. Each individual template monitors the current level in (AMPS), pressure, filter status; circuit breaker operation, over load condition and filter status.

Also displayed are Hydraulic oil reservoir temperature, oil level, filter condition for pump M11 and pump M18, which are the Hydraulic pumps for the accumulator or Kidney system.

Ventilation Fan Template
The operator can start or stop the ventilation fan motor M27 using this template.

Hydraulic Tank Template
This template displays the filter condition, tank level, and hydraulic oil temperature.

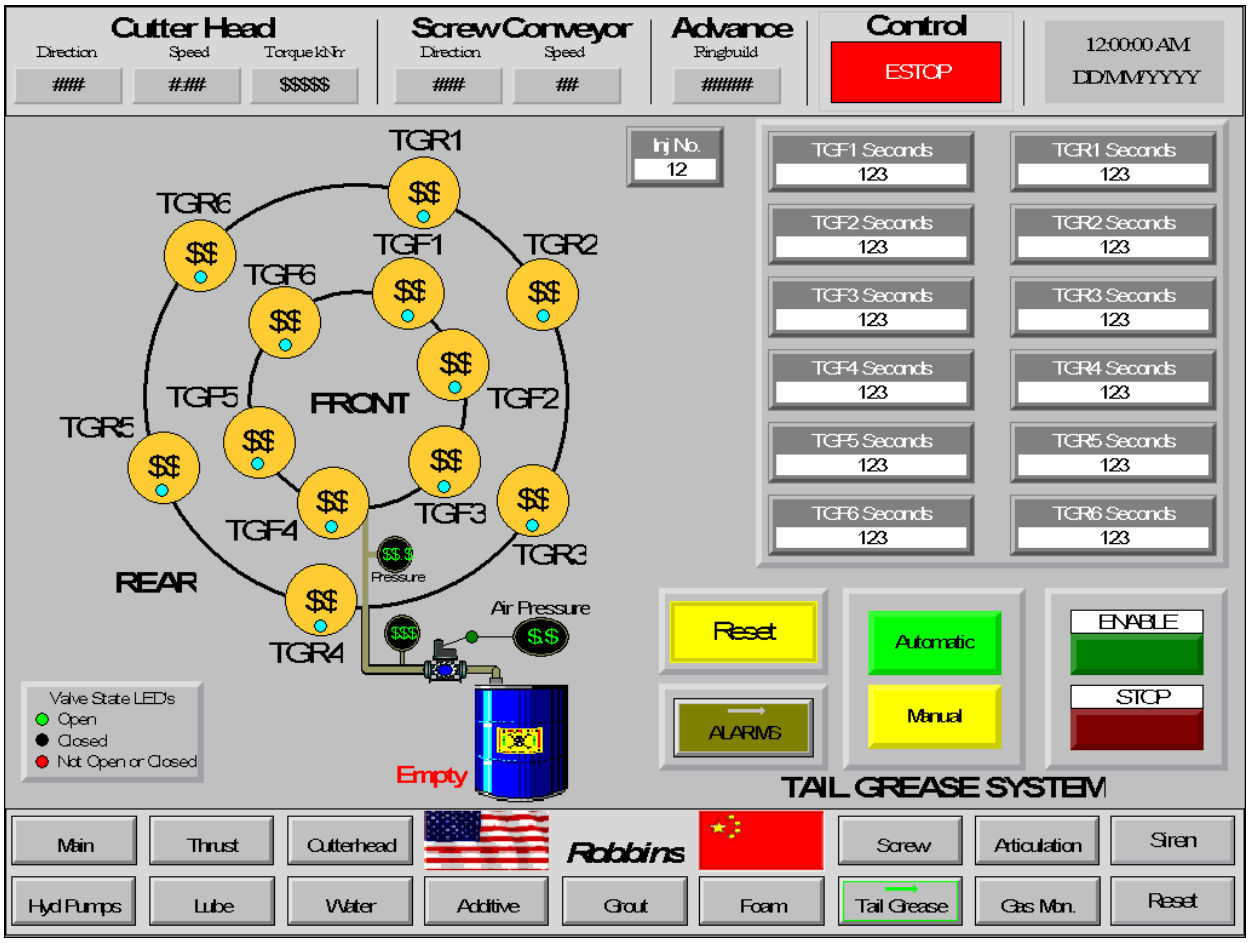

Figure 2.6 Operator's Panel Control – Tail Grease Page

3.2-6 Control Panel - Tail Grease Page

The operator uses this screen to monitor and change the status of the Tail Grease injection system on the rear Shield as required for operation. This screen also includes the following features described on the Panel Main Screen like, Reset Template, Siren Template, along with this features it also displays Cutter Head Direction, Speed, Torque, Screw Conveyor Direction and Speed, Advance Ring Build, Alarm Screen, and operation mode.

Reset Template
The operator first clears all of the values by pressing the reset Template. The operator then touches each valve on the display to set the activation order.

Tail Grease Templates
These templates allow the operator to select the locations for tail grease injection in manual mode. These templates also indicate the current injection port and allow the operator to select injection port sequence in automatic mode.

Injection Time Templates
The operator uses these templates to select the injection time for each port location in automatic mode.

Automatic/Manual Templates
The system can be set to start manually or automatic by pressing the Automatic or Manual templates.

Enable/Stop Templates
The grease pump can be set to start in Manual Mode or Automatic Mode by the operator.

- In Manual Mode, the operator selects the valve(s) for grease injection.

- In Automatic Mode, the valves are sequentially cycled per order and time settings from the TG Valve Parameter Setting screen.

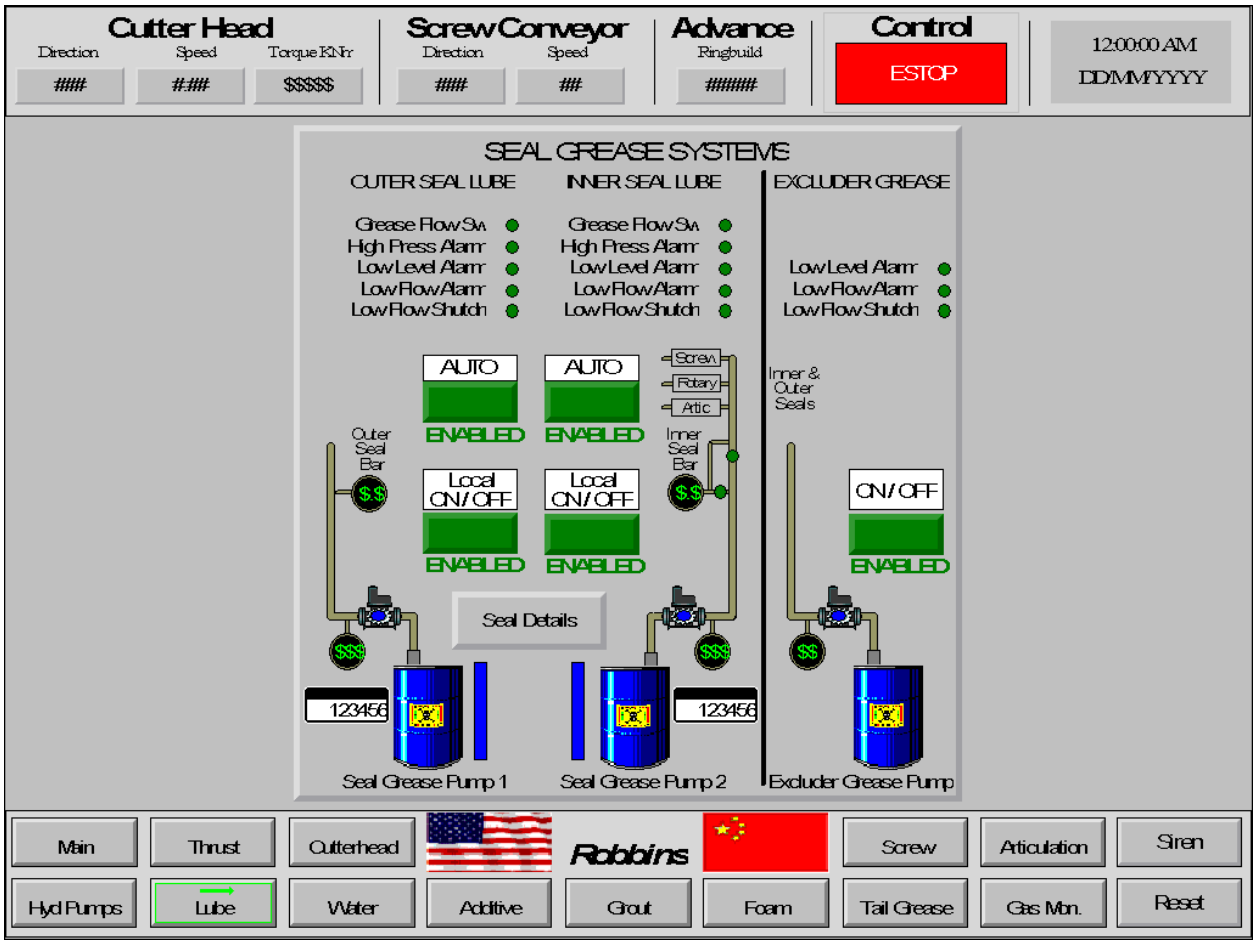

Figure 2.7 Lube System & Grease Control Page

3.2-7 Control Panel – Lube Control Templates

Seal Grease System Templates
The operator uses these templates to monitor the status of the seal grease system, as well as adjust the automatic/manual settings, and starting/stopping of the system.

Automatic Templates
The operator presses these buttons for the desired system to switch between automatic and manual mode.

Enable Templates
These templates are used to control grease injection when in manual mode. Grease injection is automatically started with the cutterhead in automatic mode. In automatic mode, the injection starts automatically with cutterhead rotation.

Seal Details Template

This template brings up a new window (shown below) showing the lube and grease pressures in each of the seal cavities.

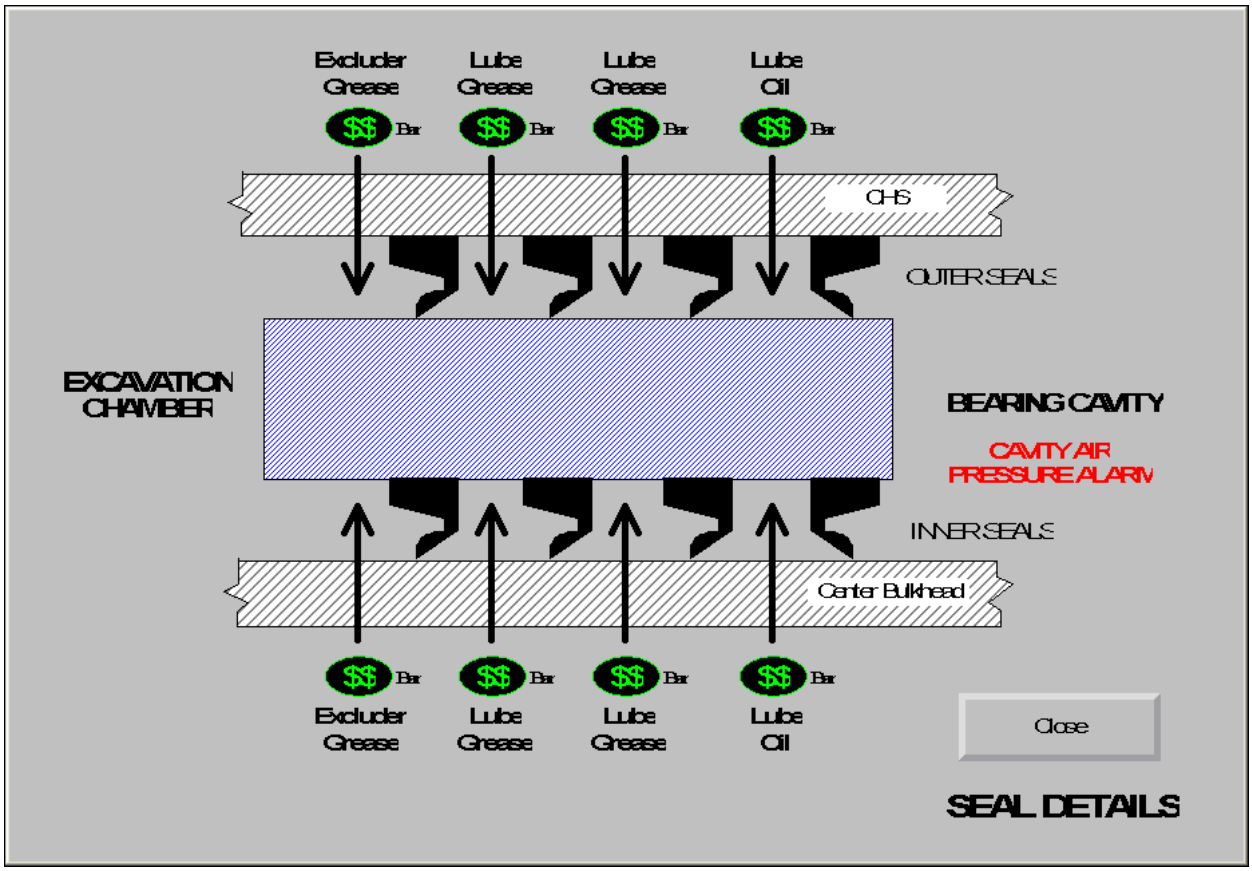

Seal Details

Grease pumps must be operating prior to cutterhead rotation (interlock).

Template indicators monitor the following for each lube and grease circuit:

Outer and Inner Seal Lube

- Grease Flow Switch
- High Pressure Alarm
- Low Level Alarm
- Low Flow Alarm
- Low Flow Shutdown

Excluder Grease

High Pressure Alarm
Low Level Alarm
Low Flow Alarm
Low Flow Shutdown

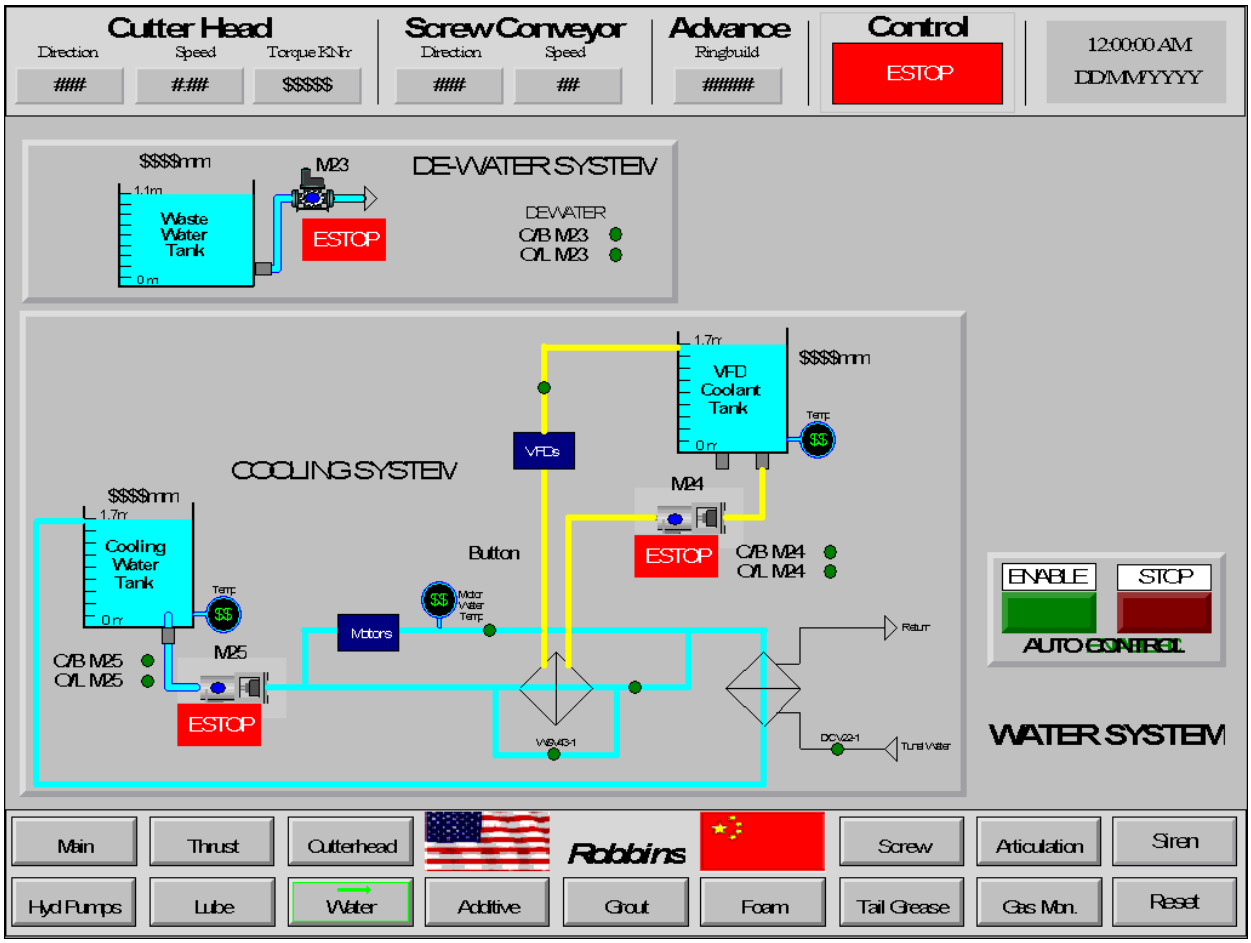

Figure 2.8 Water System Control Page

3.2-8 Water Systems Templates

The system can be set to start water pump/motor M23, M24 and M25 by pressing the Enable pushbutton template or stop if the stop button is pressed.

Template indicators monitor the following for each circuit:

VFD Water System

- Circuit Breaker M24
- Over Load M24

Cooling Water System

- Circuit Breaker M25
- Over Load M25

Dewater System

- Circuit Breaker M23
- Over Load M23

- Motor Water Temperature

- Directional Control Valve DCV22-1
- Water Tank Temperature

In addition, each water tank has a water level bar graphs monitor marked in meters.

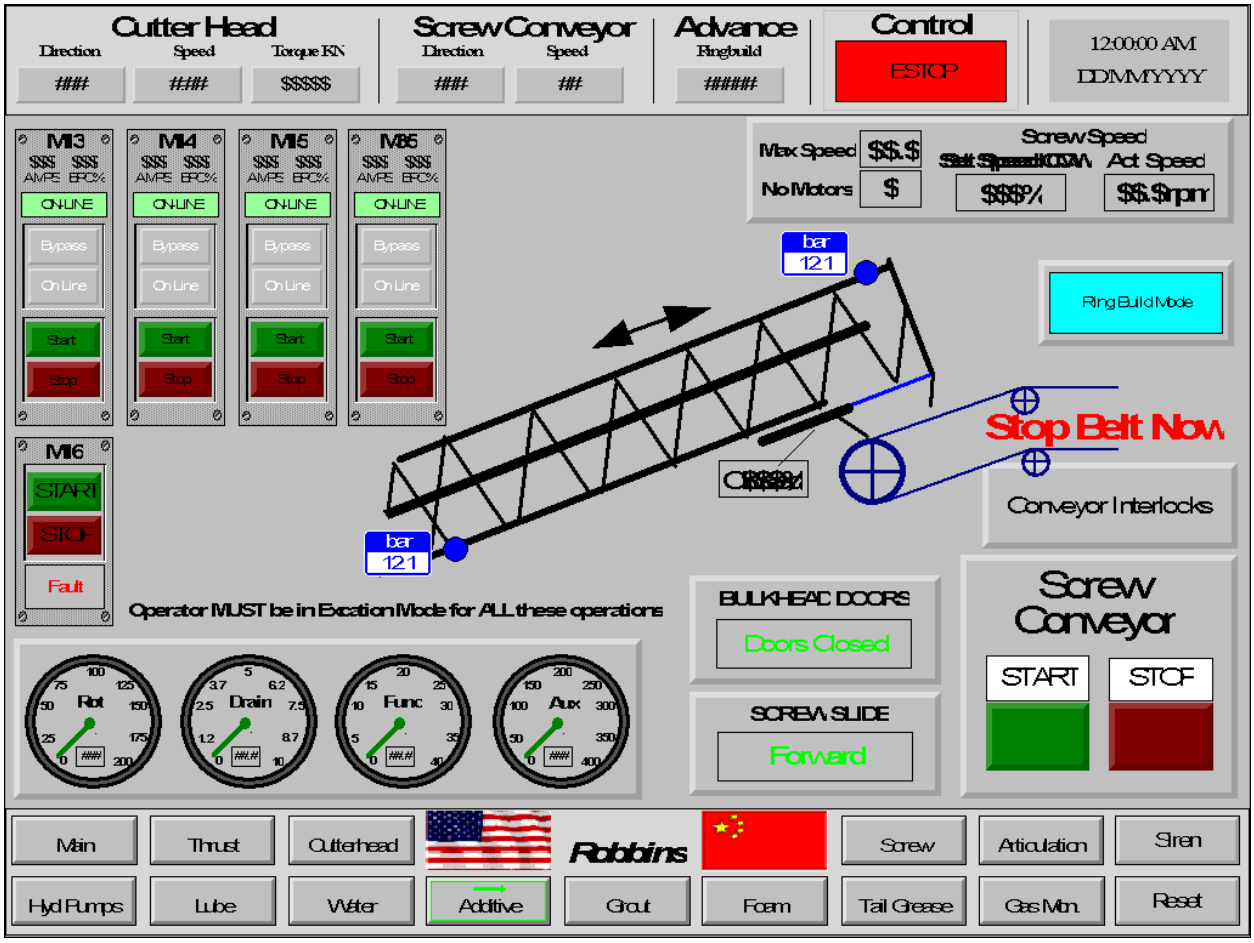

2.9 Screw Conveyor Control Page

3.2-9 Control Panel - Screw Conveyor Page

Screw Conveyor Template
The screw conveyor can start or stop by pressing the corresponding button on this template.

Additional templates are used to monitor the operation of the Bulkhead doors, Screw Slide, Screw Gate and screw conveyor Rotate Pressure.

Screw Conveyor Motors M13, M14, M15 and M35 Templates
The operator can use these templates to monitor and change the status (On Line/Bypass) of motors M13 through M15 and M35, it displays values as Current levels in (Amps). This screen also includes the following features described on the Panel Main Screen like, **Reset Template, Siren Template, Cutter Head Start Template** along with this features it also displays Cutter Head Direction, Speed, Torque, Screw Conveyor Direction and Speed and Advance Ring Build.

On Line Template
This template allows the operator to enable each motor individually. When the On Line template is pressed the ON-LINE template turns green and the motor is ready to start.

Bypass Template
This template allows the operator to disable each motor individually.

Pilot Pressure M16 Circuit Template
The operator uses this template to start or stop motor M16.

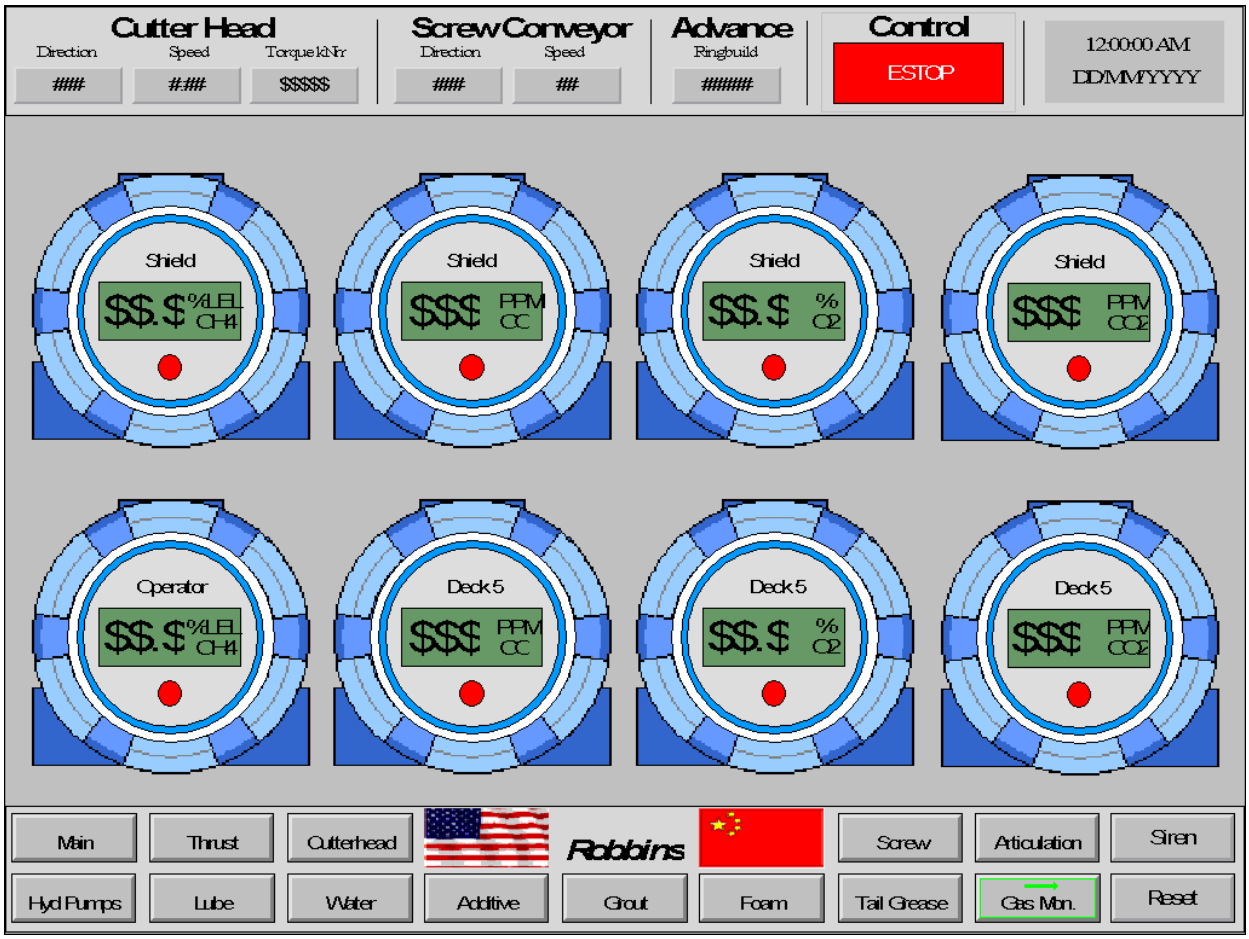

2.10 Gas Monitoring Control Page

3.2-10 Control Panel – Gas Monitoring Page

The EPB machine is equipped with gas monitoring equipment. The operator uses this screen to monitor gas readings, monitors are installed on the shield, operator's cabinet and back-up.

Additional templates are used to monitor the operation of the Cutter Head, Screw Conveyor and Ring build Advance.

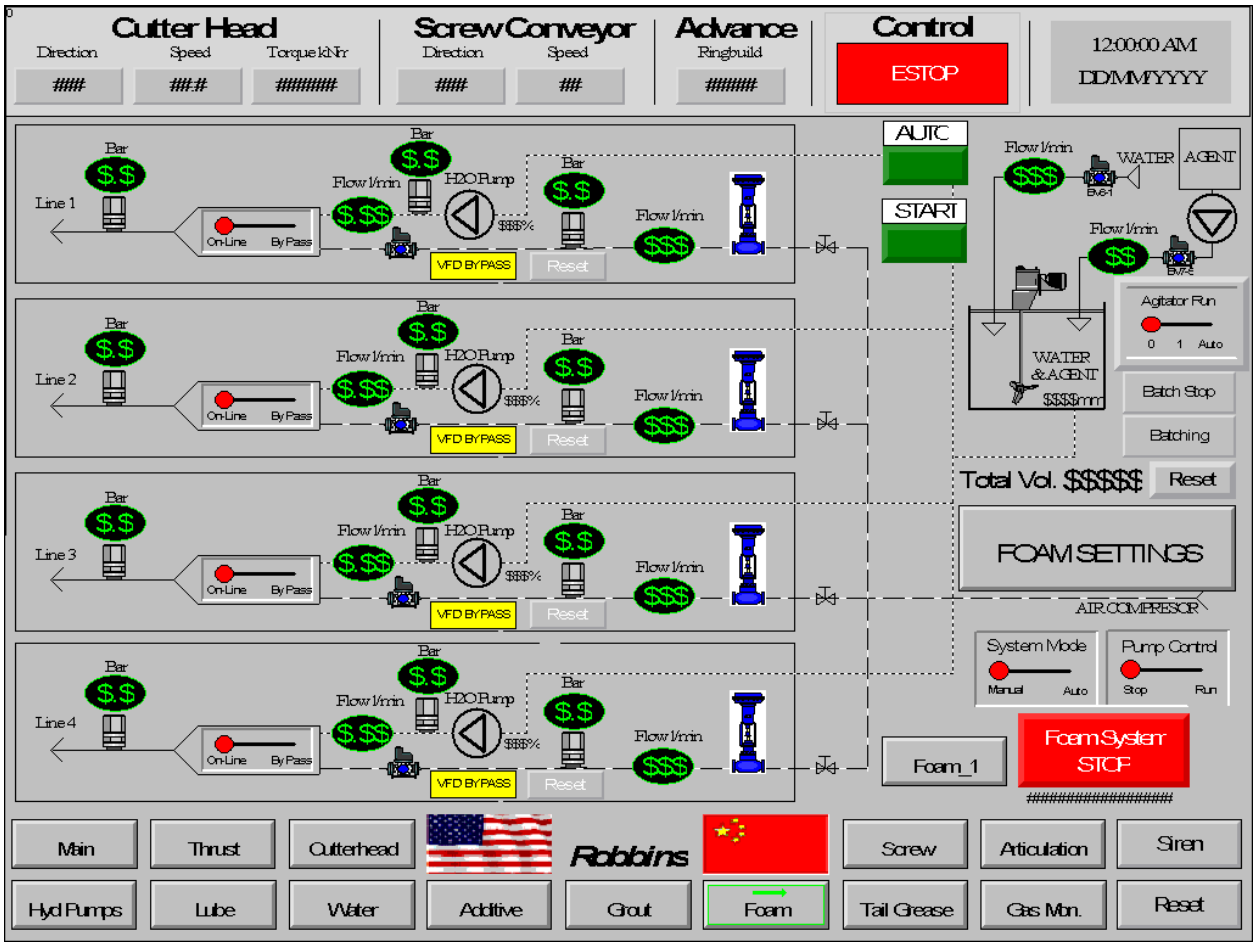

2.11 Foam Control Page

3.2-11 Control Panel – Foam Page

The EPB machine is equipped with a foam system equipment. The operator uses this screen to start and stop this system.

Additional templates are used to monitor the operation of the Cutter Head, Screw Conveyor and Ring build Advance.

Foam Line Bypass template
This template allows the operator to select which foam lines will be activated.

Control Mode Template
This template is used to select manual or automatic control.

Manual Injection Template
This template is used to control foam injection in manual mode only. Injection is automatically linked with the stroke of the thrust cylinders in automatic mode.

Foam Total Template
This template records the amount of foam injected during each excavation cycle. The template is reset every segment stroke, or can be reset manually with the reset template.

Foam Settings Template
This template brings up a new window (shown below) where the operator can select set points for each foam line individually, including; Foam Injection Ratio (FIR), Foam Expansion Ration (FER), Solution Water Ration, Solution Batch Size, Manual Foam Injection Flow, Foam Pressure Limit and Manual Pressure Setting.

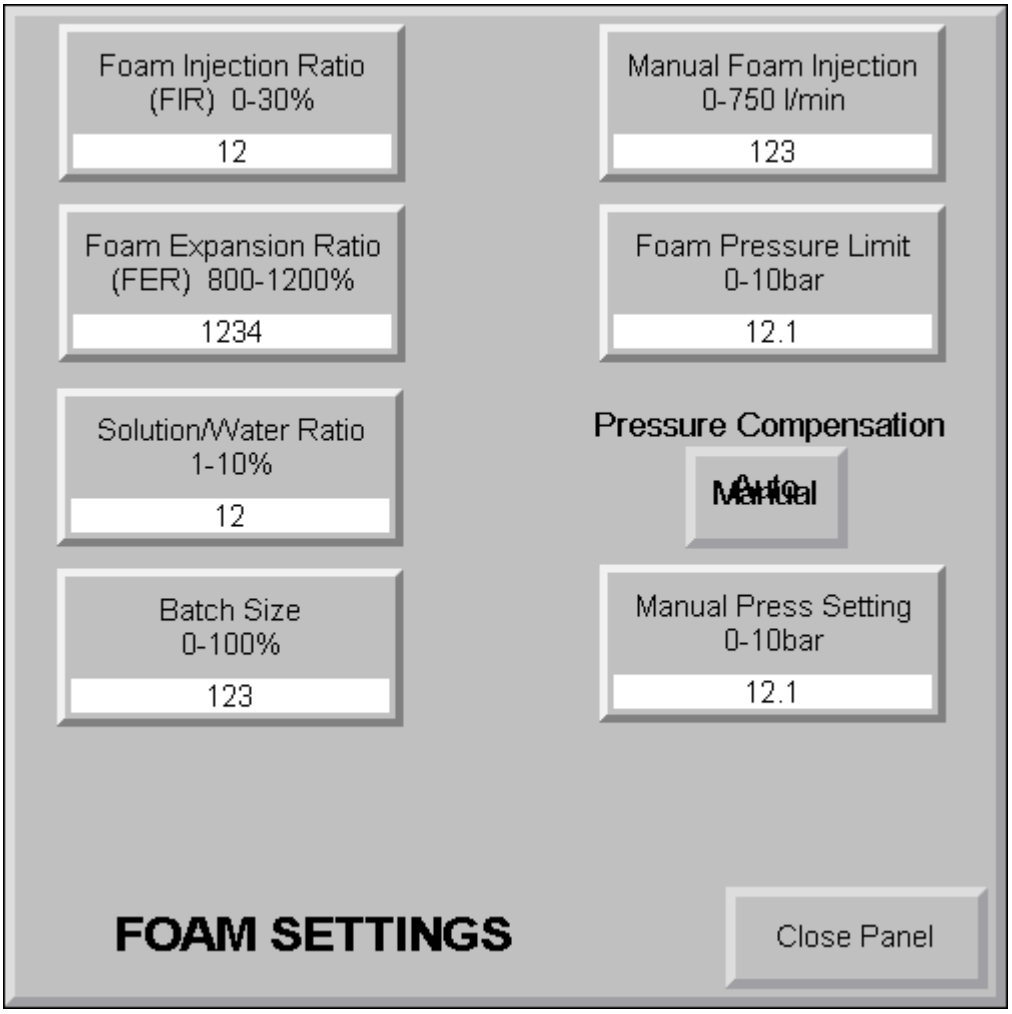

Foam Settings

Batch Solution Template
This template automatically mixes a new batch of solution

Solution Tank Agitator Template
This template allows manual/automatic operation of the solution tank agitator.

Additional templates are provided to monitor the foam flow and pressure for each grout line.

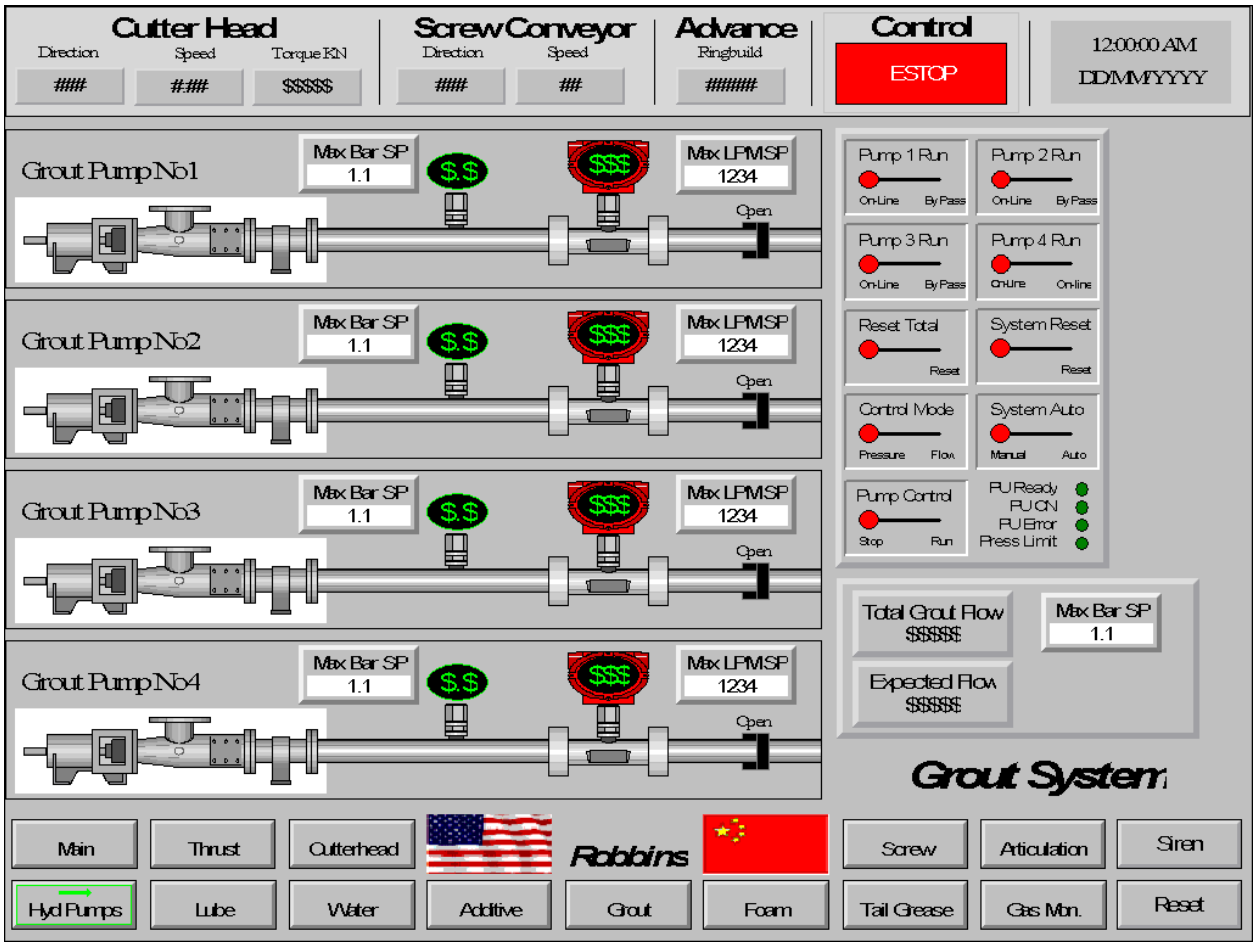

2.12 Grout System Control Page

3.2-12 Control Panel – Grout Page

The EPB machine is equipped with a grout system equipment. The operator uses this screen to start and stop this system.

Additional templates are used to monitor the operation of the Cutter Head, Screw Conveyor and Ring build Advance.

Grout Line Bypass Template
This template allows the operator to select which grout lines will be activated.

Control Mode Templates
These templates are used to select which method of control is used, flow control, pressure control or manual control.

Pump Control Template
This template is used to control grout injection in manual mode only. Injection is automatically linked with the stroke of the thrust cylinders in automatic mode.

Grout Total Template
This template records the amount of grout injected during each excavation cycle. The template is reset every segment stroke, or can be reset manually with the reset template.

Grout Setting Template
This template brings up a new window (shown below) where the operator can select set points for each grout line individually, including; auto injection flow rate, manual injection flow rate, pressure control set point and maximum pressure set point.

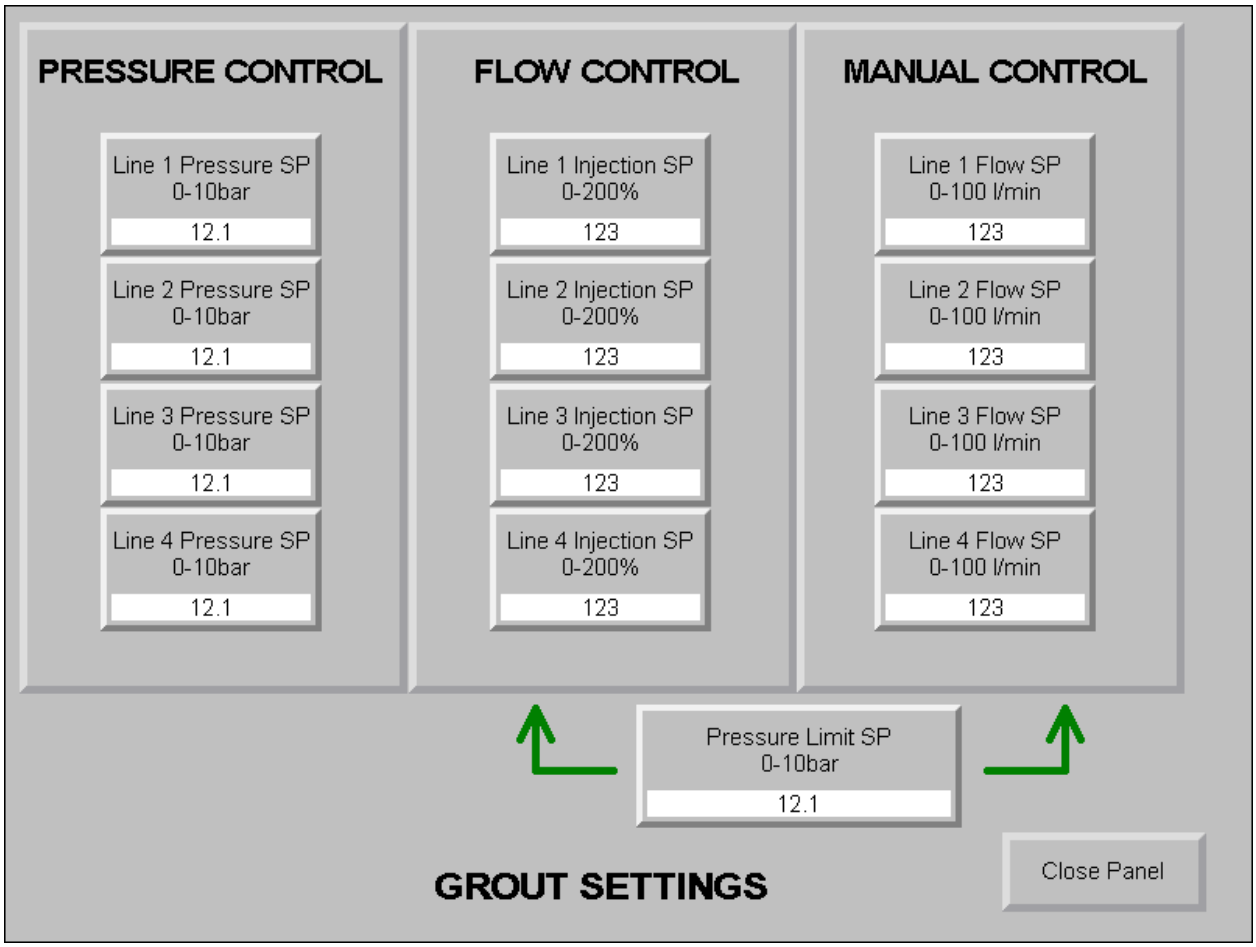

Grout Settings

Grout Tank Agitator Template
This template allows manual/automatic operation of the grout tank agitator.

Additional templates are provided to monitor the grout flow and pressure for each grout line.

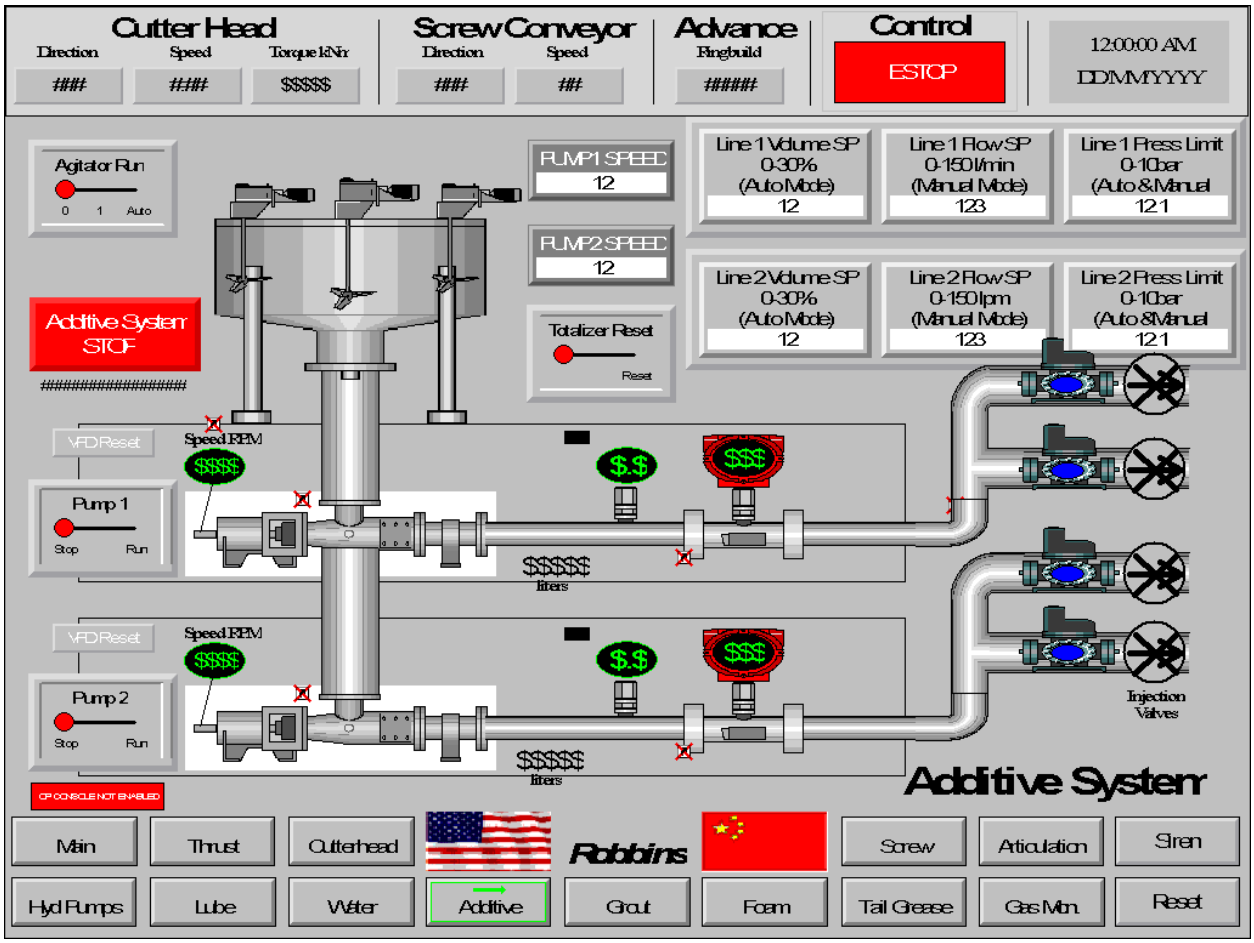

2.13 Additive System Control Page

3.2-13 Control Panel – Additive Page

The EPB machine is equipped with an additive system equipment. The operator uses this screen to start and stop this system.

Automatic/Manual Control Template
This template allows the operator to select manual or automatic additive injection.

Flow Set Point Templates
These templates allow the operator to select the injection amount for both manual and automatic injection modes.

Injection Line Bypass Template
These templates allow the operator to select which injection lines are activated.

Maximum Pressure Set Point Template
This template allows the operator to select the maximum pressure for additive injection.

Additive Pump Run Template
This template enables additive injection in manual mode only. Injection is automatically linked to thrust cylinder operation in automatic control mode.

Tank Agitator Run Template
This template allows manual and automatic control of the tank agitators

Additional templates are provided to monitor injection pressure, flow and pump speed, as well as monitoring the operation of the Cutter Head, Screw Conveyor and Ring build Advance.

4. TBM Operation

Overview

The TBM consist of the operation modes illustrated in the figure below. Set the mode according to the work content using the mode selection switch.

Prior to operation, we ask that you implement the previously described initial checks and fully understand the safety devices and necessary precautions, which ensure proper operation.

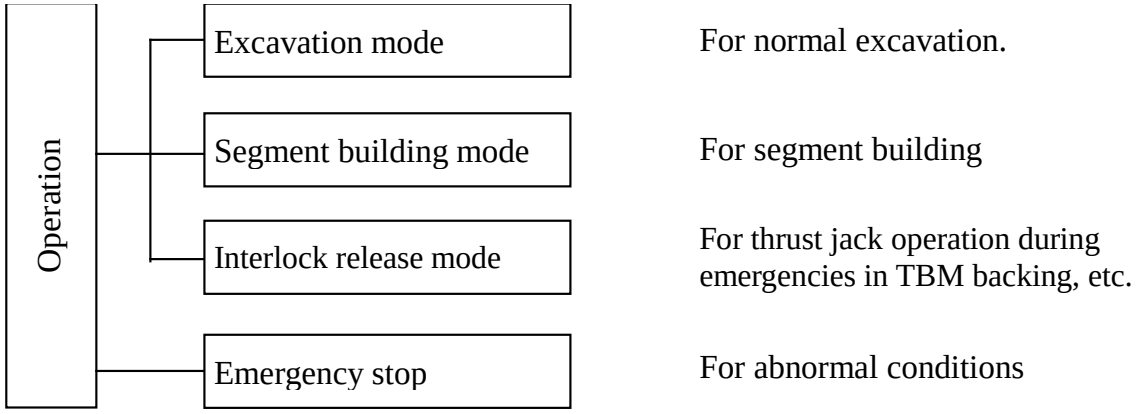

Note: A Thrust interlock switch is located on the thrust page on the control panel. Releasing this switch allows the operator to activate the thrust cylinders independently using high pressure in an emergency, while in the segment build mode.

When the switch is released, the TBM can move forward regardless of the cutterhead rotation. This sometimes causes startup malfunction due to heavy accumulation of cuttings on the cutterhead. Use this feature carefully and only in emergencies.

4.1 TBM Operation Sequence

The TBM operation sequence is listed below. TBM Boring selection in shield mode (NOMST also uses the same procedure)

1. Grease Power Unit
2. Cutterhead settings
   - Cutterhead torque NORMAL
   - Cutterhead rotation CW or CCW
   - Cutterhead main motors ON
3. Cutterhead rotation ON
4. Thrust cylinders 1 through 24 selected

5. Screw gate discharge OPEN
6. Thrust cylinders extended
7. Screw conveyor ON
    - Screw conveyor rotation CW
8. TBM boring speed controlled by volume of muck
    - Speed setting with volume knob

4.1-1 The following operation applies at the end of a stroke.

- Screw conveyor STOPPED
- Thrust cylinders STOPPED
- Cutterhead STOPPED
- Screw conveyor gate CLOSED
- Power unit STOPPED

4.1-2 Segment Ring Building

- Segment build mode selected in Operators cab and Thrust operation box.
- Power unit startup - Start power unit necessary for segment assembly.
- Erector operation - thrust cylinders
- Power unit STOPPED
- Segment build is completed.

4.1-3 EPB Excavation Guidelines

During the operation of the shield machine, it is important to stabilize the excavated ground. The ground in the chamber contains foam and other additives, which are mixed by cutterhead rotation to improve ground consistency and liquidity.

The tunnel face can be stabilized by pressurizing the treated ground in the chamber. The pressure of the treated ground in the chamber is checked with the ground pressure sensors.

The machine operation is performed by adjusting the thrust cylinders stroke speed to be within the margin of the cutterhead torque and by adjusting the screw conveyor rotation speed and the thrust cylinders stroke so that the measured ground pressure approaches the targeted ground pressure.

For adjustment of screw conveyor rotation speed, there are many uncertain conditions such as the discharging efficiency and the filling rate, etc. Therefore, the screw conveyor rotation speed should be decided based on the data of the initial excavation.

CAUTION

In addition, the injection position, the injection amount, and selecting the materials of additive and foams are important factors for ground stabilizing. Decide them properly, according to the ground condition and the excavating situation.

4.1-4 Starting Procedure

Start up the power units and rotate the cutterhead according to the operating procedure. Do not operate the screw conveyor and thrust cylinders.

Open the screw gate slightly and rotate the screw conveyor to a minimum speed. Gradually increase the thrust cylinders stroke speed. Adjust thrust cylinders stroke speed, screw conveyor rotation speed and screw gate opening as necessary to stabilize the ground pressure to meet target pressure setting.

4.1-5 Controlling Face Pressure and Excavation Rate

To excavate, it is necessary to fill the chamber with excavated ground and discharge equal volume amount of excavated ground. However, the face conditions cannot be detected directly, check the following:

- Ground chamber pressure
- Discharge ground (cuttings) volume

The operating procedure is as follows:

- Determine thrust cylinders stroke speed from the pre-set value of the ground discharge pressure. It is essential that the cutterhead motors are not overloaded.
- Set the screw conveyor rotation speed to discharge the volume of excavated ground in proportion to the thrust cylinders stroke speed. It is essential to determine the ground discharging efficiency of the screw conveyor compared to the volume of ground discharged and to balance the ground volume.
- Ground pressure at the face may change due to changes in the ground conditions, changes in the ground discharging efficiency of the screw conveyor and volume of ground discharge in the chamber. In such cases, adjust the screw conveyor rotation speed to stabilize the ground pressure.
- When it is not possible to deal with changes in the earth pressure by merely increasing or decreasing the screw conveyor rotation speed, the ground pressure at the face must be readjusted by altering the thrust cylinders stroke speed.

4.2 Operating the Hydraulic System

The Thrust units and power units are arranged and described in the table below. Select the power units corresponding to the unit you wish to run, and start the unit.
(Refer to the table below.)

When starting a power unit, first verify that the suction line ball valve (located near the tank) is open. (The ball valve is closed during line filter maintenance. Make sure the valve is open after filter maintenance.)

Power Unit System Table

Power Unit Name	Operable Unit or Operation
Thrust PU	• Thrust cylinders
Erector Rotation PU	• Erector Rotation
Erector PU	• Erector cylinders
Articulation PU	• Articulation • Screw gate open/close • Bulkhead-gate open/close • Screw slide • Segment feeder cylinders • Auxiliary functions
Screw rotation PU	• Screw conveyor
Grout pump PU	• Grout system
Automatic oil lubrication PU	• Cutterhead driving parts lubrication
Grease lubrication PU	• Bearing and seal lubrication
Pilot PU	• Screw conveyor pilot pressure
Water PU	• Hydraulic heat exchanger • Back-up services • Foam/Grout/Additive systems

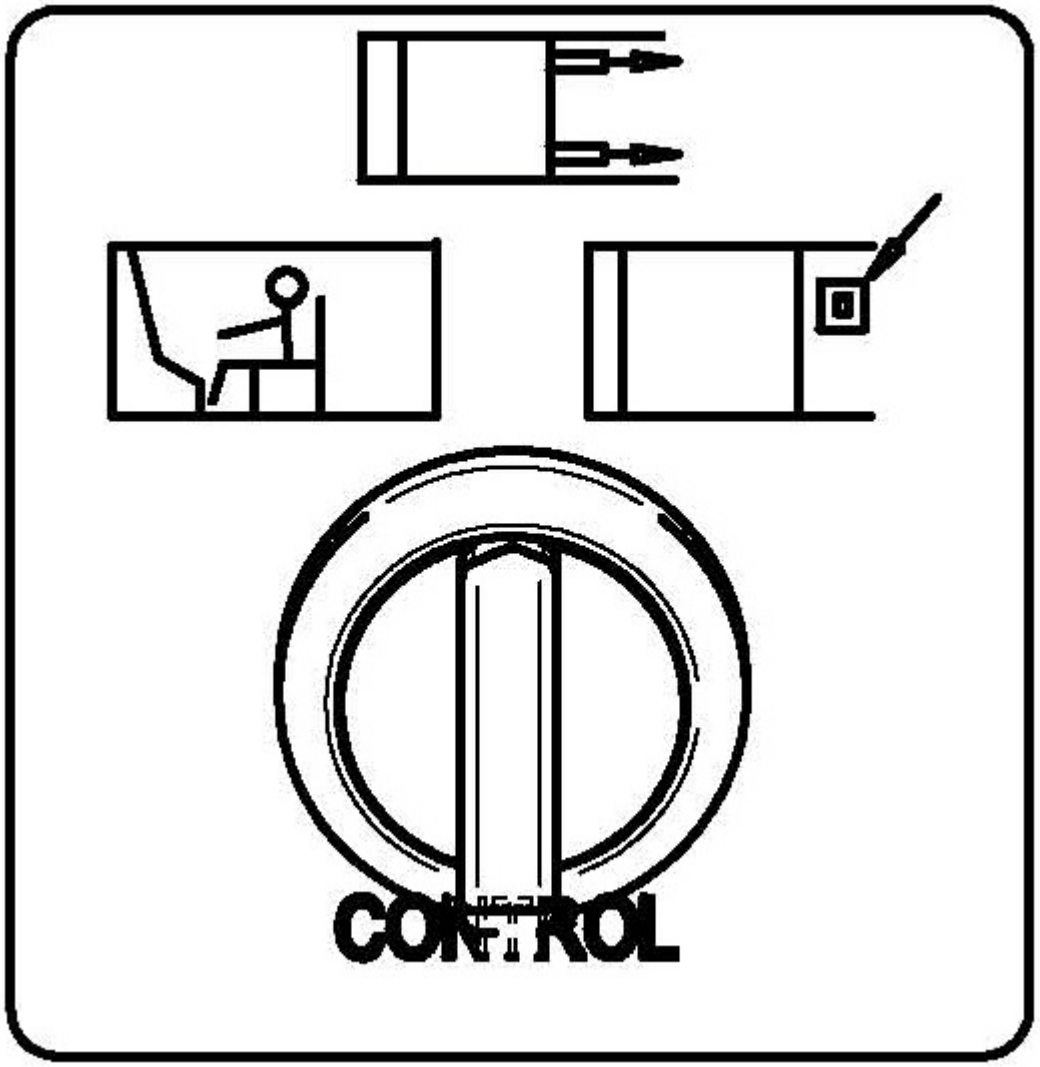

Thrust Cylinder Selector Switch

4.3 Operating the Thrust Cylinders

To operate the thrust cylinder select the Thrust operation mode located on the Control panel.

- Selecting the operation mode starts with the Thrust mode selection:

Boring: Allows TBM boring operation on the Control panel. This mode is selected during normal operation (counter clockwise rotation).

Segment: Allows boring operation from inside TBM thrust cylinder operation box. This mode is selected during segment ring building (clockwise rotation).

Configure the Thrust operation (position) switch as described on the table below.
The Thrust mode selection and the thrust cylinder extension pressure values are applied according to the Thrust mode selection, these are described below.

	Thrust mode	Thrust operation	Extension pressure
Normal boring	Boring	Control panel on the Gantry	High pressure (35 MPa)
Segment Build	Segment	Inside TBM	Low pressure (5 MPa)

Note:
The thrust cylinders can be operated independently under high pressure using the thrust interlock release switch located on the touch screen, this operation allows the TBM move forward even though the cutterhead is not in operation.

As a result, the machine may become inoperable due to a heavy accumulation of muck on the cutterhead. Do not, use this method unnecessarily.

Thrust cylinder retraction pressure is set at 20MPa, regardless of Thrust mode.

The power units that require thrust cylinder operation are listed below.

	Power Units need for startup
Normal boring	Thrust PU and wear detector PU
Segment build	

4.3-1 Synchronizing the cylinders

There are two modes of thrust cylinder synchronization (i.e. cylinder extension in line with the segment below pressure of 5MPa):

Measured synchronization: Synchronization (under low pressure) of cylinders 1, 6, 13 and 20 only, these are synchronized with the same speed for stroke measurement.

All synchronization: Synchronization (under low pressure) of all cylinders that are not selected for extension.

4.3-2 Adjusting the thrust cylinder speed

The thrust cylinder speed is controlled by the proportional control volume valve located on the Control panel (Normal Boring Operation).The speed is set by turning the proportional control knob CW or CCW. When adjusting the TBM boring speed, allow a safe margin to ensure that cutterhead overload does not occur.

The flow control valve next to the operator’s should be used in the event of an emergency, such as the electrical control valve malfunction.

4.3-3 Adjust thrust cylinder pressure (each block)

The pressure for each thrust cylinders block are controlled using a proportional control valve volume knob on the Control panel (Normal Boring Operation). The pressure for each thrust cylinder block can be set up from 0 - 100%.

4.3-4 Thrust Pressure

Pressure is set using the relief valve.
Normally, the relief valve is pre-adjusted. Do not change the setting.

4.3-5 Main interlocks

- Thrust is disabled in TBM boring mode (high pressure) if the cutterhead speed is less than 0.2 rpm.
- Thrust is disabled in TBM boring mode if the cutterhead torque has reached its higher limit (100% in normal mode, 120% in maximum mode).
- Thrust is disabled in TBM boring mode if the erector extension cylinder is extended.
- Only low-pressure thrust cylinder extend is possible in segment mode.
- Synchronized extension of cylinders is enabled only when thrust cylinders are extended in boring mode (high pressure) with Synchronization switch being on.
- Operation inside the TBM is enabled in segment mode.
- Thrust cylinder retract is disabled in boring mode.
- Thrust is disabled if oil temperature in the reservoir is high.

Safety measures during shield cylinder operation

⚠ WARNING

Do not enter the area between the thrust cylinder spreader and a ring segment. A serious injury or death to personnel may occur. Do not get near the circumference of the thrust cylinder spreader. No personnel are allowed around the thrust cylinder and the segment before and during thrust cylinder operation.

4.4 Grease/Excluder Grease Lubrication

The grease system should operate in automatic mode for normal conditions. However, manual mode can be selected for special cases, like initial startup of the machine.

4.4-1 The following alarms are for grease lubrication.

Grease lubrication begins and a lamp illuminates when grease lubrication is running. The lamp also illuminates during pauses in automatic mode.

- Grease Flow Indicator

An alarm sounds if the grease cycle is not detected for more than 60 seconds.

- Low Flow Alarm

An alarm sounds if the grease pressure switch detects pressure of 18MPa.

- High Pressure Alarm

Cutterhead is disabled and an alarm sounds after 10 minutes of grease shortage.

- Low Flow Shutdown

Note:

In an emergency if boring cannot be stopped, the operator can continue boring without grease flow by pressing the interlock override button.

- The grease power unit stops if a grease power supply error or reverse phase is detected.
- If less than 30% of the grease barrel remains, an alarm sounds and an indicator illuminates (low level alarm).
- Grease system must be enabled to allow cutterhead rotation.

If the TBM is shut down for a long period of time, perform grease lubrication 2 hours/day and check for abnormalities.

4.4-2 Replacing the grease drum

Prior to replacing the grease drum, be sure to stop the grease pump. Replacing the grease drum with the grease pump running may result in pump damage or injury to personnel.

- Prior to replacing the grease drum, verify that the grease pump has been stopped.
- Make sure that the drum is set securely. An unstable drum may result in pump damage.
- After the drum has been set, restart the grease pump.

4.5 Automatic oil lubrication

- The automatic oil supply pump, supplies oil to the TBM bearing and seals, increasing the bearing service life, providing seal lubrication and heat removal.

- To resume operation of the machine after a long stopping period, operate the automatic oil supply pump prior to TBM boring.

- Perform maintenance and inspection of the gear oil level. When low oil level is detected, replenish the gear oil.

- The sight glass on the piping inside machine allows you to check the lubrication level.

- The automatic oil supply PU starts automatically prior to the cutterhead motor startup, and automatically shuts down following the cutterhead motor stop.

The lubrication circuits for the main seals are designed with manually adjustable pressure relief valves to regulate the pressure in each independent cavity. The pressures should always be adjusted as shown on the lube schematic to maximize the life of the seals. Failure to maintain proper pressure settings can reduce the life of the seals and increase the risk of damage to the main bearing and gears.

In the event that contamination is detected in the lube circuit, contact Robbins Engineering department immediately, and adjust the lube/grease systems according to the “alert” or “emergency” procedures detailed on the schematics depending on the severity of contamination.

4.5-1 Lube System Alarms/Interlocks

- Pump high pump.
- Seals lube oil high temperature.

4.6 Operating the cutterhead

- Power on for #1, #2 grease supply pump, excluder grease pump, oil lubrication pump, and #1, #2 Cutterhead VFD panel, enables Cutterhead rotation.

- Five electric motors (with gearboxes) are used to rotate the cutterhead.
- There are two cutterhead torque settings: [NORM.] and [MAX], for normal TBM boring, select [NORMAL]. When [MAX] is selected, be sure to comply with the running times stated in the table below.

Torque selection	Motor load	Speed	Torque	Operation Time
NORM.	100%	2.66 rpm	5,825 kN-m	Continuous
MAX.	130%	2.66 rpm	7,572 kN-m	Short periods only

- The cutterhead can rotate either CW or CCW. However, continuous rotation in the same direction may lead to TBM rolling. Set the rotation direction after assessing the rolling tendency of the TBM. If you wish to change the direction, first stop the cutterhead completely.(The machine is protected for 30 seconds by interlock if the cutterhead rotation is changed.)

- Pulling the emergency stop button stops all machine operations with the exception of the grease lubrication.

- Cutterhead torque:
  (NORM.): Alarm sounds and a message is displayed if the cutterhead torque reaches 80%.

- (MAX): Alarm sounds and a message is displayed if the cutterhead torque reaches 110%. Cutterhead motors stop if the cutterhead torque reaches 100% in normal mode, or 130% in max mode.

- After the cutterhead motors have been selected by pressing the online buttons, cutterhead rotation will begin when the operator presses the cutterhead start button.

- Drive motors are water cooled.

4.6-1 Cutterhead inching rotation operation

The operation panel is used to operate the cutterhead inching rotation. Cutterhead inching operation can be verified by the cutterhead speed template on each screen, or by the cutterhead position indicators on the thrust screen and by viewing the rotation of the rotary union.

⚠ WARNING

If the inching operation runs for a long time periods of time, the cutterhead motors may overheat. If this occurs stop the inching operation and wait until motor temperature returns to normal.

4.6-2 Wear detection bit

The system is continuously monitored using hydraulic pressure from motor/pump M19, pressure switch is set at 24 bar (350 psi), when pressure falls below this setting, directional control valve DCV164-1 is switched off and a warning message is displayed at the operator's console.

- There is only one wear detection bit equipped with this feature.
- Wear detection bit is 115mm high and has a rectangle form. Initial detection thickness is 20mm.

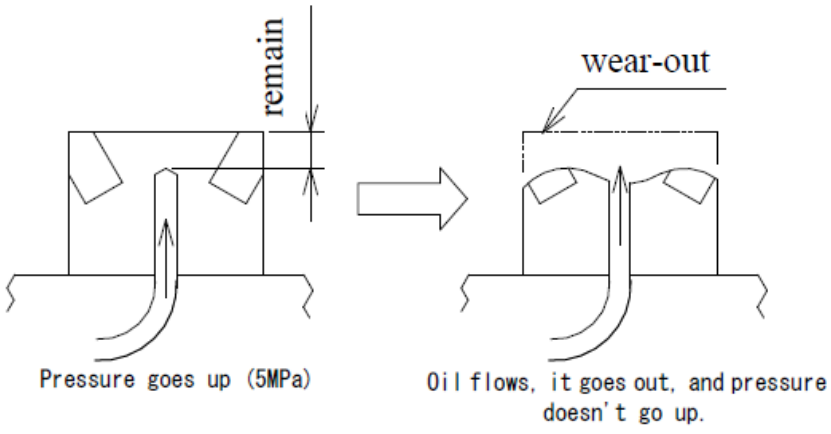

Mechanism of wear detection bit

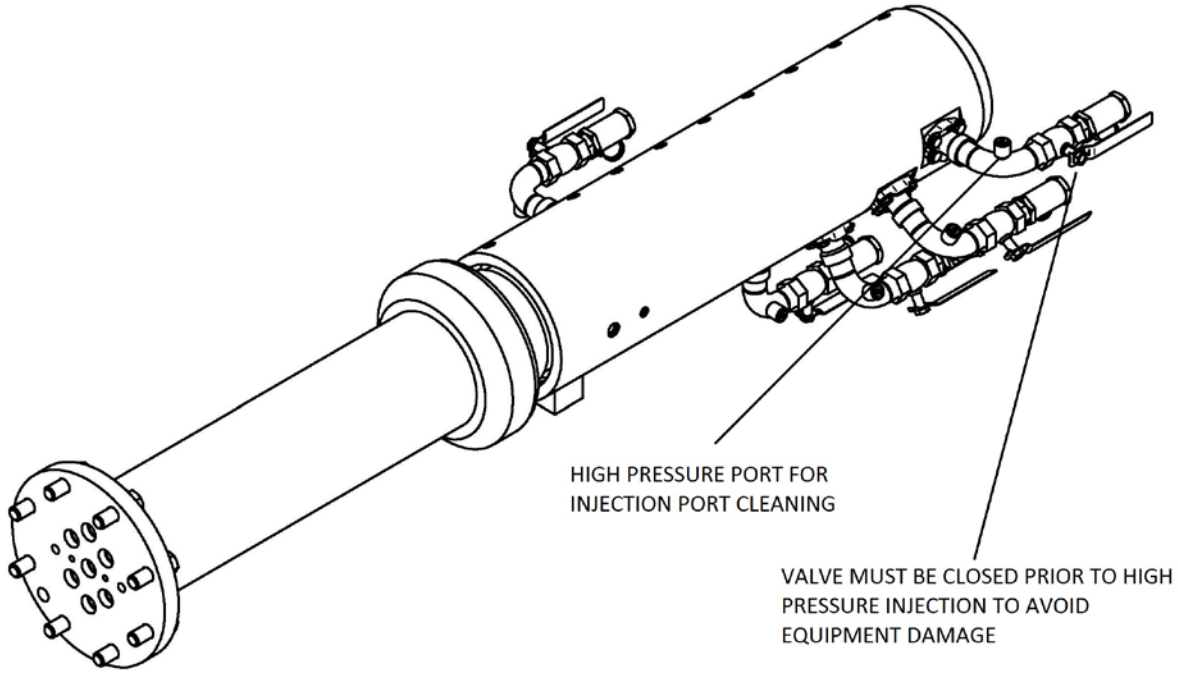

4.6-3 Injection port cleaning procedure.

In case any of the injection ports become clogged, it is possible to inject high pressure hydraulic oil at 21 MPa to clear the blockage. The clogged injection port must be plumbed first to the unused station on the screw conveyor cylinder manifold (MFD70-1) to avoid spilling hydraulic oil. Hydraulic oil injection is activated from the injection port cleaning template on the cutterhead page. The regular injection port ball valves must be closed prior to injection of high pressure oil.

Adjust valves as shown in the table below.

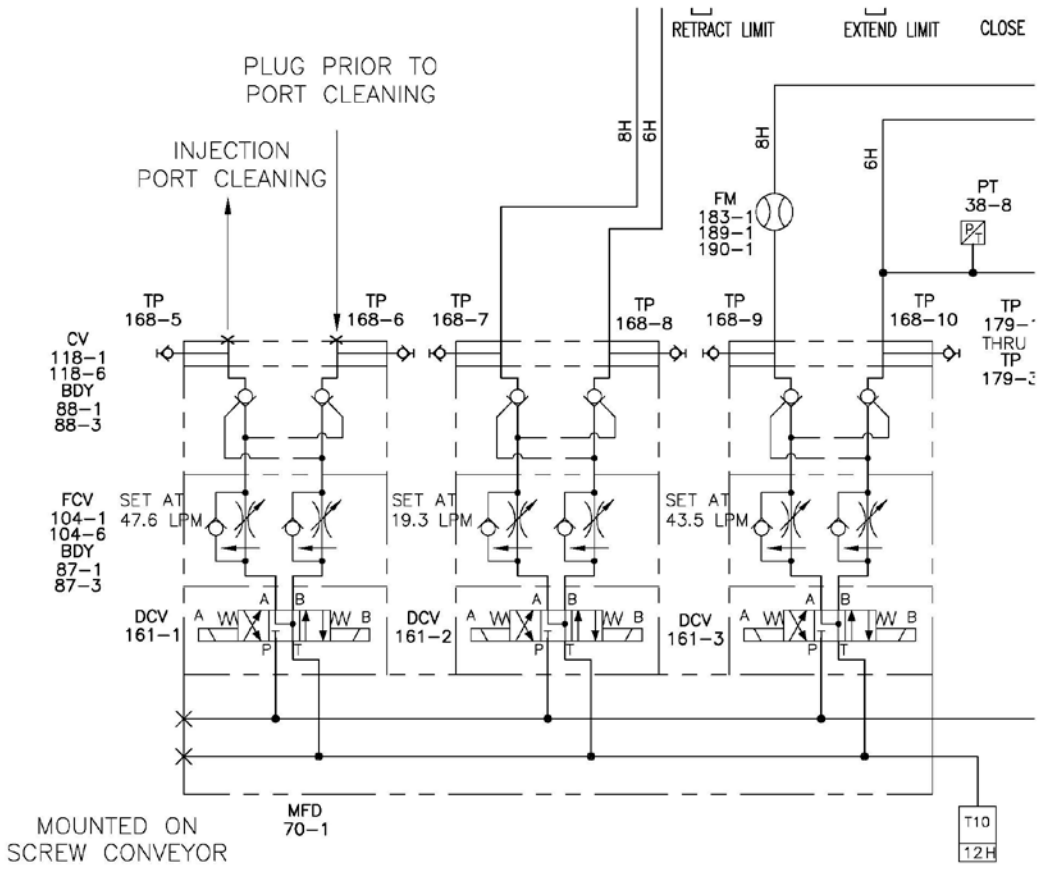

Injection Port Cleaning

CAUTION

Reverse above procedures to return to normal operations

4.7 Operating the Screw Conveyor

To rotate the screw conveyor, start motors M13, M14 and M15. The screw conveyor rotation is disabled if the screw gate is totally closed. The screw conveyor normal rotation is disabled if the BH (bulkhead) gate is totally closed (interlocked). Screw normal/reverse rotation is enabled if the screw slide is fully retracted.

Screw speed is adjusted using the speed control knob on the Control panel.
Although both forward/reverse (CW/CCW) rotation can be selected, the screw conveyor rotates forward in normal (CW) rotation for muck discharge. If the screw conveyor is plugged with cuttings or with boulders and rotation stops they can be release by alternately inching the conveyor in reverse/forward rotation.

The following interlocks, are provided for screw operation, these interlocks will stop screw rotation:
Screw conveyor hydraulic motor pressure drain [HIGH (0.2MPa)]

Screw conveyor rotation hydraulic pressure [LOW (2.0 MPa or below)]

4.7-1 Screw Conveyor Gate Operation

To operate the gate, start the gate power unit.
The gate is provided with an accumulator that quickly closes the opened gate when power failure occurs. Make sure the accumulator is charge with nitrogen N^2 at 1000 psi.

4.7-2 Operating the Gate with the Accumulator

If power interruption occurs while the gate is open, it can be shut by opening the needle valve on the accumulator system, refer to the hydraulic schematic for further information.
Open the needle valve 105-4 after opening the needle valve105-2.

CAUTION

The accumulator must be fully charge with nitrogen at 69 bar pressure.

4.7-3 Operating the Screw Conveyor Slide

To operate the screw conveyor slide, start the gate power unit

Preparation:

- Support the Screw conveyor drive unit assembly to the segment.
- Detach the bolts that connect the tube and the pin that connects the lifting rod of the screw conveyor.
- The screw slide operation can be executed.

After the slide operation ends, reverse the previous operation.

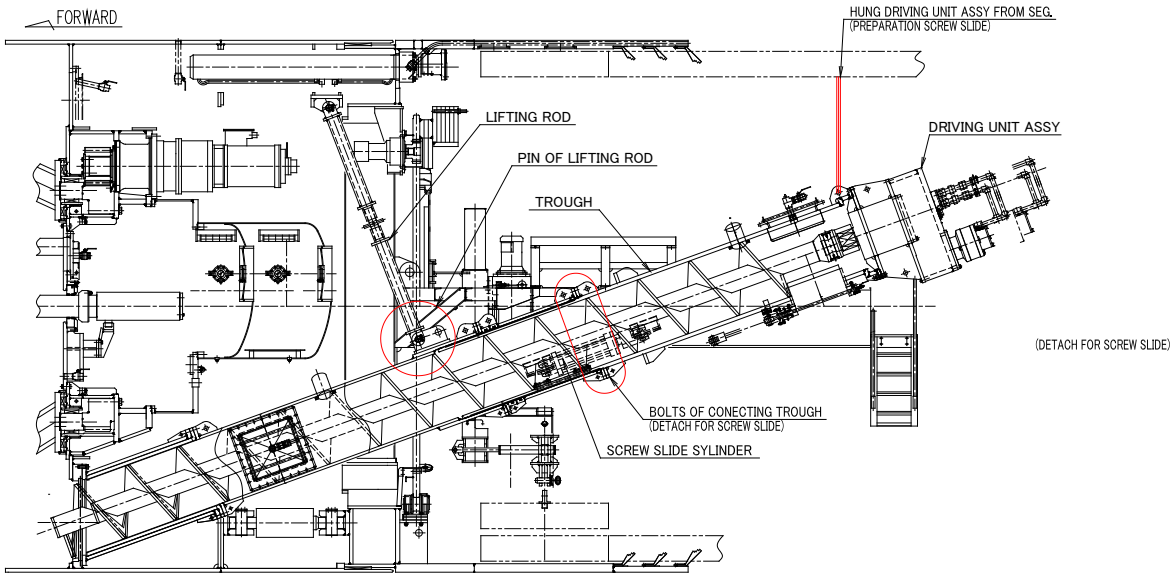

4.8 Erector Operation

Erector operation cautions

- The erector handles heavy material. Prior to operation, verify that no one is near the work area. During operation, verify that no one is approaching the work area.
- When the erector is not in use, set the grip in the upper position to ensure safety. Take extra precautions to ensure there is no interference with the scaffold.
- The maximum possible angle of rotation from the ground side of the grip is 220° to the left and right. A limit switch stops the erector from rotating beyond these limits. (Over-rotation is detected by the cable reel.)
- If the movable deck is extended, the rotation can be achieved by inching the erector.
- To use the erector, start the erector rotation power unit and the erector extension-retraction/slide support power unit.
- The erector rotation [CW/CCW] limit switches prevents further turning.
- Periodically charge the wireless operation box using the attached battery charger.

4.8-1 Operating procedure

- Set the operation switch to segment mode on both the operation panel and the remote thrust control station.
- Start the ER rotation PU and the ER extension PU.
- Retract the thrust cylinders of the applicable section to the segment to be set.
- Supply the segment to the grip with the segment feeder.
- Securely hold the segment lifting lug with the erector holding cylinder.
- Extend support cylinder A to prevent the segment from swaying.
- Move the segment to the specified location, extension, retraction, sliding and rolling (support) operations.
- Extend the thrust cylinders of the applicable section to the segment to be built. Fix the segment in place using nuts and bolts before and after this action.
- Release erector holding cylinder from the segment lifting lug.
- Repeat steps steps 2 through 9 for remaining segments.

4.8-2 Supplying oil to the erector oil reservoir

Overview

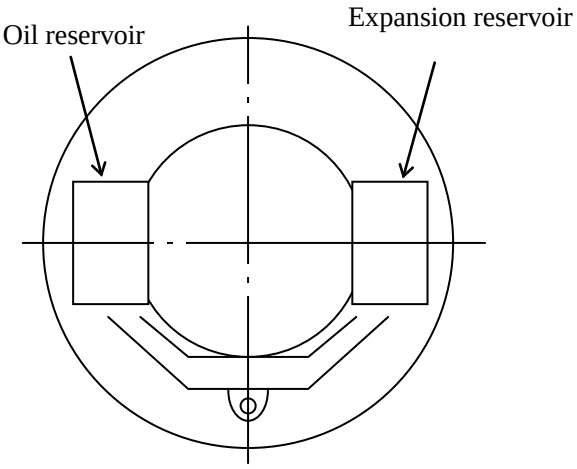

- The power unit with the oil reservoir to operate the erector cylinders is mounted on the erector.
- To prevent pump cavitation, oil is constantly supplied from the expansion reservoir, due to oil level changes in the hydraulic reservoir. Always maintain the proper oil level on the reservoirs.

4.8-3 Oil filling the reservoirs

- When supplying oil to the erector reservoir, be sure there is no erector load and the erector cylinders (all extension and slide supports) are retracted.
- Connect hose from the injection port cleaning manifold to the expansion tank reservoir.
- Start screw power unit and continue supplying oil to the erector tank until oil leaks from the relief valve (133-1).
- Reverse above mentioned procedures before starting operation.
- Verify the reservoir hydraulic pressure by viewing the pressure gauge (2 Bar).

4.9 Articulation Operation

The articulation capabilities are within the following range of values: Up/Down: 0.5 Degrees and Left/Right: 1.5 Degrees. The 8 groups of articulation cylinders are represented on the graphic starting with group number 1 at the twelve o'clock position following a clockwise direction and include the following cylinders:

Group 1: Cylinders 1 & 16
Group 2: Cylinders 2 & 3
Group 3: Cylinders 4 & 5
Group 4: Cylinders 6 & 7
Group 5: Cylinders 8 & 9
Group 6: Cylinders 10 & 11
Group 7: Cylinders 12 & 13
Group 8: Cylinders 14 & 15

CAUTION

- The optimum working method for articulation is shown below in Table 1.
- When articulation is possible and the cylinder groups have been selected to float, lock or enable, articulation is performed by turning the articulation cylinder extension switch on the operator's console.
- Cutterhead articulation is possible only if the articulation power unit and the #2 grease PU are in operation.

CAUTION

If the articulation angle or articulation cylinder stroke display appears abnormal on the operation panel, verify each articulation cylinder's extended length and the stroke meter inside the machine. Make sure that the stroke is provided on #1, 4, 8, and 13 cylinders.

4.9-1 Articulation Interlocks and Alarms

An interlock, similar to that provided in the thrust cylinders during boring, is provided for articulation operation. Articulation is disabled when the cutterhead rotation speed is equal to or below 0.2 RPM.

- Further articulation in the same direction is disabled when the articulation angle reaches its limits described above.
- Articulation is disabled if any of the articulation cylinders have reached the stroke limit.
- Articulation is possible when the articulation cylinders extend more than 30 mm which is the starting normal position, displaying "ARTICULATE: CONDITION OK".

  If the reference value is less, the articulation is disabled and "ARTICULATE: CONDITION OK" lamp goes off.
- Articulation cannot be accomplished in segment build mode.
- Retraction of articulation cylinders is not normally allowed. In case of emergency, the interlock override button must be pressed to allow retraction.

4.9-2 The methods used for articulation recovery are explained below:

- Synchronization: In this method, the articulation cylinders are synchronized with the thrust cylinders extended length and retracted in sync with the thrust cylinders. The articulation cylinders retract while low pressure is maintained from the recovery relief valve (PRV 128-2).

- As the machine is thrust forward, the articulation cylinders are pushed back. As each cylinder group retracts to their minimum articulation position (30 mm extended) they are locked on that position. Once three (3) cylinder groups have been pushed back to their minimum articulation position (30 mm extended), all cylinders are unlocked and floated so that all cylinders can be fully collapsed as the machine is thrust forward.

- Articulation recovery should be performed when machine has reached desired position shown below in table 2.

- Water injection behind articulation seal area (water located ports located on rear shield) can help clear the area to help the recovery process.

4.9-3 Articulation sequence

Operate the articulator in the sequence indicated in Table 1 and the articulator recovery in the sequence indicated in Table 2.

Table 1 Articulator Operating Sequence

Status	Drawing	Operation Overview
Before articulation	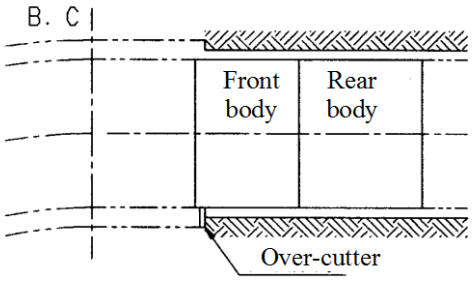	・ Start over-cutting when the shield machine is in front of Point BC by an amount equivalent to the length of the front body.
Articulation startup	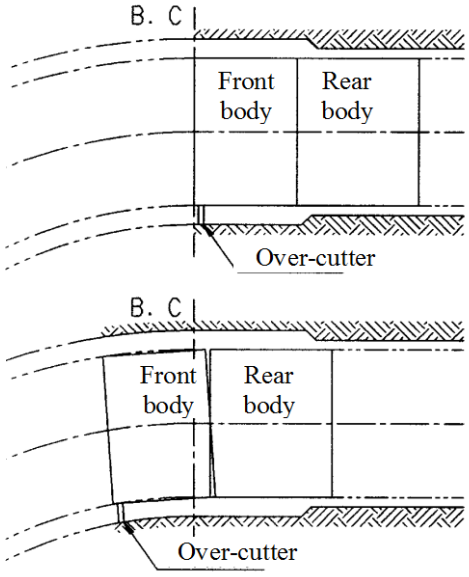	・Activate the articulation PU. ・As soon as the front edge of the shield machine reaches Point BC, start articulation while over-cutting. ・Select the articulation cylinder extension length, locking and following operation, and articulate the main body. ・Gradually bend the body until the center of articulation reaches Point BC. ・ When the articulation angle reaches the specified value, release the articulation extend switch.
Maintaining articulation	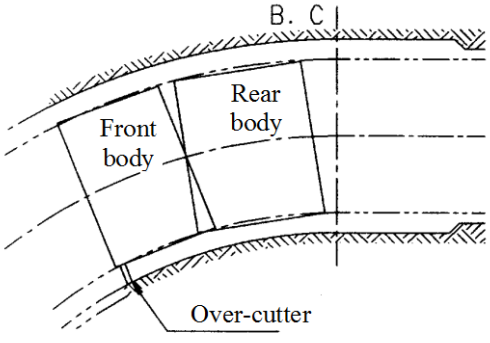	・ Once the machine is articulated, the front body and rear body are fixed by the articulation cylinders. The articulation angle may vary, however, if there is a leak in the hydraulic machinery or cylinders. If this occurs, extend and retract the articulation cylinders and adjust the angle. Or when 1.5º of right or left, or 0.5º upward, fix the articulation angle by Cylinder shrinking prevention metal fitting.

Table 2 Articulator recovery Operating Sequence

Status	Drawing	Operation Overview
Before recovery	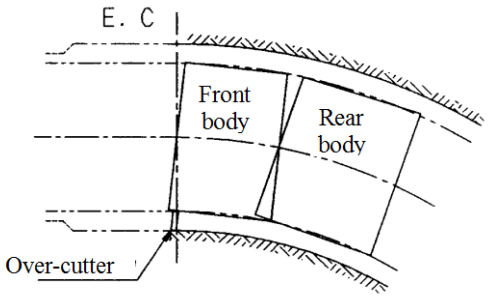	・Even when the front edge of the shield reaches Point EC, continue excavating while over-cutting by an amount equivalent to the length of the front body.
Recovery startup	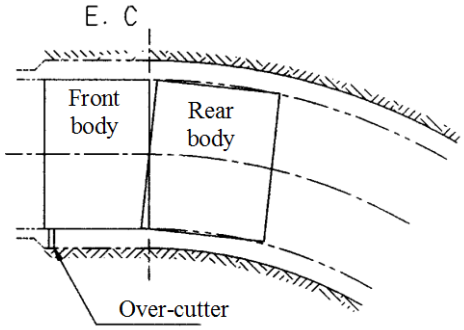	・Activate the articulation PU. ・As soon as the orientation of the front body becomes a straight line, perform articulation recovery operations while over-cutting. ・Articulation cylinders will automatically retract in sync with thrust cylinders extension. ・ If articulation recovery is difficult the articulating cylinders may be retracted by force. (Interlock override) ・ While excavating, gradually return the state of articulation back to the original state.
Ending recovery	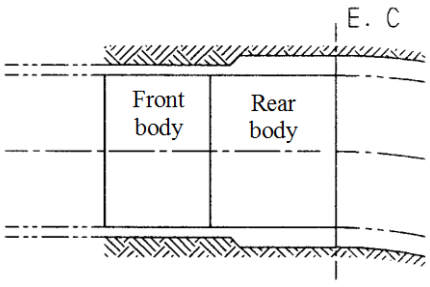	・When the shield machine reaches its original straight-forward position. Press the articulation recovery switch again to return to normal operation

4.9-4 Articulation cylinders air bleeding

- Insufficient air bleeding from the articulation cylinder hydraulic circuit may cause unstable movement of the shield machine front body. Always bleed this system after replacement of valves and piping.

- The articulation cylinders are divided into 8 blocks. It is safer to bleed the air block by block.

4.10 Tail grease operation

Two modes are available for tail grease injection operation: Manual and Automatic.

- MANUAL mode: Press this button to inject grease. Injection location port can be selected by pressing on corresponding TGF's (tail grease front) or TGR's (tail grease rear) port numbers on the touch screen. Grease injection into all the selected port locations is simultaneously performed.

- AUTO mode: Press this button to inject grease automatically. Selection of the injection location port sequence and time can be selected individually by pressing the injection port buttons (TGF's and TGR's) and timer buttons labeled TGF's Seconds or TGR's Seconds; these timers can be adjusted from 0 seconds up to 300 seconds.

Note:
Injection is performed with a 1 second overlap between port location changes.

4.10-1 Tail Grease Interlocks and Alarms

Tail grease pumps will shut down if high pressure is detected at the pump, or at the injection location.

An alarm sounds and a warning is displayed for low level on the grease drum. Tail grease pump will shut down when the grease drum is empty. The grease drum should be replaced when this happens.

4.11 Water system operation

The machine is equipped with a water system assembly to provide a means for cooling the hydraulic oil, cutter seals, and supplying water services where needed. Drawing D121471 Water System Assembly provides details for the installation of the system components while Drawing D121315 details the system in schematic form.

Water should be delivered into the system at a minimum of 360 liters per minute at 7 bar pressure.

The water system can be enabled without the console being active.

MODEL EPB2016-376/377
SECTION 3 • Maintenance

1 Introduction

Maintenance of this machine consists of preventive maintenance and corrective repairs to ensure that the equipment remains in peak operating condition. This section deals with both types of maintenance. As with most mechanical equipment, conscientious application of preventive maintenance practices will greatly reduce the need for corrective maintenance and the loss of machine availability during repairs.

Both types of maintenance are treated separately. Before performing any maintenance operation, refer to the appropriate schematic, assembly drawing, and vendor information contained in the remaining sections of this manual, as well as the information supplied in this section. Also, all safety instructions in the beginning of the manual, as well as any that appear in this section, should be strictly followed.

2 Maintenance Records

Accurate and complete records must be maintained for all maintenance activity, whether preventive or corrective. The records should include the date, operating hours, parts replacements, or other action taken to correct machine problems.

3 Safety Precautions

A thorough understanding of the system is essential before attempting any servicing. Unknowledgeable tampering may result in serious damage to equipment, subsequent delays, and injury to personnel. Some common sense safety precautions should always be exercised.

⚠ WARNING

Always turn off control power and remove the key when performing maintenance in areas where machine operation could cause injury.

Never attempt to repair a hydraulic hose or fitting while it is under pressure! Do not attempt to locate a leak with bare hands! High-pressure injection of oil through skin may result, causing severe injury.

Only qualified electricians must do servicing of electrical equipment. Power must be locked out before repair or servicing the equipment to avoid electrical shock or unintentional actuation of the machine or accessories.

Hazardous voltages are present within the electrical cabinet when the incoming power cable is connected and energized. Trained and qualified electricians must adjust system parameters within electrical cabinets and enclosures.

For additional safety precautions, see Safety Considerations in the front of this manual.

⚠ WARNING

Never:

- **Open a hydraulic component or line that is still pressurized.**
- **Step on or pull a hose loop.**
- **Install new hydraulic fluid without sampling the bottom of the drum for water.**
- **Let the reservoir level drop to the point where the pumps cavitate.**
- **Continue running an abnormally noisy system.**
- **Make system alterations without factory approval.**
- **Attempt repair or adjustments to electrical system without first shutting off the power. Qualified electrical personnel should do electrical system repairs.**

Always:

- **Replace hose assemblies before they fail completely.**
- **Use only approved fluids and lubricants. Refer to the figures at the end of this section.**
- **Understand all aspects of the system - one section may affect another.**

4 Preventive Maintenance

Routine preventive maintenance is recommended as a very effective means for spotting or preventing potential machine problems before they result in the failure of a component or system and the resulting downtime for repairs.

The items requiring maintenance are listed in the following paragraphs, along with the details and recommended frequency of application. Maintenance schedules are included at the end of this section, which list these maintenance recommendations and their frequency, such as daily, weekly, monthly or other recommended intervals.

4.1 Lubrication

The Lubrication Schedule (Topic 11) provides a list of items requiring lubrication and Lubricant Approval Chart (Topic 14) names all brands of lubricant approved by The Robbins Company.

The charts contain information relative to applicable types and grades of lubricants, approved brands, and designations, frequency of service and recommended quantities.

Typical Fluid Specifications (Topic 12) and Typical Grease Specifications (Topic 13) provide specifications for each type of lubricant.

The frequency and the specifications for lubrication of the hydraulic pump drive motors and other electric motors on the machine are covered in literature supplied by the motor manufacturer. The frequency for application is dependent on the severity of the operating conditions. Generally, operation of these motors in a tunnel boring application is considered as severe operating conditions.

5 Routine Maintenance Checklist - Each Shift

MAINTENANCE ITEM	NOTES
1. Hydraulic Reservoir: Check for proper fluid levels and fluid temperatures.	Refer to Topics 11 and 14 for lubricant quantities & specifications. Temperature must not exceed 65ºC for the Hydraulic System.
If fluid is below acceptable levels, pump motors will be disabled and a warning message will be displayed on the Operators Control Console.	The level should be near the upper mark on the sight gauge, but may fluctuate during initial startup. The level should stabilize during machine operation when the supply and return systems equalize.
If the hydraulic oil temperature is too high, a warning message will be displayed on the Operators Control Console.	The oil temperature will normally increase as the cutterhead operating torque increases. An abnormally low temperature during operation may indicate poor circulation in the system and the machine should be stopped to investigate the problem.
2. Pumps, Motors, and Valves: Check for unusual noises.	
3. Hydraulic System: Check for leakage in the system at normal operating temperatures and pressures.	**WARNING** **Never attempt to repair a hydraulic hose or fitting while it is under pressure! Do not attempt to locate a leak with bare hands! High-pressure injection of oil through skin may result, causing severe injury!**
4. Hydraulic Oil Filter Assemblies: Check that these components mechanical indicators should be operating with red pop-up NOT showing. If filters become clogged, a message will be displayed on the Operators Control Console.	During the initial break-in period, the filter element changes will be more frequent due to the initial wear on the different components. Element condition should be closely monitored for the first 500 hours of operation. Inspect the filters while the fluid is at normal operating temperature. If the indicator is showing red (at normal operating temperature), replace the filter element. The condition of the Main Bearing, Main Gear, and Drive Pinions can be monitored by inspection of the elements in the return filter assemblies.

MAINTENANCE ITEM		NOTES
5.	**Gauges and Meters:** Inspect these components for proper functioning and abnormal indications.	
6.	**Indicator Lights:** Ensure that all are functioning properly (press to test).	
7.	**Breather Elements:** Check the breathers on the hydraulic reservoir.	Change the elements as required or at 500-hour intervals – whichever comes first.
8.	**All Systems:** Ensure that all systems are functioning properly.	Note and rectify any abnormal conditions.
9.	**Cutter Bits:** Check condition of every assembly.	
10.	**Lube Oil:** Monitor the flow and pressure during the machine operation.	Significant changes in flow or pressure indicate problems with the lube system - stop the machine and investigate! The lube oil pressure will vary inversely with the oil temperature; therefore, pressure will be greater during cold start-ups of the system. Seal deterioration will be accompanied by accelerated loss of lube oil.
11.	**Gear Reducers:** Check the flow indicators and the oil level window on each reducer.	
12.	**Seal Lube System:** Check for proper operation.	Ensure that the system is supplying enough oil to the inner and outer seals. Adjust the flow control valve as necessary to alter the output.
13.	**Segment Erector Assembly:** Inspect the assembly for worn, deformed, or malfunctioning components.	

6 Periodic Maintenance Schedule - Mechanical

NOTE:

The procedures in this guide are divided into daily, weekly, monthly, semi-annual, and annual operations. However, this is dependent upon the severity of the operation conditions during the given time period. Meters bored and hours of operation (per the hour meter) should be considered. As a rule, for maintenance purposes, 1 month is equal to 500 meters bored, or 250 hours of operation. Similarly, 1 week is roughly equal to 100 meters bored, or 50 hours.

6.1 Daily Maintenance

MAINTENANCE ITEM	NOTES
1. Hydraulic Fittings and Hoses: Visually inspect all accessible components for damage and/or leakage.	**WARNING** **Never attempt to repair a hydraulic hose or fitting while it is under pressure! Do not attempt to locate a leak with bare hands! High-pressure injection of oil through skin may result, causing severe injury!**
2. Cylinder Rods: Visually check for nicks or gouges.	Remove sharp edges before rod is retracted.
3. Cylinders: Check for leakage at rod packing glands.	Refer to the cylinder assembly drawing for seals and packing instructions.
4. Conveyor Belt, Belt Splice, and Rollers: Ensure that the belt is aligned properly and check for build-up of debris under the belt, particularly in the tail pulley area.	Clean as necessary. Check conveyor flashing for damage and proper position. The cleaning can usually be accomplished using high pressure water flushing. If this method is not effective, cleaning should be accompanied by using hand tools.
5. Fasteners in General: Visually check them for tightness. Spot check with wrenches if looseness is suspected.	Refer to drawing 5750 9900 17 for fastener torque values in this section.
6. Pressure Gauges: Check for damage and proper operation.	
7. Disc Cutter: Perform inspection.	Check for damages.

MAINTENANCE ITEM	NOTES
8. **Walkways, Guard Rails, and Ladders:** Check condition and proper installation.	
9. **Service Beams/Lifting Equipment:** Check condition of these components.	
10. **Water System:** Check the filter and clean as required. Check main drive assembly water flow and adjust as required. Check for leaks, faulty components, or other damage.	Refer to Water System Schematic.
11. **Conveyor Tension Cylinders:** Ensure that the needle valves remain closed when not in use.	
12. **Erector lifting mechanism:** Inspect for worn, deformed, or malfunctioning mechanism.	**WARNING** **A worn, deformed or malfunctioning mechanism could potentially lead to a loose or dropped segment!** This mechanism is critical to securely attach the segment sections to the erector.

6.2 Weekly Maintenance

MAINTENANCE ITEM	NOTES
1. Daily Check List: Perform checks as noted on list.	
2. Cutterhead: Visually inspect welded areas for cracks.	Clean bucket openings as required. Inspect system for damage.
3. Buckets: Visually inspect for excessive wear or damage to hard facing.	
4. Hydraulic Oil and Gear Oil: Take a small sample from each reservoir for chemical analysis. Any evidence of sludge or presence of water is cause for draining, cleaning, and refilling the reservoir.	Oil should be analyzed every 100 hours for the first 500 hours of operation and every 500 hours thereafter. Lube oil analysis is the primary indicator of the condition of the main bearing, main gear, and seal assemblies. High metal content may indicate gear or bearing damage and an influx of sand or water usually indicates seal leakage.
5. Grease: Apply grease at all grease fittings. (Except electric motors.)	Refer to Topic 13 & 14 for lubricant specifications.

6.3 Monthly Maintenance

MAINTENANCE ITEM	NOTES
1. Daily and Weekly Schedules: Perform checks as noted in the schedules.	
2. Pressure Gauges: Check their calibration.	
3. Hydraulic System: Verify proper adjustment of all valves and pressure switches.	
4. Lube System: Verify proper adjustment of all pressure and flow switches.	
5. Fixed-volume Pumps: Ensure proper output.	
6. Variable-volume Propel Pumps: Ensure that the output of the pumps can be adjusted from zero to maximum.	

MAINTENANCE ITEM		NOTES
7.	**Conveyor System:** Check for wear or damage; clean enclosed conveyor areas, and check troughing and return rollers. Replace components as necessary.	
8.	**Structural Fasteners:** Check all fasteners on the machine's major assemblies.	Refer to drawing 5750 9900 17 for fastener torque values.
9.	**Filter Elements:** Check and replace (if necessary), all elements in the lube and hydraulic systems. Replace the breather elements on the hydraulic reservoir and the lube reservoir.	The condition of the Main Bearing, Main Gear, and the Drive Pinions can be monitored by inspection of the elements in the return filter assemblies.
10.	**Connecting Pins and Keepers:** Check all connecting pins and keepers on the cylinders and hinged devices.	

6.4 Semi-annual Maintenance

MAINTENANCE ITEM		NOTES
1.	**Hydraulic Fluid:** Replace if the test results warrant.	
2.	**Replacing Hydraulic Fluid:** If the fluid is being replaced, flush and clean the reservoir and magnetic suction strainers and check operation of float switch.	
3.	**Lube Oil Reservoir and magnetic Suction Strainer(s):** Drain, clean and check the float switch for proper operation.	
4.	**Main Bearing & Main Ring Gear Teeth:** Check the condition of each by removing one Main Drive Assembly.	
5.	**Hydraulic Cylinders:** Check the condition of the rod wipers.	

MAINTENANCE ITEM	NOTES
6. Pivot Points, Swivels, and bushings: Check for looseness or wear.	
7. Fasteners: Check for proper torque.	Refer to drawing 5750 9900 17 for proper torque values.
8. Accumulators: Check the nitrogen charge in every unit.	Refer to the Hydraulic Schematic for proper charge pressures.
9. Pump Couplings: Lubricate.	

6.5 Annual Maintenance

MAINTENANCE ITEM	NOTES
1. Remove & disassemble gear reducers.	
2. Check for possible wear and movement of the main bearing.	If practical, remove cutterhead and check rolling torque, per main bearing procedure

7 Periodic Maintenance Schedule - Electrical

NOTE:

The procedures in this guide are divided into daily, weekly, monthly, semi-annual, and annual operations. However, this is dependent upon the severity of operation conditions during the given time period. Meters bored and hours of operation (per hour meter) should be considered. As a rule, for maintenance purposes, 1 month is equal to 500 meters bored, or 250 hours of operation. Similarly, 1 week is roughly equal to 100 meters, or 50 hours.

WARNING

Only qualified electricians must do servicing of electrical equipment. Power must be locked out before repair or servicing the equipment to avoid electrical shock or unintentional actuation of the machine or accessories.

Hazardous voltages are present within the electrical cabinet when the incoming power cable is connected and energized. Trained and qualified electricians must make adjustments to systems parameters within electrical cabinets and enclosures.

For additional safety precautions, see Safety Considerations in the front of this manual.

7.1 Daily Maintenance

MAINTENANCE ITEM	NOTES
1. **Meters:** Check for damage and for proper functioning.	
2. **Lighting Fixtures:** Check the condition of all lighting units.	
3. **Electrical Cables:** Visually inspect all accessible cables for damage. Pay particular attention to cables that must move with the machine, are routed through cable reels, or otherwise are subjected to wear or damage.	

MAINTENANCE ITEM	NOTES
4. Secondary Voltage: Verify that the voltage is at the proper level.	
5. Electrical Cabinets: Visually inspect each cabinet interior for loose terminals.	Ensure that the doors are kept closed.
6. Starters and Circuit Breakers: Visually inspect for signs of deterioration or corrosion.	Determine and eliminate the cause of dirt entering the sealed enclosures(s). Dirty, wet, or corroded parts must be replaced if they cannot be cleaned effectively.
7. Main Drive Motors: Visually inspect condensation drain ports for restriction.	
8. Quick-disconnect Couplers: Visually inspect that all are tight.	
9. Auxiliary Boxes: Visually check that all boxes are closed.	
10. Mechanical Linkages: Visually check that mechanical linkages for the oil fuse cutouts are satisfactory.	Check for free operation of all moving parts. Replace any badly worn or damaged parts. Do not lubricate electrical control equipment unless specifically instructed to do so by the manufacturer's instructions.
11. Emergency Stop Circuits: Verify that the emergency stop (E-Stop) switches are functional.	**⚠ WARNING** **Never bypass any emergency stop switches.**
12. Electrical Controls: Verify that all controls are functioning properly.	

7.2 Weekly Maintenance

MAINTENANCE ITEM	NOTES
1. Daily Schedule: Perform checks as listed on daily schedule.	
2. Electrical Cabinets: Clean their interiors.	
3. Door Seals: Ensure that all cabinet and enclosure door seals are in good condition.	
4. Electric Motors: Clean their exteriors.	Use dry compressed air.

MAINTENANCE ITEM	NOTES
5. **Conveyor Speed Switch:** Check for loose mounting, muck accumulation and exposed wiring.	
6. **Terminals:** Ensure that all bolted electrical terminals are tight and free of corrosion.	Replace any parts damaged by overheating due to loose connections.
7. **Miscellaneous:** Verify proper functioning of ground fault systems, insulation monitors, and other parts.	

7.3 Monthly Maintenance

MAINTENANCE ITEM	NOTES
1. **Electrical Meters:** Check their calibration.	
2. **Connections:** Check all switches and interior of electrical control panels for loose connections.	
3. **Contacts:** Check all contacts for extensive wear and dirt accumulation.	Do not file contacts – discoloration and slight pitting is not harmful to silver oxide contacts used in most industrial equipment. Replace contacts in complete sets to avoid uneven contact pressure.
4. Verify condition of contacts in all switch gears.	

7.4 3 – Month Maintenance

MAINTENANCE ITEM	NOTES
1. **Motors:** Re-lubricate all electrical motors.	Refer to manufacturer's literature for lubrication instructions.

7.5 Semi-annual Maintenance

MAINTENANCE ITEM	NOTES
1. **Jackets:** Check all cable terminations and cables for damaged jackets.	

MAINTENANCE ITEM	NOTES
2. Electrical Devices: Thoroughly inspect and clean circuit breakers, starters, auxiliary contacts, relays, and others.	
3. Motor Junction Box Covers: Ensure good condition of bolted connections.	

7.6 Annual Maintenance

MAINTENANCE ITEM	NOTES
1. Main Drive Motors: Remove and send to qualified electrical shop for thorough testing and reconditioning. Bearings should be replaced.	
2. Auxiliary contacts: Replace, in circuit breakers and starters.	

8 Corrective Maintenance

Corrective maintenance is isolating a malfunctioning component and then repairing or replacing the item. The troubleshooting and correction of malfunctions can be a time-consuming process. The following is offered as a guide to speed up the process.

8.1 General Troubleshooting Guide

The troubleshooting of any problem should be approached in an analytical, open-minded manner.

The troubleshooting suggestions described below are intended primarily for hydraulic malfunctions; however, these suggestions could apply to other malfunctions, too. These suggestions are intended to help the troubleshooter save time and avoid unnecessary replacement of parts.

8.1-1 Define the Problem

A clear definition of the problem is essential to make effective and efficient corrections. As an aid in making this definition, the following questions should be considered:

1. What abnormal actions are occurring, or have occurred?

2. What abnormal indications are present?

3. Did the malfunctions occur gradually or suddenly?

4. Is there any physical evidence of a component or assembly failure?

8.1-2 Isolate the Malfunctioning Item

Determine, by logical process of elimination, which component would most likely cause the defined problem. Formulate a plan of action before disassembly of the equipment is started. The following are suggestions for formulating this logical plan of action:

1. Refer to the schematics, other drawings, or technical literature to determine which components is involved in the malfunction.

2. Based on the clear definition of the problem; determine which component or components would be most likely to cause the noted problem.

3. If possible, isolate or bypass the most likely component and recheck the function of the machine. If the operation is satisfactory with the suspected component isolated, the malfunctioning component has been identified. If the problem still exists, proceed to the next most likely component on the list.

4. Do not overlook a simple solution just because it appears too simple.

8.1-3 Correct the Malfunction

1. If possible, determine what caused the component to fail. There may be another system fault that caused the failure. Merely repairing an item may affect a temporary cure while leaving the basic ailment to cause future failures.

2. Correct any contributing malfunctions.

3. If practical, repair the defective component; otherwise replace it.

4. Retest the system to confirm proper operation.

8.2 Troubleshooting the Hydraulic System

Hydraulic systems are precision units and their smooth operation depends on proper care. Therefore, DO NOT NEGLECT THEM. Keep them clean and change oil and filters elements at established intervals.

In spite of precautions taken, improper operation does occur. Cause can generally be traced to one of the following:

- Use of wrong viscosity type of oil.
- Insufficient fluid in the system.
- Presence of air in the system.

- Mechanical damage or structural failure.
- Internal or external damage.
- Dirt, decomposed packing, water, sludge or rust in the system.
- Improper adjustments.
- Oil cooler plugged, dirty or leaking.
- Improper pressure setting.

8.3 Troubleshooting Guide - Mechanical Malfunctions

A troubleshooting guide is included in this section of the manual to assist in locating malfunctions. The malfunctions are listed in the left-hand column, the most probable causes listed in the center column, and the corrective action to be taken listed in the right column. An accurate record should be maintained of all adjustments, parts replacements, or non-corrected erratic/abnormal operations.

NOTE:

In cases where more than one possibility exists for a particular malfunction, an attempt has been made to list the possibilities in order of most to least likely.

MALFUNCTION	POSSIBLE CAUSE	CORRECTIVE ACTION
1. Pump does not produce flow.	Pump suction line shut-off valve is closed.	Open immediately.
	Low fluid level in the reservoir. This condition will be accompanied by noisy pump operation due to cavitation. **DO NOT ALLOW OPERATION TO CONTINUE!**	Stop the pump immediately. Check fluid level and fill to the proper level.
	Pump/motor coupling is loose or broken.	Check and repair or replace as needed.
	Incorrect rotation of the pump. **DO NOT ALLOW OPERATION TO CONTINUE!**	Have an electrician reverse two phases to the pump drive motor.

MALFUNCTION	POSSIBLE CAUSE	CORRECTIVE ACTION
Pump does not produce flow. (Ctd.)	Fluid viscosity is too high to permit the pump to prime itself.	Normally, this condition would exist only in low ambient temperature conditions. Grade of oil may have to be changed, or pre-heating of the oil may be required before starting the pump motors.
	Suction strainer or inlet line is plugged.	Remove the pump inlet line connection and check for flow. If low, drain the reservoir, clean the reservoir and suction strainers, and refill with new fluid.
	On variable-volume pumps, stroke or stroke limits are not set properly.	Check for proper adjustment of pump.
	Pump is damaged internally--broken shaft or stroke limits are not set properly.	Remove the pump and inspect its interior. (See manufacturer's information.)
2. Pump will not develop pressure.	Pump is not producing flow.	Check according to preceding malfunction.
	Disconnected or broken hose on the pump's output side.	Verify that all hoses are intact.
	One or more directional valves in the system allowing free return flow to the reservoir.	Determine which valves are in the particular system and check that each is in the proper position and functioning correctly.
	Relief valve(s) is (are) set too low or it is stuck open.	Determine which relief valves affect the system. Check for proper setting; disassemble if necessary to check internally.

MALFUNCTION	POSSIBLE CAUSE	CORRECTIVE ACTION
Pump will not develop pressure. (Ctd.)	Pump is damaged internally: it will produce flow at low pressures, but not under load.	Remove pump and disassemble to inspect interior. Repair or replace damaged parts as required.
3. Noisy pump operation.	Pump is cavitating due to low fluid level in the reservoir.	Stop immediately, check the fluid level, and fill to proper level.
	Pump is cavitating due to leakage in the inlet connection.	Stop immediately, check, and tighten the inlet fittings.
	Inlet to the pump is blocked.	Check to make sure that the inlet shut-off valve is open. Check to make sure that it is not blocked - may be due to plugged suction strainer.
	Reservoir's air breather is blocked.	Check and replace the element.
	Pump rotation is incorrect.	Correct the rotation of the drive motor. If still noisy, the pump has suffered damage.
	Pump is damaged internally.	Remove the pump and inspect its interior. Repair or replace as required.
4. Excessive hydraulic fluid temperature.	Propel pump pressure compensator is set too high, causing excessive flow over the propel pressure relief valve.	Adjust pump compensator until flow is correct. Direct cooling water through the heat exchanger to lower the temperature.
	Excessive slippage in the high pressure pump.	Check the pump's output using a test unit if possible.
	Pressure compensator is not adjusted properly or is malfunctioning (gripper high-pressure system).	Check that the gripper pressure is correct; the pressure should be slightly less than the relief valve

MALFUNCTION	POSSIBLE CAUSE	CORRECTIVE ACTION
		setting.
5. Belt conveyor is too slow.	Conveyor is partially jammed due to excessive loading or blockage.	Check the operating pressure. If the pressure is at the relief valve setting, fluid is bypassing over the relief. Stop the cutterhead and the conveyor and determine if blockage exists. Correct the condition. Allow the belt to clear before re-starting cutterhead.
	Belt is too tight.	Check the operating pressure at the tensioning cylinder pressure. Correct as necessary.
	Full fluid flow is not being delivered to the conveyor's hydraulic drive.	Verify that the valve is operating properly. Check the pump's output.
	Hydraulic motor is bypassing internally.	Remove and inspect the interior. Repair or replace as needed.
6. Cutterhead drive motors will not start.	Circuit breakers are off.	Turn on the circuit breakers.
	Low lube oil flow or pressure.	Check for proper flow and pressure.
	Lube oil flow switch is set incorrectly or malfunctioning.	Have a qualified electrician inspect the switch and its connections.
	Gripper pressure switch is set incorrectly or malfunctioning.	Check the pressure setting. If it is satisfactory, have a qualified electrician inspect the circuitry.

MALFUNCTION	POSSIBLE CAUSE	CORRECTIVE ACTION
7. Hydraulic drive motors, or lube oil drive motor will not start.	Circuit breakers are turned off.	Turn on the circuit breakers.
	Low fluid level in the reservoir.	Fill the reservoir to the proper level.
	Float switch is set incorrectly or not functioning properly.	Check for proper operation and have a qualified electrician inspect the circuit.
	Overloads on motor starter are tripped.	Have a qualified electrician reset. If they are not tripped, check the circuitry.

8.4 Main Thrust Bearing or Ring Gear Replacement

The possibility for having to replace either of these items in the tunnel is quite remote; however, consideration must be given to the method for accomplishing this.

As with outer seal or seal ring replacement, the cutterhead assembly must be removed and secured against movement to permit access to these items.

A cavity or niche must be made in the wall of the tunnel to allow enough space to pass the defective item to the rear as well as to allow the replacement parts to be moved to the forward side of the cutterhead support. Additionally, the machine must be able to move a sufficient distance forward and aft to permit the passage of the components.

Sufficient hoisting mechanisms must be provided to allow disassembly of the defective units and re-positioning of the replacement parts. It may be necessary to remove rock from the crown of the tunnel to create space for positioning and operation of the hoisting mechanisms.

Corrective action in this circumstance is a major operation, hampered by the confines of the tunnel. Therefore, plans for accomplishing the task should be well formulated to avoid as much delay as possible. One of the prime considerations is maintaining the cleanliness of the new parts and the exposed structural surfaces to which they mount.

8.5 Conveyor Belt Alignment

To attain the maximum conveyor belt life, ensure that the belt is constantly centralized on all conveyor rollers. If the belt is allowed to move to one side or the other where the edge is in contact with the conveyor structure, fraying of the edges will occur quickly.

Moreover, this contact causes additional belt friction that must be overcome by the drive pulley. The following items describe some of the typical belt misalignment conditions along with the probable cause and the suggested corrections.

8.5-1 If the entire length of the belt runs off through a particular section of the conveyor assembly, the likely cause is misalignment of the idlers or pulleys in that area. To correct this condition, the end of the idler or pulley where the belt is shifting should be moved longitudinally in the same direction the belt is traveling.

8.5-2 If one or more points of the belt run off for the entire length of the conveyor, the cause is most likely to be the belt itself or the splicing of the belt. Verify that the splice was installed properly. Another cause can be uneven or off-center loading of the belt. This condition will cause the belt to move to one side as the load tries to center itself in relation to the troughing rollers. Off-center loading is not normally a problem due to the muck chute's configuration.

8.5-3 All pulleys and idlers should have their axis 90 degrees to the intended path of the belt. Only minimum shifting at one end of a particular roller should be necessary.

8.5-4 Normally, the belt can be trained properly to the tail pulley by proper adjustment of the return idlers. However, adjusting devices are provided at the tail pulley if some alignment is necessary. Once centralized on the tail pulley, the troughing rollers, assuming they are aligned correctly, will normally train the belt properly. No adjustment of the head pulley should be required if the belt has been trained properly.

8.5-5 Periodic cleaning of the area below the conveyor is necessary to prevent build-up of dirt or other debris. Debris can affect the action of the return idlers, or otherwise upset the free movement of the conveyor belt.

9 Cutter Inspection Guide

The cutter assemblies are the key units to successful operation of the machine. A proper inspection program is mandatory to achieve the maximum service life from these expendable items. It is suggested that the following inspection program be implemented:

9.1 Perform visual inspection of the cutters every four hours of operation for the initial 500 feet (150 meters) of boring.

9.2 If the inspections accomplished during the initial 500 feet (150 meters) warrant, the inspection may be extended to a daily basis. However, normal practice is to make a cutter check once each shift.

9.3 If the sudden loss of a cutter is indicated during actual boring (e.g., reduced penetration, increased amperage), boring should be stopped immediately and a cutter inspection should be performed.

9.4 Replace cutters if any of the following conditions are noted:

9.4-1 Excessive Ring Wear
Average maximum recommended wear for gage cutters is 1/2 inch (13) mm) from the radius. However, this can vary as much as 1/4 inch, depending on the machine's structure and tunnel requirements. The proper allowable wear should be determined in the initial stages of the boring process. Gage cutters reaching the maximum wear limit may be moved to face positions to attain maximum ring life. Maximum wear for face positions can be described as that amount of wear that does not cause damage to the cutter hub, saddles, etc., and does not seriously affect the penetration rate.

9.4-2 Uneven Ring Wear, Flat Spots, Will Not Rotate, Rough Rotation. Any of these conditions are indicative of failed or badly worn bearings. Muck build-up under the cutter assembly may be another cause for the condition(s).

9.4-3 Loss of Split Ring
Remove cutter and replace split ring.

9.4-4 Oil Leakage
Remove the cutter and send it to the cutter repair shop for determination of cause of leakage. Do not attempt to refill cutter while on the cutterhead.

10 Cutterhead Inspection Guide

The cutterhead assembly should be checked at each cutter inspection as follows:

10.1 Check fasteners common to the cutter assemblies, and check all accessible fasteners common to the cutterhead assembly for proper torque.

10.2 Check welds in general.

10.3 Check water spray nozzles for damage or plugging, and check that all protective angle irons for water spray system hoses are in place.

11 Lubrication Schedule

NOTE:

1. **Hours shown in the following chart are actual machine operating hours (per the hour meter).**

2. **Lube oil viscosity is dependent on operating temperature – see temperature vs. viscosity chart on Typical Fluid Specifications in Topic 12.**

3. **Volumes are approximate values.**

ITEM	SERVICE INTERVAL	QUANTITY PER UNIT	LUBRICANT
Lube Oil System (See Note 2)	Check every 8 hours	Approximately 800 liters	A
Hydraulic System	Check every 8 hours	4,500 liters	B
Grease Fittings	Grease every 40 hours	As required	C
Exposed Steel and Adjusting Screws	As needed to prevent rusting	As required	A or B
Electric Motors	See motor literature	See motor literature	See motor literature
Flushing Hydraulic System	As necessary	As required	D
Conveyor Drive Assembly	Check every 8 hours	See grease fittings above	C
Contact surface of erector ring gear and pinion.	Grease every 40 hours	As required	C
Over cutter	Grease every 40 hours	As required	C
Cutterhead Seal Assembly	Check every 8 hours	See Lube System above	B

12 Typical Fluid Specifications

NOTE:
Texaco furnishes the following specifications. They can be used as a guideline for determining the suitability of alternate brands of lubricants not shown in the Lubrication Schedule (Topic 11) and in the Lubricant Approval Chart (Topic 14).

TEXACO DESIGNATION	**MEROPA 220**	**RANDO HD-46**	**RANDO HD-32**	**MEROPA 320**
TYPE OF FLUID	GENERAL OIL	HYDRAULIC OIL	HYDRAULIC OIL	GENERAL OIL
APPEARANCE	VERY DARK RED	PALE	LIGHT BROWN	VERY DARK BROWN
GRAVITY, API	26.2	30.3	31	25.3
FLASH COC, °F/°C	450/232	415/213		450/232
POUR POINT, °F/°C	0/-18	-30/-34	-30/-3	0/-18
VISCOSITY CENTISTOKES **At 40°C** **At 100°C**	 209 17.5	 43.3 6.6	 29.7 5.2	 308 23.9
VISCOSITY, SUS **At 100°F** **At 210°F**	 1080 90	 223 49	 153 44	 1636 118
VISCOSITY INDEX	92	102	107	98
PERCENT SULFUR	.92	--	--	.93
PERCENT PHOSPHOROUS	.05	--	--	.05
TIMKEN OK LOAD, LBS	60	--	--	60
AGMA EP NUMBER	5	--	--	6

13 Typical Grease Specifications

NOTE:
Texaco furnishes the following specifications. They can be used as a guideline for determining the suitability of alternate brands of lubricants not shown in the Lubrication Schedule (Topic 11).

CHARACTERISTICS	TEXACO PRODUCT DESIGNATION		
	MARFAK ALL-PURPOSE	MOLYTEX EP2	MULTIFAK EP0
APPEARANCE	VERY DARK GREEN	GRAYISH BLACK	DARK GREEN
LITHIUM SOAP, %	6.0	7.8	4.0
MOLYBDENUM DISULFITE, %	--	3.0	--
LEAD, % (ASPbO)	.3	.36	.3
PENETRATION, ASTM at 77°F (25°C) UNWORKED WORKED	 295 281	 290 281	 398 378
DROPPING POINT, °F/°C	390/199	392/199	367/186
OIL VISCOSITY, CENTISTOKES at 40°C at 100°C	 195 15.6	 175 15.1	 195 15.6
OIL VISCOSITY, SUS at 100°F at 210°F	 1043 82	 918 80	 1043 82
GUIDE TO USEABLE TEMPERATURE MAXIMUM, °F/°C MINIMUM, °F/°C CONT. TEMP, °F	 350/177 -30/-34 250	 250/121 -23/-30.5 250	 350/117 -30/-34 250

MODEL EPB2016-376/377
SECTION 4 • General assembly

1. General EPB layout drawing

2. Weights and Dimensions

QTY. -1	PART No.	DESCRIPTION	WT. EA. kg	MATERIAL	ITEM

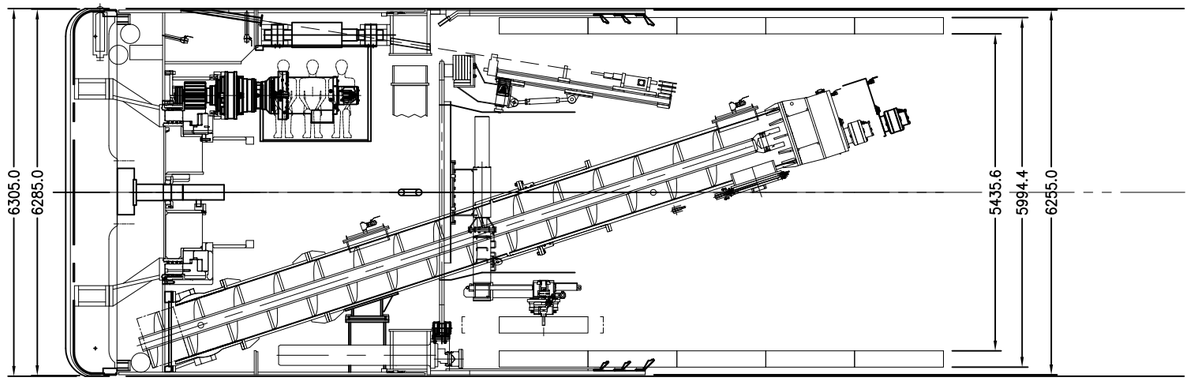

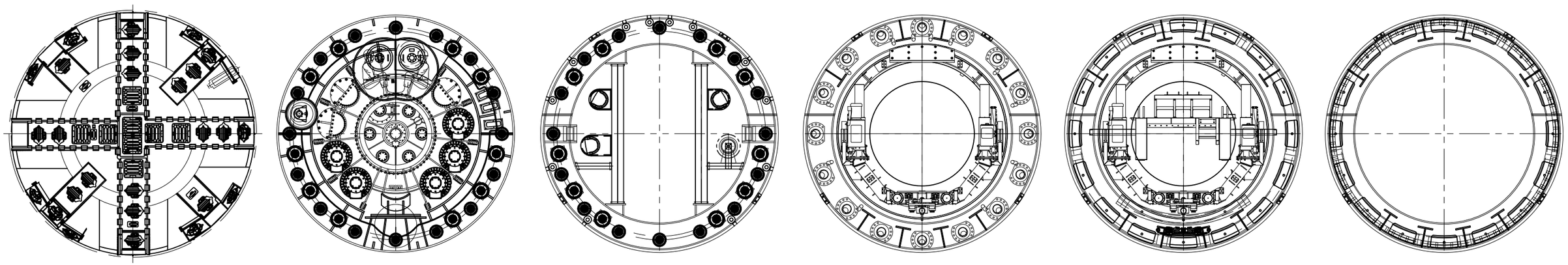

P4819

PROPRIETARY NOTICE

The information disclosed hereon, is the sole property of The Robbins Company, and remains their sole property. It shall not be duplicated in full or part, used by, or disclosed to any other party without the prior written consent of The Robbins Company. By accepting this information, recipient agrees to abide in total with this notice, without any modification whatsoever to the conditions. This material is on loan only, and is to be returned upon request to The Robbins Company.

REV	DESCRIPTION	ZONE	BY/DATE

TOLERANCES UNLESS NOTED

FAB (mm)	
0–300	±1.5
300–1500	±3
1500–6000	±6
6000+	±12

FLAME CUT STD/CLASS

WELDING STD/CLASS

MACHINING (mm)	
X	±1.5
X.X	±1.0
X.XX	±.40
X.XXX	±.100
ANGLES	±1 °
SURFACE FINISH	3.2

MACHINING STD/CLASS

MACHINE | NEXT ASSY

UNLESS NOTED, ALL DIM'S ARE mm

DO NOT SCALE

THIRD ANGLE PROJECTION

ALL GEOMETRIC DIMENSIONING AND TOLERANCING PER ISO R1101 – 1983

DIMS (X) ARE REF

SCALE 1:50

TITLE

SIZE D | DWG No | REV | SHT 1 OF 1 | ORIGIN Solon Kent Oak Hill RC

Phone: (440) 248-3303
Fax: (440) 248-1702

Robbins
THE ROBBINS COMPANY
29100 Hall Street
Solon, Ohio 44139 USA

Kent, WA:
Phone (253) 872-0500
Fax: (253) 872-0199
Oak Hill, WV:
Phone (304) 465-5880
Fax: (304) 465-5886

DRAWN DATE | CHECKED DATE

QTY. -1	PART No.	DESCRIPTION	WT. EA. kg	MATERIAL	ITEM

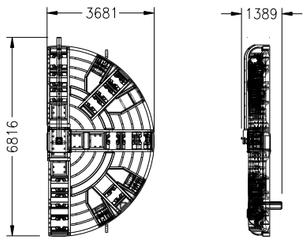

CUTTERHEAD RIGHT HAND
27724 KG

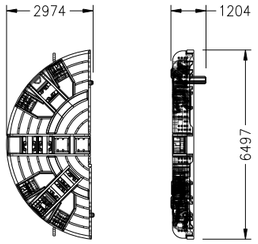

CUTTERHEAD LEFT HAND
20063 KG

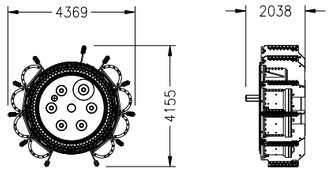

CUTTERHEAD SUPPORT ASSEMBLY
40545 KG

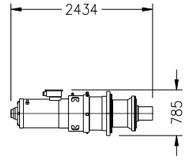

DRIVE MOTOR & GEARBOX ASSY (QTY 6)
2600 KG

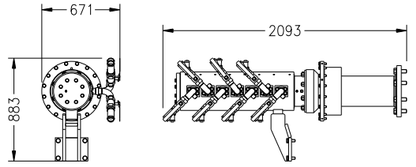

ROTARY UNION
1211 KG

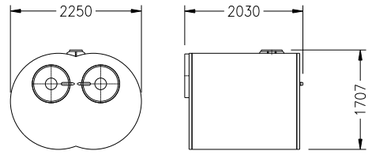

MANLOCK
8615 KG

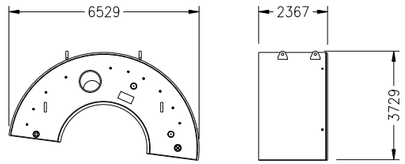

FWD SHIELD, RING A UPPER
8588 KG

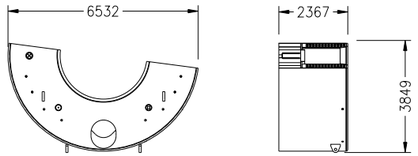

FWD SHIELD, RING A LOWER
25538 KG

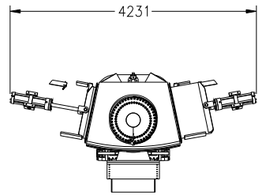

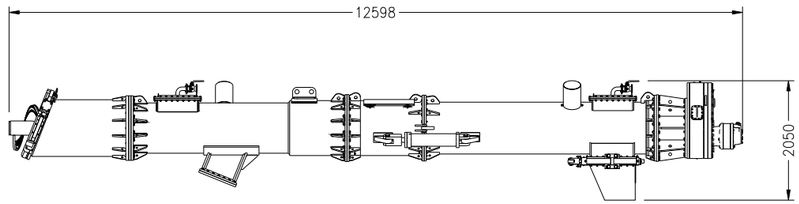

SCREW CONVEYOR ASSEMBLY
26570 KG

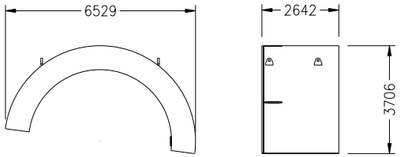

FWD SHIELD, RING B UPPER
15007 KG

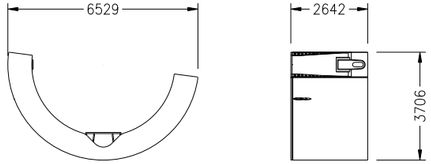

FWD SHIELD, RING B LOWER
15611 KG

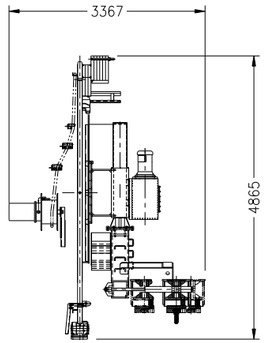

SEGMENT ERECTOR ASSEMBLY
WEIGHT: 15448 KG

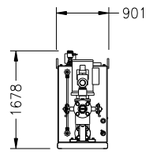

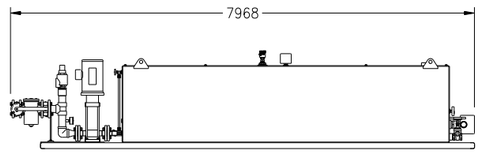

VFD RESERVOIR ASSEMBLY
529 KG

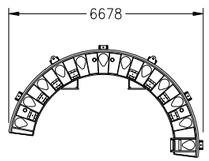

REAR SHIELD, RING C UPPER
14349 KG

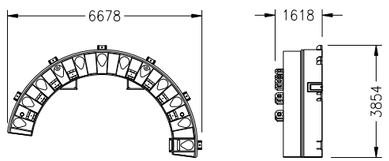

REAR SHIELD, RING C LOWER
14349 KG

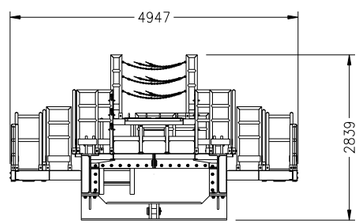

REAR SCAFFOLDING
7168 KG

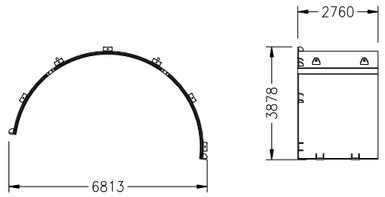

REAR SHIELD, RING D UPPER
15938 KG

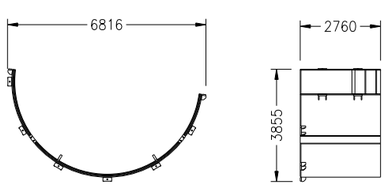

REAR SHIELD, RING D LOWER
15858 KG

2	1
1	1
SHT	REV

REV	DESCRIPTION	ZONE	BY/ DATE
1	REVISED DIMENSION ON SHT 2		RF 01/26/12

PROPRIETARY NOTICE
The information disclosed hereon, is the sole property of The Robbins Company, and may not be reproduced, it shall not be duplicated in full or part, used by, or disclosed to others for any purpose without the written consent of The Robbins Company. By accepting this information, the recipient agrees to abide in total with this notice. Unless otherwise agreed to in writing by The Robbins Company, this material is on loan only, and is to be returned upon request.

TOLERANCES UNLESS NOTED	
FAB (mm)	
0–300	±1.5
300–1500	±3
1500–6000	±6
6000+	±12
FLAME CUT SSD/CLASS	
WELDING SSD/CLASS	
MACHINING (mm)	
x	±1.5
x.x	±1.0
x.xx	±.40
x.xxx	±.100
ANGLES	±1 °
UNLESS OTHERWISE NOTED, ALL DIMENSIONS ARE SHOWN IN mm	
MACHINING SSD/CLASS	

MACHINE	NEXT ASSY
EPB2110-365	D123001
W/O#	
DO NOT SCALE	
THIRD ANGLE PROJECTION	
ALL GEOMETRIC DIMENSIONING AND TOLERANCING PER: ISO R1101 – 1983 DIMS (X) ARE REF	SCALE 1:100

TITLE
WEIGHTS AND DIMENSIONS

SIZE	DWG No	REV	SHT	ORIGIN
D	1045313	1	1 OF 2	☐ Solon ☒ Kent ☐ Oak Hill

DRAWN	CHECKED
R.FINE	J.HEINEMAN
DATE 1/16/11	DATE 01/09/12

Robbins
THE ROBBINS COMPANY
29100 Hall Street
Solon, Ohio 44139 USA
Kent, WA:
Phone (253) 872-0500
Fax: (253) 872-0199
Oak Hill, WV:
Phone (304) 465-5880
Fax: (304) 465-5886
Phone: (440) 248-3303
Fax: (440) 248-1702

1045313

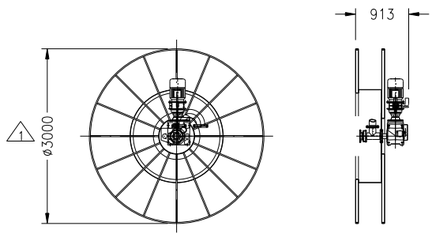

HOSE REEL ASSEMBLY
800 KG

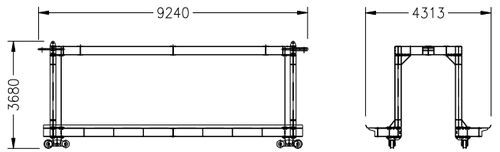

GANTRY (QTY 8)
8478 KG ea.

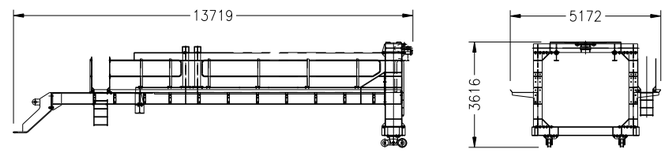

BRIDGE – FWD SECTION
15895 KG

QTY. -1	PART No.	DESCRIPTION	WT. EA. kg	MATERIAL	ITEM

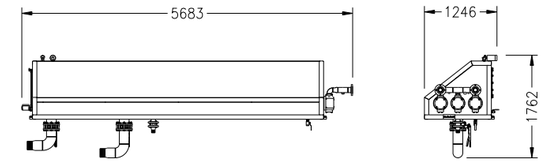

HYDRAULIC TANK
1545 KG

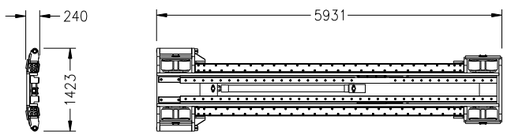

SEGMENT FEEDER ASSEMBLY
5195 KG

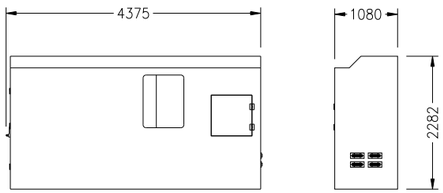

OPERATOR'S CAB
1520 KG

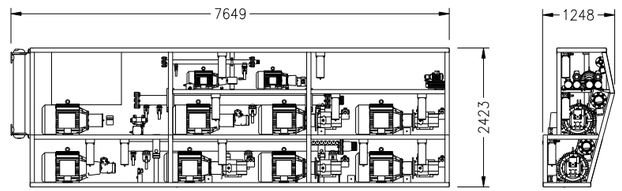

HYDRAULIC POWER UNIT
8924 KG

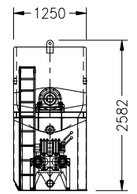

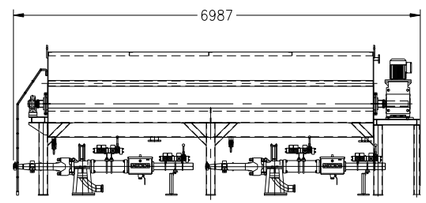

GROUT TANK
3374 KG

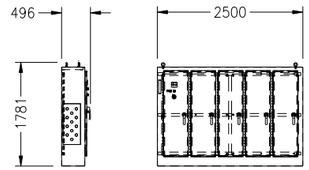

ELECTRICAL CABINET LH ASSEMBLY
980 KG

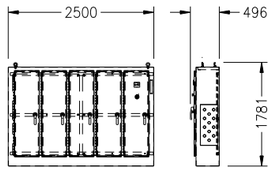

ELECTRICAL CABINET RH ASSEMBLY
980 KG

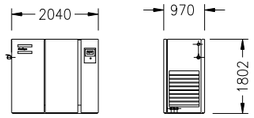

AIR COMPRESSOR – QTY(2)
1,300 KG ea.

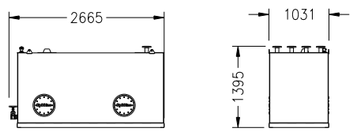

DE-WATERING TANK
1181 KG

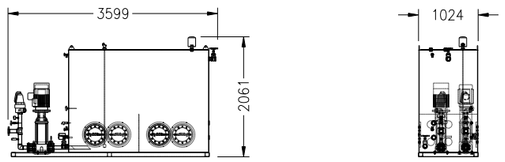

WATER TANK
1715 KG

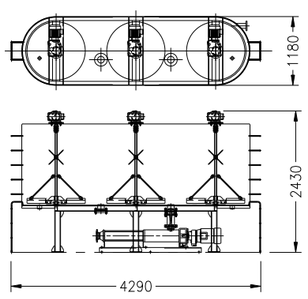

ADDITIVE TANK
1341 KG

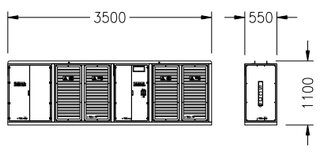

TRANSFORMER
7325 KG

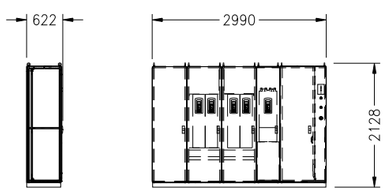

VFD PANEL – QTY(2)
1120 KG ea.

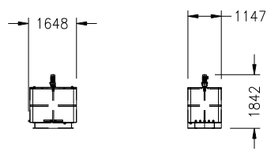

FOAM SOLUTION TANK
502 KG

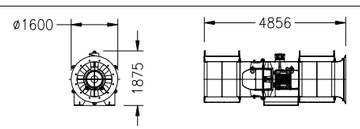

VENTILATION FAN
404 KG

REV	DESCRIPTION	ZONE	BY/ DATE
1	REVISED HOSE REEL DIMENSION		RF 01/26/12

PROPRIETARY NOTICE

The information disclosed hereon, is the sole property of The Robbins Company and may not be used, copied, or otherwise reproduced in full or part, used by, or disclosed to others without the written consent of The Robbins Company. By accepting this information, the recipient agrees to abide in toto with the notice contained herein. Upon request by The Robbins Company, this material is on loan only, and is to be returned to The Robbins Company.

TOLERANCES UNLESS NOTED	
0–300	±1.5
300–1500	±3
1500–6000	±6
6000+	±12
FLAME CUT SID/CLASS	
WELDING SID/CLASS	
MACHINING (mm) X	±1.5
X.X	±1.0
X.XX	±.40
X.XXX	±.100
ANGLES	±1 °
UNLESS OTHERWISE NOTED, ALL DIMENSIONS ARE SHOWN IN mm	
MACHINING SID/CLASS	

MACHINE	NEXT ASSY
EPB2110-365	D123001
W/O#	
DO NOT SCALE	
THIRD ANGLE PROJECTION	
ALL GEOMETRIC DIMENSIONING AND TOLERANCING PER ISO R1101 – 1983 DIMS (X) ARE REF	SCALE 1:100

TITLE

WEIGHTS AND DIMENSIONS

SIZE	DWG No	REV	SHT	ORIGIN
D	1045313	1	2 OF 2	☐ Solon ☒ Kent ☐ Oak Hill

Phone: (440) 248-3303
Fax: (440) 248-1702

THE ROBBINS COMPANY
29100 Hall Street
Solon, Ohio 44139 USA

Kent, WA:
Phone (253) 872-0500
Fax: (253) 872-0199

Oak Hill, WV:
Phone (304) 465-5880
Fax: (304) 465-5886

DRAWN R.FINE DATE 1/16/11

CHECKED J.HEINEMAN DATE 01/09/12

1045313

MODEL EPB2016-376/377
SECTION 5 • Cutterhead Assembly

1. Cutterhead Submittal
2. Cutterhead assembly drawing
3. Disc cutter installation drawing
4. Knife bit installation drawing
5. Cutterhead weldment drawings

San Francisco Central Subway - Cutterhead Design Submittal

Cutterhead selection

The mixed geology of the San Francisco Central Subway project required the cutterhead to be designed to use both disc cutters and soft ground cutting tools. Disc cutters are intended to be used in geology with UCS > 20MPa, while the soft ground cutting tools should be used in geology with UCS <20MPa or in soft ground conditions where the UCS measurement is not applicable. In addition to the soft ground cutting tools and disc cutters, scrapers are installed along the main ribs of the cutterhead structure to direct the excavated material into the mixing chamber. The cutterhead has an opening ratio of 31% to allow the excavated material to flow easily into the mixing chamber. Grill bars are included on the cutterhead openings to limit the size of rocks that enter the mixing chamber. The grill bar spacing is set at 330mm, which will allow all ingested material to be removed by the screw conveyor. These features can be seen on the attached drawing (1035758) from a previous project that was also used for mixed ground excavation. The San Francisco Central cutterhead will be very similar to this design, only at a new diameter selected specifically for this project. Additionally, the grill bars are not shown on the previously mentioned reference drawing, so the initial pages of the cutterhead weldment drawings (1036099 & 1036100) for the San Francisco project attached to show the grill bar configuration.

Cutting tools

The disc cutter spacing profile is based on the same principle that is used for hard rock machines, which allows the cutterhead to excavate rock conditions much higher than anticipated on the Central subway project. The disc spacing is set at 3.5” for the face cutters, and gradually reduces to less than 1 inch for the outermost gage cutters. The disc cutters have been designed with a low rolling torque to minimize the chances of clogging when mining in mixed ground conditions.

For soft ground sections of the tunnel, replaceable soft ground cutting tools can be installed in the same cutter housings as the disc cutters. These cutting tools consist of high strength alloy steel shanks with tungsten carbide inserts for extremely good wear characteristics. The main purpose of these tools is to loosen the material from the tunnel face, and allow the scrapers to direct the material into the mixing chamber.

Design and construction

This cutterhead design is typical mixed face design for the Robbins Company, and has been validated with finite element modeling, as well as the experience of previous machines in similar mixed ground conditions. The structural material of the cutterhead is ASTM A572 Gr. 50 steel, which was selected for its excellent weldability and resistance to cracking. All plates are subjected to ultra-sonic testing to verify the integrity of the structure. All welds are full penetration welds where possible, and are performed and tested according to the latest version of the American Welding Society structural welding code. After the structural welding has been completed, the cutterhead is subjected to a stress relief procedure to minimize the residual stresses from the welding process.

Wear protection

In order to preserve the integrity of the cutterhead structure throughout the mining operations, the cutterhead utilizes a combination of Hardox wear plates, hard-facing, and tungsten carbide protection blocks. 20mm thick Hardox wear plates cover the entire front face of the cutterhead for general wear protection, while additional carbide protection blocks are included in especially high wear areas such as the corners of disc cutter housings, and the outer structural ring. Less critical wear areas can easily be protected with the use of hard-facing wire, such as on the cutterhead pedestal. These wear materials can be seen on the attached reference drawing.

Plumbing

The cutterhead is equipped with plumbing to allow for ground conditioning directly to the tunnel face, as well as the copy cutter and wear detector hydraulic lines. All plumbing pipes are located beneath the main ribs of the cutterhead structure to ensure that they are damaged by the material inside of the mixing chamber. The fluids are distributed to the correct pipes through the rotary union and manifold block located on the back of the cutterhead structure. The center bulkhead on the forward shield includes a set of grease lubricated lip seals to seal on the outer shaft of the rotary union, and prevent material from entering the machine.

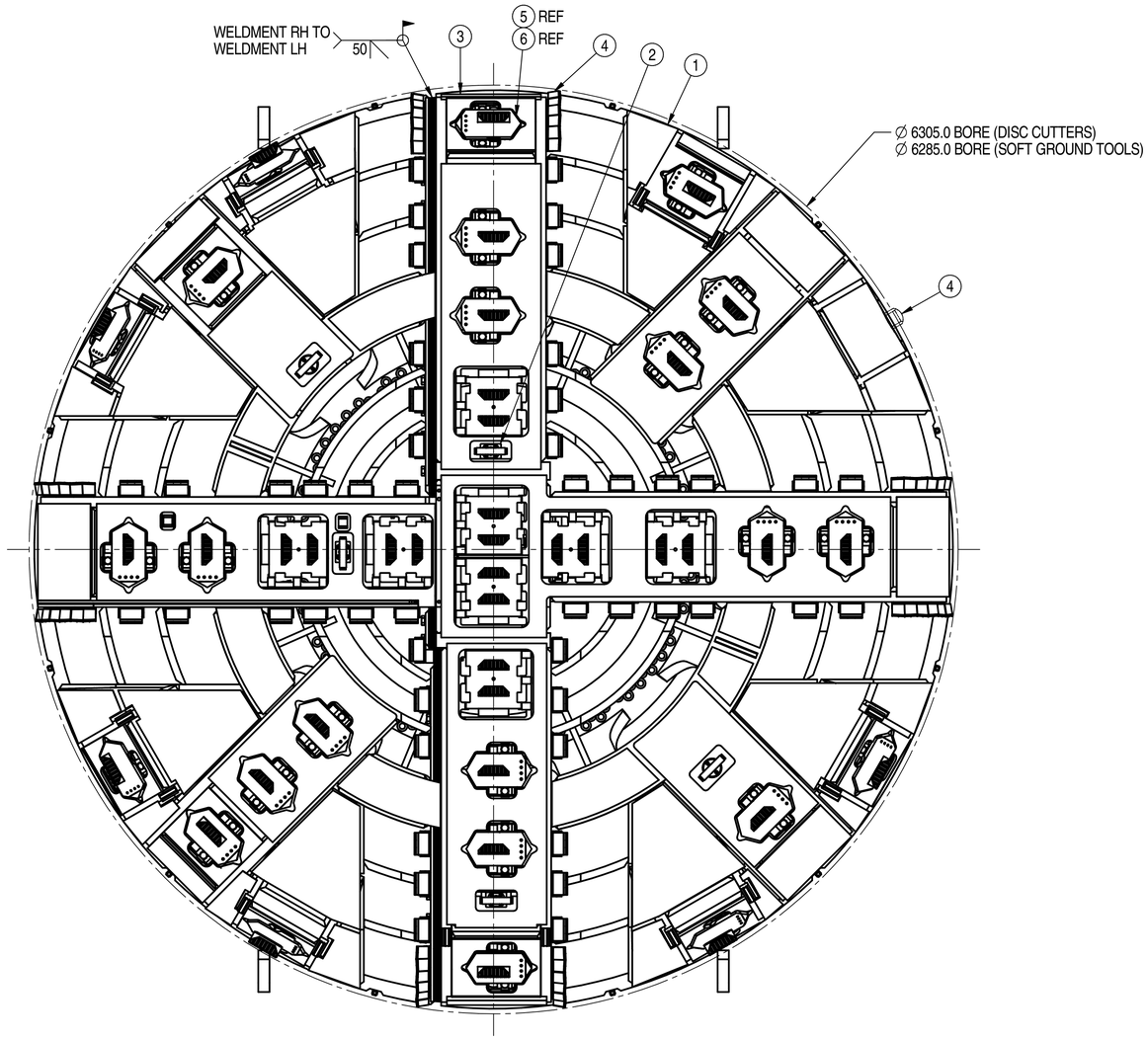

TRC P/N 1002831
CUTTERHEAD ASSEMBLY
(LOOKING AFT)

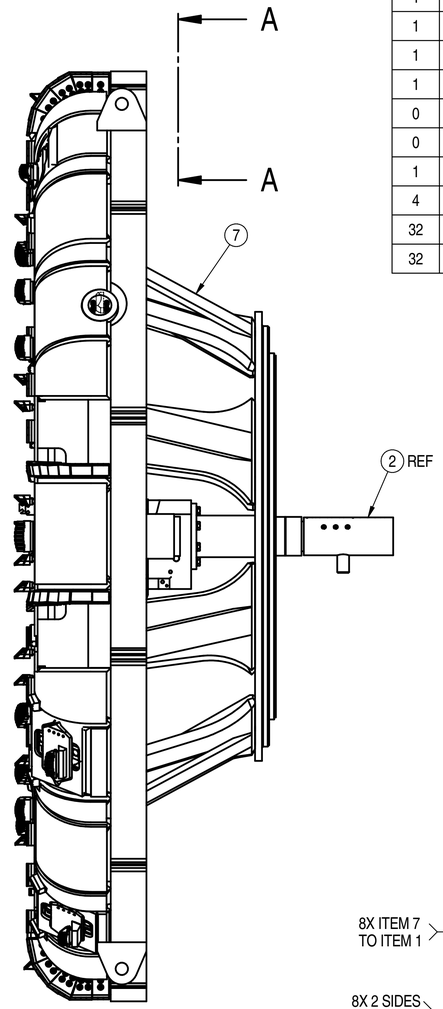

QTY	PART No.	DESCRIPTION	DWG No.	WT. Total (kgs)	ITEM
1	1036583	CHD FINAL MACHINING, RH & LH	1036583	44919.0	1
1	1036154	CUTTERHEAD - PLUMBING	1036154	1826.1	2
1	1050390	FACEPLATE INSTALLATION	1050390	2676.4	3
1	1050587	CUTTING TOOL INSTALLATION	1050587	2233.2	4
0	1050575	DISC CUTTER INSTALLATION	1050575	0.0	5
0	1050906	KNIFE BIT INSTALLATION	1050906	0.0	6
1	1035104	CHD PEDESTAL MACHINING	1035104	5415.2	7
4	1036296	DOWEL PIN	1036296	4.5	8
32	A22152-91405	HHCS, M36x140mm C8.8	A22152	50.6	9
32	A22158-9	WASHER, HD NW OD M36	A22158	3.5	10

NOTES:

1. REMOVE ALL BURRS & BREAK SHARP EDGES.
2. ALL WELDING SHALL MEET THE REQUIREMENTS OF THE LATEST EDITION OF THE AWS STRUCTURAL WELDING CODE (D1.1/D1.1M). ALL SECTIONS AS APPLICABLE UNLESS OTHERWISE NOTED. USE E70XX LOW HYDROGEN ELECTRODES OR EQUIVALENT.
3. TORQUE FASTENERS PER TRC DRAWING 5750 9900 17.

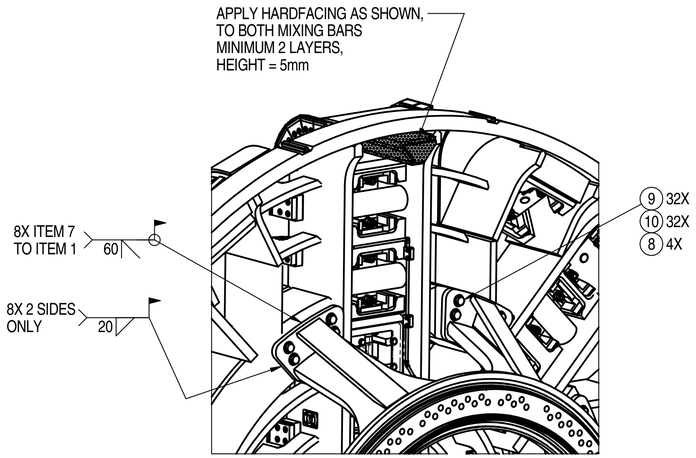

REAR VIEW SHOWING
PEDESTAL

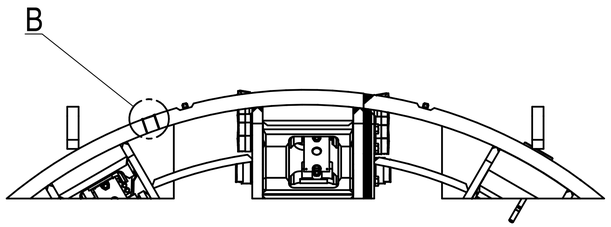

SECTION A-A

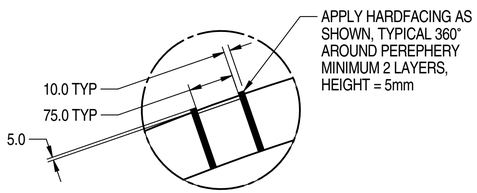

DETAIL B
SCALE 1:5

PROPRIETARY NOTICE
The information disclosed hereon, is the sole property of The Robbins Company, and remains their sole property. It shall not be duplicated in full or part, used by, or disclosed to any other party without prior written consent of The Robbins Company. By accepting this information, recipient agrees to abide in toto with this notice, without any modification whatsoever to the conditions. This material is on loan only, and is to be returned upon request to The Robbins Company.

MACHINE	NEXT ASSY
EPB2016-376	1002830
EPB2016-377	

UNLESS NOTED ALL DIMS ARE mm

TOLERANCES UNLESS NOTED

FAB (mm)		MACHINING (mm)	
0-300	±1.5	X	±1.5
300-1500	±3	X.X	±1.0
1500-6000	±6	X.XX	±0.40
6000+	±12	X.XXX	±0.100
		ANGLES	±1°
THIRD ANGLE PROJECTION		SURFACE FINISH	6.3

DIMENSIONS (X) ARE REF

ALL GEOMETRIC DIMENSIONING & TOLERANCING PER ANSI Y14.5-2009

REV	DESCRIPTION	REV'D BY/ DATE	APP'D BY/ DATE

TITLE: CUTTERHEAD ASSEMBLY

SIZE: D | DWG No.: 1002831 | REV: 0 | SHT 1 OF 1 | SCALE: 1:20 | DO NOT SCALE

Robbins

DRAWN BY: C.ROHDE | DATE: 7/11/2012 | CHECKED STANDARDS: B.WAKELEE | CHECKED DESIGN: B.WAKELEE

UNIT OF MEASURE: Each | APPROVED BY: J.HEINEMAN

WEIGHT TOTAL: 58984.4 kg | DATE: 7/13/2012

www.TheRobbinsCompany.com

QTY	PART No.	DESCRIPTION	DWG No.	WT. Total (kgs)	ITEM
8	D120894-5	HARDWARE, BLWL CENTER CUTTER	D120894	125.4	1
8	D66250-4-17H75	Ø17" BLWL CNTR CUTTER, HD, .75"	D66250	2148.2	2
24	D78552-1	Ø17" CUTTER HOUSING BLWL ASSY	D78552	369.3	3
24	D67876-1-17H75	Ø17" BLWL F/G CUTTER, HD, .75"	D67876	2863.9	4

NOTES:

1. REMOVE ALL BURRS & BREAK SHARP EDGES.
2. TORQUE FASTENERS PER TRC DRAWING 5750 9900 17.

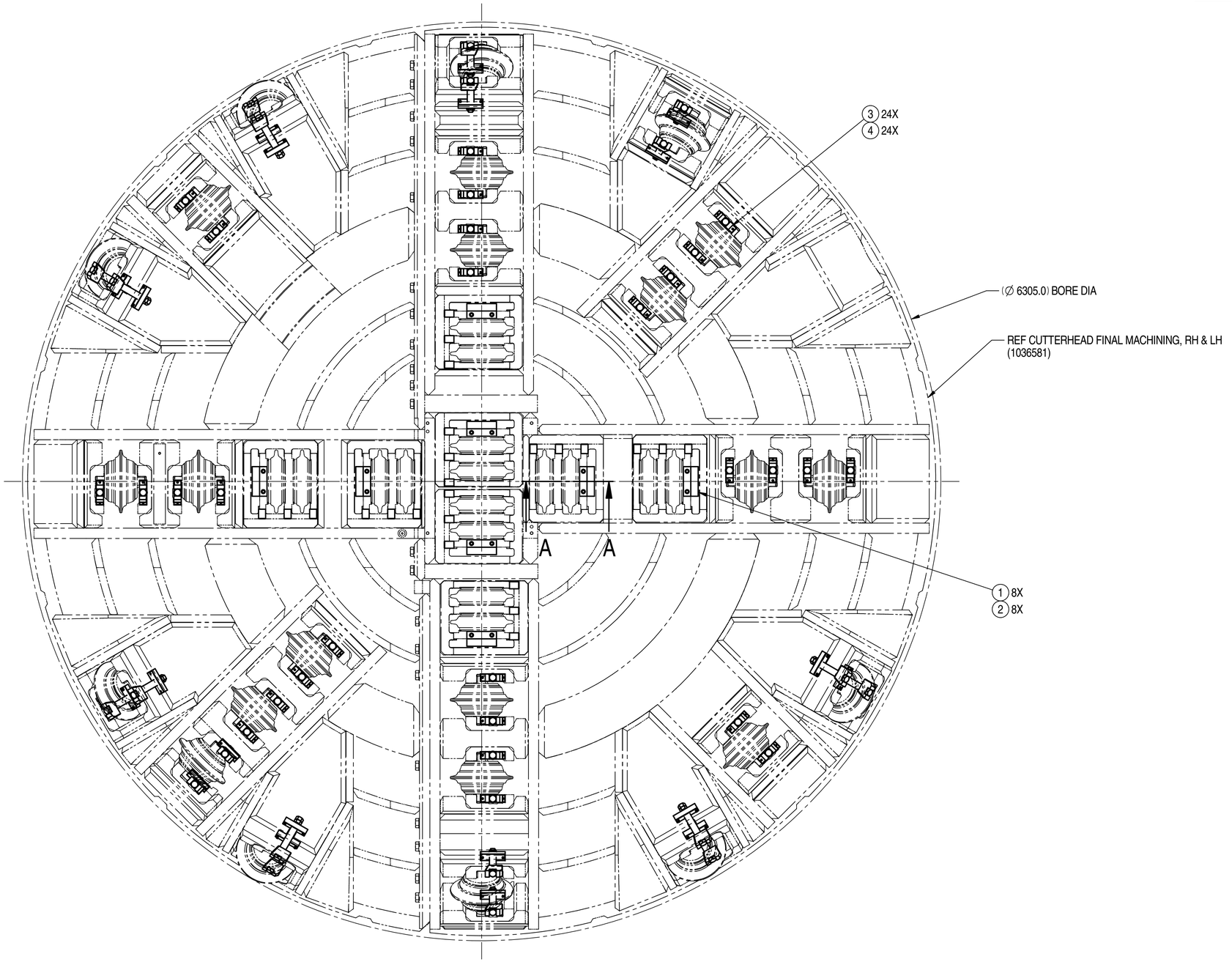

TRC P/N 1050575
DISC CUTTER INSTALLATION

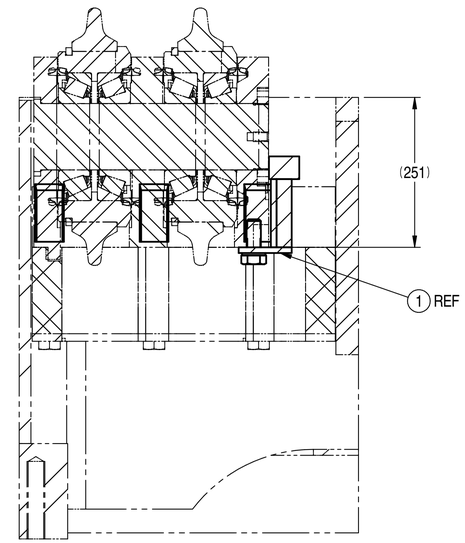

SECTION A-A
SCALE 1:5

MACHINE	NEXT ASSY
EPB2016-376/377	1002831

UNLESS NOTED ALL DIMS ARE mm

TOLERANCES UNLESS NOTED

FAB (mm)		MACHINING (mm)	
0-300	±1.5	X	±1.5
300-1500	±3	X.X	±1.0
1500-6000	±6	X.XX	±0.40
6000+	±12	X.XXX	±0.100
		ANGLES	±1°
THIRD ANGLE PROJECTION		SURFACE FINISH	6.3

DIMENSIONS (X) ARE REF

ALL GEOMETRIC DIMENSIONING & TOLERANCING PER ANSI Y14.5-2009

PROPRIETARY NOTICE
The information disclosed hereon, is the sole property of The Robbins Company, and remains their sole property. It shall not be duplicated in full or part, used by, or disclosed to any other party without prior written consent of The Robbins Company. By accepting this information, recipient agrees to abide in total with this notice, without any modification whatsoever to the conditions. This material is on loan only, and is to be returned upon request to The Robbins Company.

REV	DESCRIPTION	REV'D BY/ DATE	APP'D BY/ DATE

TITLE
DISC CUTTER INSTALLATION

SIZE	DWG No.	REV	SHT	SCALE
D	1050575	0	1 OF 1	1:15

DO NOT SCALE

DRAWN BY	CHECKED STANDARDS
C.ROHDE	B.WAKELEE
DATE 7/10/2012	CHECKED DESIGN B.WAKELEE
UNIT OF MEASURE Each	APPROVED BY J.HEINEMAN
WEIGHT TOTAL 23368.7 kg	DATE 7/13/2012

Robbins

www.TheRobbinsCompany.com

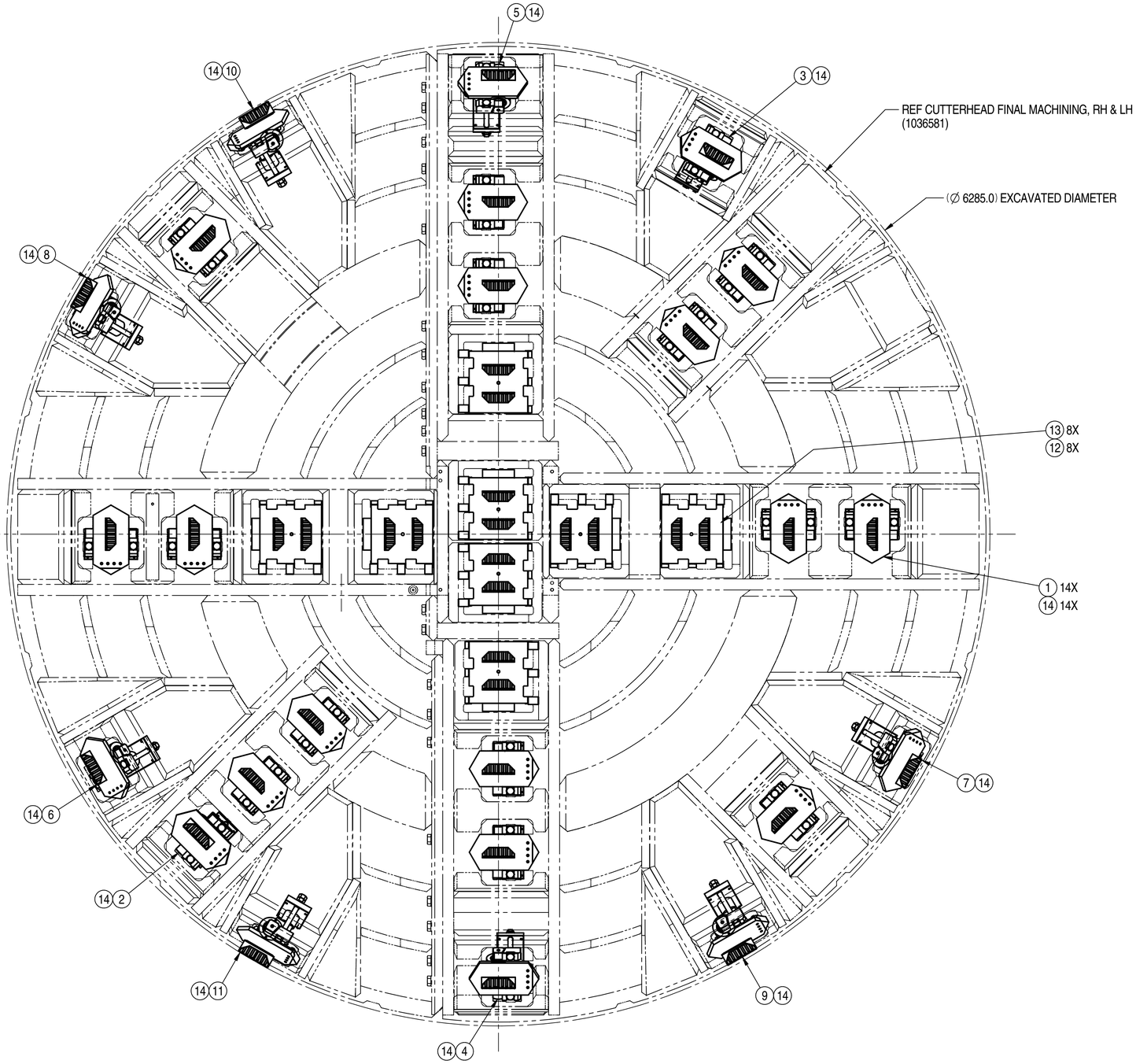

TRC P/N 1050906
KNIFE BIT INSTALLATION

QTY	PART No.	DESCRIPTION	DWG No.	WT. Total (kgs)	ITEM
14	1002651	KNIFE BIT ASSY, FACE	1002651	1092.0	1
1	1002652	KNIFE BIT ASSY, GAGE, 8.8 DEG	1002652	79.2	2
1	1002653	KNIFE BIT ASSY, GAGE, 18.6 DEG	1002653	78.6	3
1	1002654	KNIFE BIT ASSY, GAGE, 27.7 DEG	1002654	78.6	4
1	1002655	KNIFE BIT ASSY, GAGE, 36.5 DEG	1002655	79.0	5
1	1002656	KNIFE BIT ASSY, GAGE, 44.7 DEG	1002656	79.6	6
1	1002657	KNIFE BIT ASSY, GAGE, 52.1 DEG	1002657	80.2	7
1	1002658	KNIFE BIT ASSY, GAGE, 58.7 DEG	1002658	81.0	8
1	1002659	KNIFE BIT ASSY, GAGE, 64.1 DEG	1002659	81.8	9
1	1002660	KNIFE BIT ASSY, GAGE, 68.0 DEG	1002660	81.7	10
1	1002661	KNIFE BIT ASSY. GAGE, 70.0 DEG	1002661	80.2	11
8	1002664	KNIFE BIT ASSY, TWIN	1002664	1289.3	12
8	1002665	MOUNTING HARDWARE, TWIN KNIFE	1002665	125.4	13
24	1002662	MOUNTING HARDWARE, F/G KNIFE BIT	1002662	960.5	14

NOTES:

1. REMOVE ALL BURRS & BREAK SHARP EDGES.
2. PAINT PER ROBBINS SPEC RC1852. MACHINED SURFACES NOT TO BE PAINTED, BUT PROTECTED BY OTHER SUITABLE METHODS.
3. TORQUE FASTENERS PER TRC DRAWING 5750 9900 17.

PROPRIETARY NOTICE
The information disclosed hereon, is the sole property of The Robbins Company, and remains their sole property. It shall not be duplicated in full or part, used by, or disclosed to any other party without prior written consent of The Robbins Company. By accepting this information, recipient agrees to abide in total with this notice, without any modification whatsoever to the conditions. This material is on loan only, and is to be returned upon request to The Robbins Company.

MACHINE	NEXT ASSY
EPB2016-376/377	1002831

UNLESS NOTED ALL DIMS ARE mm

TOLERANCES UNLESS NOTED

FAB (mm)		MACHINING (mm)	
0-300	±1.5	X	±1.5
300-1500	±3	X.X	±1.0
1500-6000	±6	X.XX	±0.40
6000+	±12	X.XXX	±0.100
		ANGLES	±1°
THIRD ANGLE PROJECTION		SURFACE FINISH	6.3

DIMENSIONS (X) ARE REF

ALL GEOMETRIC DIMENSIONING & TOLERANCING PER ANSI Y14.5-2009

REV	DESCRIPTION	REV'D BY/ DATE	APP'D BY/ DATE

TITLE
KNIFE BIT INSTALLATION

SIZE D | DWG No. 1050906 | REV 0 | SHT 1 OF 1 | SCALE 1:15 | DO NOT SCALE

Robbins

DRAWN BY C.ROHDE
DATE 7/6/2012
CHECKED STANDARDS B.WALELEE
CHECKED DESIGN B.WAKELEE
UNIT OF MEASURE Each
APPROVED BY J.HEINEMAN
WEIGHT TOTAL 1854.6 kg
DATE 7/10/2012

www.TheRobbinsCompany.com

NOTES:

1. REMOVE ALL BURRS AND BREAK SHARP EDGES.
2. ALL WELDING SHALL MEET THE REQUIREMENTS OF THE LATEST EDITION OF THE AWS STRUCTURAL WELDING CODE - ALL SECTIONS AS APPLICABLE UNLESS OTHERWISE NOTED. USE E70XX LOW HYRDOGEN ELECTRODES OR EQUIVALENT.
3. ALL STEEL PLATES TO BE U.T. INSPECTED PER ASTM A578/A578M-96 (2001) - LEVEL B ACCEPTANCE - 100% SCAN PER SECTION 5.1.1.
4. SPLICING OF JOINTS PERMITTED. SPLICE JOINT TO HAVE FULL PENETRATION DOUBLE BEVEL GROOVE WELDS, GROUND FLUSH.

5 TACK WELD BRACING PIPE (ITEMS 84 & 85) INSIDE CUTTER BOXES TO HOLD DIMENSIONS +3.0/-1.5 DIMENSIONS TO BE HELD AFTER WELDING IS COMPLETED AND BEFORE HOUSING ARE INSTALLED. REMOVE BRACING PIPE PRIOR TO INSTALLING HOUSINGS.

6. STRESS RELIEVE ACCORDING TO THE LATEST EDITION OF THE AWS STRUCTURAL WELDING CODE.
7. PAINT PER ROBBINS SPEC RC 1852.

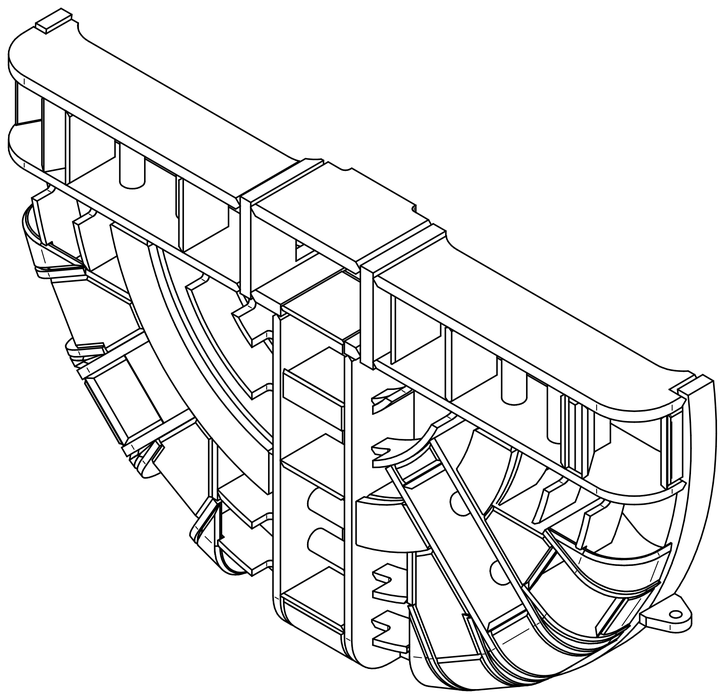

TRC P/N 1036100
CUTTERHEAD WELDMENT, RH

1:20

QTY	PART No.	DESCRIPTION	DWG No.	WT. Total	ITEM
1	1036100-45	SEE DETAIL ON DRAWING	1036100	123.0 kg	45
1	1036100-46	SEE DETAIL ON DRAWING	1036100	35.5 kg	46
1	1036100-47	SEE DETAIL ON DRAWING	1036100	6.6 kg	47
1	1036100-48	SEE DETAIL ON DRAWING	1036100	14.8 kg	48
1	1036100-49	SEE DETAIL ON DRAWING	1036100	37.7 kg	49
1	1036100-50	SEE DETAIL ON DRAWING	1036100	60.3 kg	50
1	1036100-51	SEE DETAIL ON DRAWING	1036100	103.5 kg	51
1	1036100-52	SEE DETAIL ON DRAWING	1036100	90.1 kg	52
1	1036100-53	SEE DETAIL ON DRAWING	1036100	106.7 kg	53
1	1036100-54	SEE DETAIL ON DRAWING	1036100	64.9 kg	54
1	1036100-55	SEE DETAIL ON DRAWING	1036100	25.9 kg	55
1	1036100-56	SEE DETAIL ON DRAWING	1036100	7.5 kg	56
2	1036100-57	SEE DETAIL ON DRAWING	1036100	52.6 kg	57
2	1036100-58	SEE DETAIL ON DRAWING	1036100	69.2 kg	58
7	1036100-59	SEE DETAIL ON DRAWING	1036100	548.3 kg	59
5	1036100-60	SEE DETAIL ON DRAWING	1036100	405.7 kg	60
1	1036100-61	SEE DETAIL ON DRAWING	1036100	119.7 kg	61
1	1036100-62	SEE DETAIL ON DRAWING	1036100	36.0 kg	62
2	1036100-63	SEE DETAIL ON DRAWING	1036100	62.2 kg	63
2	1036100-64	SEE DETAIL ON DRAWING	1036100	134.3 kg	64
2	1036100-65	SEE DETAIL ON DRAWING	1036100	31.7 kg	65
2	1036100-66	SEE DETAIL ON DRAWING	1036100	96.5 kg	66
2	1036100-67	SEE DETAIL ON DRAWING	1036100	155.9 kg	67
1	1036100-68	SEE DETAIL ON DRAWING	1036100	56.2 kg	68
1	1036100-69	SEE DETAIL ON DRAWING	1036100	138.2 kg	69
1	1036100-70	SEE DETAIL ON DRAWING	1036100	56.2 kg	70
1	1036100-71	SEE DETAIL ON DRAWING	1036100	138.3 kg	71
1	1036100-72	SEE DETAIL ON DRAWING	1036100	56.0 kg	72
1	1036100-73	SEE DETAIL ON DRAWING	1036100	73.7 kg	73
1	1036100-74	SEE DETAIL ON DRAWING	1036100	45.5 kg	74
1	1036100-75	SEE DETAIL ON DRAWING	1036100	55.4 kg	75
1	1036100-76	SEE DETAIL ON DRAWING	1036100	56.0 kg	76
1	1036100-77	SEE DETAIL ON DRAWING	1036100	56.2 kg	77
1	1036100-78	SEE DETAIL ON DRAWING	1036100	77.8 kg	78
1	1036100-79	SEE DETAIL ON DRAWING	1036100	73.7 kg	79
1	1036100-80	SEE DETAIL ON DRAWING	1036100	77.9 kg	80
1	1036100-81	SEE DETAIL ON DRAWING	1036100	15.6 kg	81
1	1036100-82	SEE DETAIL ON DRAWING	1036100	18.1 kg	82
6	1036100-84	SEE DETAIL ON DRAWING	1036100	103.6 kg	84
2	1036100-85	SEE DETAIL ON DRAWING	1036100	30.0 kg	85
2	1036100-86	SEE DETAIL ON DRAWING	1036100	142.5 kg	86
2	5750007101	LUG, LIFTING 55 TONS	5750007087	77.5 kg	87

QTY	PART No.	DESCRIPTION	DWG No.	WT. Total	ITEM
1	1036100-1	SEE DETAIL ON DRAWING	1036100	1959.6 kg	1
1	1036100-2	SEE DETAIL ON DRAWING	1036100	367.4 kg	2
1	1036100-3	SEE DETAIL ON DRAWING	1036100	302.5 kg	3
1	1036100-4	SEE DETAIL ON DRAWING	1036100	569.9 kg	4
1	1036100-5	SEE DETAIL ON DRAWING	1036100	71.7 kg	5
1	1036100-6	SEE DETAIL ON DRAWING	1036100	150.9 kg	6
1	1036100-7	SEE DETAIL ON DRAWING	1036100	110.2 kg	7
1	1036100-8	SEE DETAIL ON DRAWING	1036100	1008.4 kg	8
1	1036100-9	SEE DETAIL ON DRAWING	1036100	975.8 kg	9
1	1036100-10	SEE DETAIL ON DRAWING	1036100	787.6 kg	10
1	1036100-11	SEE DETAIL ON DRAWING	1036100	761.2 kg	11
1	1036100-12	SEE DETAIL ON DRAWING	1036100	854.4 kg	12
1	1036100-13	SEE DETAIL ON DRAWING	1036100	860.0 kg	13
1	1036100-14	SEE DETAIL ON DRAWING	1036100	564.5 kg	14
1	1036100-15	SEE DETAIL ON DRAWING	1036100	560.7 kg	15
1	1036100-16	SEE DETAIL ON DRAWING	1036100	360.7 kg	16
1	1036100-17	SEE DETAIL ON DRAWING	1036100	358.0 kg	17
1	1036100-18	SEE DETAIL ON DRAWING	1036100	18.5 kg	18
1	1036100-19	SEE DETAIL ON DRAWING	1036100	435.6 kg	19
1	1036100-20	SEE DETAIL ON DRAWING	1036100	142.5 kg	20
1	1036100-21	SEE DETAIL ON DRAWING	1036100	134.7 kg	21
2	1036100-22	SEE DETAIL ON DRAWING	1036100	310.8 kg	22
1	1036100-23	SEE DETAIL ON DRAWING	1036100	266.6 kg	23
2	1036100-24	SEE DETAIL ON DRAWING	1036100	215.2 kg	24
2	1036100-25	SEE DETAIL ON DRAWING	1036100	270.4 kg	25
2	1036100-26	SEE DETAIL ON DRAWING	1036100	328.6 kg	26
2	1036100-27	SEE DETAIL ON DRAWING	1036100	195.1 kg	27
1	1036100-28	SEE DETAIL ON DRAWING	1036100	411.7 kg	28
1	1036100-29	SEE DETAIL ON DRAWING	1036100	382.8 kg	29
1	1036100-30	SEE DETAIL ON DRAWING	1036100	117.7 kg	30
1	1036100-31	SEE DETAIL ON DRAWING	1036100	125.9 kg	31
1	1036100-32	SEE DETAIL ON DRAWING	1036100	126.3 kg	32
1	1036100-33	SEE DETAIL ON DRAWING	1036100	119.4 kg	33
1	1036100-34	SEE DETAIL ON DRAWING	1036100	169.8 kg	34
1	1036100-35	SEE DETAIL ON DRAWING	1036100	509.8 kg	35
1	1036100-36	SEE DETAIL ON DRAWING	1036100	166.9 kg	36
1	1036100-37	SEE DETAIL ON DRAWING	1036100	61.7 kg	37
2	1036100-38	SEE DETAIL ON DRAWING	1036100	46.6 kg	38
1	1036100-39	SEE DETAIL ON DRAWING	1036100	100.2 kg	39
2	1036100-40	SEE DETAIL ON DRAWING	1036100	46.6 kg	40
1	1036100-41	SEE DETAIL ON DRAWING	1036100	118.8 kg	41
1	1036100-43	SEE DETAIL ON DRAWING	1036100	24.0 kg	43
1	1036100-44	SEE DETAIL ON DRAWING	1036100	75.9 kg	44

PROPRIETARY NOTICE
This information disclosed herein, in the sole property of The Robbins Company and may not be reproduced in whole or part, used by, or disclosed to any person without the written permission of The Robbins Company. By accepting this information, recipient agrees to indemnify and hold harmless The Robbins Company from any and all loss or damage resulting from its unauthorized use or disclosure to the conditions. This material is on loan only, and must be returned to The Robbins Company upon request.

REV	DESCRIPTION	REVD BY/ DATE	APP'D BY/ DATE

MACHINE	NEXT ASSY
EPB2016-376/377	1036458

UNLESS NOTED ALL DIMS ARE mm
TOLERANCES UNLESS NOTED

0-300	±1.5	X	±1.5
300-1500	±3	X.X	±1.0
1500-6000	±6	X.XX	±.40
6000+	±12	X.XXX	±.100
		ANGLES	±1°
THIRD ANGLE PROJECTION		SURFACE FINISH	

DIMENSIONS (X) ARE REF
ALL GEOMETRIC DIMENSIONING & TOLERANCING PER ANSI Y14.5-2009

TITLE: CUTTERHEAD WELDMENT, RH

SIZE	DWG No.	REV.	SHT	SCALE
D	1036100	0	1 OF 15	SEE DETAIL

DO NOT SCALE

DRAWN BY: C.ROHDE
DATE: 2/3/2012
CHECKED STANDARDS: D.READY
CHECKED DESIGN: D.READY
APPROVED BY: J.HEINEMAN
DATE: 3/2/2012
WEIGHT TOTAL: 19887.4 kg

Robbins

www.TheRobbinsCompany.com

1036100

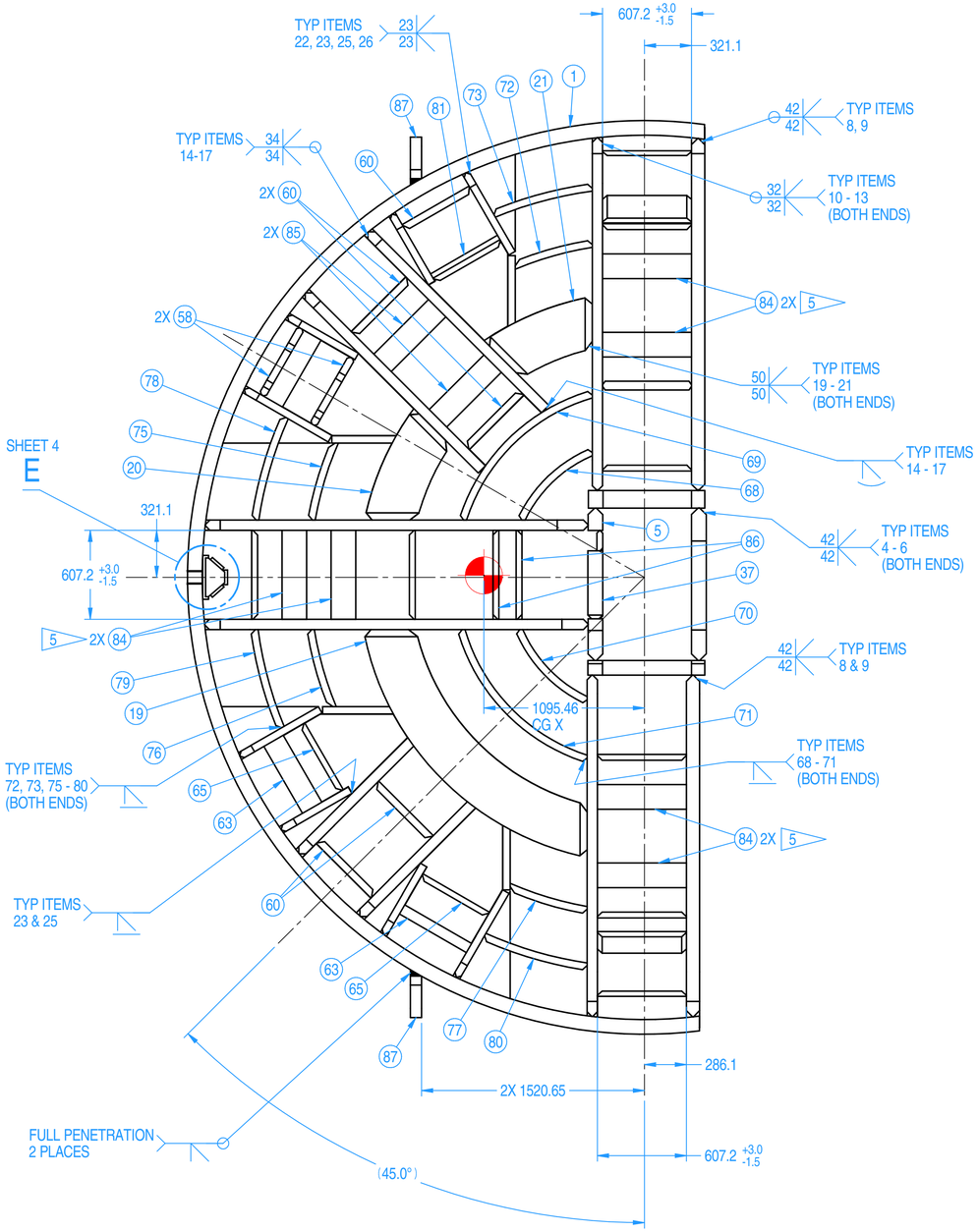

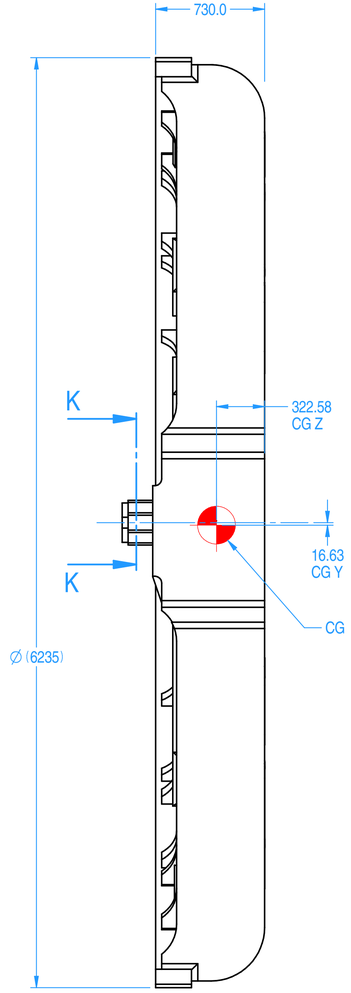

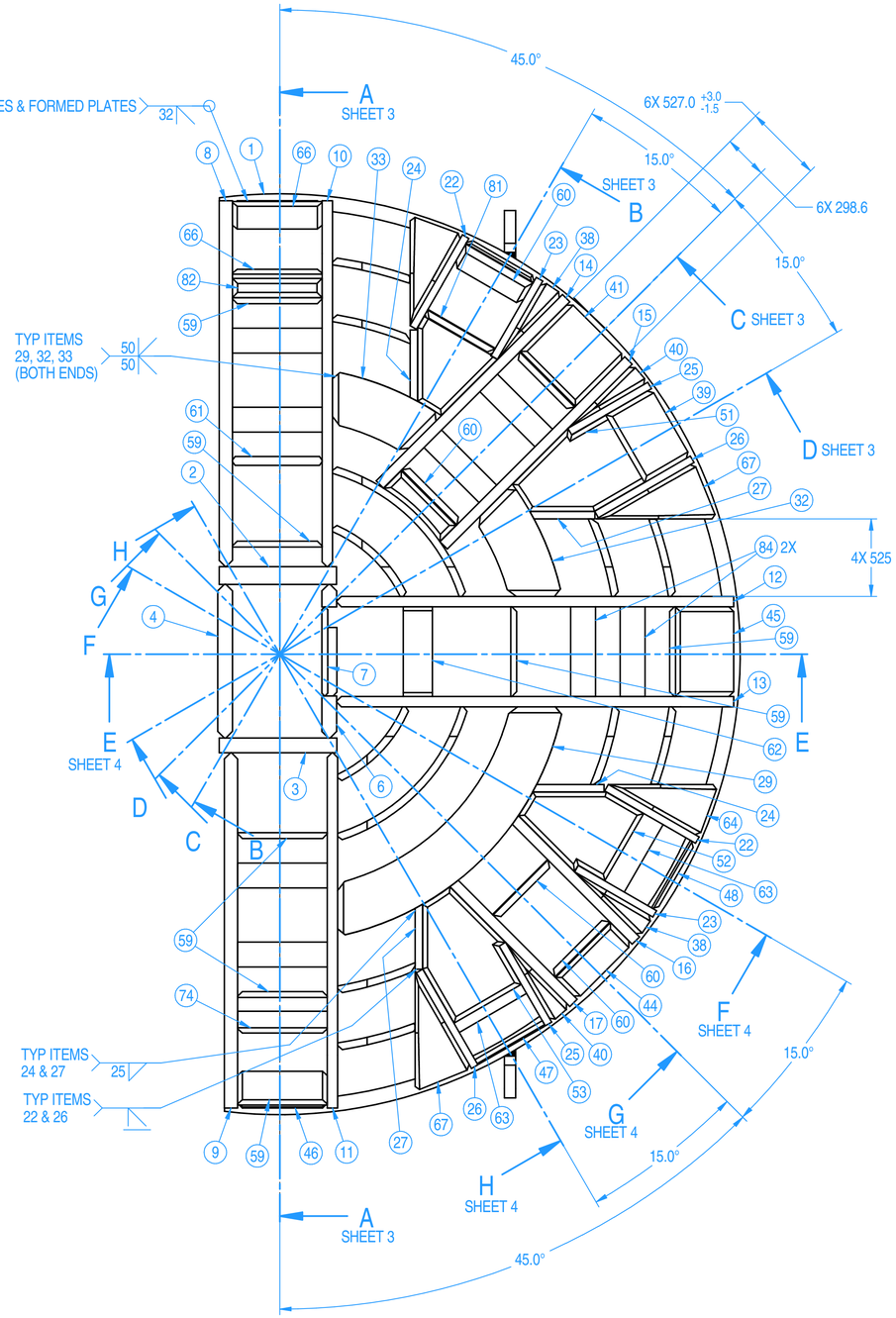

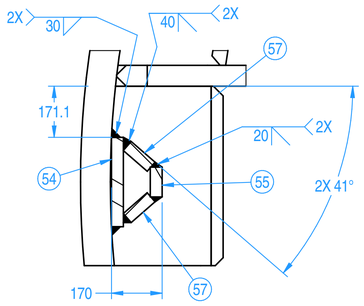

TRC P/N 1036100
CUTTERHEAD WELDMENT, RH

1:20

SECTION K-K
1:10

PROPRIETARY NOTICE
The information disclosed herein is the sole property of The Robbins Company and is furnished in confidence. It shall not be duplicated in full or part, used by, or disclosed to any person for any purpose without the written permission of the Company. By accepting this information, recipient agrees to maintain it in confidence and to use it only for purposes authorized by the Company. This material is on loan only, and upon request will be returned promptly to The Robbins Co.

MACHINE	NEXT ASSY
EPB2016-376/377	1036458

UNLESS NOTED ALL DIMS ARE mm
TOLERANCES UNLESS NOTED
0-300 ±1.5
300-1500 ±3
1500-6000 ±6
6000+ ±12
THIRD ANGLE PROJECTION
DIMENSIONS (X) ARE REF
ALL GEOMETRIC DIMENSIONING & TOLERANCING PER ANSI Y14.5-2009

X ±1.5
X.X ±1.0
X.XX ±.40
X.XXX ±.100
ANGLES ±1°
SURFACE FINISH

REV	DESCRIPTION	REVD BY / DATE	APP'D BY / DATE

TITLE: CUTTERHEAD WELDMENT, RH

SIZE	DWG No.	REV	SHT	SCALE
D	1036100	0	2 OF 15	SEE DETAIL

DO NOT SCALE

DRAWN BY: C.ROHDE
DATE: 2/3/2012
CHECKED STANDARDS: D.READY
CHECKED DESIGN: D.READY
WEIGHT TOTAL: 19887.4 kg
APPROVED BY: J.HEINEMAN
DATE: 3/2/2012

Robbins
www.TheRobbinsCompany.com

1036100

NOTES:

1. REMOVE ALL BURRS AND BREAK SHARP EDGES.
2. ALL WELDING SHALL MEET THE REQUIREMENTS OF THE LATEST EDITION OF THE AWS STRUCTURAL WELDING CODE - ALL SECTIONS AS APPLICABLE UNLESS OTHERWISE NOTED. USE E70XX LOW HYRDOGEN ELECTRODES OR EQUIVALENT.
3. ALL STEEL PLATES TO BE U.T. INSPECTED PER ASTM A578/A578M-96 (2001) - LEVEL B ACCEPTANCE - 100% SCAN PER SECTION 5.1.1.
4. SPLICING OF JOINTS PERMITTED. SPLICE JOINT TO HAVE FULL PENETRATION DOUBLE BEVEL GROOVE WELDS, GROUND FLUSH.

5 TACK WELD BRACING PIPE (ITEMS 72 & 73) INSIDE CUTTER BOXES TO HOLD DIMENSIONS +3.0/-1.5 DIMENSIONS TO BE HELD AFTER WELDING IS COMPLETED AND BEFORE HOUSING ARE INSTALLED. REMOVE BRACING PIPE PRIOR TO INSTALLING HOUSINGS.

6. STRESS RELIEVE ACCORDING TO THE LATEST EDITION OF THE AWS STRUCTURAL WELDING CODE.
7. PAINT PER ROBBINS SPEC RC 1852.

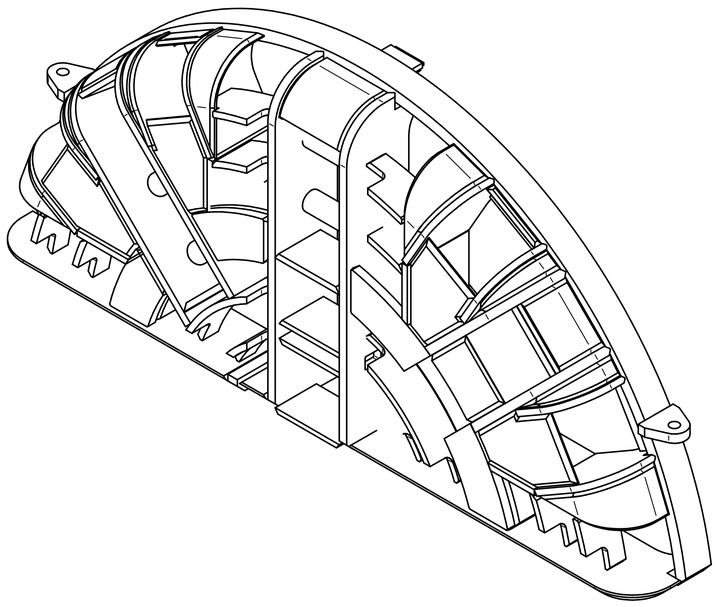

TRC P/N 1036099
CUTTERHEAD WELDMENT, LH

1:20

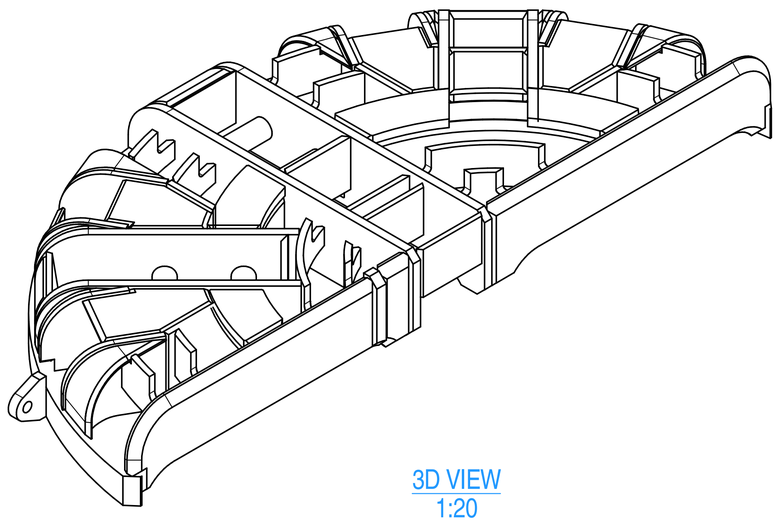

3D VIEW
1:20

QTY	PART No.	DESCRIPTION	DWG No.	WT. Total	ITEM
1	1036099-44	SEE DETAIL ON DRAWING	1036099	67.8 kg	44
1	1036099-45	SEE DETAIL ON DRAWING	1036099	26.4 kg	45
1	1036099-46	SEE DETAIL ON DRAWING	1036099	5.6 kg	46
2	1036099-47	SEE DETAIL ON DRAWING	1036099	52.6 kg	47
3	1036099-48	SEE DETAIL ON DRAWING	1036099	213.9 kg	48
3	1036099-49	SEE DETAIL ON DRAWING	1036099	242.7 kg	49
1	1036099-50	SEE DETAIL ON DRAWING	1036099	55.9 kg	50
2	1036099-51	SEE DETAIL ON DRAWING	1036099	187.6 kg	51
2	1036099-52	SEE DETAIL ON DRAWING	1036099	22.3 kg	52
1	1036099-53	SEE DETAIL ON DRAWING	1036099	26.9 kg	53
3	1036099-54	SEE DETAIL ON DRAWING	1036099	88.9 kg	54
2	1036099-55	SEE DETAIL ON DRAWING	1036099	155.9 kg	55
2	1036099-56	SEE DETAIL ON DRAWING	1036099	134.5 kg	56
2	1036099-57	SEE DETAIL ON DRAWING	1036099	32.3 kg	57
1	1036099-58	SEE DETAIL ON DRAWING	1036099	127.8 kg	58
1	1036099-59	SEE DETAIL ON DRAWING	1036099	46.5 kg	59
1	1036099-60	SEE DETAIL ON DRAWING	1036099	68.2 kg	60
1	1036099-62	SEE DETAIL ON DRAWING	1036099	55.9 kg	62
1	1036099-63	SEE DETAIL ON DRAWING	1036099	73.7 kg	63
1	1036099-65	SEE DETAIL ON DRAWING	1036099	46.2 kg	65
1	1036099-66	SEE DETAIL ON DRAWING	1036099	56.2 kg	66
1	1036099-67	SEE DETAIL ON DRAWING	1036099	64.1 kg	67
1	1036099-68	SEE DETAIL ON DRAWING	1036099	77.8 kg	68
1	1036099-71	SEE DETAIL ON DRAWING	1036099	66.8 kg	71
2	1036099-72	SEE DETAIL ON DRAWING	1036099	34.5 kg	72
2	1036099-73	SEE DETAIL ON DRAWING	1036099	30.0 kg	73
1	1036099-74	SEE DETAIL ON DRAWING	1036099	130.0 kg	74
2	5750007101	LUG, LIFTING 55 TONS	5750007087	77.5 kg	75

QTY	PART No.	DESCRIPTION	DWG No.	WT. Total	ITEM
1	1036099-1	SEE DETAIL ON DRAWING	1036099	1663.0 kg	1
1	1036099-2	SEE DETAIL ON DRAWING	1036099	1014.1 kg	2
1	1036099-3	SEE DETAIL ON DRAWING	1036099	861.5 kg	3
1	1036099-4	SEE DETAIL ON DRAWING	1036099	874.2 kg	4
1	1036099-5	SEE DETAIL ON DRAWING	1036099	840.0 kg	5
1	1036099-6	SEE DETAIL ON DRAWING	1036099	109.5 kg	6
1	1036099-7	SEE DETAIL ON DRAWING	1036099	48.8 kg	7
1	1036099-8	SEE DETAIL ON DRAWING	1036099	360.3 kg	8
1	1036099-9	SEE DETAL ON DRAWING	1036099	361.7 kg	9
1	1036099-10	SEE DETAIL ON DRAWING	1036099	561.3 kg	10
1	1036099-11	SEE DETAIL ON DRAWING	1036099	565.1 kg	11
1	1036099-12	SEE DETAIL ON DRAWING	1036099	56.2 kg	12
1	1036099-13	SEE DETAIL ON DRAWING	1036099	419.4 kg	13
1	1036099-14	SEE DETAIL ON DRAWING	1036099	118.8 kg	14
1	1036099-15	SEE DETAIL ON DRAWING	1036099	142.6 kg	15
2	1036099-16	SEE DETAIL ON DRAWING	1036099	217.1 kg	16
2	1036099-17	SEE DETAIL ON DRAWING	1036099	312.4 kg	17
2	1036099-18	SEE DETAIL ON DRAWING	1036099	268.1 kg	18
2	1036099-19	SEE DETAIL ON DRAWING	1036099	196.1 kg	19
2	1036099-20	SEE DETAIL ON DRAWING	1036099	328.9 kg	20
2	1036099-21	SEE DETAIL ON DRAWING	1036099	270.4 kg	21
1	1036099-22	SEE DETAIL ON DRAWING	1036099	395.0 kg	22
1	1036099-23	SEE DETAIL ON DRAWING	1036099	137.2 kg	23
1	1036099-24	SEE DETAIL ON DRAWING	1036099	100.5 kg	24
1	1036099-25	SEE DETAIL ON DRAWING	1036099	126.1 kg	25
1	1036099-26	SEE DETAIL ON DRAWING	1036099	105.7 kg	26
1	1036099-27	SEE DETAIL ON DRAWING	1036099	126.5 kg	27
1	1036099-28	SEE DETAIL ON DRAWING	1036099	500.1 kg	28
1	1036099-29	SEE DETAIL ON DRAWING	1036099	180.1 kg	29
1	1036099-30	SEE DETAIL ON DRAWING	1036099	155.4 kg	30
1	1036099-31	SEE DETAIL ON DRAWING	1036099	104.9 kg	31
1	1036099-32	SEE DETAIL ON DRAWING	1036099	58.9 kg	32
1	1036099-33	SEE DETAIL ON DRAWING	1036099	8.7 kg	33
1	1036099-34	SEE DETAIL ON DRAWING	1036099	49.6 kg	34
1	1036099-35	SEE DETAIL ON DRAWING	1036099	23.1 kg	35
2	1036099-36	SEE DETAIL ON DRAWING	1036099	47.0 kg	36
1	1036099-37	SEE DETAIL ON DRAWING	1036099	56.5 kg	37
1	1036099-38	SEE DETAIL ON DRAWING	1036099	128.0 kg	38
2	1036099-39	SEE DETAIL ON DRAWING	1036099	47.3 kg	39
1	1036099-40	SEE DETAIL ON DRAWING	1036099	110.7 kg	40
1	1036099-41	SEE DETAIL ON DRAWING	1036099	96.0 kg	41
1	1036099-42	SEE DETAIL ON DRAWING	1036099	87.9 kg	42
1	1036099-43	SEE DETAIL ON DRAWING	1036099	108.6 kg	43

PROPRIETARY NOTICE
The information disclosed herein is the sole property of The Robbins Company. By accepting this information, you shall not be duplicated in full or part, used by or disclosed to any person for any purpose detrimental to the interests of this Company. By accepting this information, recipient agrees to indemnify The Robbins Company against any loss or liability whatsoever in the conditions. This material is on loan only, and must be returned to The Robbins Company upon request.

MACHINE	NEXT ASSY
EPB2016-376/377	1036457

UNLESS NOTED ALL DIMS ARE mm
TOLERANCES UNLESS NOTED

0-300	±1.0	X	±1.0
300-1500	±3	X.XX	±.40
1500-6000	±6	X.XXX	±.100
6000+	±12	ANGLES	±1°
		SURFACE FINISH	125

ANGLE PROJECTION
DIMENSIONS IN: ARE REF
ALL GEOMETRIC DIMENSIONING & TOLERANCING PER ANSI Y14.5-2009

REV	DESCRIPTION	REV'D BY/ DATE	APP'D BY/ DATE

TITLE: CUTTERHEAD WELDMENT, LH

SIZE	DWG No.	REV	SHT	SCALE
D	1036099	0	1 OF 14	SEE DETAIL

DO NOT SCALE

DRAWN BY: C.ROHDE
DATE: 1/30/2012
CHECKED STANDARDS: D.READY
CHECKED DESIGN: D.READY
APPROVED BY: J.HEINEMAN
DATE: 3/2/2012
WEIGHT TOTAL: 15089.2 kg

Robbins
www.TheRobbinsCompany.com

1036099

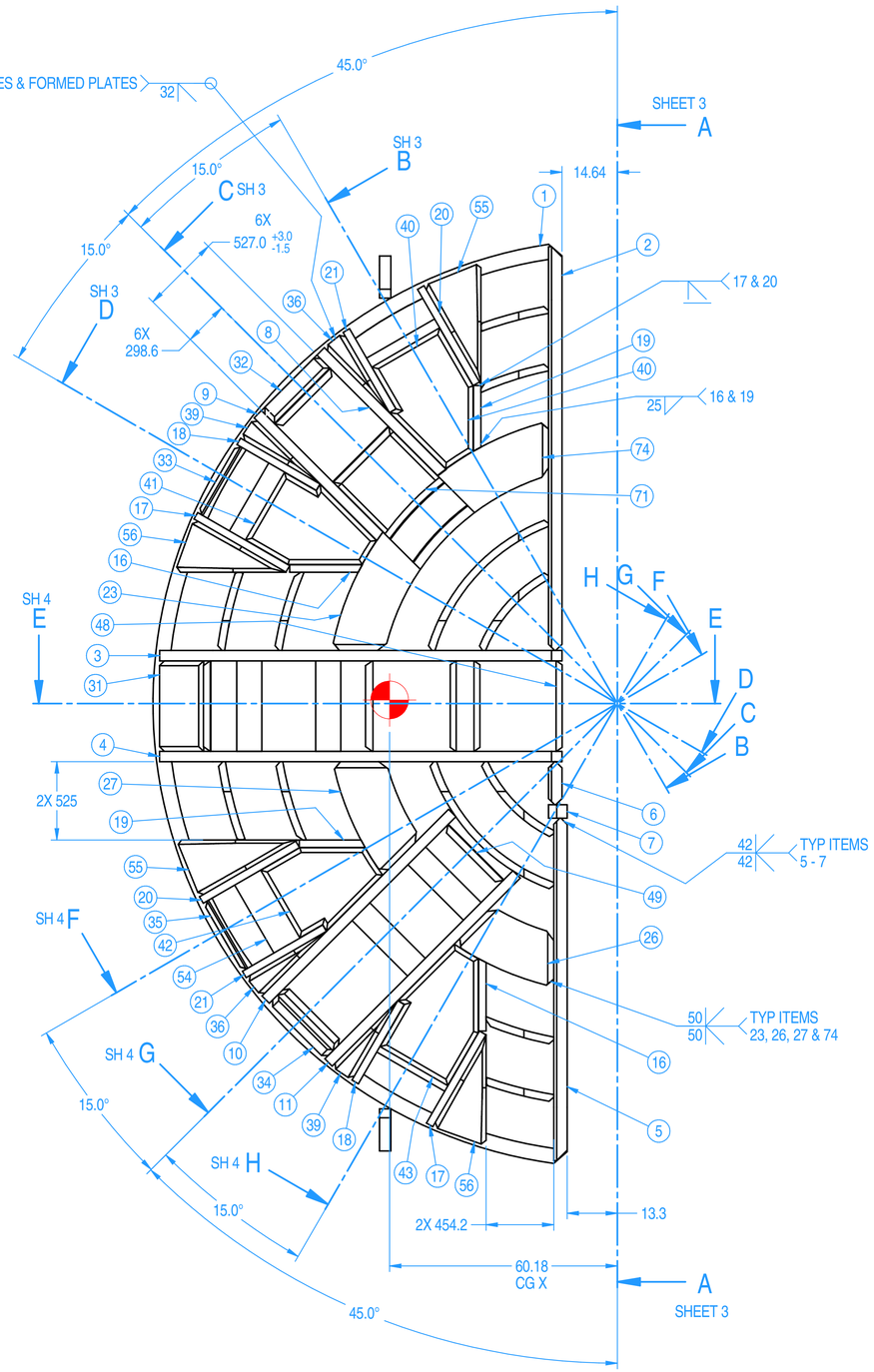

TRC P/N 1036099
CUTTERHEAD WELDMENT, LH
1:20

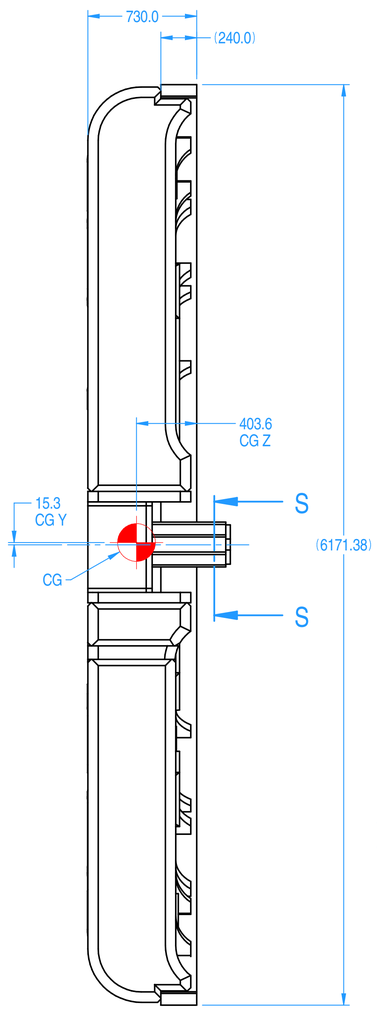

1:20

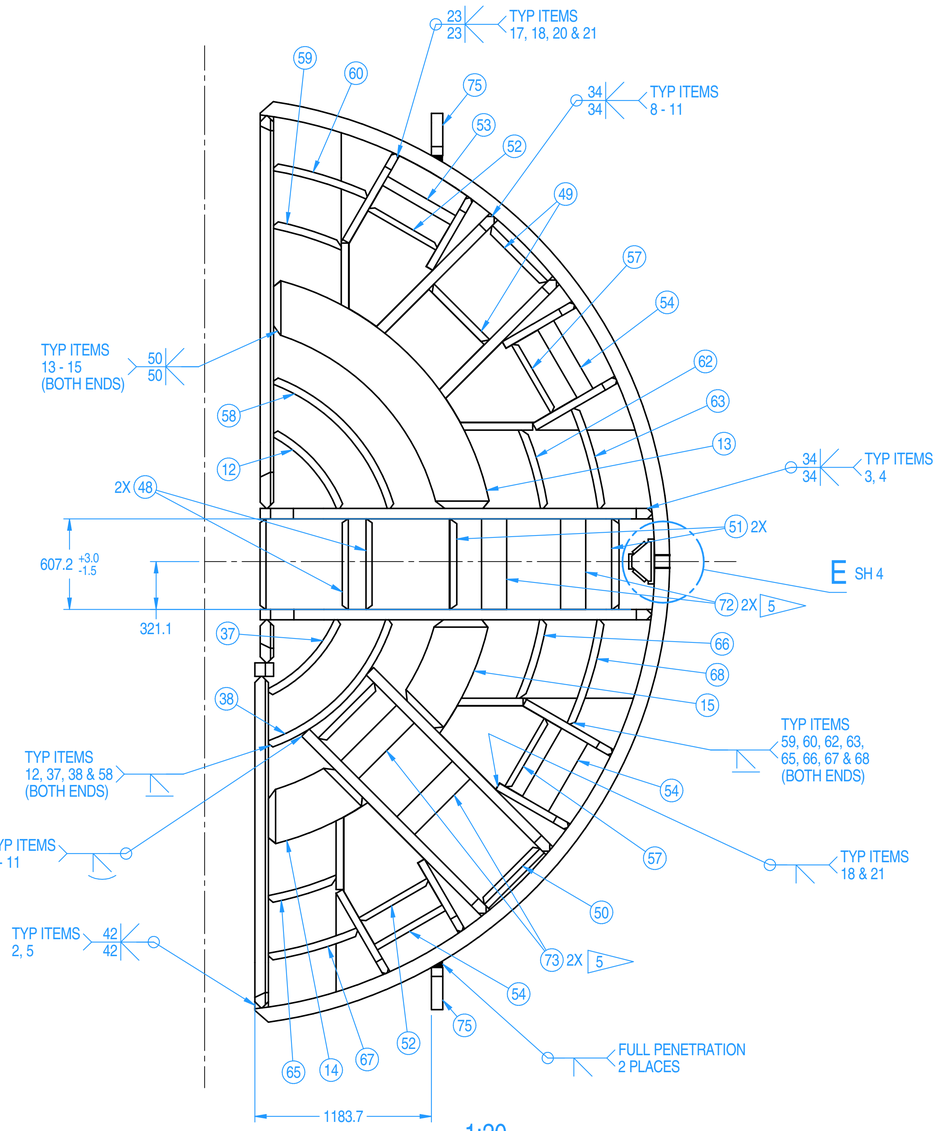

1:20

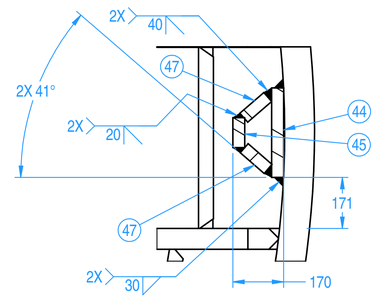

SECTION S-S
1:10

PROPRIETARY NOTICE
The information disclosed herein, is the sole property of The Robbins Company and is not to be published, copied, or disclosed to others without written permission. It shall not be duplicated in full or part, used by, or disclosed to any person for any purpose except as specifically authorized in writing by The Robbins Company. By accepting this information, recipient agrees to indemnify The Robbins Company for any loss or expense from unauthorized use. This material is on loan only, and will be returned upon request. Unless otherwise agreed, all manufacturing rights are reserved.

MACHINE	NEXT ASSY
EPB2016-376/377	1036457

UNLESS NOTED ALL DIMS ARE mm
TOLERANCES (UNLESS NOTED)

0-300	±1.5	X	±1.5
300-1500	±3	X.X	±1.0
1500-6000	±6	X.XX	±.40
6000+	±12	X.XXX	±.100
		ANGLES	±1°
		SURFACE	FINISH

THIRD ANGLE PROJECTION
DIMENSIONS DO ARE REF
ALL GEOMETRIC DIMENSIONING & TOLERANCING PER ANSI Y14.5-2009

REV	DESCRIPTION	REVD BY DATE	APP'D BY DATE

TITLE: CUTTERHEAD WELDMENT, LH

SIZE	DWG No.	REV	SHT	SCALE
D	1036099	0	2 of 14	SEE DETAIL

DO NOT SCALE

DRAWN BY: C.ROHDE
DATE: 1/30/2012
WEIGHT TOTAL: 15089.2 kg
CHECKED STANDARDS: D.READY
CHECKED DESIGN: D.READY
APPROVED BY: J.HEINEMAN
DATE: 3/2/2012

Robbins
www.TheRobbinsCompany.com

1036099

MODEL EPB2016-376/377
SECTION 6 • Cutterhead Support Assembly

1. Cutterhead Support Assembly
2. Main Bearing and Seal assembly
3. Main Bearing Calculations

11 7 AFTER WELDING SHEAR PLATES TO FORWARD SHIELD, WIRE BRUSH OR GRIT BLAST CLAMP SURFACES, BOTH SHEAR PLATE AND CUTTERHEAD SUPPORT, TO BRITE METAL APPLY LOCTITE 586 TO ONE, SURFACE, POSITIONS SHEAR PLATES AND TORQUE FASTENERS.

8 PRIOR TO WELDING PINION HOUSING MOUNT PLATES TO FORWARD SHIELD VERIFY THAT A GAP IS EVIDENT. A 3.0 mm GAP IS NOMINAL.

9 CLEAN WITH ACETONE AND APPLY LOCTITE 586 TO CUTTERHEAD SUPPORT / FORWARD SHIELD JOINT.

10. SEE MAIN BEARING & SEAL ASSEMBLY FOR REQUIRED WELD OF SEAL CARRIER, OUTER TO FORWARD SHIELD (1034541 15)

3 11 CUTTERHEAD SUPPORT (CHS) INSTALLATION PROCEDURE:
- A) BOLT SHEAR PLATES TO CHS
- B) BOLT PINION HOUSING MOUNT PLATES TO CHS
- C) BOLT CHS TO RING A
- D) TACK WELD SHEAR PLATES IN PLACE
- E) TACK WELD PINION HOUSING MOUNT PLATES IN PLACE
- F) REMOVE CHS FROM FORWARD SHIELD
- G) COMPLETE WELDING ON SHEAR PLATES AND PINION HOUSING MOUNTING PLATE AS SHOWN.

4 12 2 - 5mm TIG WELD SEAL BEAD IS PERMITTED ALL AROUND INNER SEAM OF PINION HOUSING.

13 CLEAN WITH ACETONE AND APPLY LOCTITE 586 TO WASHERS.

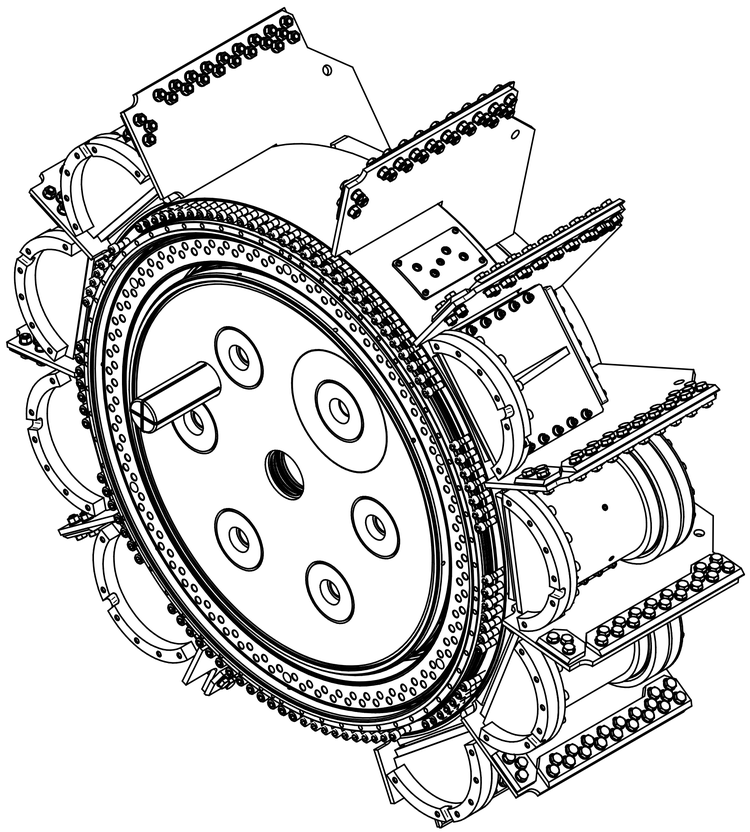

TRC P/N 1034741
CHS ASSY, 5-DRIVE CONFIG

1:16

QTY	PART No.	DESCRIPTION	DWG No.	WT. Total	ITEM
1	1034155	CHS, 8-DRIVE	1034155	12293.0 kg	1
1	1034541	MAIN BEARING & SEAL ASSY	1034541	16575.2 kg	2
1	1033099	CENTER BULKHEAD ASSEMBLY	1033099	4542.0 kg	3
5	1034224	PINION HOUSING	1034224	3655.0 kg	4
8	1034626	PINION HOUSING MOUNT PLATE	1034626	391.6 kg	5
2	1034574	SHEAR PLATE	1034574	62.8 kg	6
9	1034571	SHEAR PLATE	1034571	290.0 kg	7
9	1034570	SHEAR PLATE	1034570	68.6 kg	8
1	1033035	PROXIMITY SENSOR ASSY	1033035	1.5 kg	9
3	1034450	PINION HOUSING BLANK	1034450	977.2 kg	10
3	1034682	COVER, PINION HOUSING BLANK	1034682	231.3 kg	11
16	1034439	PIN, LUBE PORT TAP	1034439	5.1 kg	12
1	1032802	COVER PLATE - CUTTERHEAD SUPPORT	1032802	14.4 kg	13
5	2004068	COVER, DRIVE HOLE	2004068	84.4 kg	14
4	A22153-50359	SHCS, M16x35mm G12.9	A22153	0.4 kg	15
157	A22153-70809	SHCS, M24x80mm G12.9	A22153	70.1 kg	16
80	A22152-80555	HHCS, M30x55mm C8.8	A22152	45.4 kg	17
128	A22153-80809	SHCS, M30x80mm G12.9	A22153	96.0 kg	18
234	A22151-91108	HHCS, M36x110mm C10.9	A22151	313.9 kg	19
48	A22153-91309	SHCS, M36x130mm G12.9	A22153	76.2 kg	20
48	A22152-91408	HHCS, M36x140mm C10.9	A22152	75.9 kg	21
96	A22153-91509	SHCS, M36x150mm G12.9	A22153	167.6 kg	22
4	A22158-5	WASHER, HD NW OD M16	A22158	0.1 kg	23
72	A22158-7	WASHER, HD NW OD M24	A22158	2.3 kg	24
197	A22158-8	WASHER, HD NW OD M30	A22158	13.2 kg	25
564	A22158-9	WASHER, HD NW OD M36	A22158	62.3 kg	26
234	A22154-98	NUT, M36 C10	A22154	96.7 kg	27
1	A111732-4061450	O-RING, Ø7mm x 6145mm LG	A111732	0.4 kg	28
1	A111732-209880	O-RING, Ø5mm X 9880mm LG	A111732	0.2 kg	29
1	A111732-4012000	O-RING, Ø7mm x 1200mm LG	A111732	0.1 kg	30
16	652-645	O-RING, SIZE 2-218		0.0 kg	31
8	652-717	O-RING, SIZE 2-314		0.0 kg	32
2	654-015	LOCTITE 586, 250ml			33

1

2 NOTES:

1. REMOVE ALL BURRS AND BREAK SHARP EDGES.
2. TORQUE ALL FASTENERS PER ROBBINS SPEC 5750 9900 17. ALL CLASS 12.9 FASTENERS SHALL BE TORQUED TO A VALUE MIDWAY BETWEEN CLASS 10.9 AND CLASS 12.9 SPECIFICATIONS.
3. PAINT PER ORDER SPECIFICATIONS. MACHINED SURFACES NOT TO BE PAINTED BUT PROTECTED BY OTHER SUITABLE METHODS.

4 CLEAN CUTTERHEAD SUPPORT AND PINION HOUSING BLANK JOINT SURFACES WITH ACETONE. APPLY LOCTITE 586 TO JOINT (2 EACH SURFACES). INSTALL PINION HOUSING BLANK AND TORQUE FASTENERS COMPLETE.

5 CLEAN CUTTERHEAD SUPPORT AND PINION HOUSING JOINT SURFACES (DATUM-A AND DATUM-B 1034224) WITH ACETONE. APPLY LOCTITE 586 TO JOINT (2 EACH SURFACES). INSTALL PINION HOUSINGS AND LIGHTLY TORQUE FASTENERS. VARIFY PINION HOUSINGS LINE BORED DIAMETERS CREATE A CYLINDER PARALLEL TO GEAR TOOTH WITHIN 0.07mm. TORQUE FASTENERS COMPLETE.

6 USE SEALANT OR TEFLON TAPE ON NPT THREADS. TORQUE NPT CONNECTION AND PRESSURE TEST WITH SHOP AIR TO ASSURE NO LEAKAGE.

REV	DESCRIPTION	BY/ DATE
5	MODEL UPDATE ONLY	DME 01/12/12
4	DWG. No. 1034541 WAS 1032327 ADDED FLAGNOTES 12 AND 13 REV SHT 2	DME 01/05/12
3	ADDED FLAG NOTE 11.	CB 11/10/11
2	ADDED FLAG NOTES 7, 8, 9 & 10. REPLACED ITEM # 15, 16 & 18.	CB 10/17/11
1	ADDED LOCTITE ITEM 33	DME 08/15/11

PROPRIETARY NOTICE
This information, defined herein, is the sole property of The Robbins Company, and remains their sole property. It shall not be duplicated in full or part, used or disclosed to others for any purpose without the written consent of The Robbins Company. By accepting this information, recipient agrees to abide in total accordance with the conditions of this notice and to be governed by the conditions. This material is on loan only, and is to be returned upon request to The Robbins Company.

MACHINE | NEXT ASSY

UNLESS NOTED ALL DIMS ARE mm
TOLERANCES UNLESS NOTED

FAST (mm)		MACHINED (mm)	
0-300	±1.5	X	±1.5
300-1500	±3	X.X	±1.0
1500-6000	±6	X.XX	±.40
6000+	±12	X.XXX	±.100
		ANGLES	±1°
		SURFACE FINISH	3.2

DIMENSIONS (X) ARE REF

ALL GEOMETRIC DIMENSIONING & TOLERANCING PER ANSI Y14.5M-1982 AS APPLICABLE.

TITLE: CHS ASSY, 5-DRIVE CONFIG

SIZE: D | DWG No.: 1034741 | REV: 5 | SHT 1 OF 2 | SCALE: SEE DETAIL - DO NOT SCALE

DRAWN: D.EVANS 06/28/2011 | CHECKED: C.LENABURG 08/22/2011

THIRD ANGLE PROJECTION | APPROVED: C.LENABURG 08/26/2011

WEIGHT TOTAL: 40213.6 kg

Robbins

www.TheRobbinsCompany.com

1034741

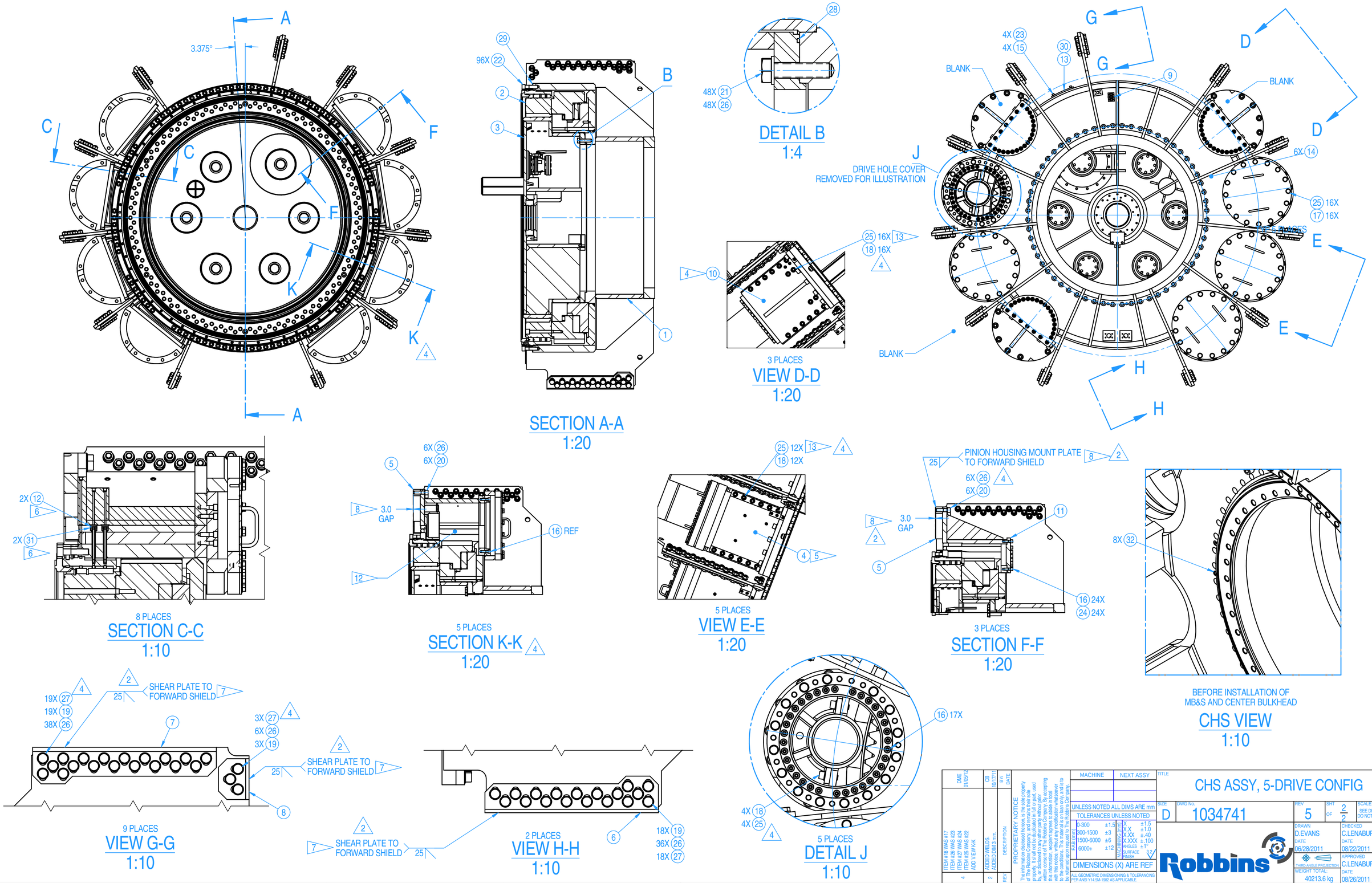

REV	DESCRIPTION	BY/DATE
4	ITEM #18 WAS #17 ITEM #26 WAS #23 ITEM #27 WAS #24 ITEM #25 WAS #22 ADD VIEW K-K	DME 01/05/12
2	ADDED WELDS. ADDED DIM 3 mm.	CB 10/17/11

PROPRIETARY NOTICE
The information disclosed hereon is the sole property of The Robbins Company, and remains their sole property. It shall not be duplicated in full or part, used by or disclosed to any other party without prior written consent of The Robbins Company. By accepting this information, recipient agrees to abide in total with this notice, without any modification whatsoever to the conditions. This material is on loan only, and is to be returned upon request to The Robbins Company.

MACHINE	NEXT ASSY

UNLESS NOTED ALL DIMS ARE mm

TOLERANCES UNLESS NOTED

FAB (mm)		MACHINING (mm)	
0-300	±1.5	X	±1.5
300-1500	±3	X.X	±1.0
1500-6000	±6	X.XX	±.40
6000+	±12	X.XXX	±.100
		ANGLES	±1°
		SURFACE FINISH	3.2

DIMENSIONS (X) ARE REF

ALL GEOMETRIC DIMENSIONING & TOLERANCING PER ANSI Y14.5M-1982 AS APPLICABLE.

TITLE: CHS ASSY, 5-DRIVE CONFIG

SIZE	DWG No.	REV	SHT	SCALE
D	1034741	5	2 OF 2	SEE DETAIL - DO NOT SCALE

Robbins

DRAWN	CHECKED
D.EVANS	C.LENABURG
DATE 06/28/2011	DATE 08/22/2011
THIRD ANGLE PROJECTION	APPROVED C.LENABURG
WEIGHT TOTAL: 40213.6 kg	DATE 08/26/2011

www.TheRobbinsCompany.com

1034741

TRC P/N 1034541
MAIN BEARING & SEAL ASSY
1:10

NOTES:

1. PREPARATION:
   a.) ALL UNFINISHED SURFACES IN THE MAIN BEARING CAVITY ARE TO BE THOROUGHLY CLEANED AND PAINTED WITH GLYPTAL #1201 ENAMEL OR GLYPTAL PRIMER #7529 OR PHENOLINE 187 PRIMER AND FINISH.
   b.) FLUSH LUBE HOLES THOROUGHLY PRIOR TO ASSEMBLY.

2. TORQUE ALL FASTENERS PER ROBBINS SPEC 5750 9900 17 EXCEPT FOR LUBRICATION MODIFICATION ON ITEM 19 SPECIFIED IN NOTE 9. ALL CLASS 12.9 FASTENERS SHALL BE TORQUED TO A VALUE MIDWAY BETWEEN CLASS 10.9 AND CLASS 12.9 SPECIFICATIONS.

3. BOND 0-RINGS PIECES (ITEMS 27-37, 42) WITH LOCTITE #404

4. WEARBANDS:
   INSTALL INNER AND OUTER WEARBANDS.
   (100°C) MAXIMUM PREHEAT ALLOWED FOR INSTALLATION.

5. TIG (GAS TUNGSTEN-ARC) WELD WITH INCONEL 82, 92 OR 625 FILLER METAL AND ARGON SHIELDING GAS (25 CFH) ALL AROUND INSIDE PERIMETER OF 30mm X 10mm SLOTS, FOUR EACH LOCATIONS. AFTER COMPLETING TIG WELD, FILL SLOT COMPLETE USING SMIG WELD PROCESS, DUAL SHIELD II WIRE OR EQUIVALENT. GRIND WELD SMOOTH AND FLUSH WITH WEAR BAND. PREHEAT AND INTERPASS TEMP SHALL NOT EXCEED 110°C. NOTE O-RING UNDER WEAR BAND.

6. DEGREASE BOTH SURFACES WITH ACETONE OR OTHER NO-RESIDUE CLEANING AGENT TO REMOVE ANY OIL OR GREASE. APPLY LOCTITE-586 WITH STIFF BRUSH TO ONE SURFACE. BRING SURFACES TOGETHER AND TORQUE M30 FASTENERS. SEE NOTE 8

7. BOND O-RINGS INTO GROOVE WITH SILICONE SEALANT IF NECESSARY TO FACILITATE ASSEMBLY.

8. COAT M30 SHCS (ITEM 21) WITH MOLYCOAT 321 R BONDED LUBRICANT AND ALLOW TO DRY PRIOR TO INSTALLATION. LUBE UNDER SCREW HEAD ONLY WITH LIGHT OIL. DO NOT USE OIL ON THREADS TO AVOID CONTAMINATING LOCTITE SURFACE.

9. INSTALL SEALS PER PRACTICE SHOWN ON SHEET 4.

10. ALLOW 24 HOURS FOR LOCTITE-586 TO SET COMPLETELY PRIOR TO INSTALLATION OF SHCS M36 (ITEM 23). COAT O-RING HARD WASHER O-RINGS, UNDERSIDE OF SOCKETHEADS AND THREADS WITH LIGHT MACHINE OIL PRIOR TO INSTALLATION.

11. FILL ALL JACKING HOLES AND SOCKETHEADS WITH SILICONE SEALANT.

12. REMOVE PLUGS ON THE MAIN BEARING TO CLEAR LUBE PORTS.

13. USE QTY 4 ITEM 23 FOR SHIPPING BRACKETS ITEM 41.

14. REMOVE PRIOR TO PESESTAL MOUNT RING INSTALLATION.

15. WELD ITEM #3 TO FORWARD SHIELD AFTER CUTTERHEAD SUPPORT INSTALLATION. TEMPORARILY REMOVE ITEM #4 FOR ACCESS. PREHEAT AND INTERPASS TEMPERATURE SHALL NOT EXCEED 110° C. NOTE O-RINGS AND SEALS NEARBY. USE HEAT TAPE AND ALTERNATING WELD SITES TO KEEP TEMPERATURE BELOW 110° C.

16. INSTALL ITEM #40 USING LOCTITE (THREAD LOCKER) IN POSITION SHOWN.

17. CLEAN WITH ACETONE AND APPLY LOCTITE 586 PRIOR TO INSTALLATION.

QTY	PART No.	DESCRIPTION	DWG No.	WT. Total	ITEM
1	2003278	SLEWING RING BEARING, 115T 25MOD	2003278	10540.6 kg	1
1	1032328	SEAL CARRIER, INNER	1032328	3216.9 kg	2
1	1034542	SEAL CARRIER, OUTER	1034542	908.7 kg	3
1	1032335	SEAL RETAINER, OUTER	1032335	302.4 kg	4
1	1032340	LANTERN RING, INNER-AFT	1032340	78.9 kg	5
2	1032341	LANTERN RING, INNER	1032341	189.6 kg	6
1	1032342	LANTERN RING, OUTER-AFT	1032342	79.8 kg	7
2	1032343	LANTERN RING, OUTER	1032343	205.2 kg	8
3	1032424	WEAR BAND, INNER-AFT	1032424	17.4 kg	9
1	1032345	WEAR BAND, OUTER-FWD	1032345	13.8 kg	10
4	1032338	SEAL, INNER	1032338	26.3 kg	11
4	1032339	SEAL, OUTER	1032339	31.2 kg	12
1	1032419	WEAR BAND, OUTER-AFT	1032419	23.4 kg	13
1	1032344	WEAR BAND, INNER-FWD	1032344	11.7 kg	14
198	1032526	O-RING HARD WASHER, M36	1032526	19.8 kg	15
6	A22158-8	WASHER, HD NW OD M30	A22158	0.4 kg	18
60	A22153-50509	SHCS, M16x50mm G12.9	A22153	7.4 kg	20
6	A22153-83409	SHCS, M30x340mm G12.9	A22153	13.2 kg	21
60	A22153-94409	SHCS, M36x440mm G12.9	A22153	243.8 kg	22
138	A22153-94609	SHCS, M36x460mm G12.9	A22153	582.8 kg	23
1	A68777-9080	DOWEL PIN, Ø20mmx80mm	A68777	0.2 kg	26
2	A111732-4087400	O-RING, Ø7mm X 8740mm LG	A111732	0.8 kg	27
3	A111732-4074250	O-RING, Ø7mm X 7425mm LG	A111732	0.9 kg	28
2	A111732-4077000	O-RING, Ø7mm X 7700mm LG	A111732	0.6 kg	29
1	A111732-4078070	O-RING, Ø7mm X 7807mm LG	A111732	0.3 kg	30
1	A111732-4074150	O-RING, Ø7mm X 7415mm LG	A111732	0.3 kg	31
3	A111732-4091150	O-RING, Ø7mm X 9115mm LG	A111732	1.2 kg	32
1	A111732-4088400	O-RING, Ø7mm X 8840mm LG	A111732	0.4 kg	34
1	A111732-4080240	O-RING, Ø7mm X 8022mm LG	A111732	0.3 kg	35
1	A111732-4088300	O-RING, Ø7mm X 8830mm LG	A111732	0.4 kg	36
1	A111732-4094150	O-RING, Ø7mm X 9415mm LG	A111732	0.4 kg	37
198	652-535	O-RING, SIZE 2-035		0.1 kg	38
198	652-529	O-RING, SIZE 2-029		0.1 kg	39
1	1033425	PROXIMITY SENSOR TARGET	1033425	0.2 kg	40
4	1032334	BRACKET, INNER SHIPPING	1032334	51.0 kg	41
1	A111732-209493	O-RING, Ø5mm x 9493mm LG	A111732	0.2 kg	42
2	654-015	LOCTITE 586, 250ml			43

PROPRIETARY NOTICE:
This information disclosed herein, is the sole property of The Robbins Company, and remains their sole property. It shall not be duplicated in full or part, used or disclosed to others without prior written permission of The Robbins Company. By accepting this information, recipient agrees to abide in total accordance with the restrictions stated hereon and to the conditions. This material is on loan only, and is to be returned upon request to The Robbins Company.

BY / DATE	DESCRIPTION	REV

MACHINE: | NEXT ASSY: 1034154
UNLESS NOTED ALL DIMS ARE mm
TOLERANCES UNLESS NOTED
FAB (mm): 0-300 ±1.5; 300-1500 ±3; 1500-6000 ±6; 6000+ ±12
MACHINED (mm): X ±1.5; X.X ±1.0; X.XX ±.40; X.XXX ±.100; ANGLES ±1°; SURFACE FINISH 3.2
DIMENSIONS (X) ARE REF
ALL GEOMETRIC DIMENSIONING & TOLERANCING PER ANSI Y14.5M-1982 AS APPLICABLE

TITLE: MAIN BEARING & SEAL ASSY
SIZE: D | DWG No.: 1034541 | REV: 0 | SHT 1 OF 5 | SCALE: SEE DETAIL - DO NOT SCALE
DRAWN: D.EVANS 08/03/2011
CHECKED: C.LENABURG 08/04/2011
APPROVED: C.LENABURG 08/05/2011
THIRD ANGLE PROJECTION
WEIGHT TOTAL: 16570.6 kg

Robbins

1034541

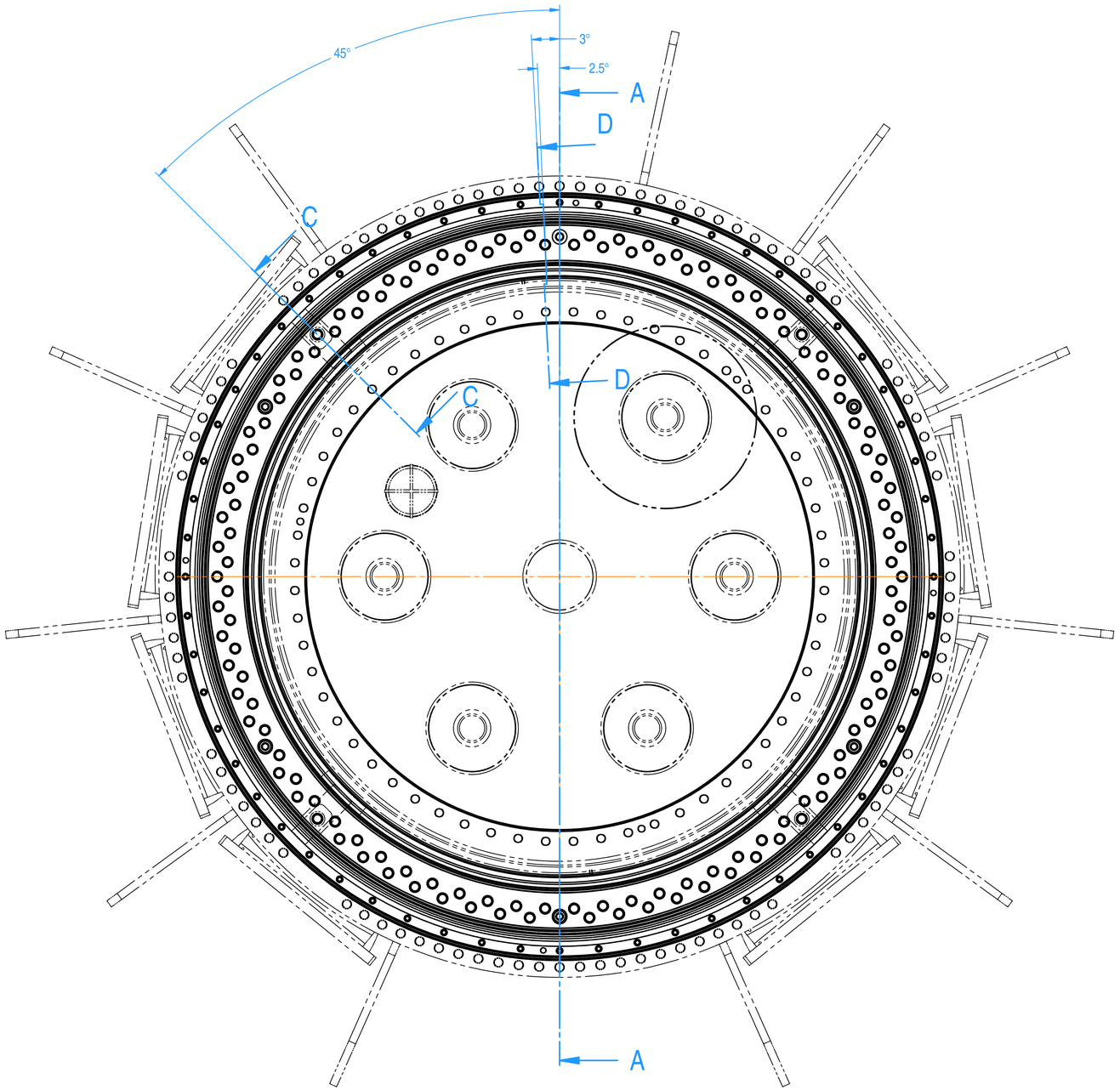

FRONT VIEW
1:10

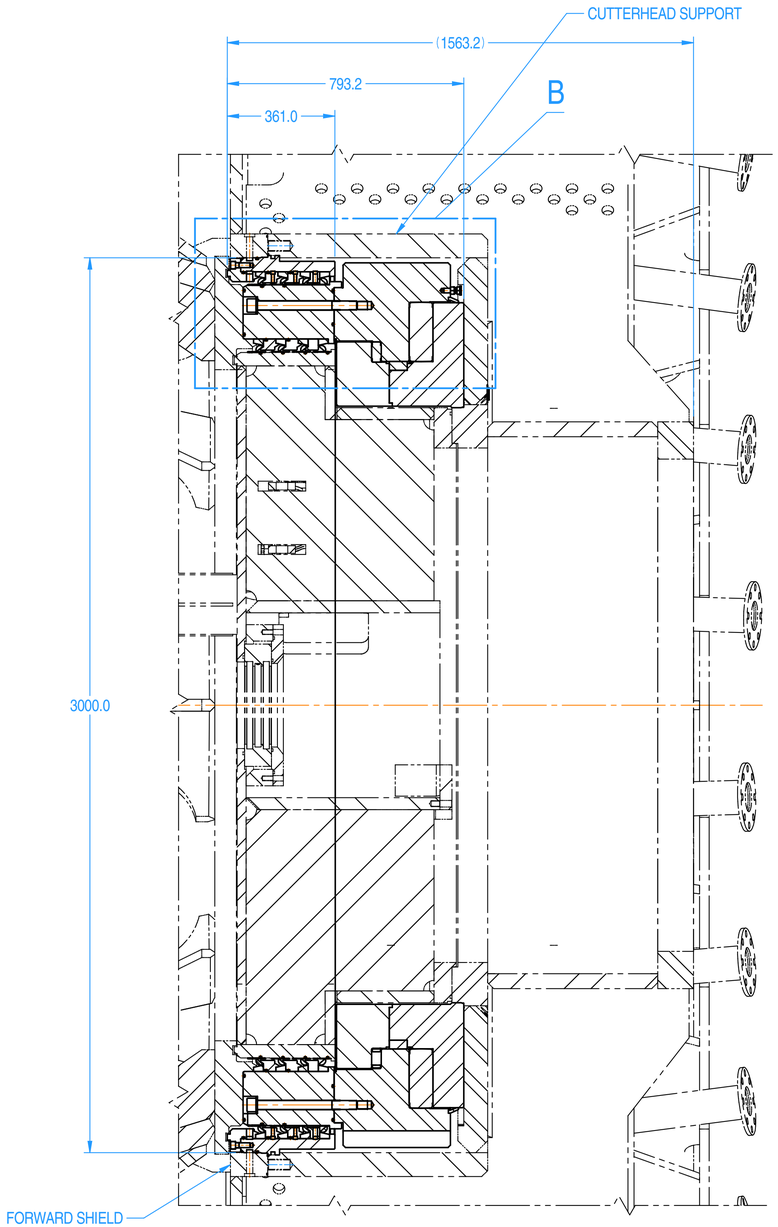

SECTION A-A
1:10

REV	DESCRIPTION	BY / DATE

PROPRIETARY NOTICE
The information disclosed hereon is the sole property of The Robbins Company, and remains their sole property. It shall not be duplicated in full or part, used by or disclosed to any other party without prior written consent of The Robbins Company. By accepting this information, recipient agrees to abide in total with this notice, without any modification whatsoever to the conditions. This material is on loan only, and is to be returned upon request to The Robbins Company.

MACHINE	NEXT ASSY
	1034154

UNLESS NOTED ALL DIMS ARE mm

TOLERANCES UNLESS NOTED

FAB (mm)		MACHINING (mm)	
0-300	±1.5	X	±1.5
300-1500	±3	X.X	±1.0
1500-6000	±6	X.XX	±.40
6000+	±12	X.XXX	±.100
		ANGLES	±1°
		SURFACE FINISH	3.2

DIMENSIONS (X) ARE REF

ALL GEOMETRIC DIMENSIONING & TOLERANCING PER ANSI Y14.5M-1982 AS APPLICABLE.

TITLE
MAIN BEARING & SEAL ASSY

SIZE	DWG No.	REV	SHT	SCALE
D	1034541	0	2 OF 5	SEE DETAIL - DO NOT SCALE

Robbins

DRAWN	CHECKED
D.EVANS	C.LENABURG
DATE 08/03/2011	DATE 08/04/2011
THIRD ANGLE PROJECTION	APPROVED C.LENABURG
WEIGHT TOTAL: 16570.6 kg	DATE 08/05/2011

www.TheRobbinsCompany.com

1034541

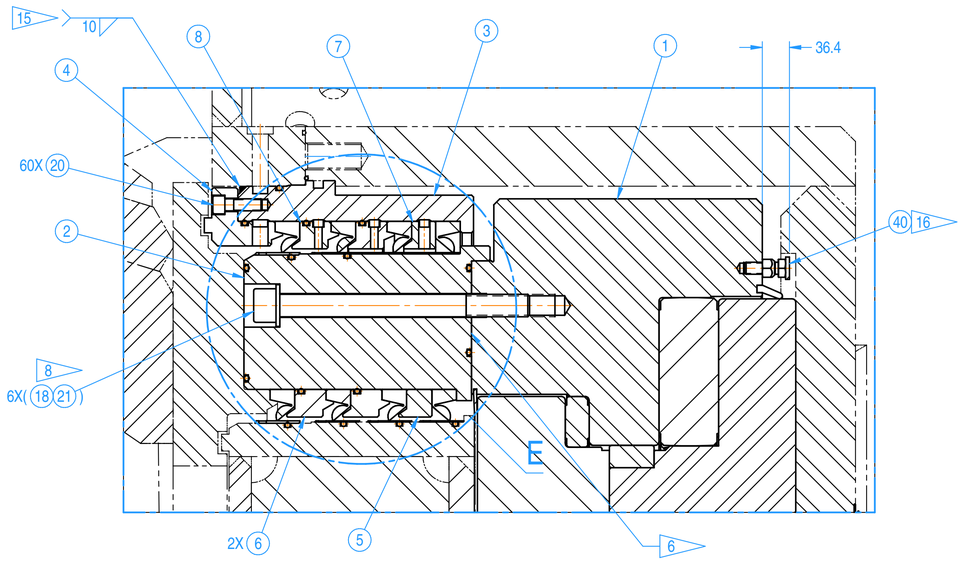

DETAIL B
1:4

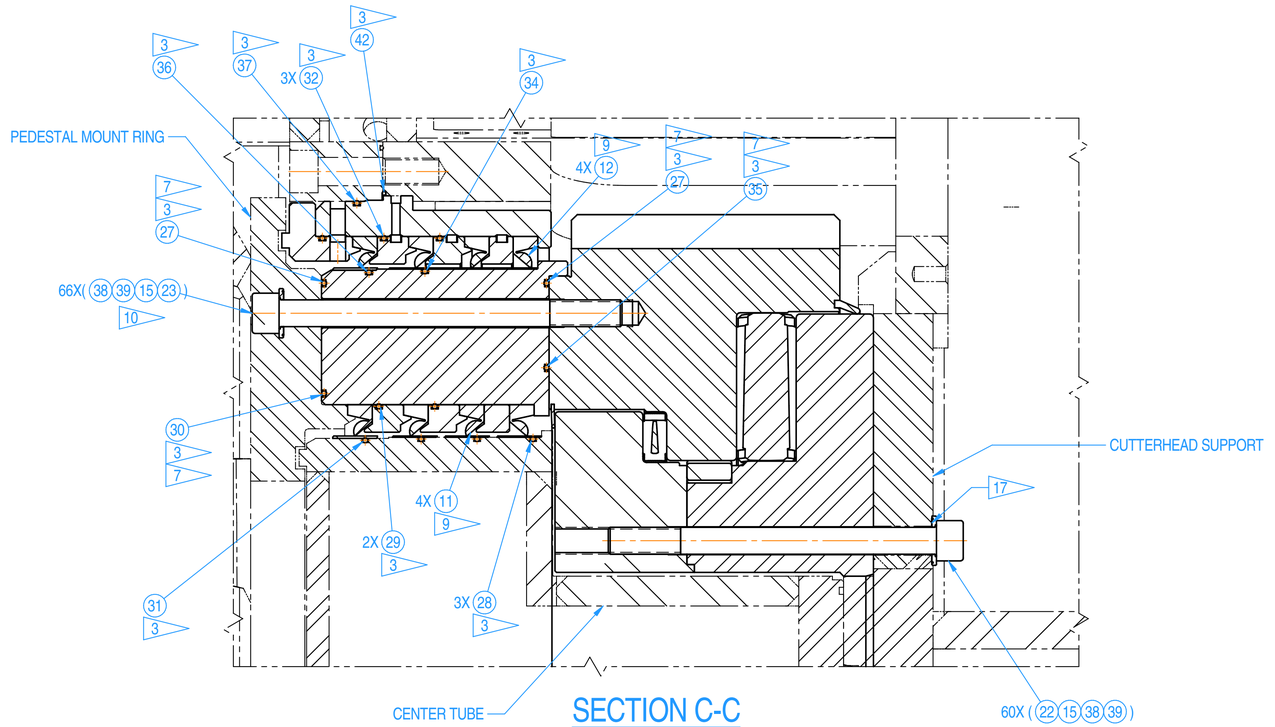

SECTION C-C
1:4

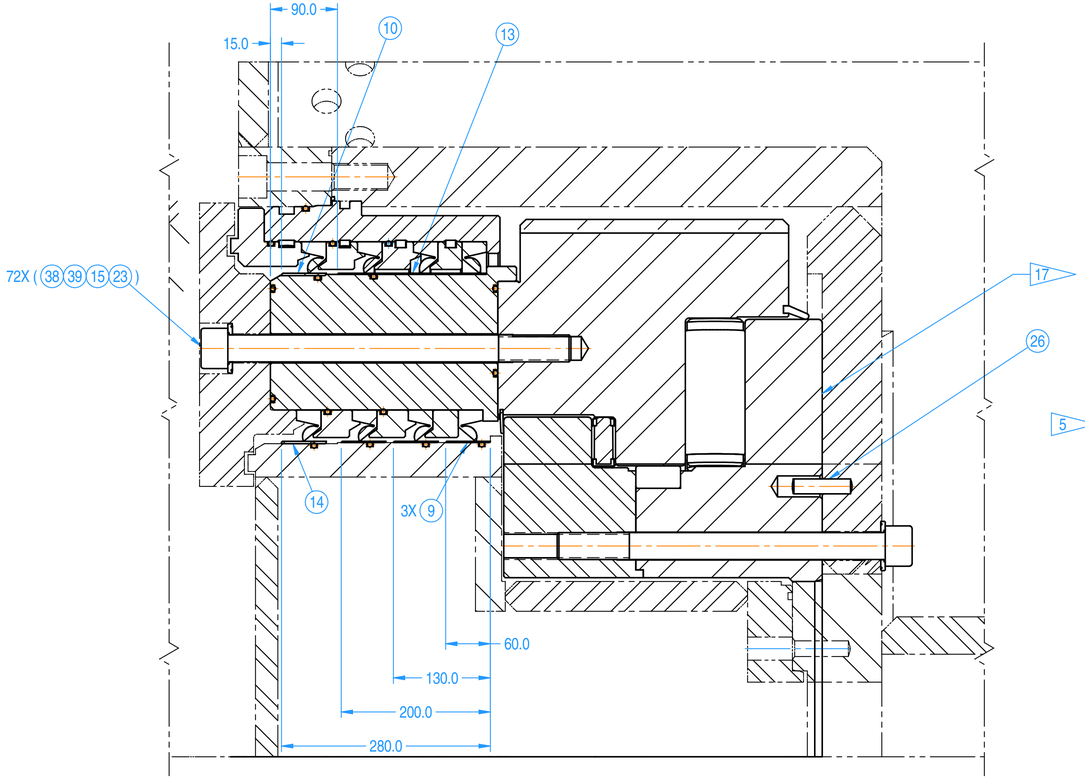

SECTION D-D
1:4

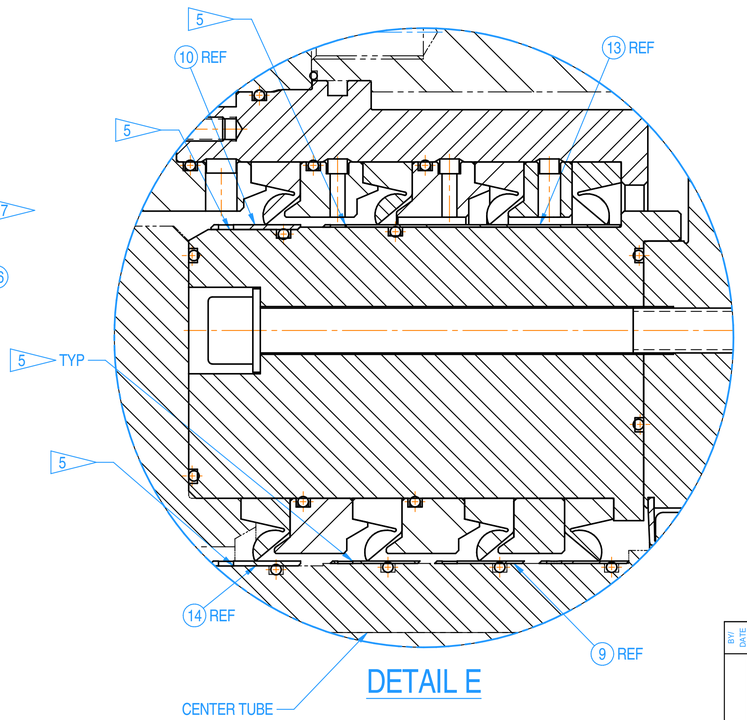

DETAIL E

PROPRIETARY NOTICE
The information contained herein is the sole property of The Robbins Company, and remains their sole property. It shall not be duplicated in full or part, used for tendering or manufacturing purposes without the written consent of The Robbins Company. By accepting this information, recipient agrees to abide in total by the foregoing restrictions. This material is on loan only, and is to be returned upon request to The Robbins Company.

BY	DATE	DESCRIPTION	REV

MACHINE	NEXT ASSY
	1034154

UNLESS NOTED ALL DIMS ARE mm
TOLERANCES UNLESS NOTED
CAST IRON
0-300 ±1.5
300-1500 ±3
1500-6000 ±6
6000+ ±12
MACHINED
X ±1.5
X.X ±1.0
X.XX ± .40
X.XXX ±.100
ANGLES ±1°
SURFACE 3.2
DIMENSIONS (X) ARE REF
ALL GEOMETRIC DIMENSIONING & TOLERANCING PER ANSI Y14.5M-1982 AS APPLICABLE.

TITLE: MAIN BEARING & SEAL ASSY

SIZE	DWG No.	REV	SHT	SCALE
D	1034541	0	3 OF 5	SEE DETAIL, DO NOT SCALE

DRAWN	CHECKED
D.EVANS	C.LENABURG
DATE 08/03/2011	DATE 08/04/2011

THIRD ANGLE PROJECTION

APPROVED	WEIGHT TOTAL:
C.LENABURG	16570.6 kg
DATE 08/05/2011	

Robbins
www.TheRobbinsCompany.com

1034541

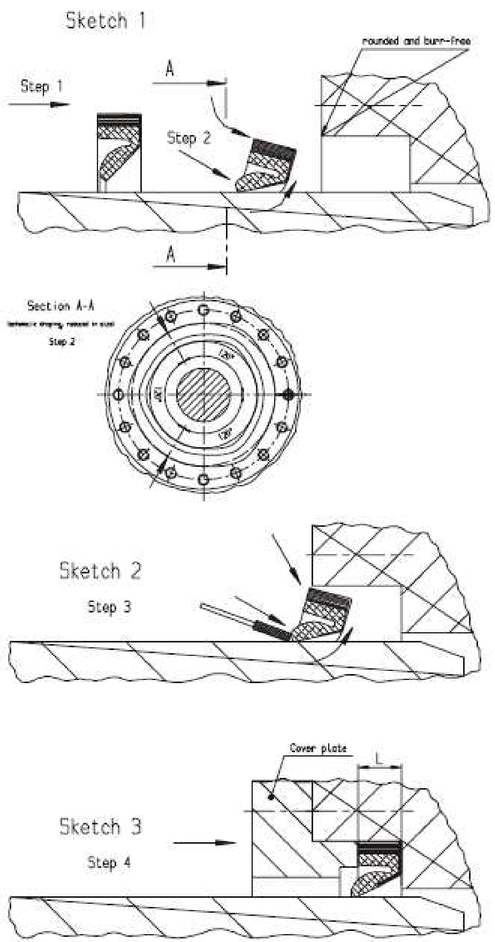

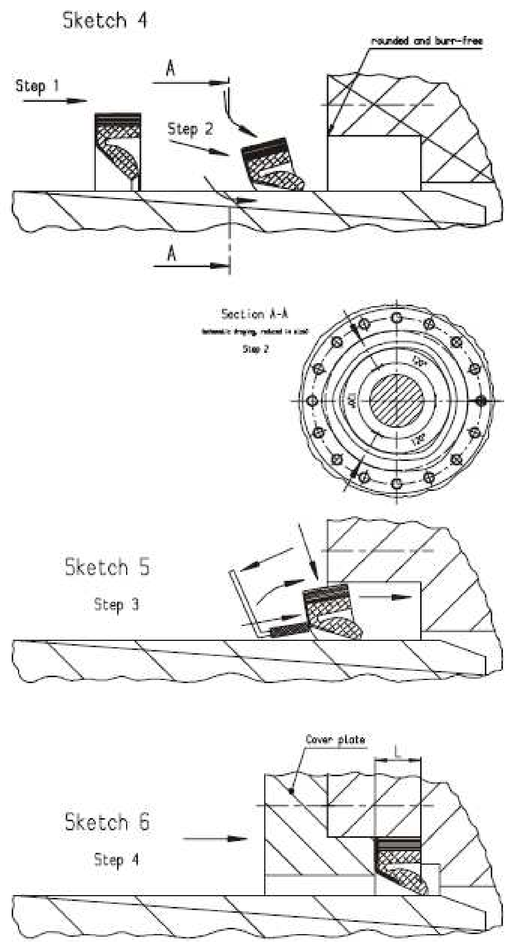

THE INSTALLATION INSTRUCTIONS IS SHOWING, BY WAY OF EXAMPLE, THE INSTALLATION OF ONE SINGLE SHAFT SEAL. IN CASE THAT A NUMBER OF SHAFT SEALS ARE USED FITTED IN A ROW, EACH SINGLE SEAL MUST BE PUSHED INDIVIDUALLY INTO POSITION AS SHOWN. THE SKETCHES 1, 2 AND 3 ARE SHOWING THE INSTALLATION IN BOTTOM SIDE DIRECTION. THE SKETCHES 4, 5 AND 6 ARE SHOWING THE INSTALLATION IN FRONT SIDE DIRECTION. THE SEAL HOUSING MUST BE CLEAN, BURR-FREE AND THE EDGES OF THE HOUSING SHOULD BE ROUNDED. BOTH THE SEAL AND THE HOUSING SHOULD BE LIGHTLY GREASED PRIOR TO INSTALLATION.

STEP 1:
PLACE THE SEAL IN FRONT OF THE HOUSING. THE SEALS ARE MANUFACTURED WITH AN OVERSIZED OUTER DIAMETER COMPARED TO THE HOUSING OUTER DIAMETER. THE CORRECT DEGREE OF RADIAL COMPRESSION OF SEAL LIP ON THE SHAFT IS ATTAINED ONLY AFTER CORRECT SEAL INSTALLATION INTO THE HOUSING.

STEP 2:
IN ORDER TO DISTRIBUTE THE SEAL VOLUME AS UNIFORMILY AS POSSIBLE INSIDE THE SEAL HOUSING, THE SEAL HAS TO BE PUSHED INTO THE HOUSING IN THREE PLACES CONCURRENTLY, SEAL > APPROXIMATELY Ø2000mm AT FOUR PLACES CONCURRENTLY. SEE SKETCH SECTION A-A. CARE SHOULD BE TAKEN AT THE EDGES OF THE HOUSING. FOLLOWING TO THIS, THE REST OF THE RINGS IS PRESSED IN AS UNIFORMILY AS POSSIBLE AND PUSHED INTO END POSITION.

STEP 3:
PREVIOUSELY TO THE COVER PLATE INSTALLATION, ENSURE THE PROPER ADJOINING OF THE COMPLETE SEAL OUTER DIAMETER AT THE BASE OF THE SEAL HOUSING. IF THIS IS NOT THE CASE, THE SEAL CAN BE PUSHED INTO THE RIGHT POSITION BY USING A BLUNT TOOL, FIXED TO THE SEAL LIP (SEE SKETCH 2) OF TO SEAL HINGE (SEE SKETCH 5). THIS PROCEDURE SHOULD BE APPLIED UNIFORMLY ON THE CIRCUMFERENCE.

STEP 4:
INSTALL THE COVER PLATE.
THE CLAMPING SCREWS SHOULD BE TIGHTENED CROSSWISE TILL THE SEAL IS AXIALLY COMPRESSED TO THE RECOMMENDED HOUSING LENGTH 'L'.

1034541

REV	DESCRIPTION	BY/DATE

PROPRIETARY NOTICE
The information disclosed hereon is the sole property of The Robbins Company, and remains their sole property. It shall not be duplicated in full or part, used by, or disclosed to any other party without prior written consent of The Robbins Company. By accepting this information, recipient agrees to abide in total with this notice, without any modification whatsoever to the conditions. This material is on loan only, and is to be returned upon request to The Robbins Company.

MACHINE	NEXT ASSY
	1034154

UNLESS NOTED ALL DIMS ARE mm
TOLERANCES UNLESS NOTED

FAB (mm)		MACHINING (mm)	
0-300	±1.5	X	±1.5
300-1500	±3	X.X	±1.0
1500-6000	±6	X.XX	±.40
6000+	±12	X.XXX	±.100
		ANGLES	±1°
		SURFACE FINISH	3.2

DIMENSIONS (X) ARE REF
ALL GEOMETRIC DIMENSIONING & TOLERANCING PER ANSI Y14.5M-1982 AS APPLICABLE.

TITLE
MAIN BEARING & SEAL ASSY

SIZE	DWG No.	REV	SHT	SCALE:
D	1034541	0	4 OF 5	SEE DETAIL - DO NOT SCALE

Robbins

DRAWN	CHECKED
D.EVANS	C.LENABURG
DATE 08/03/2011	DATE 08/04/2011
THIRD ANGLE PROJECTION	APPROVED C.LENABURG
WEIGHT TOTAL: 16570.6 kg	DATE 08/05/2011

www.TheRobbinsCompany.com

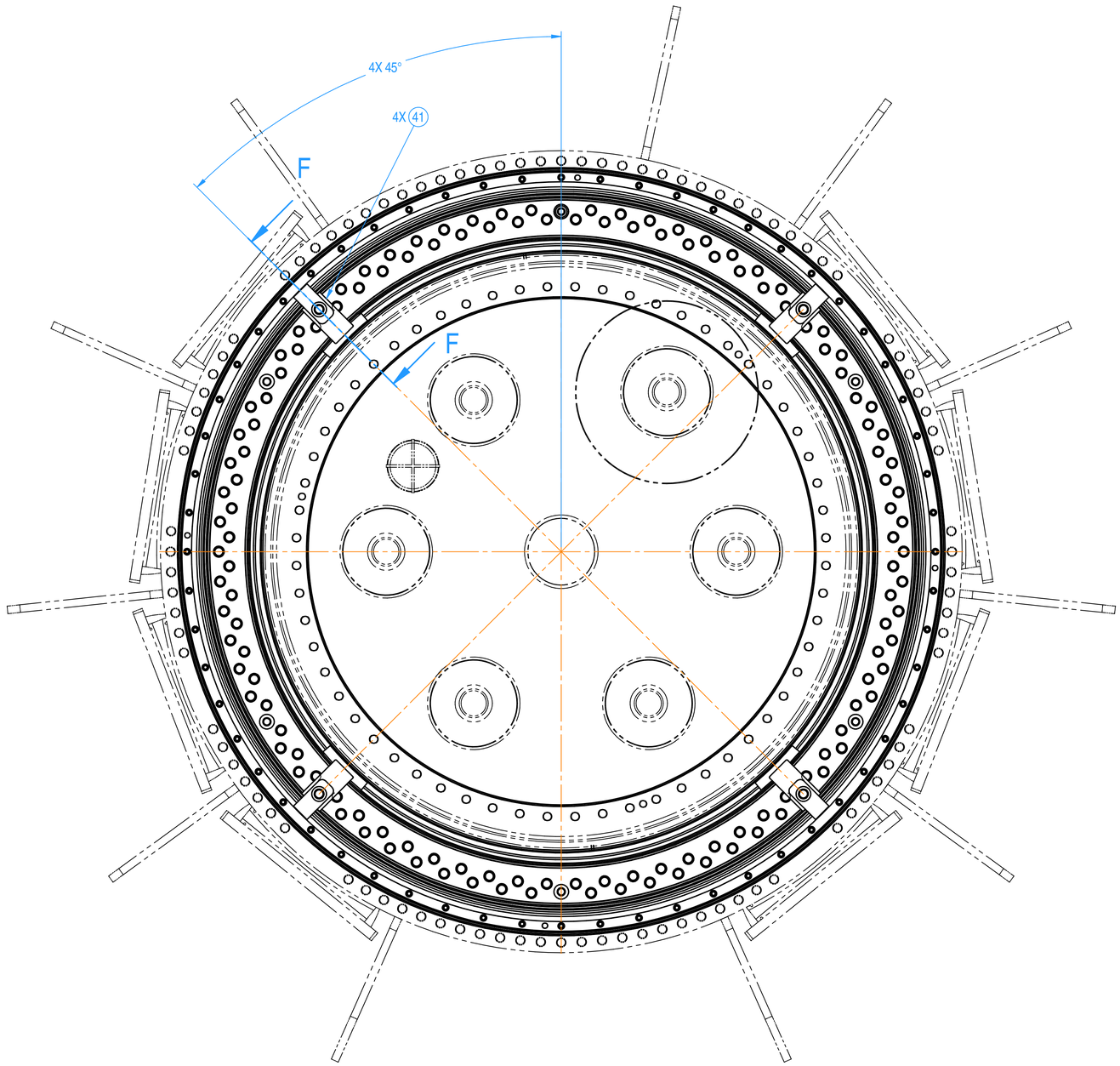

SHIPPING BRACKETS LOCATIONS
1:10

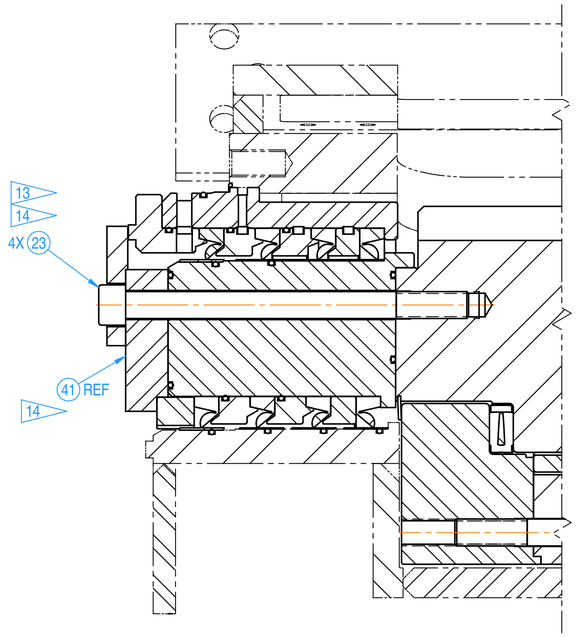

SECTION F-F
1:4

1034541

REV	DESCRIPTION	BY/DATE

PROPRIETARY NOTICE
The information disclosed hereon, is the sole property of The Robbins Company, and remains their sole property. It shall not be duplicated in full or part, used by, or disclosed to any other party without prior written consent of The Robbins Company. By accepting this information, recipient agrees to abide in total with this notice, without any modification whatsoever to the conditions. This material is on loan only, and is to be returned upon request to The Robbins Company.

MACHINE	NEXT ASSY
	1034154

UNLESS NOTED ALL DIMS ARE mm

TOLERANCES UNLESS NOTED

FAB (mm)		MACHINING (mm)	
0-300	±1.5	X	±1.5
300-1500	±3	X.X	±1.0
1500-6000	±6	X.XX	±.40
6000+	±12	X.XXX	±.100
		ANGLES	±1°
		SURFACE FINISH	3.2

DIMENSIONS (X) ARE REF

ALL GEOMETRIC DIMENSIONING & TOLERANCING PER ANSI Y14.5M-1982 AS APPLICABLE.

TITLE: MAIN BEARING & SEAL ASSY

SIZE	DWG No.	REV	SHT	SCALE
D	1034541	0	5 OF 5	SEE DETAIL - DO NOT SCALE

Robbins

DRAWN	CHECKED
D.EVANS	C.LENABURG
DATE 08/03/2011	DATE 08/04/2011
THIRD ANGLE PROJECTION	APPROVED C.LENABURG
WEIGHT TOTAL: 16570.6 kg	DATE 08/05/2011

www.TheRobbinsCompany.com

Load Spectrum EPB w/Cutter TBM's

TRC Proprietary Information

	Case 1	Case 2	Case 3
Thrust Load (kN)	$F_{a1} = 0.7 * (F_{FC} + F_E)$	$F_{a2} = F_{FC} + F_E$	$F_{a3} = F_t$
Moment Load (kNm)	$M_1 = 0.7*(F_E*\delta + u*F_E*L_2) + W*L_1$	$M_2 = F_E*\delta + u*F_E*L_2 + W*L_1$	$M_3 = W*L_1$
Radial Load (kN)	$F_1 = W + 0.7*0.0375*F_T$	$F_{r2} = W + 0.0375*F_T$	$F_{r3} = W$
Speed	N	N	N
Time Shared (%)	90	10	0

F_T (kN) : Total equipped thrust = $120*(\pi/4)*D^2*9.80655$

F_{FC} (kN) : Normal thrust = $0.18*F_T$

F_E (kN) : Offset thrust = $0.125*F_T$

δ (m) : Offset = .22*D

D (m) : Outside diameter of TBM

L_1 (m) : Distance between bearing and center of gravity of the cutterhead = $0.6*L_2$

L_2 (m) : Distance between cutter face = $1.6*(D/5)^{.5}$

W (kN) : Weight of cutterhead = $D^2*18.0648$

N (rpm) : Cutterhead speed

L (m) : Tunnel Length

V (m/h) : Excavation Speed

L_{10} (hr) : Bearing life > 10,000 hours

EPB TRADITIONAL
THE ROBBINS COMPANY EPB TBM MAIN BEARING ANALYSIS PROGRAM
WRITTEN BY J.MCNEELEY FERBUARY 2010
THIS ANALYSIS ASSUME RIGID MOUNTING STRUCTURE AND A23 = 1

OPERATOR:J.MCNEELEY DATE: 5-22-2012
EPB PROJECT NAME:STD EPB ESTIMATE #;
EQUIPPED THRUST: 35856 kN

BEARING IDENTIFIER: TR3198A1

ROW	Dm mm	ALPHA deg	Z	Lwe mm	Dw mm	RA mm	Ca kN	Cr kN	PSTAT MPa	PDYN MPa
1.0	2495.0	90.0	74.0	148.0	80.0	0.018536.0		0.0	2900.0	2100.0
2.0	2361.0	90.0	179.0	37.0	32.0	0.0	3742.0	0.0	2900.0	2100.0
3.0	2275.0	0.0	182.0	57.0	30.0	0.0	0.0	2680.0	2900.0	2100.0

AXIAL CLEARANCE = 0 mm RADIAL CLEARANCE = 0 mm

LOAD CASE 1 LABEL: 70% ECCENTRIC THRUST AT .13 TUNNEL DIAMETER (DYNAMIC)
FA= 7655.256 kN FR= 1641.242 kN M= 4871.462 kN-m
RPM= 2 % OPERATING TIME= 90
ANALYSIS RESULTS

ROW	Qmax kN	PoMAX N/mm^2	LDZONE deg	L10 E6 revs
1.00	211.19	1140.32	360.00	6.11
2.00	0.00	0.00	0.00	99999.00
3.00	36.62	1257.87	180.00	5.14

TOTAL SYSTEM LIFE= 3.014254

LOAD CASE 2 LABEL: ECCENTRIC THRUST AT .13 TUNNEL DIAMETER (DYNAMIC)
FA= 10936.08 kN FR= 2044.622 kN M= 6637.873 kN-m
RPM= 2 % OPERATING TIME= 10
ANALYSIS RESULTS

ROW	Qmax kN	PoMAX N/mm^2	LDZONE deg	L10 E6 revs
1.00	294.37	1346.29	360.00	1.99
2.00	0.00	0.00	0.00	99999.00
3.00	45.63	1403.96	180.00	2.47

TOTAL SYSTEM LIFE= 1.189289

LOAD CASE 3 LABEL: CENTRIC THRUST (STATIC)
FA= 35856 kN FR= 700.0223 kN M= 749.8386 kN-m
RPM= 0 % OPERATING TIME= 0
ANALYSIS RESULTS

ROW	Qmax kN	PoMAX N/mm^2	LDZONE deg	L10 E6 revs
1.00	500.79	1755.97	360.00	0.11
2.00	0.00	0.00	0.00	99999.00
3.00	15.62	821.49	180.00	87.98

TOTAL SYSTEM LIFE= .1105529

DYNAMIC ROLLER PRESSURE OK

STATIC ROLLER PRESURE IS OK

L10 FOR ALL LOAD CASES= 2.61325 (21777.52 hours)

MODEL EPB2016-376/377
SECTION 7 • Forward Shield Assembly

1. Forward shield assembly drawing
2. Man lock specification drawing
3. Man lock approval drawings
4. Man lock schematic
5. Material lock specification drawing
6. Material lock approval drawings

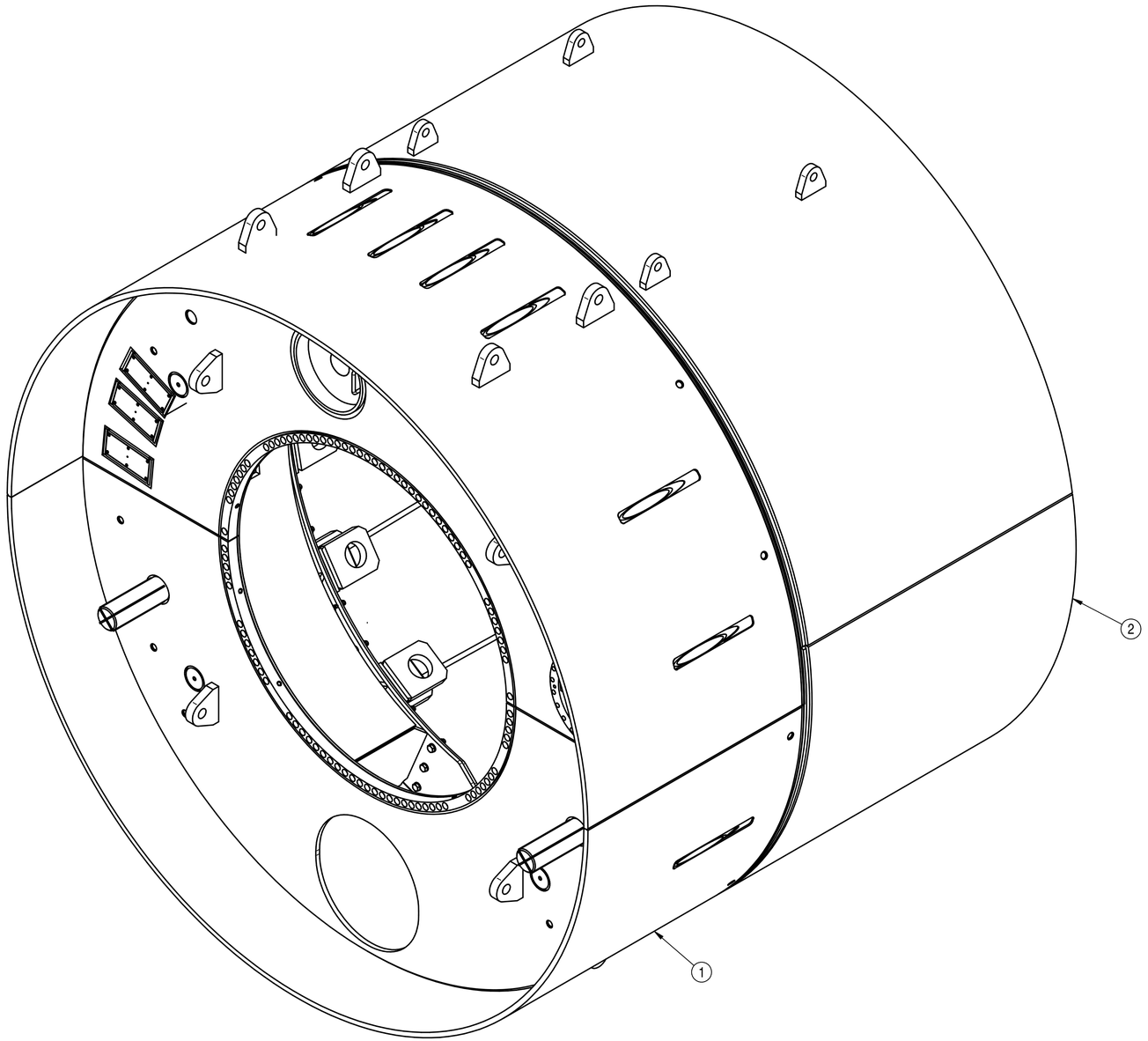

QTY	PART No.	DESCRIPTION	DWG No.	WT. Total	ITEM
1	1036080	FWD SHIELD RING A MACH	1036080	40557.3	1
1	1036091	FWD SHIELD RING B MACH	1036091	28064.1	2
1	1036362	MANLOCK, 3 + 3 CAPACITY	1036362	6231.6	3
1	1036363	HATCH, MANLOCK	1036363	303.4	4
2	1036461	BRACKET, MANLOCK	1036461	48.6	5
1	1034772	MATERIAL LOCK	1034772	981.5	7
2 18	1001199	INJ PORT ASSEMBLY, Ø51mm	1001199	218.6	8
2	1031444	BALL VALVE, 4" FLANGED ASSY	1031444	79.7	9
5	1001198	EARTH PRESS SNSR ASSEMBLY ,Ø30mm	1001198	99.7	10
12	1001887	SLEEVE, PIN	1001887	22.0	11
1 8	1050028	LUBE PORT WLDT	1050028	29.3	12
16	A22151-50655	HHCS, M16x65mm C8.8	A22151	2.2	13
108	A22152-91305	HHCS, M36x130mm C8.8	A22152	162.2	14
12	A22152-70805	HHCS, M24x80mm C8.8	A22152	5.0	15
2 72	A22152-50555	HHCS, M16x55mm C8.8	A22152	9.0	16
24	A22152-70755	HHCS, M24x75mm C8.8	A22152	9.5	17
2 88	A22157-5	WASHER, SM OD M16	A22157	0.5	18
222	A22158-9	WASHER, HD NW OD M36	A22158	24.5	19
48	A22158-7	WASHER, HD NW OD M24	A22158	1.6	20
2 88	A22154-55	NUT, M16 C8	A22154	3.1	21
114	A22154-95	NUT, M36 C8	A22154	47.1	22
12	A22154-75	NUT, M24 C8	A22154	1.4	23
6	1001888	HEX SHOULDER BOLT, M36x160mm	1001888	11.1	24
2 1	1052289	PENETRATOR INSTALLATION	1052289	4.8	25
2 2	1052290	PENETRATOR INSTALLATION #2	1052290	73.0	26

NOTES:

1. REMOVE ALL BURRS & BREAK SHARP EDGES.
2. ALL WELDING SHALL MEET THE REQUIREMENTS OF THE LATEST EDITION OF THE AWS STRUCTURAL WELDING CODE - ALL SECTIONS AS APPLICABLE UNLESS OTHERWISE NOTED. USE E70XX LOW HYDROGEN ELECTRODES OR EQUIVALENT.
3. PAINT PER ORDER SPECIFICATIONS. MACHINED SURFACES NOT TO BE PAINTED, BUT PROTECTED BY OTHER SUITABLE METHODS.
4. TORQUE ALL FASTENERS PER ROBBINS SPEC 55750 9900 17.

2 WELD MANLOCK BRACKET USING MANLOCK FOR LOCATION AT ASSEMBLY.

6 WELD TO BE WATER TIGHT.

7. SEE 1034809 FOR FORWARD SHIELD PLUMBING DIAGRAM.

8 POSITION PIPE , THEN THREAD 90° ELBOW AND FITTING. POSITION UNIT COMPLETE PRIOR SEAL WELD. USE A SMALL STEEL TAB TO WELD PIPE TO BULKHEAD FOR ADDITIONAL SUPPORT.

2 9 NOT SHOWN ON DRAWING.

TRC P/N 1002832
FWD SHIELD ASSEMBLY
1:20

REV	DESCRIPTION	REV'D BY/ DATE	APP'D BY/ DATE
2	REVISED BOM- ADDED 25 & 26 REVISED QTYS FOR -8, -16, -18, -21, ADDED NOTE 9, ROTATED HATCH 180, REVISED SHT 3	JDS 8/21/2012	JH 8/24/2012
1	ITEM # 12 PART NO. 1050028 WAS 1034638. REVISED SHT. 2. ADDED FLAG NOTE 8.	CB 6/20/12	JH 6/22/12

PROPRIETARY NOTICE
The information disclosed herein, is the sole property of The Robbins Company and is furnished in confidence. It shall not be duplicated in full or part, used by, or disclosed to any other party without the express written consent of The Robbins Company. By accepting this information, recipient agrees to return it upon request and to protect it from duplication, use or disclosure to the conditions. This material is on loan only, and is to be returned upon request. Any use of this material for the benefit of any party other than The Robbins Company is strictly prohibited.

MACHINE	NEXT ASSY
EPB2016-378/	1002830
377	

UNLESS NOTED ALL DIMS ARE mm
TOLERANCES UNLESS NOTED

FRACTIONS	DECIMALS	ANGLES
0-300 ±1.5	X ±1.5	
300-1500 ±3	X.X ±1.0	
1500-6000 ±6	X.XX ±.40	
6000+ ±12	X.XXX ±.100	MAX/LES ±1°
THIRD ANGLE PROJECTION		SURFACE FINISH 125

DIMENSIONS (X) ARE REF.
ALL GEOMETRIC DIMENSIONING & TOLERANCING PER ANSI Y14.5-2009

TITLE: FWD SHIELD ASSEMBLY

SIZE	DWG No.	REV	SHT	OF	SCALE
D	1002832	2	1	3	SEE DETAIL
					DO NOT SCALE

DRAWN BY	R.FINE
DATE	02/27/2012
CHECKED STANDARDS	J.HEINEMAN
CHECKED DESIGN	J.HEINEMAN
WEIGHT TOTAL	78661.6 kg
APPROVED BY	J.HEINEMAN
DATE	02/27/2012

Robbins

www.TheRobbinsCompany.com

1002832

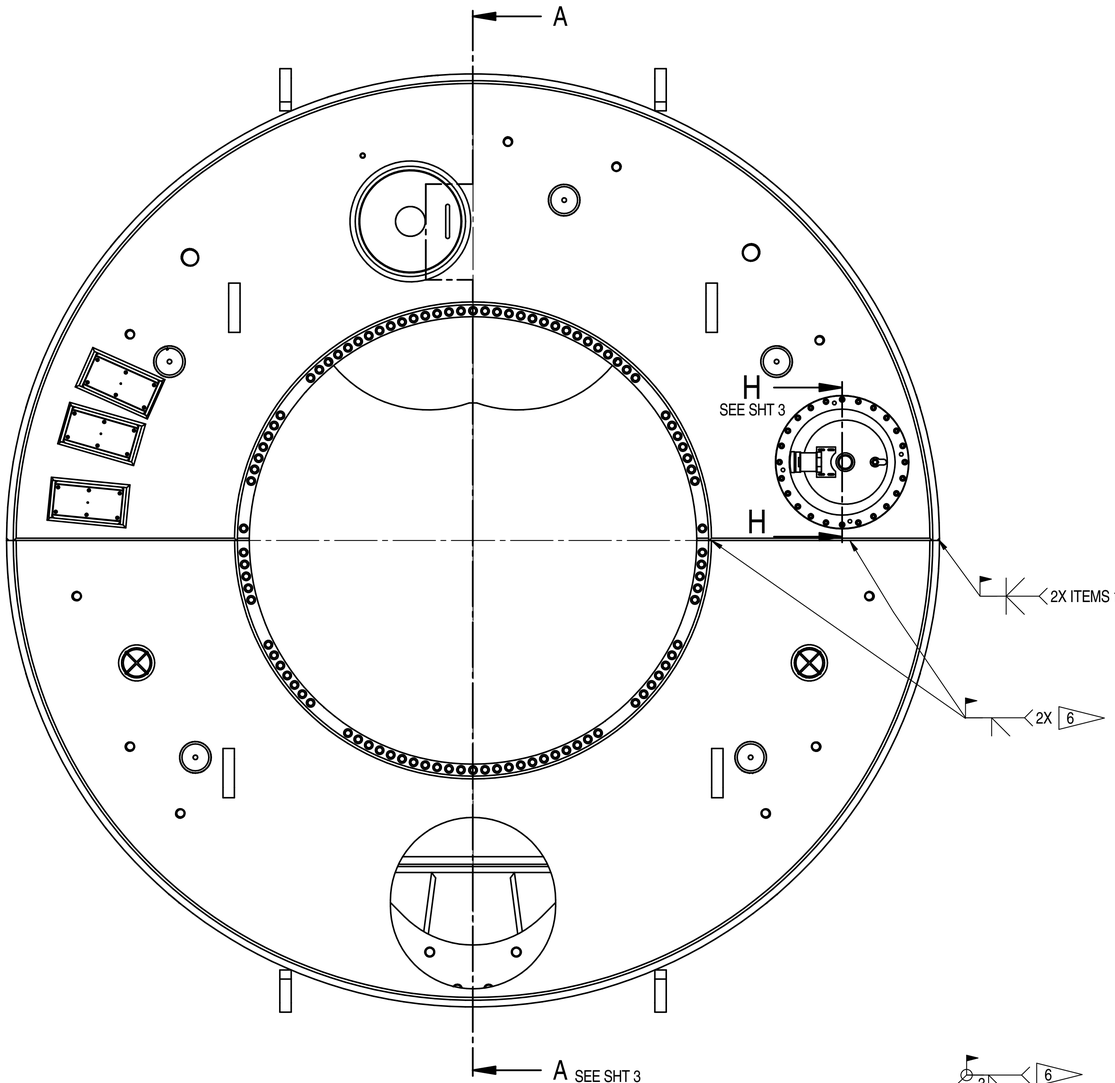

TRC P/N 1002832
FWD SHIELD ASSEMBLY
LOOKING AFT
1:20

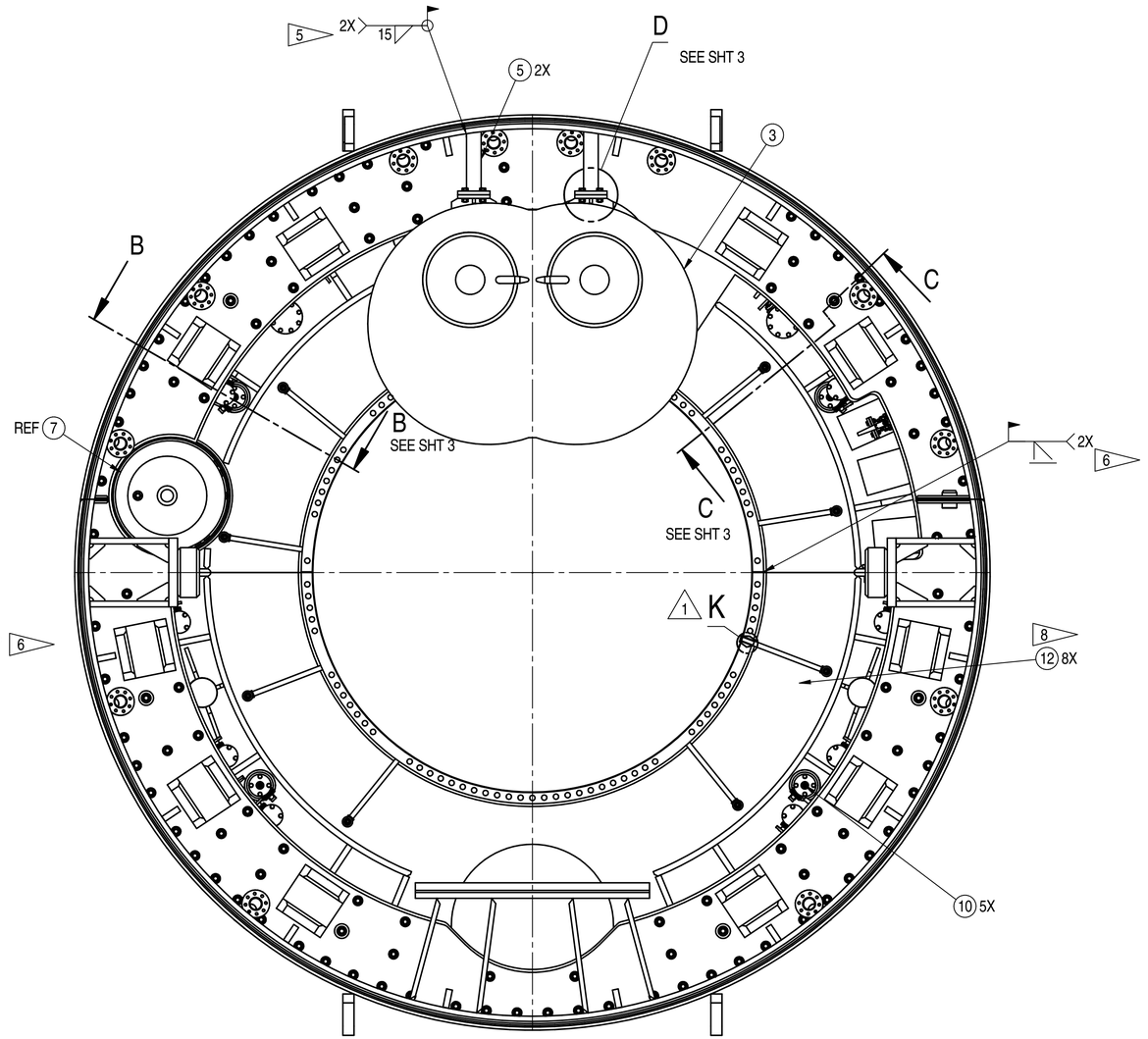

TRC P/N 1002832
FWD SHIELD ASSEMBLY
LOOKING FWD
1:20

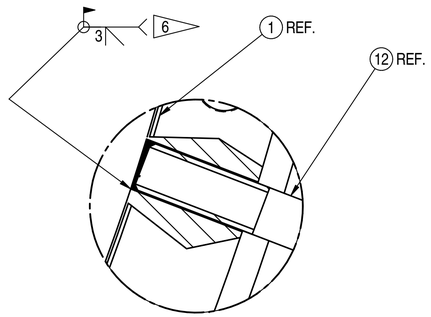

1 DETAIL K
1:2
(8 PLACES)

REV	DESCRIPTION	REV'D BY / DATE	APP'D BY / DATE
1	ADDED DETAIL K. ADDED FLAG NOTE 8.	CB 6/20/12	JH 6/22/12

PROPRIETARY NOTICE
The information disclosed herein is the sole property of The Robbins Company and is furnished in confidence. It shall not be duplicated in full or part, used by, or disclosed to any person, firm or corporation without the written consent of the Company. By accepting this information, recipient agrees to use it solely for the purpose for which it is intended and to whatsoever to the conditions. This material is on loan only, and is to be returned to The Robbins Company upon request.

MACHINE	NEXT ASSY
EPB2016-376/	1002830
377	

UNLESS NOTED ALL DIMS ARE mm

TOLERANCES UNLESS NOTED

0-300	±1.5
300-1500	±3
1500-6000	±6
6000+	±12

THIRD ANGLE PROJECTION

DIMENSIONS (X) ARE REF

ALL GEOMETRIC DIMENSIONING & TOLERANCING PER ANSI Y14.5-2009

X	±1.5
X.X	±1.0
X.XX	±.40
X.XXX	±.100
ANGLES	±1°
SURFACE FINISH	125

TITLE
FWD SHIELD ASSEMBLY

SIZE	DWG No.	REV	SHT	SCALE
D	1002832	2	2 OF 3	SEE DETAIL

DO NOT SCALE

DRAWN BY: R.FINE
DATE: 02/27/2012
CHECKED STANDARDS: J.HEINEMAN
CHECKED DESIGN: J.HEINEMAN
WEIGHT TOTAL: 78661.6 kg
APPROVED BY: J.HEINEMAN
DATE: 02/27/2012

Robbins

www.TheRobbinsCompany.com

1002832

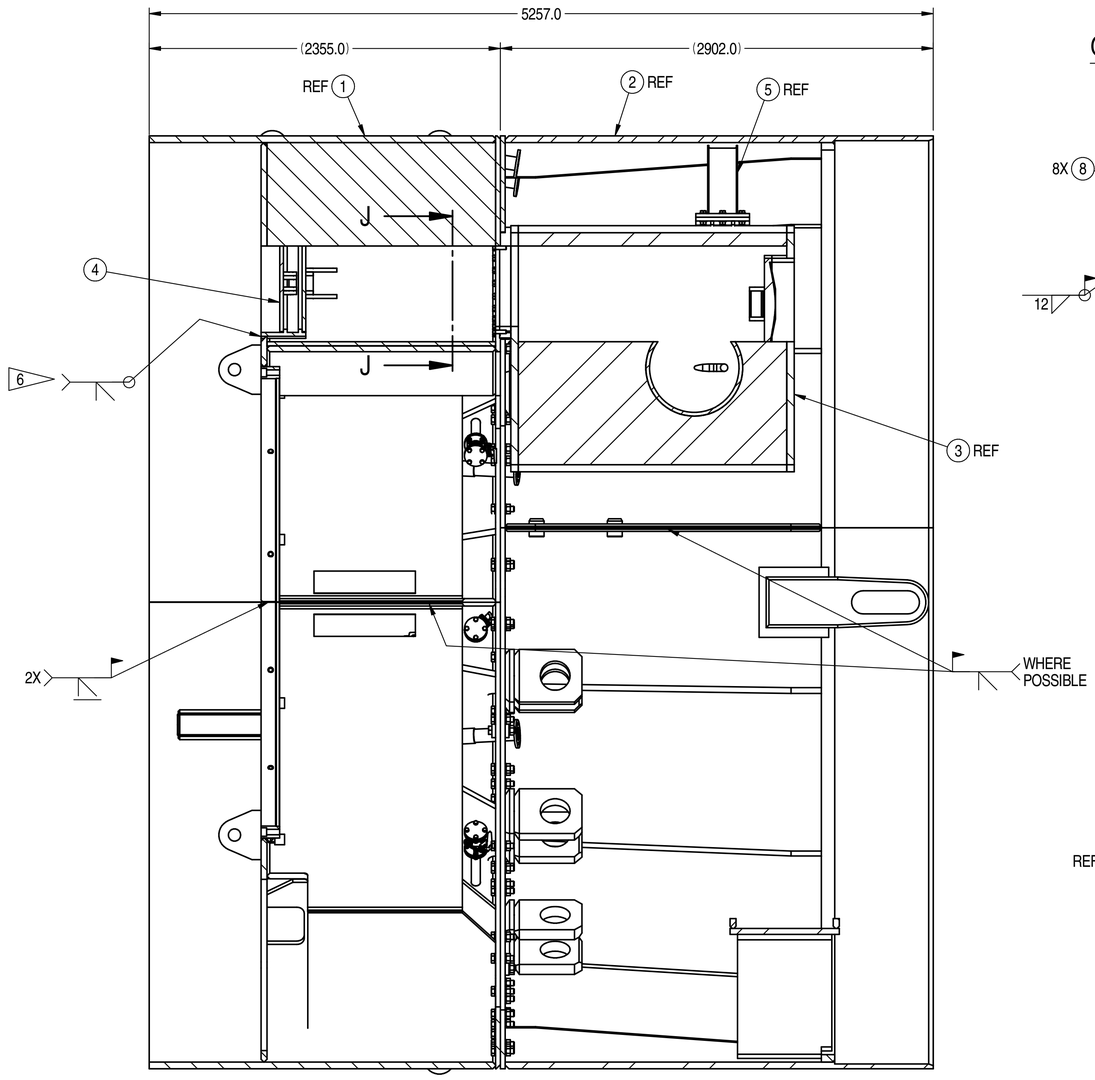

SECTION A-A
1:20
FROM SHT 2

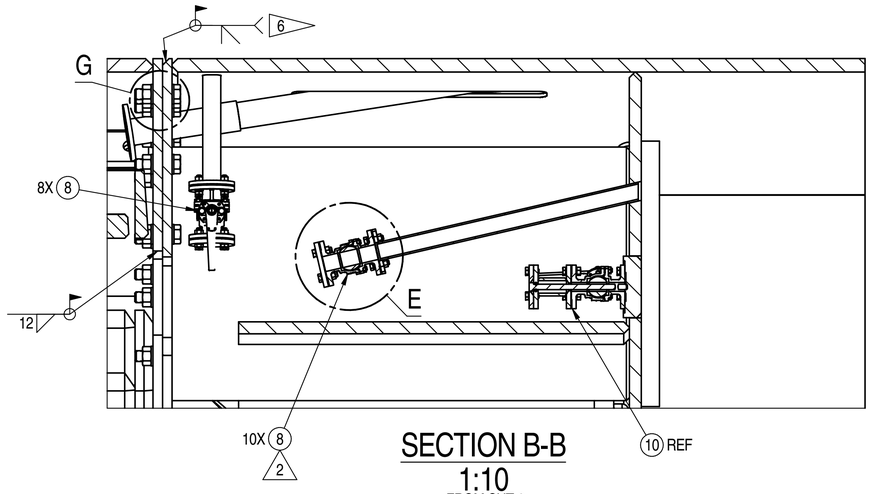

SECTION B-B
1:10
FROM SHT 2

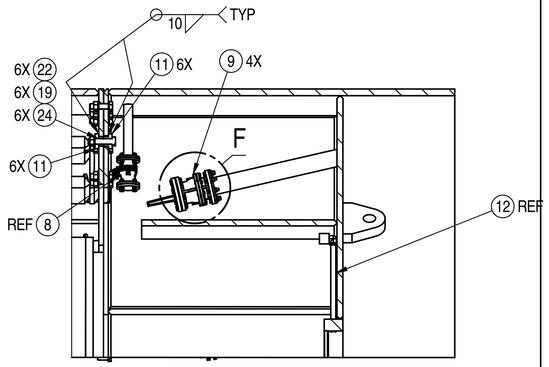

SECTION C-C
1:20
FROM SHT 2

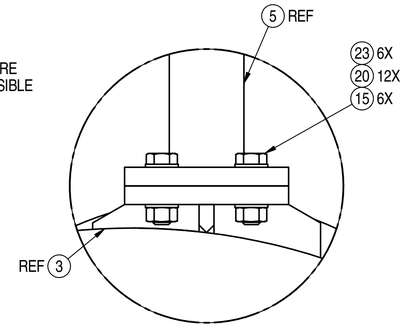

DETAIL D
1:4
FROM SHT 2

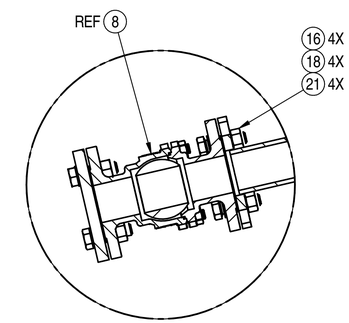

DETAIL E
1:4
TYP 18 PLACES 2

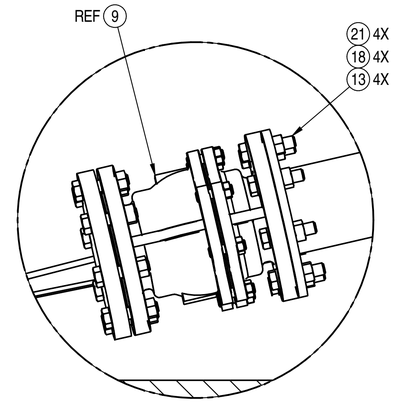

DETAIL F
1:4
TYP 4 PLACES

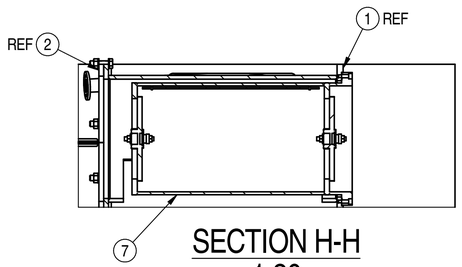

SECTION H-H
1:20
FROM SHT 2

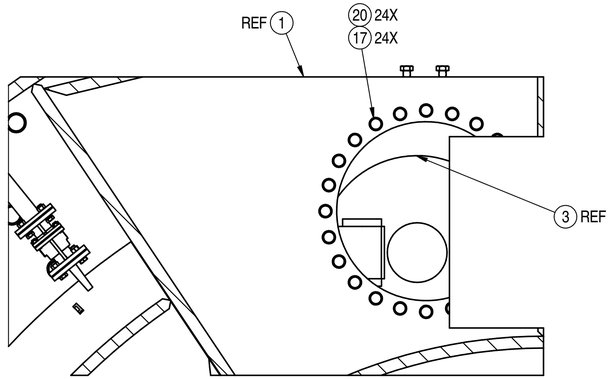

SECTION J-J
1:10

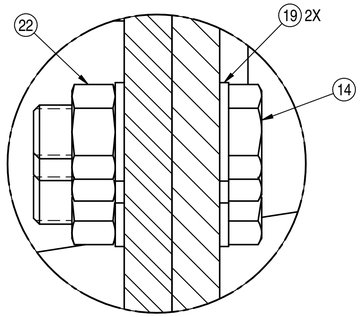

DETAIL G
1:2
TYP 108 PLACES

1002832

REV	DESCRIPTION	REV'D BY/ DATE	APP'D BY/ DATE
2	REVISED SECT B-B ADDED QTY TO CALLOUT REVISED QTY UNDER DETAIL E	JDS 8/22/12	JH 8/29/12

MACHINE	NEXT ASSY
EPB2016-376/	1002830
377	

UNLESS NOTED ALL DIMS ARE mm

TOLERANCES UNLESS NOTED

0-300	±1.5	X	±1.5
300-1500	±3	X.X	±1.0
1500-6000	±6	X.XX	±.40
6000+	±12	X.XXX	±.100
		ANGLES	±1°
		SURFACE FINISH	125

THIRD ANGLE PROJECTION

DIMENSIONS (X) ARE REF

ALL GEOMETRIC DIMENSIONING & TOLERANCING PER ANSI Y14.5-2009

PROPRIETARY NOTICE

The information disclosed herein is the sole property of The Robbins Company, and remains the sole property. It shall not be duplicated in full or part, used by or disclosed to any other party without prior written consent of The Robbins Company. By accepting this information, recipient agrees to abide in total with the notice, without any modification whatsoever to the conditions. This material is on loan only, and is to be returned upon request to The Robbins Company.

TITLE

FWD SHIELD ASSEMBLY

SIZE	DWG No.	REV	SHT	SCALE
D	1002832	2	3 OF 3	SEE DETAIL

DO NOT SCALE

DRAWN BY R.FINE	CHECKED STANDARDS J.HEINEMAN
DATE 02/27/2012	CHECKED DESIGN J.HEINEMAN
WEIGHT TOTAL 78661.6 kg	APPROVED BY J.HEINEMAN
	DATE 02/27/2012

Robbins

www.TheRobbinsCompany.com

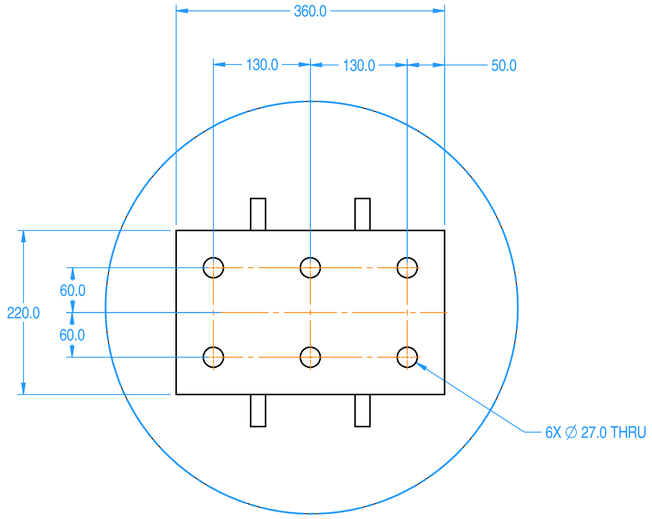

DETAIL A
1:4
TYP 2 PLACES

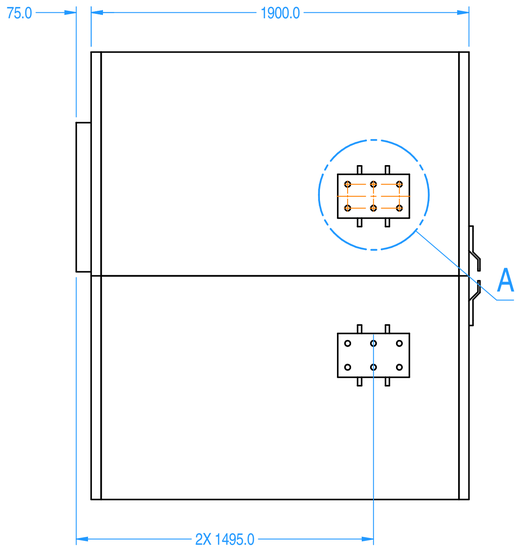

NOTES:

1. TWO CHAMBER MANLOCK
   CAPACITY: 3 + 3 PERSON
2. OPERATING PRESSURE: 4 BAR
3. VENDOR TO SUPPLY CONTROL BOX, WITH ALL CONTROL POWER DEVELOPED INTERNALLY. ELECTRICAL POWER FEED WILL BE 480VAC, 60 HZ, 3 PHASE.
4. SYSTEM TO BE DESIGNED & MANUFACTURED ACCORDING TO EN12110, ASME PVHO, CA OSHA.
5. VENDOR TO SUPPLY ALL NECESSARY TOOLS, VALVES, REGULATORS, TELEPHONES, CAMERAS, LIGHTS, AND INSTALLATION INSTRUCTIONS FOR SAFE OPERATION.
6. EQUIVALENT ALTERNATE DESIGNS PERMITTED WITH ROBBINS APPROVAL.
7. VENDOR TO SUPPLY COMPLETE OPERATION AND MAINTENANCE MANUAL IN ELECTRONIC FORMAT, WITH DETAILED ASSEMBLY DRAWINGS CONTAINING: MATERIALS, WELD CONFIGURATIONS, WEIGHTS, PACKING & SPARE PARTS LIST.
8. PIPING DRAWING MUST BE APPROVED BY ROBBINS ENGINEERING PRIOR TO MANUFACTURE.
1. 9. ELECTRICAL SYSTEM MUST COMPLY WITH CLASS 1 DIV 2 REQUIREMENTS.

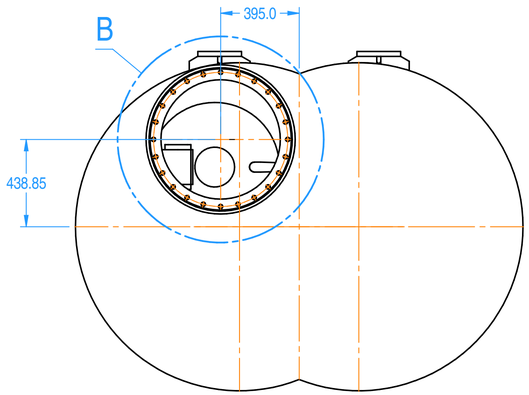

FRONT VIEW
1:15

TRC P/N 1036362
MANLOCK, 3 + 3 CAPACITY
1:15

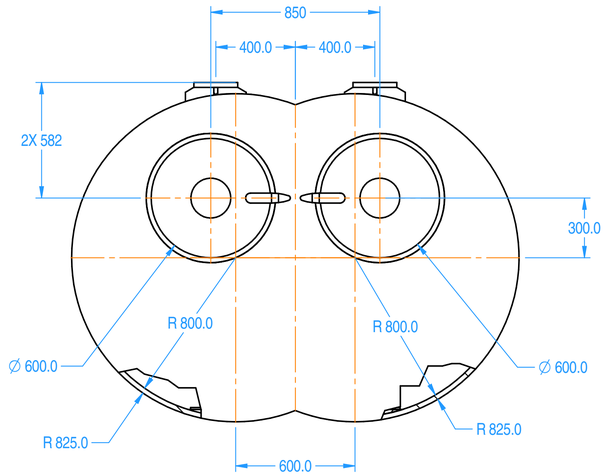

REAR VIEW
1:15

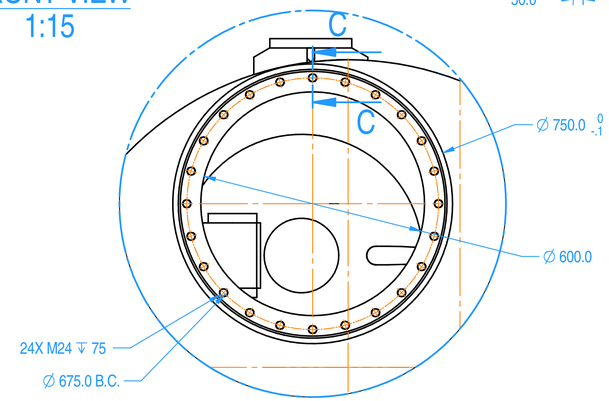

DETAIL B
1:8

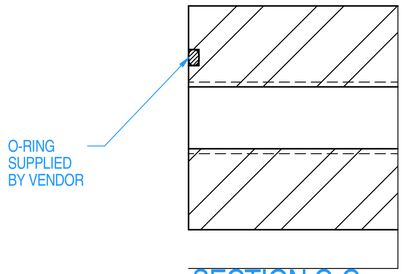

SECTION C-C
1:1

REV	DESCRIPTION	BY	DATE	APP'D BY DATE
1	ADDED NOTE 9	RF	3/14/12	

PROPRIETARY NOTICE
The information disclosed herein, is the sole property of The Robbins Company and is not to be published in whole or part, used for, or disclosed to any other person or corporation without the written permission of the Company. By accepting this information, recipient agrees to use the information for the purpose specified by the Company and to return it upon request and to afford it the degree of care necessary to keep it confidential. This material is on loan only, and remains the property of The Robbins Company.

MACHINE	NEXT ASSY
EPB2016-376'	1002832
377	

UNLESS NOTED ALL DIMS ARE mm
TOLERANCES UNLESS NOTED

0-300	±1.0	X	±1.0
300-1500	±3	X.X	±1.0
1500-6000	±6	X.XX	±.40
6000+	±12	X.XXX	±.100
		ANGLES	±1°
		SURFACE FINISH	

DIMENSIONS (X) ARE REF.
ALL GEOMETRIC DIMENSIONING & TOLERANCING PER ANSI Y14.5-2009

TITLE: MANLOCK, 3 + 3 CAPACITY

SIZE	DWG No.	REV	SHT 1 OF 1	SCALE
D	1036362	1		SEE DETAIL

DO NOT SCALE

DRAWN BY	CHECKED STANDARDS
R.FINE	J.HEINEMAN
DATE	CHECKED DESIGN
02/16/2012	J.HEINEMAN
WEIGHT TOTAL	APPROVED BY
8974.4 kg	J.HEINEMAN
	DATE 03/01/2012

Robbins
www.TheRobbinsCompany.com

1036362

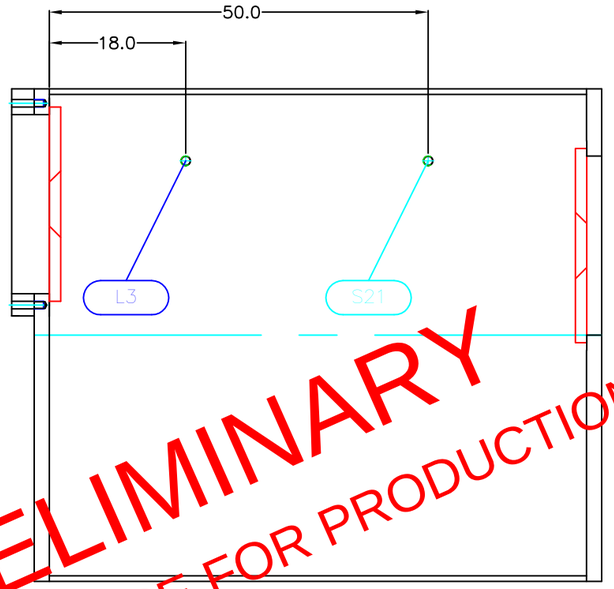

SECTION C–C

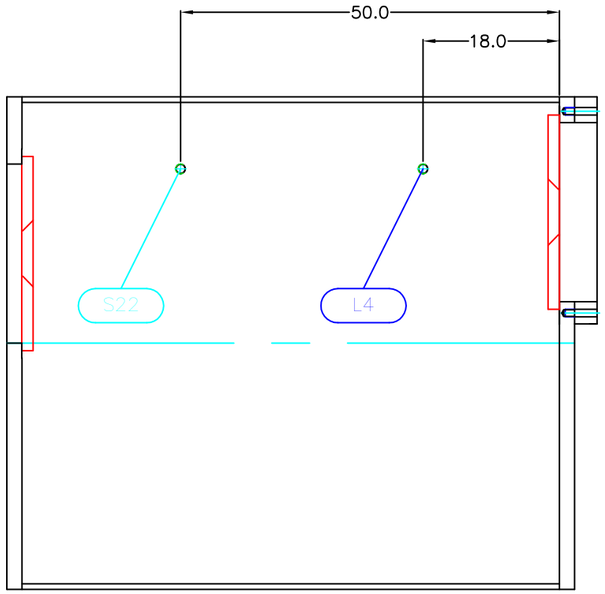

SECTION D–D

NOTES:

1. FFC INDICATES (FLUSHED) FULL COUPLING, SEE BELOW FOR DETAIL. THEY ARE SA182 F316 AND SHALL BE RATED FOR A MINIMUM OF 3000 #.
2. THE COUPLINGS PENETRATE ON A RADIAL CENTERLINE.

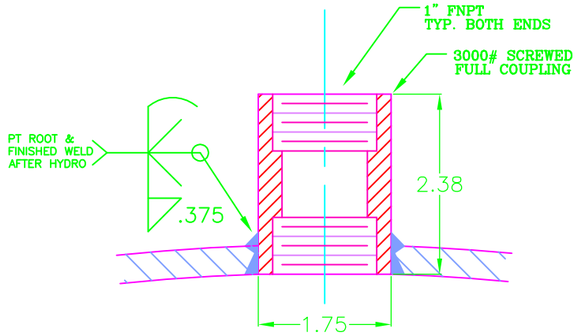

FFC DETAIL

PRELIMINARY
DO NOT USE FOR PRODUCTION

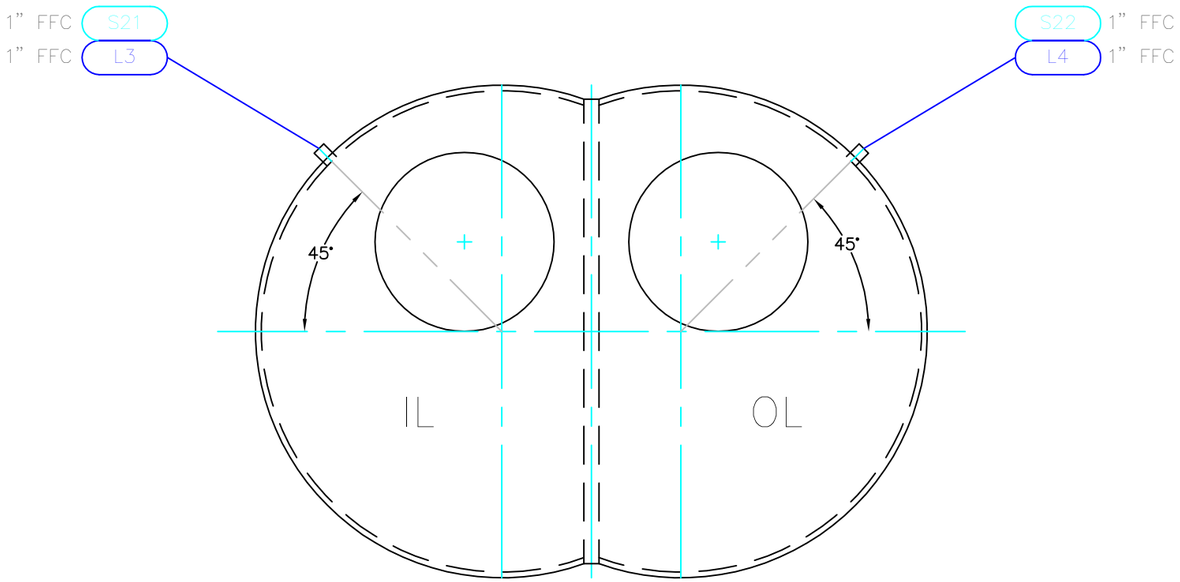

ELEVATION A–A

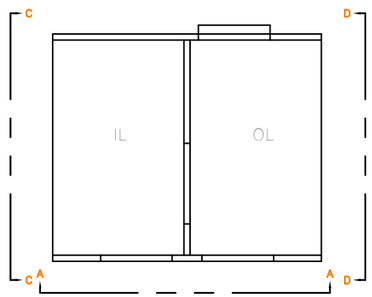

TOP VIEW

Unless Otherwise Specified Tolerances:
x.x = ± 0.05
x.xx = ± 0.01
x.xxx = ± 0.005
Angles ± .0°30'
Fractions ± 1/8

PROJECT NO:	2045	
DESIGNED BY		
DRAWN BY	J. MILLER	07/03/12
CHECKED BY		

REVISIONS

REV	DATE	BY	DESCRIPTION

REIMERS SYSTEMS, INC.
8210 Cinder Bed Road
Lorton, VA 22079 USA
TOLL FREE: 877-REIMERS
LOCAL: 703-952-0240
FAX: 703-952-0244
Info@ReimersSystems.com
www.ReimersSystems.com

--PROPRIETARY STATEMENT--
EXCEPT AS MAY BE OTHERWISE PROVIDED BY CONTRACT, THESE DRAWINGS, SPECIFICATIONS, AND OTHER RELATED INFORMATION ARE THE PROPERTY OF REIMERS SYSTEMS, INC., AND SHALL NOT BE REPRODUCED, COPIED, OR USED AS THE BASIS FOR THE MANUFACTURE OR SALE OF AN APPARATUS WITHOUT THE EXPRESSLY WRITTEN PERMISSION OF REIMERS SYSTEMS, INC.

PROJECT:			
Binocular Chamber			
DWG TITLE: PENETRATORS			REV 0
FILE NAME: 2045-812 Penetrators.dwg	SCALE: NONE	DRAWING NO.: 812-3	SHEET NO.: 3 OF 3

7/10/2012 2:21:05 PM

PRELIMINARY

DO NOT USE FOR PRODUCTION

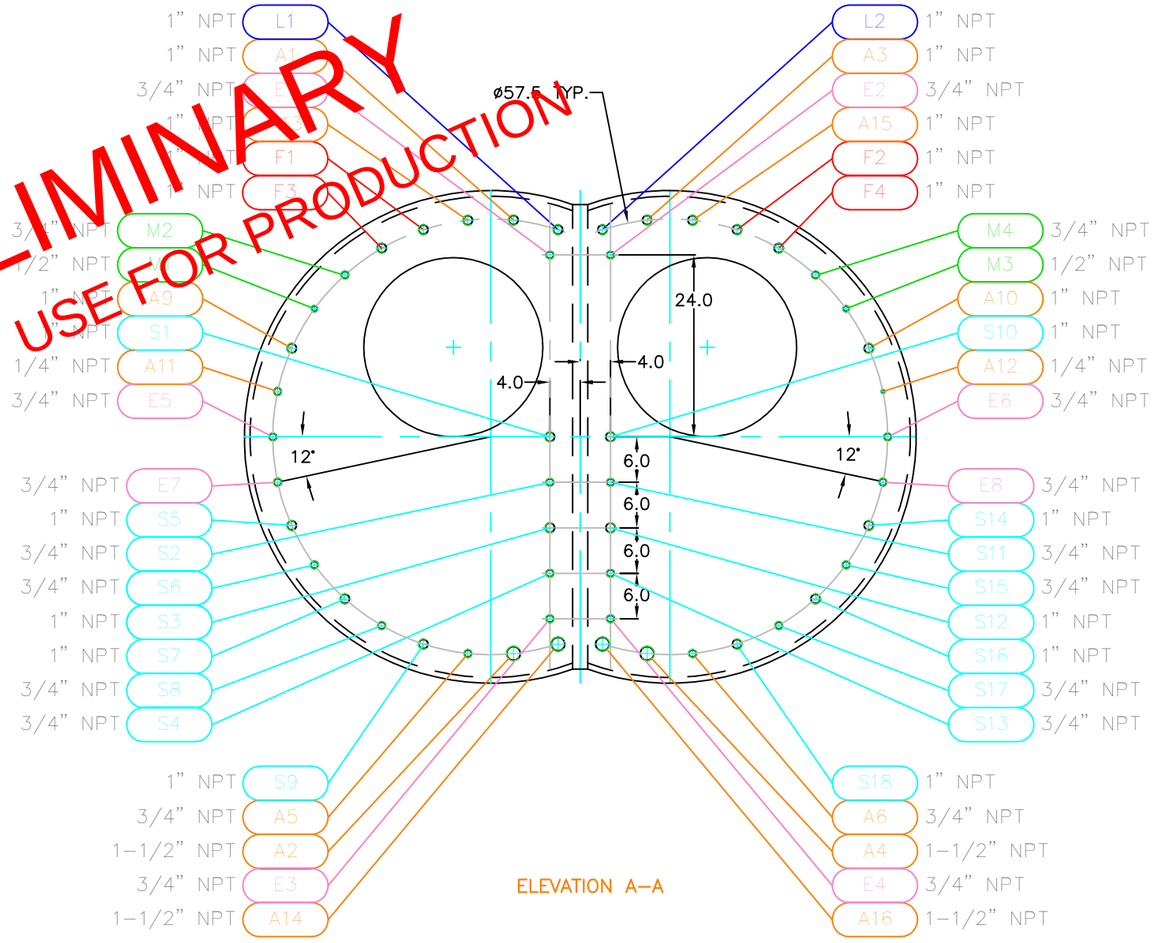

ELEVATION A–A

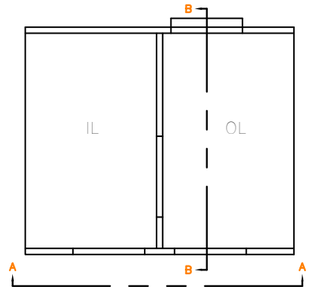

TOP VIEW

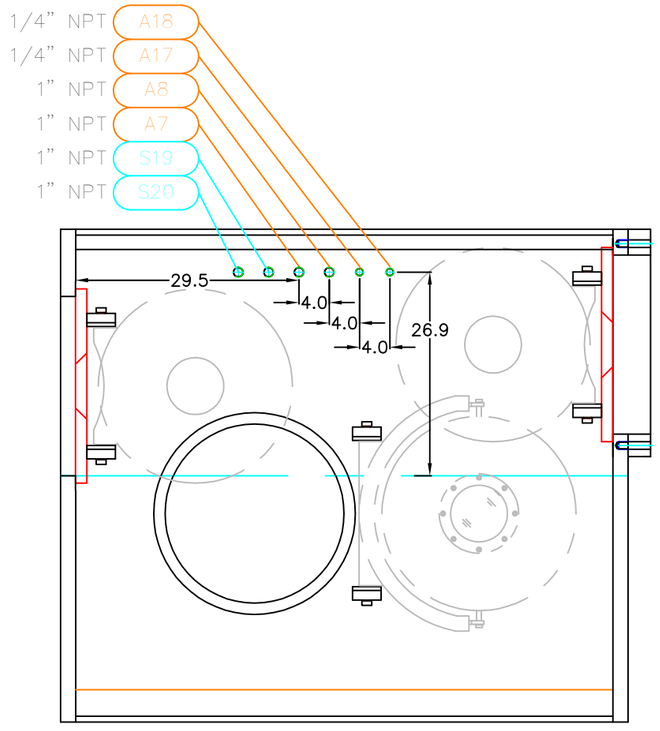

SECTION B–B

NOTE:

1. ALL HOLES ARE DRILLED THRU AND TAPPED FROM BOTH SIDES OF THE PLATE. THE SIZE AND TYPE OF THREAD IS SHOWN NEXT TO THE PENETRATOR CALLOUTS.
2. THE HOLES ON THE ø57.5 LINES ARE SPACED 12° APART AS SHOWN.

Unless Otherwise Specified
Tolerances:
x.x = ± 0.05
x.xx = ± 0.01
x.xxx = ± 0.005
Angles ± .0°30'
Fractions ± 1/8

PROJECT NO:	2045	
DESIGNED BY		
DRAWN BY	J. MILLER	07/03/12
CHECKED BY	R. DIXIT	06/07/12

REVISIONS

REV	DATE	BY	DESCRIPTION

REIMERS SYSTEMS, INC.

8210 Cinder Bed Road
Lorton, VA 22079 USA
TOLL FREE: 877-REIMERS
LOCAL: 703-952-0240
FAX: 703-952-0244
Info@ReimersSystems.com
www.ReimersSystems.com

--PROPRIETARY STATEMENT--

EXCEPT AS MAY BE OTHERWISE PROVIDED BY CONTRACT, THESE DRAWINGS, SPECIFICATIONS, AND OTHER RELATED INFORMATION ARE THE PROPERTY OF REIMERS SYSTEMS, INC, AND SHALL NOT BE REPRODUCED, COPIED, OR USED AS THE BASIS FOR THE MANUFACTURE OR SALE OF AN APPARATUS WITHOUT THE EXPRESSLY WRITTEN PERMISSION OF REIMERS SYSTEMS, INC.

PROJECT: ***Binocular Chamber***

DWG TITLE: PENETRATORS

FILE NAME: 2045-812 Penetrators.dwg

SCALE: NONE

DRAWING NO.: 812-2

SHEET NO.: 2 OF 3

REV: **0**

7/10/2012 2:20:34 PM

NOTES:

1. ALL DIMS IN MM [INCH]
2. SEE DWG 800-2 FOR VESSEL DESIGN SPECIFICATIONS
3. FINISH (EXCEPT MACHINED & SS PARTS) CLEANED, SAND BLASTED FOLLOWED BY 2 to 3 LAYERS OF SHERWIN WILLIAM ACROLON 218, HIGH SOLIDS, ACRYLIC POLYURETHANE, GLOSS SERIES, PURE WHITE PAINT. FINISHED SURFACE TO BE FREE OF ANY SIGNIFICANT DENTS. DO NOT PAINT HINGE PINS, BOLTS, BEARINGS OR ANY OTHER MOVING PARTS. CALL REIMERS SYSTEMS, INC. AT 703-952-0240 IF HAVE ANY QUESTIONS.
4. PROVIDE IMPACT TEST DATA FOR ITEMS EXCEPT ITEM 9: PER REQUIREMENTS OF SECTION 1-6 OF PVHO-1-2012 (MINIMUM 15 FT.LB OR BETTER AT 0 DEG. F).

MATERIAL SPECIFICATION

ITEM	QTY	DESCRIPTION	MATERIAL SPEC
–	TBD	EXTERIOR LUGS– SEE DWG 831–1	SA 516 GR.70
–	TBD	INTERIOR LUGS– SEE DWG 831–2	SA 516 GR.70
–	TBD	PENETRATIONS (12" OR SMALLER), SEE DWG 812	SA–182 F316
10	1	NAME PLATE, SEE DWG 800–2	SA 516 GR.70
9	2	ATTACHMENT PLATE	SA 516 GR.70
8	2	INTERIOR DOOR, SEE DWG 821–1	SA 516 GR.70
7	1	FRONT DOOR, SEE DWG 820–1	SA 516 GR.70
6	2	REAR DOOR, SEE DWG 820–2	SA 516 GR.70
5	1	INTERIOR MANWAY, SEE DWG 821–4	SA–350 LF2
4	1	FRONT MANWAY, SEE DWG 820–4	SA–350 LF2
3	1	BULKHEAD: 50.8 [2] THK, 1800 [71] LG, 1556 [61.3] HIGH	SA 516 GR.70
2	2	FLATHEADS: 50.8 [2] THK, 2250 [88.65] LG, 1650 [65] HIGH	SA 516 GR.70
1	2	CYLINDRICAL SHELL: OD 1650 [65], MIN 19 [.75] THK, 1800 [71] LG	SA 516 GR.70 (N)

(N) = NORMALIZED

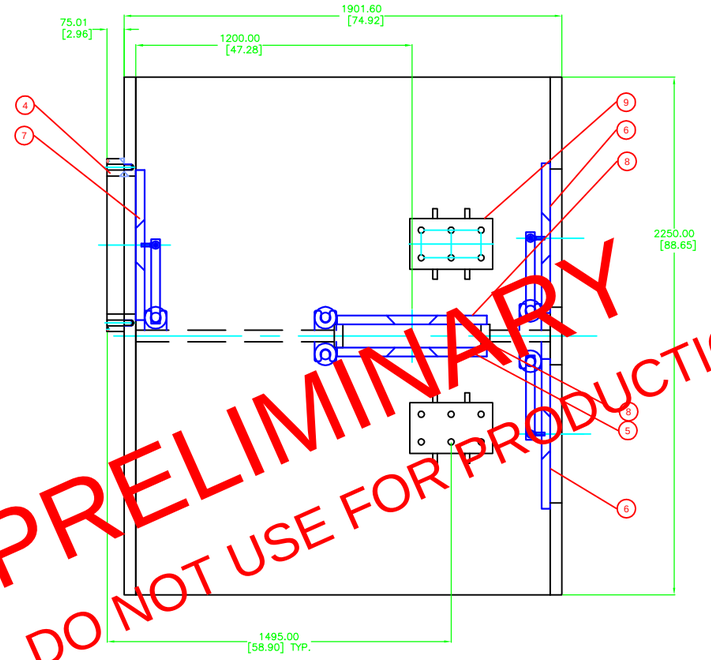

TOP VIEW

PRELIMINARY
DO NOT USE FOR PRODUCTION

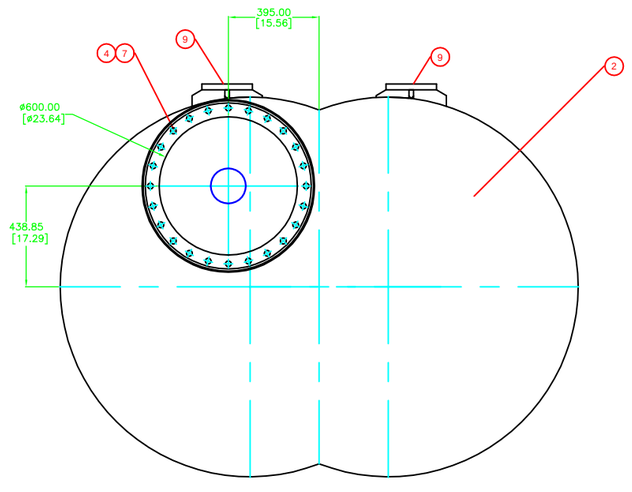

FRONT VIEW

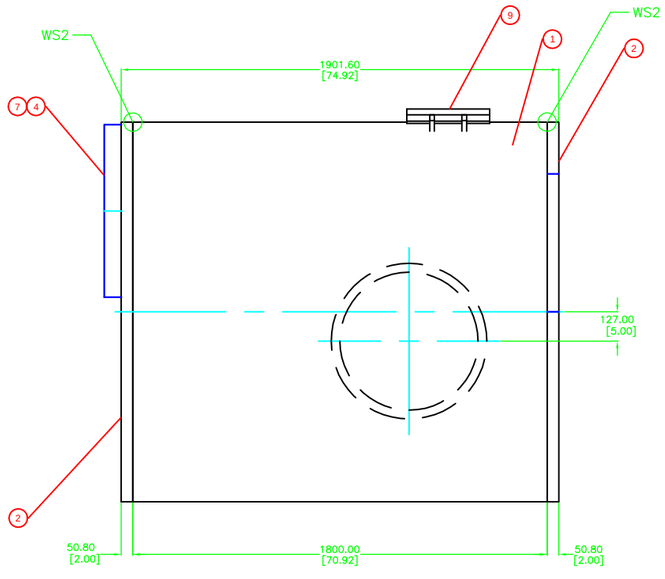

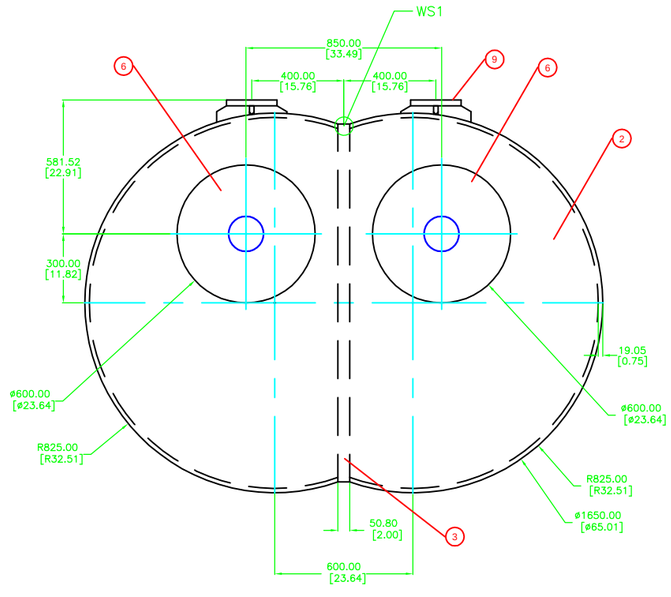

REAR VIEW

DESIGN SPECIFICATION

CODE/GUIDELINE ASME SEC–VIII, DIV. 1, 2010 EDITION, 2011 ADDENDUM, PVHO–1–2012						
U–STAMP:						YES
US NATIONAL BOARD REGISTRATION REQUIRED:						YES
NO. REQUIRED: (ONE)	VOLUME (scf):					91 (EACH LOCK)
SUBSTANCE CONTAINED IN VESSEL:						AIR
DESIGN CONDITION	INTERNAL	64	PSIG AT	126	°F	
	EXTERNAL	–	PSIG AT	–	°F	
OPERATING CONDITION	INTERNAL	58	PSIG AT	126	°F	
	EXTERNAL	–	PSIG AT	–	°F	
MINIMUM OPERATING TEMPERATURE:		–	–	50	°F	
MAXIMUM ALLOWABLE WORKING PRESSURE (MAWP):		58	PSI AT	126	°F	
POSTWELD HEAT TREATMENT (PWHT): YES	IMPACT TEST: YES					
HYDROSTATIC TEST PRESSURE:					83.2	PSIG
MINIMUM DESIGN METAL TEMPERATURE (MDMT):						50°F
MAXIMUM DESIGN METAL TEMPERATURE (MDMT):						126°F
SPECIAL SERVICE CONDITIONS:						NONE
CORROSION ALLOWANCE:						NONE
BASIC WIND SPEED:						–
EARTHQUAKE / SEISMIC FACTOR:						0.367
SEISMIC ZONE IDENTIFIER:						4

RADIOGRAPHIC EXAMINATION

COMPONENT	RADIOCRAPHIC	JOINT EFFICIENCY
SHELL	FULL	1.0
EXTERIOR HEADS	FULL	1.0
INTERIOR HEAD/BULKHEAD	FULL	1.0

Unless Otherwise Specified Tolerances:
x.x = ± 0.05
x.xx = ± 0.01
x.xxx = ± 0.005
Angles ± .0°30'

PROJECT NO:	2045	
DESIGNED BY		
DRAWN BY	J. MILLER	06/25/12
CHECKED BY	R. DIXIT	07/06/12

REVISIONS

REV	DATE	BY	DESCRIPTION

REIMERS SYSTEMS, INC.
8210 Cinder Bed Road
Lorton, VA 22079 USA
TOLL FREE: 877-REIMERS
LOCAL: 703-952-0240
FAX: 703-952-0244
Info@ReimersSystems.com
www.ReimersSystems.com

--PROPRIETARY STATEMENT--
EXCEPT AS MAY BE OTHERWISE PROVIDED BY CONTRACT, THESE DRAWINGS, SPECIFICATIONS, AND OTHER RELATED INFORMATION ARE THE PROPERTY OF REIMERS SYSTEMS, INC., AND SHALL NOT BE REPRODUCED, COPIED, OR USED AS THE BASIS FOR THE MANUFACTURE OR SALE OF AN APPARATUS WITHOUT THE EXPRESSLY WRITTEN PERMISSION OF REIMERS SYSTEMS, INC.

FILE NAME: 2045-800 PVHO General Arrangment.dwg

PROJECT: ***Binocular Chamber***

DWG TITLE: PVHO GENERAL ARRANGEMENT

SCALE	DRAWING NO.	SHEET NO.	REV
NONE	800-1	1 OF 1	0

7/10/2012 2:15:24 PM

BREATHING AIR CONTROL SYSTEM (BAS)
DESIGN DESCRIPTION

Introduction. This document is intended to present the basic design criteria and functional description of the components in the BAS Control System. Reference is made to the BAS Schematic which is part of the system documentation.

1. Injection Cleanout System.

1.1 **Purpose.** The BAS process and sensor lines must be dry and free of debris to protect control system components and ensure rated airflows and proper control of mixing chamber pressure. The Injection Cleanout System is to be used to blow accumulated debris and moisture out of the ports in the bulkhead at the mixing chamber prior use of the BAS in intervention procedures.

1.2 **Design Goals.** The primary goal is that the system should drive out all debris (short of particles that might be wedged) from the ports. The following design features are intended to accomplish this:

- The valves associated with each port should be closed coupled to one another and to the bulkhead port to minimize the volume to be flushed.
- Ports are flushed with water from the tunnel water system.
- After flushing, BAS air will be used to blow the ports dry. This is intended to preclude water and entrained dirt from flowing downhill (note that the bulkhead ports are located at an elevation above that of the BAS control components) in the lines into the BAS control components after the BAS process and sensing line valves are opened for operation.

2. Filtration System.

2.1 Inlet Filters. Air is filtered and conditioned to breathing air quality at the airplant site. However, filters are additionally provided at the inlet of the BAS controls to remove particulates that may be picked up in the long tunnel pipe run. There are filters (FIL-1 through FIL-4) provided for both pressurization lines. Associated valves (BV-1 to BV-10) allow in-service changing of filter elements as well as the ability to switch incoming redundant air lines between the primary and secondary pressurization control lines.

2.2 Ventilation Line Filters. These filters (FIL-7 and FIL-8) are provided to entrap particulates and moisture that might be entrained in the air flowing out of the mixing chamber to protect the control valve and flow sensing element.

2.3 Pressure Sense Line Filters. Filters FIL-5 and FIL-6 protect the control system pressure sensing elements from moisture that might flow downhill in the line from the mixing chamber.

2.4 Manlock Airline Filters. Filters FIL-9 and FIL-10 provide breathing quality fine particulate removal from the airstream leading the Manlocks.

3. **Ventilation Control and Sensing System.**

3.1 **Vent Control.** There are two identical exhaust lines labeled "Primary" and "Backup" on the schematic that can be used to control ventilation flow through the mixing chamber. In reality both lines can serve in either capacity. BV-28 and BV-29 are the control valves for these lines; they are sized and specified to control flow over the range of mixing chamber pressures and ventilation rates required of the BAS. Ventilation control is set after stable mixing chamber pressure is achieved by slowly opening the ventilation control valve until the desired ventilation rate is displayed on the vent rate display.

3.2 **Vent Rate Display.** Ventilation flow rate is sensed and indicated by insertion style mass flowmeter FM-4. The display reads out in standard cubic feet per minute (SCFM) of air and is sized and calibrated to exceed the required ventilation flow range.

4. **Pressure Control System.** The BAS control system is designed to control mixing chamber pressure at the conditions shown in the Table below. The pipes and components in the control system and up to the bulkhead are sized to accommodate the indicated flows. The hose connecting the control system to the tunnel pipe system is likewise sized and specified. There are two identical automatic pressure control circuits to comply with redundancy requirements. Each circuit consists of a flow control valve, pressure controller, pressure indicator, flowrate indicator, and control air supply.

Setpoint (barg)	Maximum Flow (scfm[1])	
4.0	1600	
3.0	2000	Customer specified condition
2.0	2100	

"Setpoint" is the desired pressure in the mixing chamber.

"Maximum Flow" is the continuous average flowrate that the BAS is expected to be able to supply to the mixing chamber to account for ventilation and tunnel leakage. The value is based on: the airplant operating between 105-120 psig and with sufficient compressor capacity to supply the air; the size of the control valve; and some margin for air used by the Manlock for ventilation. ***It should be noted that in an emergency, higher air volumes could be supplied to the mixing chamber by utilizing the second supply circuit, if permissible by local authorities and again, if sufficient compressor capacity were available.*** A method for doing this is outline below under "Manual Flow Control."

4.1 **Control Air.** Control air is supplied to the circuits by pressure regulators (PCV-1 and PCV-2) whose maximum output pressure is selected not to exceed the pressure specified for the controllers CP-1, CP-2. Relief valves RV-1, RV-2 provide required protection for the pressure control equipment.

4.2 **Flow Control Valve.** Control valves FCV-1, FCV-2 are globe style valves with equal percentage trim. They are outfitted with actuators and positioners to enable the degree of

control required by the application. The valves, under control of the pressure controllers, modulate the flow of air into the mixing chamber to maintain a desired pressure. The valves will fail closed on loss of signal. Manual bypasses BV-20, BV-21 are provided for additional system flexibility.

4.3 **Pressure Controller.** The BAS operator sets the desired mixing chamber pressure setpoint in single loop pneumatic pressure controller CP-1 or CP-2. The controller will compare the pressure sensed in the mixing chamber with this setpoint and, utilizing proportional plus reset functions, will modulate the opening of the control valve (i.e. the flow of air into the mixing chamber) in order to maintain mixing chamber pressure within close tolerance of the setpoint. Having air exhausted out of the mixing chamber via the ventilation control improves the performance of the pressure control by minimizing pressure overshoot tendency.

4.4 **Pressure Indicator.** The pressure controller has a gage showing the pressure setpoint. Accurate and easy to read gages (PI-3, PI-4) are provided to assist the operator in setting and viewing actual mixing chamber pressure.

4.5 **Flow Indicator.** The two process control lines are outfitted with inline style mass flowmeters to sense and display (in SCFM air) the amount of air flowing into the mixing chamber. This rate may be compared with the displayed ventilation flow rate (i.e. flow out of the mixing chamber) to obtain a rough figure for leakage from the mixing chamber.

4.6 **Manual Flow Control.** A BAS supply circuit may be operated in manual mode in the following manner:

- Adjust the circuit's pressure control setpoint to zero; this should cause the control valve to stay closed. ***Do not operate both supply circuits in automatic mode simultaneously, since they will tend to "fight" one another with consequent unpredictable control results.***
- Close one of the control valve's isolation valves.
- Use the control valve's bypass valve to control flow to the mixing chamber; flow rate will be indicated on the circuit's flowmeter.
- Remember to return the system to its normal state after this procedure is completed.

5. Gas Analysis. Mixing chamber air can be monitored at the BAS control location. Samples are taken from pressurized locations in the ventilation lines – i.e. upstream from the ventilation control valves (BV-28 and BV-29). The sample point location and short sample line runs will ensure low dwell time between sampled gas leaving the mixing chamber and reaching the analyzer.

Valves BV-47 and BV-48 allow the sample to be selected from the active ventilation line. Flowmeter FM-1 allows adjustment and indication of sample flow to the gas monitor. A hose barb (for ¼" ID tubing) accommodates the portable gas monitors used in the tunnel project.

6. Tunnel Pipe Sizing. The long pipe runs in the tunnel necessitate larger diameter pipe for the specified flow rate than the relatively short lengths of pipe in the BAS control system. In order for the control system to adequately control pressure over the specified range of flow

and pressure conditions in the mixing chamber, the system pressure drop (from airplant accumulator to mixing chamber) must be predominantly across the control valve. This means that pressure drop in the tunnel pipe must be constrained to a reasonable value, especially when combined with airplant pressure cycling.

Based on these factors, ***we recommend that the tunnel pipe be 6" nominal size in order for the BAS control system to function as required.***

7. **Airplant Sizing in Relation to BAS Control.** As of this writing, we understand that BAS air will be supplied by two Kaeser DSD-150 air compressors. We note from the Manufacturer's data that the output of one of these units is about 670 "cfm" at the likely system operating pressure range (111-125 psig). This "cfm" term is defined in the compressor industry in terms of the air that is taken *into the compressor at its intake*. The term "icfm" or intake cfm is also used in this respect. The air at the compressor intake generally has passed through some intake piping and air filter with a consequent small loss of pressure; i.e. the pressure of the air *at* the compressor intake is generally below what is defined as standard atmospheric pressure. As a result, the standard mass flow *output* of the compressor in terms of scfm[1] mass units is somewhat less than the "cfm" rating in the manufacturer's literature.

In this case, each compressor will supply somewhat less than 670 scfm of air to the system. The combined compressor output is therefore about 2/3 of the capacity specified for the BAS control system described herein. ***If a scenario arises whereby the specified 2000 scfm is needed for an intervention, then additional compressor capacity will need to be added.***

[1]Note: A "standard cubic foot of air" is defined here as one cubic foot of air at these conditions: 14.696 psia, 60 ^{0}F (520 ^{0}R), 0% RH. This yields an air mass of roughly 0.076 pounds.

REV	DATE	BY	DESCRIPTION

NOTES:

1. This drawing illustrates the functional relationship of system components. It is not meant to show actual component physical location; refer to layout drawings for that information.
2. Size BV42 and BV-47 to depressurize IL and OL from 2 bar to 0 bar in 2 minutes.
3. To Gas Analysis System, Drawing 2045-34345.

PRELIMINARY

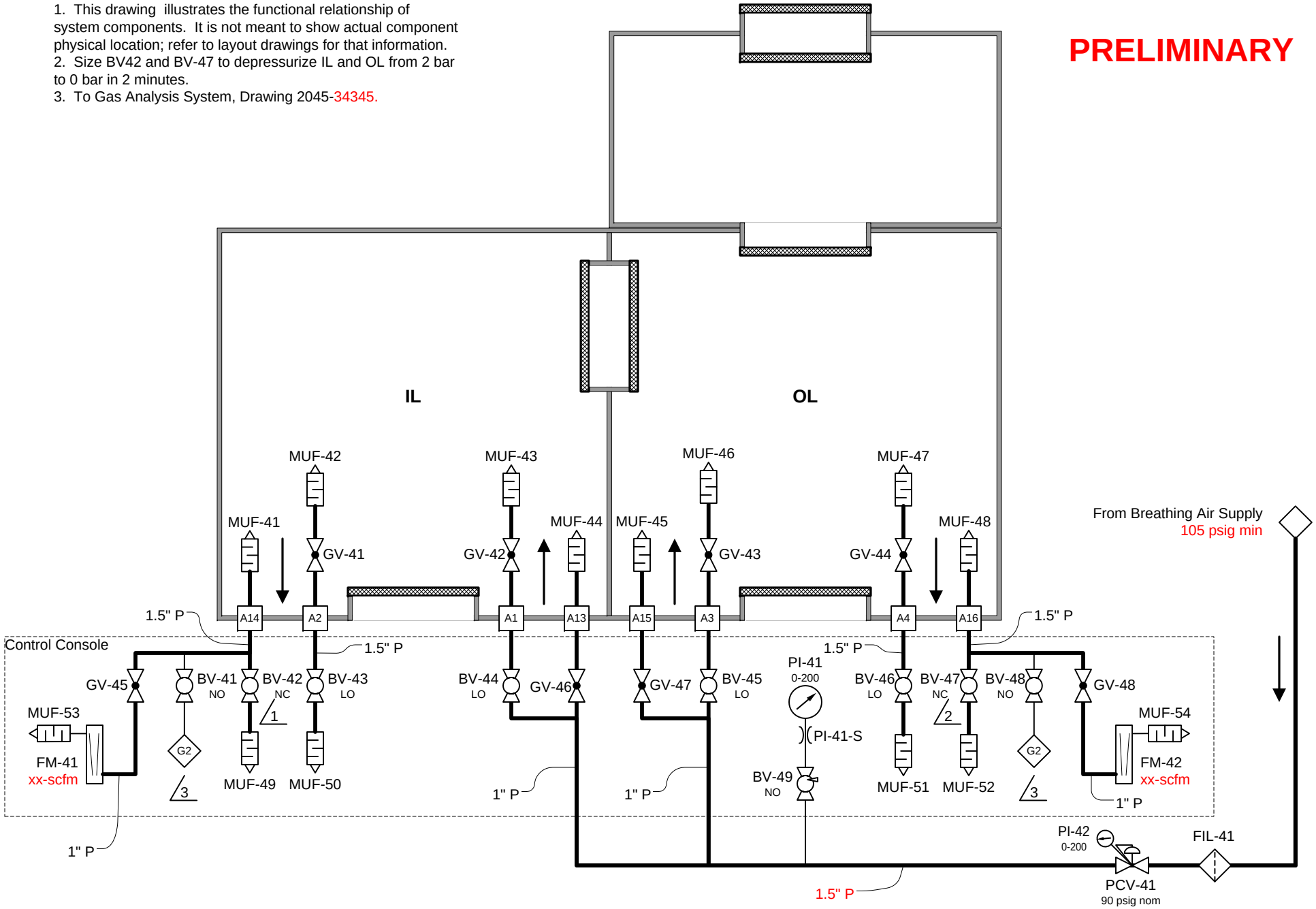

PROJECT NO.	2045	
FILENAME	PRESSURE CONTROL SCHEMATIC.VSD	
DESIGNED BY	L. Wischhoefer, PE	7/7/12
DRAWN BY	L. Wischhoefer	7/7/12
CHECKED BY		

Reimers Systems, Inc.
8210 Cinder Bed Rd.
Lorton, VA 22079 USA
Toll Free: 877-REIMERS
Local: 703-952-0240
www.ReimersSysterms.com

-PROPRIETARY STATEMENT-
EXCEPT AS MAY BE OTHERWISE PROVIDED BY CONTRACT, THESE DRAWINGS, SPECIFICATIONS, AND OTHER RELATED INFORMATION ARE THE PROPERTY OF REIMERS SYSTEMS, INC., AND SHALL NOT BE REPRODUCED, COPIED, OR USED AS THE BASIS FOR THE MANUFACTURE OR SALE OF AN APPARATUS WITHOUT THE EXPRESSLY WRITTEN PERMISSION OF REIMERS SYSTEMS, INC.

PROJECT	BINOCULAR CHAMBER
TITLE	PRESSURE CONTROL SCHEMATIC
SCALE	None
DWG NUMBER	2045-??
PAGE	1 OF 2

REV	DATE	BY	DESCRIPTION

NOTES:

1. This drawing illustrates the functional relationship of system components. It is not meant to show actual component physical location; refer to layout drawings for that information.
2. Route drain lines to acceptable water drain receptacle. Drain line inside chamber should be within 1/2" of BDC.

PRELIMINARY

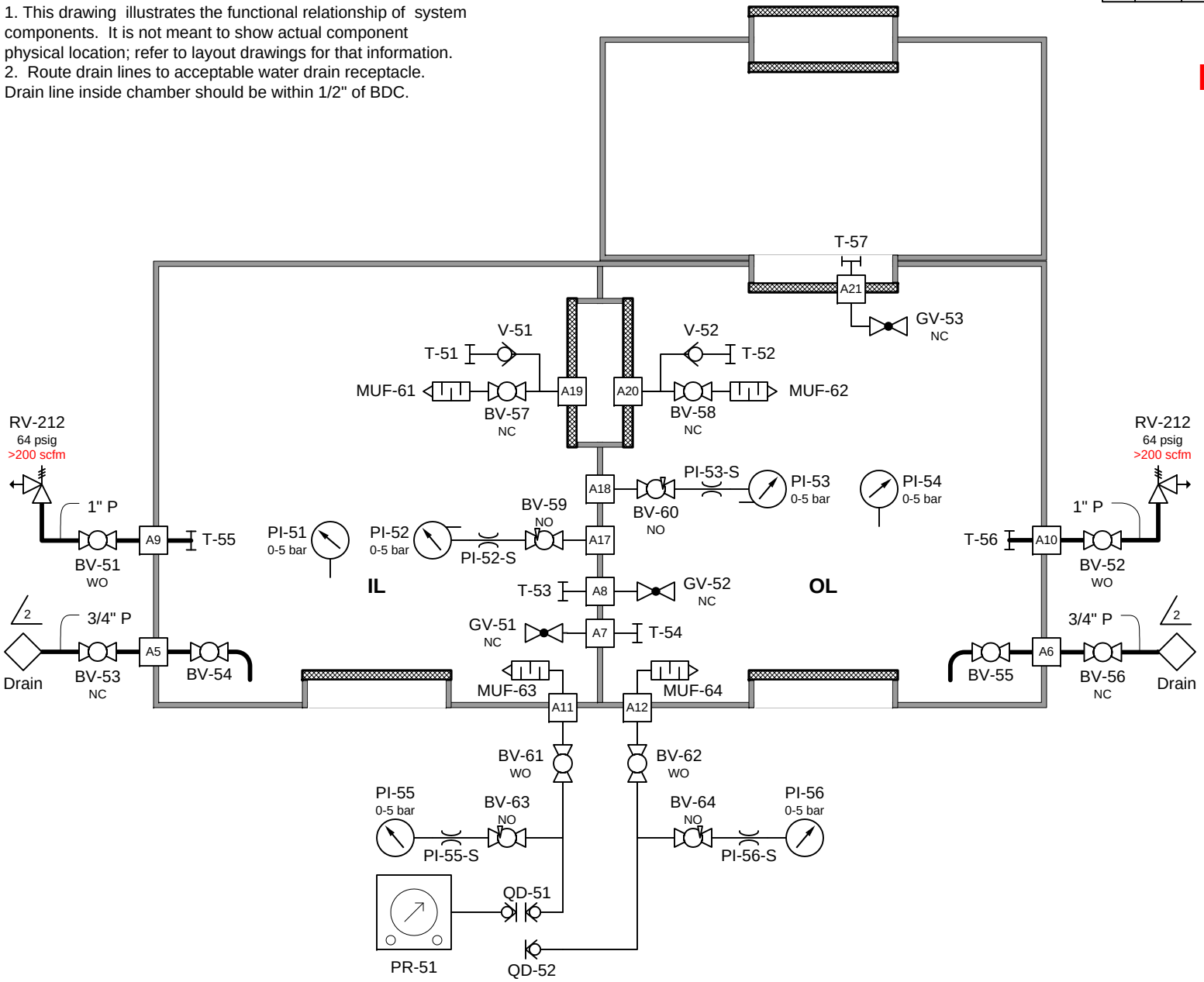

PROJECT NO.	2045	
FILENAME	PRESSURE CONTROL SCHEMATIC.VSD	
DESIGNED BY	L. Wischhoefer, PE	7/7/12
DRAWN BY	L. Wischhoefer	7/7/12
CHECKED BY		

Reimers Systems, Inc.
8210 Cinder Bed Rd.
Lorton, VA 22079 USA
Toll Free: 877-REIMERS
Local: 703-952-0240
www.ReimersSysterms.com

-PROPRIETARY STATEMENT-
EXCEPT AS MAY BE OTHERWISE PROVIDED BY CONTRACT, THESE DRAWINGS, SPECIFICATIONS, AND OTHER RELATED INFORMATION ARE THE PROPERTY OF REIMERS SYSTEMS, INC., AND SHALL NOT BE REPRODUCED, COPIED, OR USED AS THE BASIS FOR THE MANUFACTURE OR SALE OF AN APPARATUS WITHOUT THE EXPRESSLY WRITTEN PERMISSION OF REIMERS SYSTEMS, INC.

PROJECT	BINOCULAR CHAMBER
TITLE	PRESSURE CONTROL SCHEMATIC
SCALE	None
DWG NUMBER	2045-??
PAGE	2 OF 2

M7

REV	DATE	BY	DESCRIPTION

NOTES:

1. G1 and G2 continued on Drawing 2045-xxx Pressure Control Schematic, Sheet 1.

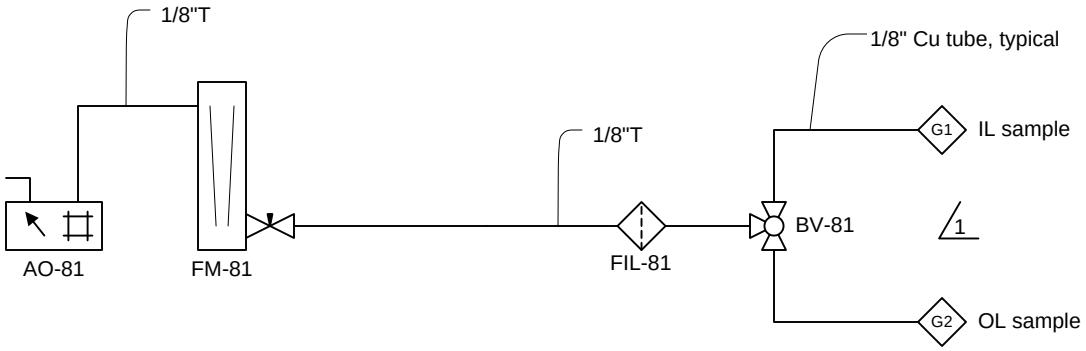

PRELIMINARY

PROJECT NO.		
FILENAME	GAS ANALYSIS.VSD	
DESIGNED BY	L. Wischhoefer, PE	7/7/12
DRAWN BY	L. Wischhoefer	7/7/12
CHECKED BY		

Reimers Systems, Inc.
8210 Cinder Bed Rd.
Lorton, VA 22079 USA
Toll Free: 877-REIMERS
Local: 703-952-0240
www.ReimersSysterms.com

-PROPRIETARY STATEMENT-
EXCEPT AS MAY BE OTHERWISE PROVIDED BY CONTRACT, THESE DRAWINGS, SPECIFICATIONS, AND OTHER RELATED INFORMATION ARE THE PROPERTY OF REIMERS SYSTEMS, INC., AND SHALL NOT BE REPRODUCED, COPIED, OR USED AS THE BASIS FOR THE MANUFACTURE OR SALE OF AN APPARATUS WITHOUT THE EXPRESSLY WRITTEN PERMISSION OF REIMERS SYSTEMS, INC.

PROJECT	BINOCULAR CHAMBER
TITLE	PIPING SCHEMATICS

SCALE	None
DWG NUMBER	2045-XXX
PAGE	1 OF 1

REV	DATE	BY	DESCRIPTION

NOTES:

1. This drawing illustrates the functional relationship of system components. It is not meant to show actual component physical location; refer to layout drawings for that information.
2. Water supply pressure at the chamber #@#%@#$
3 IL and OL are to have hand held fire extinguishers approved for hyperbaric use.
4. Number of spray nozzles TBD.

PRELIMINARY

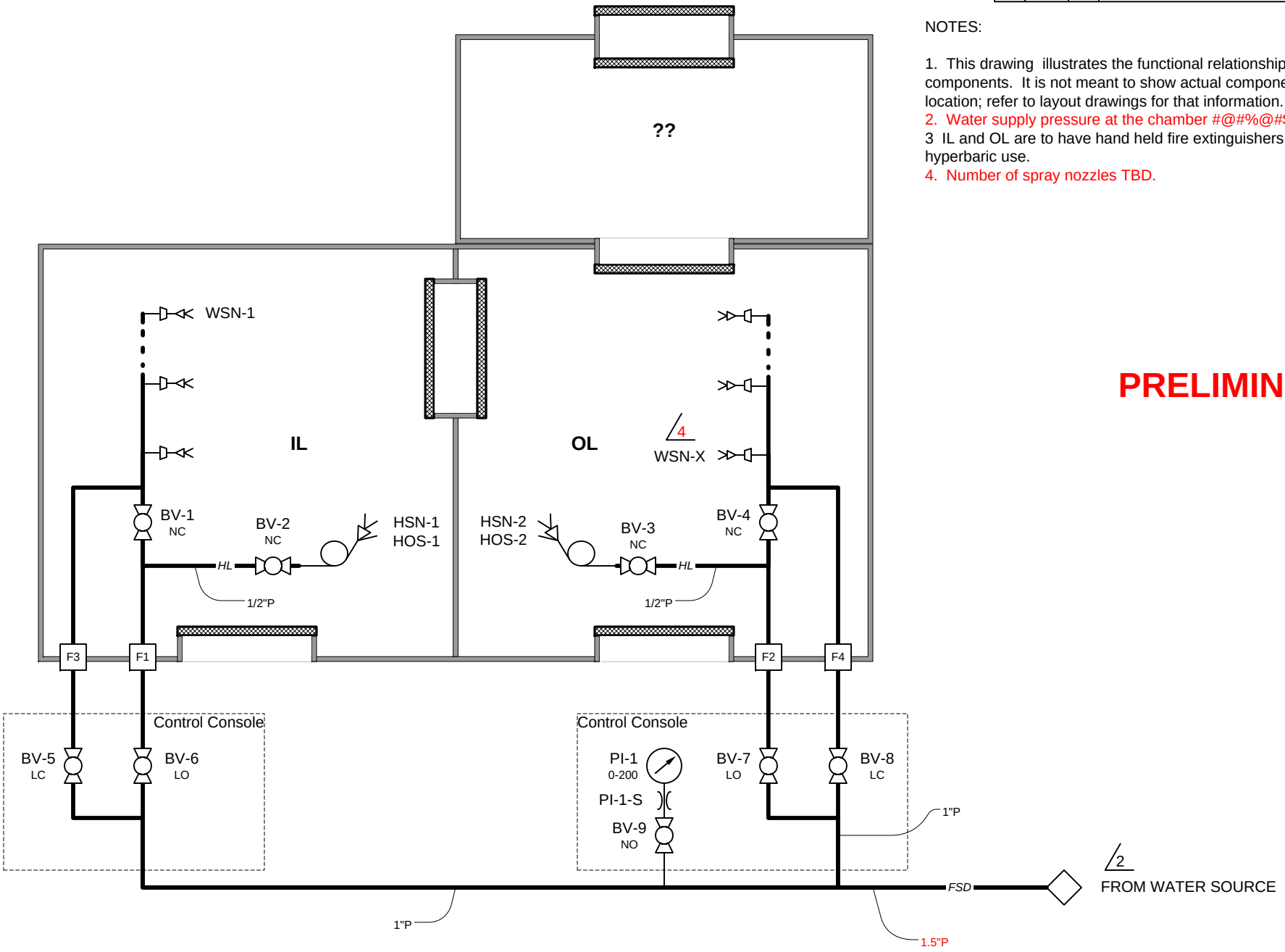

PROJECT NO.	2045	
FILENAME	FS PIPING SCHEMATIC.VSD	
DESIGNED BY	L. Wischhoefer, PE	7/5/12
DRAWN BY	L. Wischhoefer	7/5/12
CHECKED BY		

Reimers Systems, Inc.
8210 Cinder Bed Rd.
Lorton, VA 22079 USA
Toll Free: 877-REIMERS
Local: 703-952-0240
www.ReimersSysterms.com

-PROPRIETARY STATEMENT-
EXCEPT AS MAY BE OTHERWISE PROVIDED BY CONTRACT, THESE DRAWINGS, SPECIFICATIONS, AND OTHER RELATED INFORMATION ARE THE PROPERTY OF REIMERS SYSTEMS, INC., AND SHALL NOT BE REPRODUCED, COPIED, OR USED AS THE BASIS FOR THE MANUFACTURE OR SALE OF AN APPARATUS WITHOUT THE EXPRESSLY WRITTEN PERMISSION OF REIMERS SYSTEMS, INC.

PROJECT	BINOCULAR CHAMBER
TITLE	FIRE SUPPRESION SYSTEM SCHEMATIC

SCALE	None
DWG NUMBER	2045-??
PAGE	1 OF 1

REV	DATE	BY	DESCRIPTION

NOTES:

1. This drawing illustrates the functional relationship of system components. It is not meant to show actual component physical location; refer to layout drawings for that information.
2. Muffler location info per Cal Code $#%#^@#$
3. Gas analysis line continued on Drawing 2045-LJK
4. See sheet 2 Detail 1 for design of GS-21 and GS-22.

PRELIMINARY

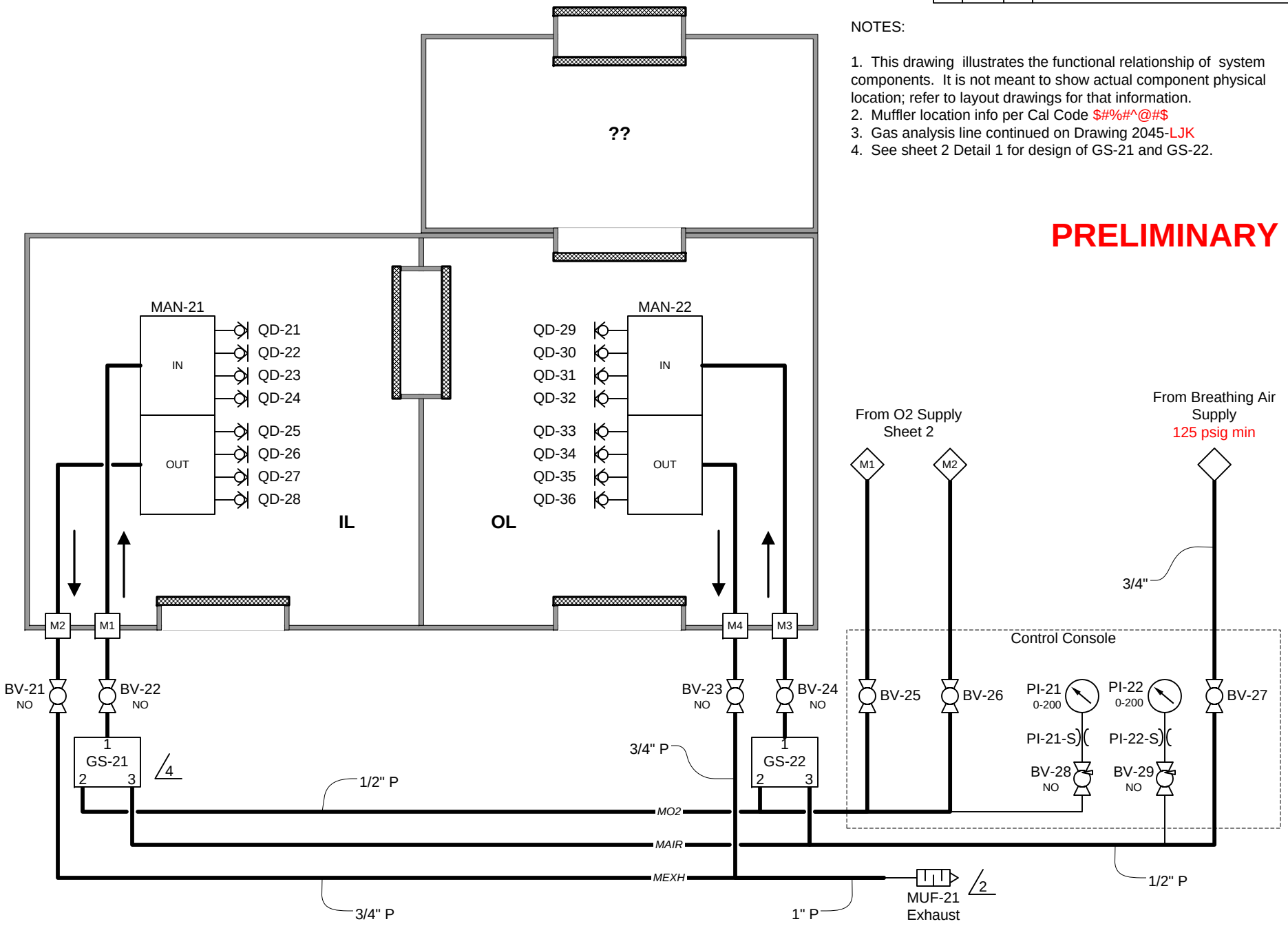

PROJECT NO.	2045	
FILENAME	BIBS PIPING SCHEMATIC.VSD	
DESIGNED BY	L. Wischhoefer, PE	7/6/12
DRAWN BY	L Wischhoefer	7/6/12
CHECKED BY		

Reimers Systems, Inc.
8210 Cinder Bed Rd.
Lorton, VA 22079 USA
Toll Free: 877-REIMERS
Local: 703-952-0240
www.ReimersSysterms.com

-PROPRIETARY STATEMENT-
EXCEPT AS MAY BE OTHERWISE PROVIDED BY CONTRACT, THESE DRAWINGS, SPECIFICATIONS, AND OTHER RELATED INFORMATION ARE THE PROPERTY OF REIMERS SYSTEMS, INC., AND SHALL NOT BE REPRODUCED, COPIED, OR USED AS THE BASIS FOR THE MANUFACTURE OR SALE OF AN APPARATUS WITHOUT THE EXPRESSLY WRITTEN PERMISSION OF REIMERS SYSTEMS, INC.

PROJECT	BINOCULAR CHAMBER
TITLE	BIBS SCHEMATIC
SCALE	None
DWG NUMBER	2045-??
PAGE	1 OF 2

REV	DATE	BY	DESCRIPTION

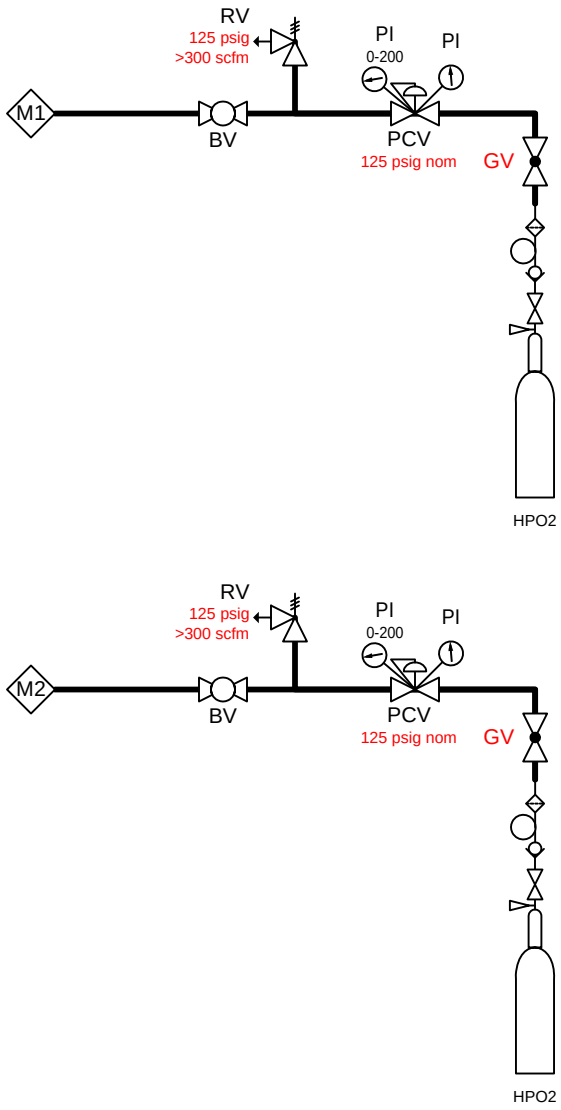

OXYGEN SUPPLY SYSTEM 1

NOTES:

1. Equipment shown in the Oxygen Supply System, including the hoses running to the Manlock Control Console (sheet 1) are supplied by others at the jobsite when needed.
2.

PRELIMINARY

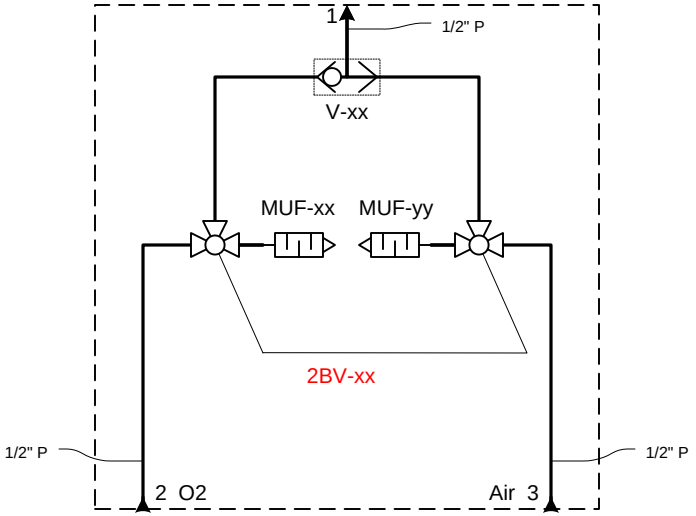

DETAIL 1 - BLOCK & BLEED VALVE ASSEMBLY

Table - Component Tag Designations

Sheet 1 Ref	2BV-xx	MUF-xx	MUF-yy	V-xx
GS-21	2BV-21	MUF-21	MUF-23	V-21
GS-22	2BV-22	MUF-22	MUF-24	V-22

PROJECT NO.	2045	
FILENAME	BIBS PIPING SCHEMATIC.VSD	
DESIGNED BY	L. Wischhoefer, PE	7/6/12
DRAWN BY	L Wischhoefer	7/6/12
CHECKED BY		

Reimers Systems, Inc.
8210 Cinder Bed Rd.
Lorton, VA 22079 USA
Toll Free: 877-REIMERS
Local: 703-952-0240
www.ReimersSysterms.com

-PROPRIETARY STATEMENT-
EXCEPT AS MAY BE OTHERWISE PROVIDED BY CONTRACT, THESE DRAWINGS, SPECIFICATIONS, AND OTHER RELATED INFORMATION ARE THE PROPERTY OF REIMERS SYSTEMS, INC., AND SHALL NOT BE REPRODUCED, COPIED, OR USED AS THE BASIS FOR THE MANUFACTURE OR SALE OF AN APPARATUS WITHOUT THE EXPRESSLY WRITTEN PERMISSION OF REIMERS SYSTEMS, INC.

PROJECT	BINOCULAR CHAMBER
TITLE	BIBS SCHEMATIC
SCALE	None
DWG NUMBER	2045-??
PAGE	2 OF 2

QTY	PART No.	DESCRIPTION	DWG No.	WT. Total	ITEM
24	A22153-60705	SHCS, M20x70mm G8.8	A22153	6.3 kg	1
24	A22157-6	WASHER, SM OD M20	A22157	0.2 kg	2
1	A111572-200990	O-RING, Ø.125" X 99" LG	A111572	0.0 kg	3*

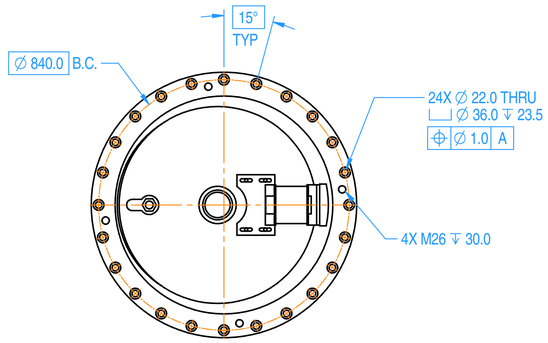

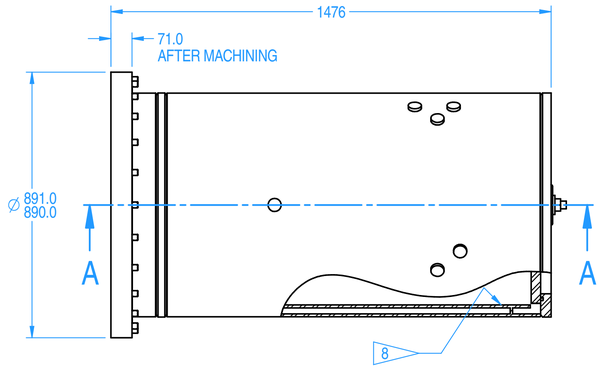

TRC P/N 1034772
MATERIAL LOCK
1:10

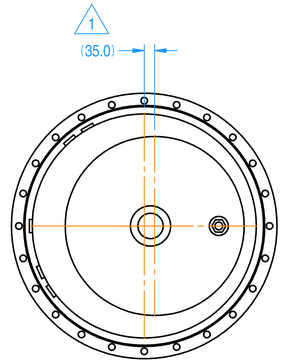

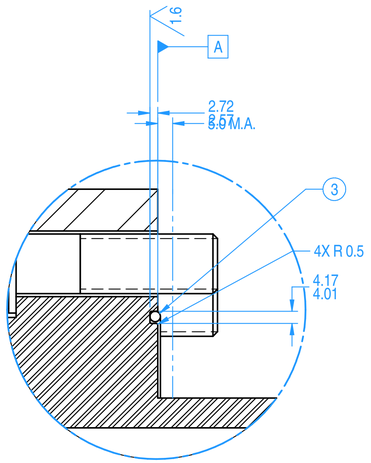

DETAIL B
1:1

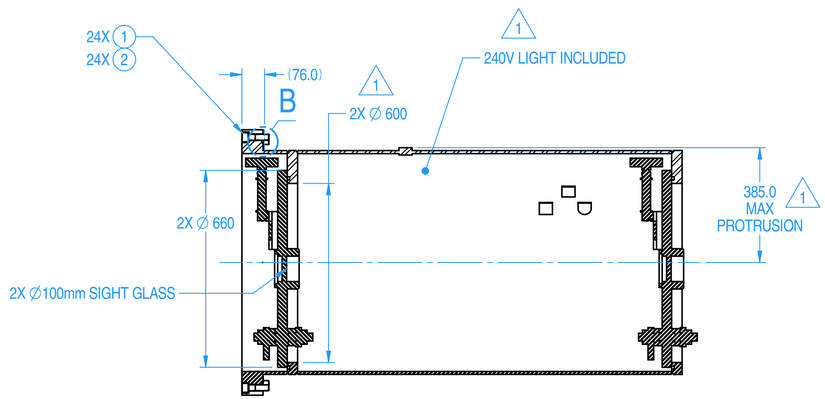

SECTION A-A
1:10

NOTES:

1. VENDOR TO SUPPLY DETAILED ASSEMBLY DRAWINGS CONTAINING: MATERIALS, WELD CONFIGURATIONS, WEIGHTS, PACKING & SPARE PARTS LIST.
2. ASME BOILER CODE COMPLIANT.
3. MATERIAL LOCK RATING: 4 BAR/43.5 PSI @ 0-52°C/32-126°F TEST PRESSURE MIN. 5.3 BAR/76.9 PSI
4. JOINT EFFICIENCY: 0.7
5. CORROSION ALLOWANCE: 1.0mm
6. APPLY MARINE GRADE COATING TO INTERIOR AND EXTERIOR.
7. EQUIVALENT ALTERNATE DESIGNS PERMITTED WITH ROBBINS APPROVAL.

1 8 SLIDING PLATFORM FOR MOVING CUTTERS. MUST BE ABLE TO APPLY 5mm WELDS TO THIS PLATE WITHOUT AFFECTING PRESSURE VESSEL INTEGRITY.

1034772

REV	DESCRIPTION	BY/ DATE
1	CHANGED DOORS TO OPP SIDE (180°) ADDED 5mm WELD NOTE TO NOTE 8 CHANGED LIGHTING NOTE, NOT 100V ADDED DIMENSIONS	SSD 1/24/12

PROPRIETARY NOTICE
The information disclosed hereon is the sole property of The Robbins Company, and remains their sole property. It shall not be duplicated in full or part, used by or disclosed to any other party without prior written consent of The Robbins Company. By accepting this information, recipient agrees to abide in total with this notice, without any modification whatsoever to the contents. This material is on loan only, and is to be returned upon request to The Robbins Company.

MACHINE	NEXT ASSY
EPB2111-366	1034731
EPB2111-367	

UNLESS NOTED ALL DIMS ARE mm

TOLERANCES UNLESS NOTED

FAB (mm)		MACHINING (mm)	
0-300	±1.5	X	±1.5
300-1500	±3	X.X	±1.0
1500-6000	±6	X.XX	±.40
6000+	±12	X.XXX	±.100
		ANGLES	±1°
		SURFACE FINISH	3.2

DIMENSIONS (X) ARE REF

ALL GEOMETRIC DIMENSIONING & TOLERANCING PER ANSI Y14.5M-1982 AS APPLICABLE.

TITLE: MATERIAL LOCK

SIZE: D | DWG No. 1034772 | REV 1 | SHT 1 OF 1 | SCALE: SEE DETAIL - DO NOT SCALE

Robbins

DRAWN: S.DOLGIKH DATE 09/22/2011
CHECKED: M.CHILDS DATE 09/23/2011
THIRD ANGLE PROJECTION
APPROVED: S.DRANEY DATE 09/27/2011
WEIGHT TOTAL: 714.5 kg

www.TheRobbinsCompany.com

B-B (1 : 5)

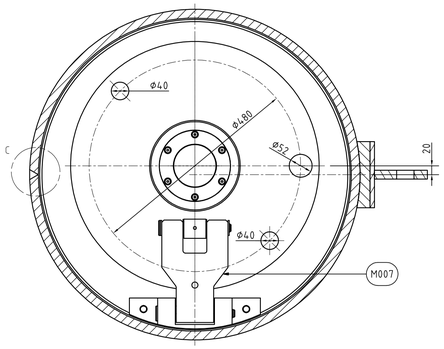

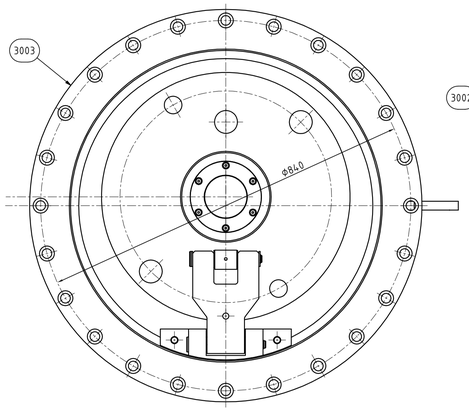

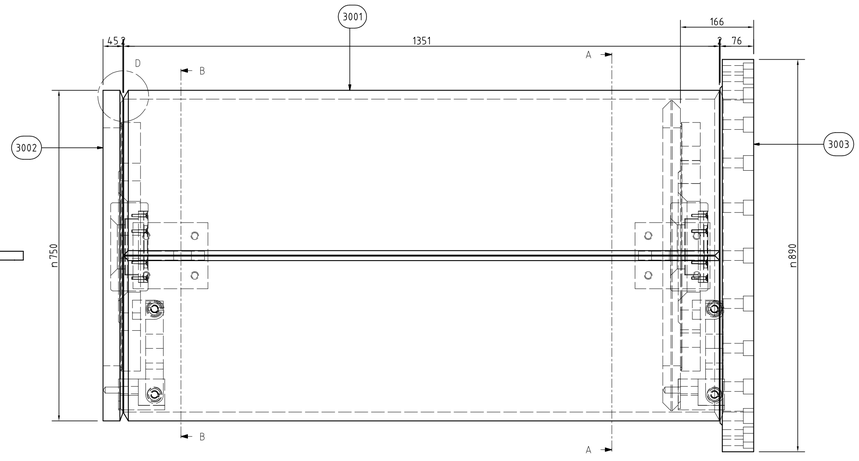

A-A (1 : 5)

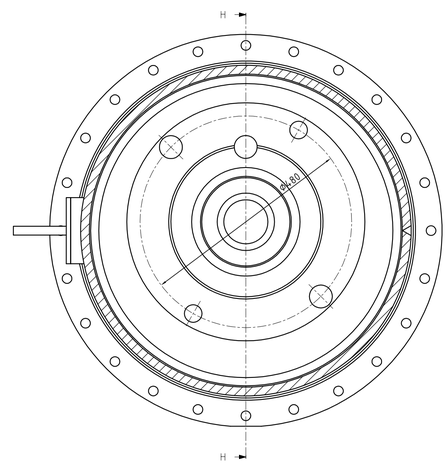

C (1 : 1)

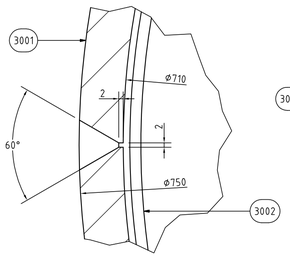

D (1 : 1)

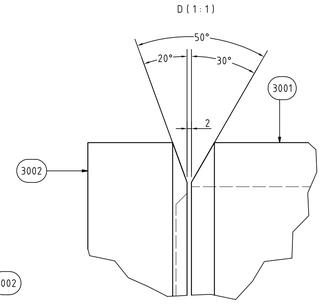

H-H (1 : 5)

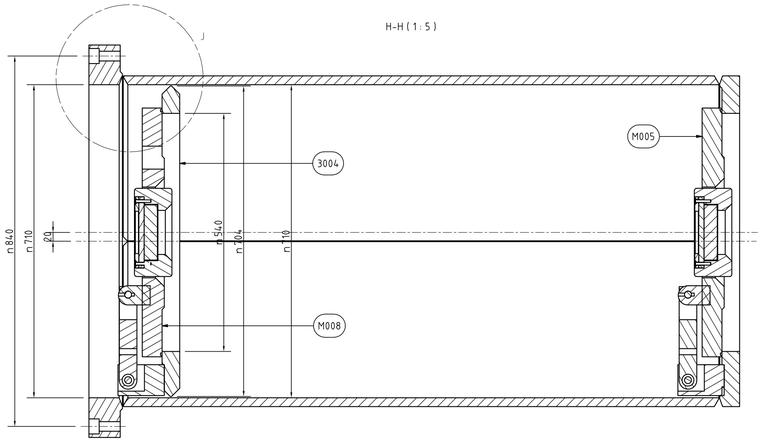

J (1 : 1)

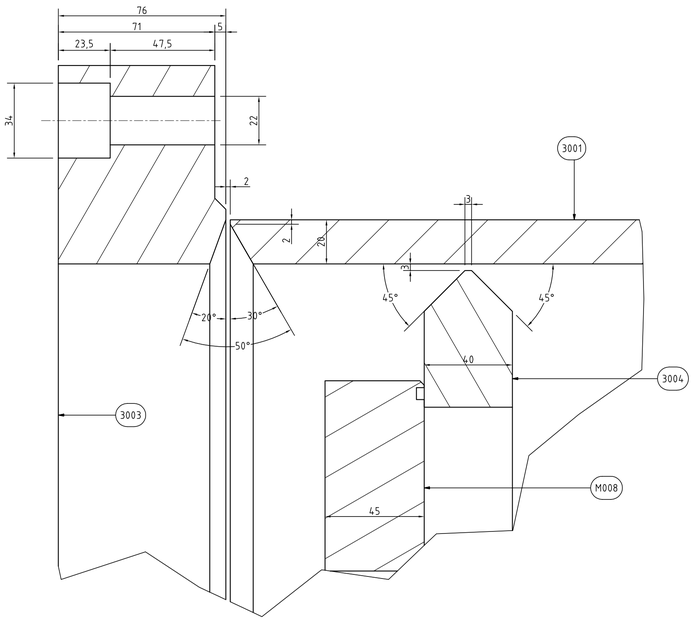

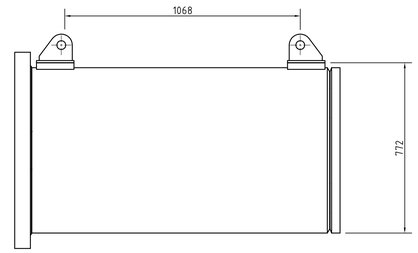

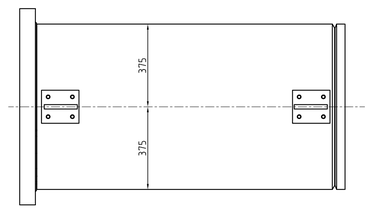

CRITERIO ACCETTABILITA' SALDATURE

UNI EN ISO 5817 - livello di qualità: B (elevato)

SALDATURE D'ANGOLO TIPICHE ECCETTO DOVE DIVERSAMENTE INDICATO

S1 ≥ S2
Z=S2
SP=0.7xS2
S2 < S1

PESO TOTALE n°1 COMPLESSO = 942,91 kg

Pos.	Qtà	Descrizione	Larg.(mm)	Lung.(mm)	Peso Unit.	Materiale	Vedi dis.
ELENCO PARTI							
305	2	Attacco Sollevamento			3,9 kg		11118 305
3027	2	Lam. 30	170	150	4,9 kg	P355NH UNI EN 10028	11118 3027
fune2	1	= descrizione parte =			0,0 kg	S275JR UNI EN 10025	fune2
M008	1	Assieme portello			88,5 kg		M008
M007	2	Assieme cerniera			17,2 kg		11118 M007
3004	1	Lam. 40	704	704	44,2 kg	P355NH UNI EN 10028	11118 3004
M005	1	Assieme portello			90,1 kg		M005
3003	1	Lam. 76	890	890	119,8 kg	P355NH UNI EN 10028	11118 3003
3002	1	Lam. 45	750	750	67,8 kg	P355NH UNI EN 10028	11118 3002
3001	1	Lam. 20	2283,8	1351	480,7 kg	P355NH UNI EN 10028	11118 3001

REV	DATA	DESCRIZIONE FIRMA CONTR	APPR

Cliente / Customer: Robbins
THE ROBBINS COMPANY
29100 Hall Street
Solon, Ohio 44139 USA

CO.ME.SA. s.r.l.

Progetto / Project: MATLOCK-PASSAGGETTI
ROBBINS DRAWING 1034772

Commessa / Job: 183_11
File / File: 188_11_DF_001_02
Formato / Size: A/1

Descrizione / Description: ASSEMBLY

Scala / Scale: 1:100
Foglio / Sheet: 1
di / of: 1

ELABORATO - DRAWING
188_11_DF_001_02
COMM. No. | Dwg. No. | Rev.

N.B. - A TERMINE DI LEGGE CI RISERVIAMO LA PROPRIETA' DI QUESTO DISEGNO CON DIVIETO DI RIPRODURLO O DI RENDERLO COMUNQUE NOTO A TERZI SENZA NOSTRA AUTORIZZAZIONE
N. B. - IT MUST NOT BE USED REPRODUCED TRANSMITTED OR DISCLOSED WITHOUT THE PRIOR WRITTEN PERMISSION OF COMESA

KAESER COMPRESSORS

Built for a lifetime.™

Breathing Air System

KBS SERIES

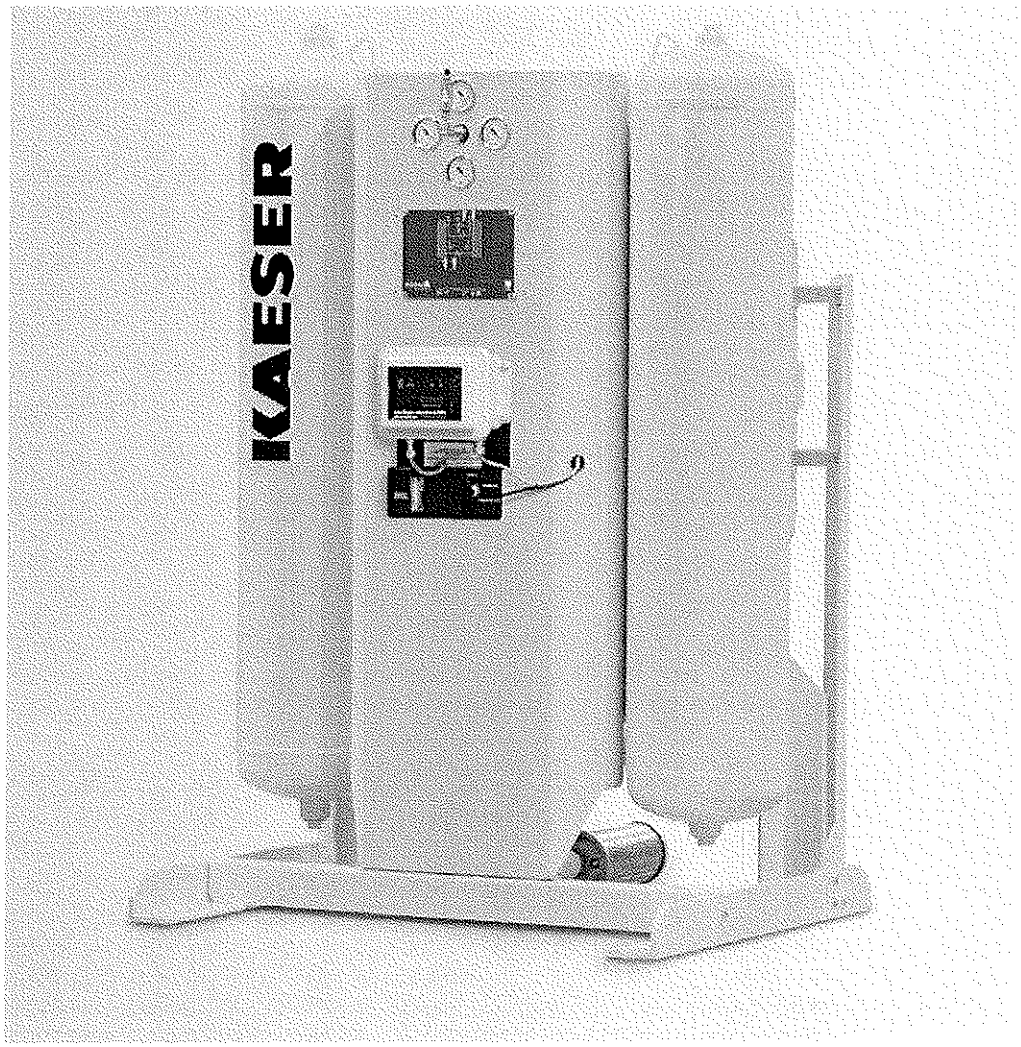

Breathable air

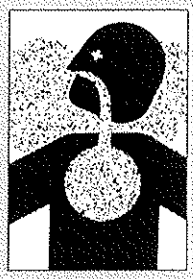

Our bodies have a limited capacity to filter the air we breath. Anything much smaller than 10µm will travel past the nose and into the lungs. When contaminants reach the lungs, respiratory illness can occur, but when they hit the bloodstream they can be deadly.

Carbon monoxide gas has no odor, taste or color, but even in small concentrations it is quickly absorbed into the bloodstream. It has a detrimental effect on coordination, reaction time, and visual acuity, subjecting even the most safety conscious worker to accidents. In higher concentrations, it is lethal.

The KBS is a complete purification system designed to remove excessive moisture, solid particles, oil and oil vapor, and carbon monoxide from ordinary compressed air. The OSHA Grade D air it produces can feed face masks, hoods, and other breathing devices to protect worker health and safety, while improving productivity.

Typical applications

Petrochem industries - oil and gas industries must protect their workers from the inhalation of hazardous fumes, gases, and vapors inherent in gas and chemical processing operations.

Construction industries - proper handling and working protection is critical to the health and safety in shot blasting and asbestos remediation.

Coating and paint spraying - automotive and manufacturing environments utilize atomized paint to spray coatings. Workers can be exposed to airborne paint emissions. Even small scale auto body shops and light manufacturing need to provide workers with clean breathing air.

Confined spaces - mines, vats, tanks, boilers, ships' hulls, and even grain storage facilities can be deadly traps of stale or contaminated air.

Meet health and safety requirements

Environmental safety standards regulate the need for fresh air supplies to ensure the safety of workers. Kaeser Breathing Air Systems are engineered to supply Grade D breathing air for flows from 15 to 940 scfm in accordance with the following standards:

OSHA: CFR1910.134
(Occupational Safety and Health Assoc.)

CSA: Z180.1-00
(Canadian Standards Assoc.)

CGA: Pamphlet G-7
(Compressed Gas Association)

ANSI: Z88.2-1080
(American National Standards Institute)

Six stage purification

Stage 1 A general purpose coalescing filter (KPF) removes liquid contaminants and particles 1 micron and larger.

Stage 2 An ultra high efficiency coalescing type oil removal filter (KOX) removes virtually all oil aerosols and provides ISO Class 1 solid particle removal.

Stage 3 KAD pressure-swing regenerative desiccant dryer reduces the moisture content to ensure the effectiveness of the catalyst bed.

Stage 4 Catalytic converter lowers CO concentrations by converting CO to CO_2.

Stage 5 A particulate removal afterfilter (KPF-RF) removes contaminants 1 micron and larger from the air stream.

Stage 6 KVF activated carbon filter removes oil vapor and undesirable odors (and other gases normally adsorbable by activated carbon). A final layer of media provides ISO Class 1 solid particle removal.

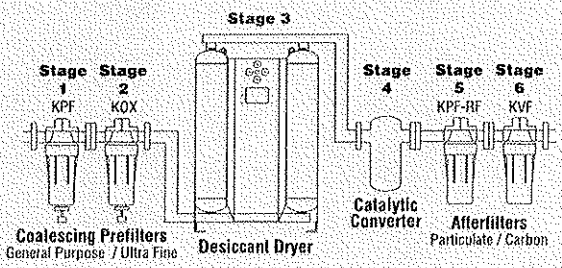

Breathing Air System

Standard features

1 Filtration and monitoring

- Coalescing filters with automatic drain valves and differential pressure gauges
- CO catalyst convertor
- Particulate afterfilter with differential pressure gauge
- Activated carbon filter
- Air sample ports for optional analyzer installation

2 Instrumentation

- Left and right tower pressure gauges
- Purge pressure gauge
- Inlet pressure gauge
- Color change moisture indicator

3 Standard controller

- NEMA 4/4X with critical LED indicators
- Soft on/off switch with 2 power recovery modes
- Switching failure alarms
- Adjustable service indications
- Tower / valve status LED's
- Voltage free common alarm contacts
- RS232 communications port

Advanced controls (optional)

- Vacuum fluorescent text display
- Automatic purge saver
- High inlet temperature & low inlet pressure alarms

Recommended option: Carbon Monoxide (CO) monitor

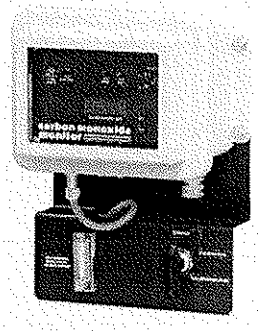

- Digital readout of CO concentration
- Visual and audible alarm
- Adjustable high and low alarms
- Contacts for remote alarm
- Push-to-test button
- Multiple alarm capabilities
  - CO and Oxygen
  - CO and dew point
  - CO, oxygen, and dew point

or Wall-Mount: CO Monitor Kit

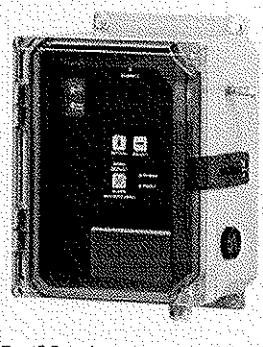

- For CO only

Other options

- Purge Saver - automatically matches purge air consumption to air demand to save energy
- Nema 7 electrics (explosion proof)
- Copper/brass or stainless steel instrument tubing and fittings for severe environments
- SSPC-SP10 sandblast and epoxy paint for severe environments

Selecting the proper model

To correct rated capacity for actual operating conditions, refer to "Capacity Correction Factors for Operating Conditions" and find the capacity correction factor corresponding to the inlet pressure and temperature. Multiply the capacity correction factor by any purifier's rated capacity to determine its capacity at your operating conditions. Capacity correction factors for conditions not shown may be interpolated. To determine purge air volume subtract outlet flow from rated capacity. To determine the outlet flow at your operating conditions, subtract the purge air flow from the capacity at your operating conditions. Consult factory if assistance is needed.

KBS purifiers help meet standards for breathing quality compressed air

The table below shows a comparison of the maximum allowable concentrations of contaminants allowed by OSHA standard 1910.134 for Grade D breathing air.

Contaminant	Maximum Allowable Concentration OSHA (1)
Carbon Monoxide (CO) (*ppm or mL/m³* by volume)	10
Carbon Dioxide (CO_2) (*ppm or mL/m³* by volume)	1000
Condensed Hydrocarbons (mg/m^3)	5
Odor	Not Detectable
Moisture Content (dew point temperature)	10°F (5.6°C) below ambient temperature (at 1 atm. pressure)

NOTES:

- The OSHA standard states that compressed breathing air shall meet at least the requirements for Type 1-Grade D breathing air described in the ANSI/Compressed Air Gas Association Commodity Specification for Air ANSI/CGA G-7.1.
- The KBS will remove only those gaseous contaminants normally absorbable by activated carbon. Air that is grossly contaminated or oxygen deficient cannot be purified to levels acceptable for breathing.

Specifications

Model	Rated Capacity* (scfm)	Outlet Flow (scfm)	Power Supply (V/ph/Hz)	In/Out Connections (in.)	Dimensions W x D x H (in.)	Weight (lb.)
KBS 15	18	15	85-264/1/47-63 AC 11.5-28 V DC	½ NPT(F)	35 x 35 x 49	440
KBS 25	30	25				450
KBS 35	42	35		¾ NPT(F)		455
KBS 50	60	50		1 NPT(F)	35 x 35 x 64	560
KBS 75	90	75			37 x 35 x 79	700
KBS 95	114	95			50 x 41 x 57	820
KBS 135	162	135				820
KBS 205	246	205		1½ NPT(F)	56 x 43 x 75	1190
KBS 305	366	305		2 NPT(F)	62 x 51 x 65	1405
KBS 375	450	375			66 x 51 x 73	1560
KBS 490	590	490			55 x 70 x 103	1650
KBS 625	750	625			63 x 75 x 107	2800
KBS 775	930	775		3 FLG	62 x 85 x 112	3275
KBS 940	1130	940		3 FLG	66 x 82 x 115	3750

***Rated capacity:** Based on compressed air saturated at 100°F and 100 psig.

Carbon monoxide outlet concentration: 10 PPMw achieved with inlet concentration of ≤ 135 PPMw
5 PPMw achieved with inlet concentration of ≤ 100 PPMw

- Maximum inlet temperature: 120°F
- Maximum allowable working pressure: 150 psig
- Maximum/minimum ambient air temperature: 130/40°F

Capacity Correction Factors for Operating Conditions

Inlet Pressure psig	Inlet Temperature 100°F	105°F	110°F	115°F	120°F
60	0.65	0.64	0.62	0.60	0.58
70	0.74	0.73	0.71	0.69	0.66
80	0.83	0.81	0.80	0.77	0.74
90	0.91	0.89	0.87	0.85	0.81
100	1.00	0.98	0.96	0.93	0.89
110	1.04	1.02	1.00	0.97	0.93
120	1.08	1.06	1.04	1.00	0.96
130	1.12	1.10	1.08	1.04	1.00
140	1.16	1.14	1.11	1.08	1.03
150	1.20	1.18	1.15	1.12	1.07

Specifications are subject to change without notice.

KAESER COMPRESSORS

Built for a lifetime.™

www.kaeser.com

Kaeser Compressors, Inc.
511 Sigma Drive
Fredericksburg, VA 22408 USA
Telephone: 540-898-5500
Toll Free: 800-777-7873
info.usa@kaeser.com

Kaeser Compressors Canada Inc.
3760 La Verendrye Street
Boisbriand, QC J7H 1R5 CANADA
Telephone: (450) 971-1414
Toll free: (800) 477-1416
info.canada@kaeser.com

Kaeser Compresores de México S de RL de CV
Calle 2 #123
Parque Industrial Jurica
76100 Querétaro, Qro.
Telephone: 01 (442) 218 64 48
sales.mexico@kaeser.com

Kaeser Compresores de Guatemala y Cia. Ltda.
Calz. Atanasio Tzul 21-00, zona 12
El Corlijo II, Bodega 501
01012–Guatemala City
Telephone: +502 2412-6000
info.guatemala@kaeser.com

© 2011 Kaeser Compressors, Inc. All rights reserved. 12/11
USKBS

KAESER COMPRESSORS

Built for a lifetime.™

Screw Compressors

DSD SERIES

Capacities from: 424 to 1024 cfm
Pressures from: 80 to 217 psig

Built for a lifetime

Maximum efficiency and reliability have long been synonymous with Kaeser Compressors. Our commitment to excellence drives us to continually enhance and optimize our compressed air system solutions. With a cutting edge research and development team committed to producing industry leading products, Kaeser constantly strives to offer lasting solutions for our customer's compressed air needs. The DSD series rotary screw compressor delivers on all accounts.

Kaeser's unique Sigma Profile airend and intelligent Sigma Control 2™ system, combined with the latest one-to-one drive technology mean that our DSD compressors can guarantee exceptional energy savings, without compromising on durability or ease of maintenance. Our customers expect excellence and we make it happen.

Built to perform. Built to last. Kaeser compressors are built for a lifetime.

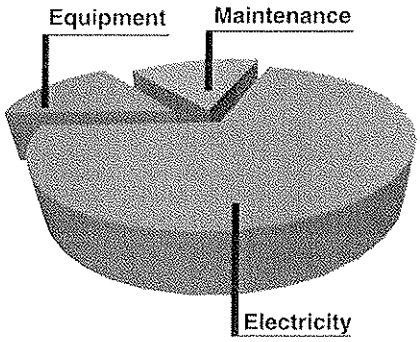

70% of Your Long Term Compressor Cost is Electricity

Analyze the total cost of a compressed air system and you'll realize that power cost is significant. In just one year it could exceed the price of the compressor itself. Over a period of ten years, this could consume 70% of your overall air system costs. That's why it is important to investigate energy efficiency when considering a new compressor or designing an air system.

A Perfect Match

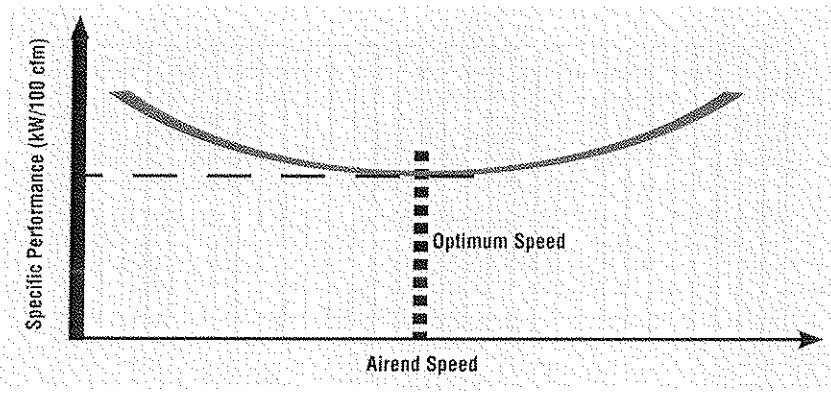

Unlike the competition, Kaeser Compressors makes many different airends to that we can apply them at their optimal speed and performance.

[1] Sigma Profile Airend

Our single-stage, flooded rotary screw airend

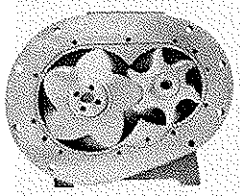

delivers pressures up to 217 psig, and features our power saving Sigma Profile™ design. Our airends are precision machined and optimized in size and profile to match the airend speeds with their best specific performance (see *A Perfect Match* curve).

[2] True Direct Drive

In our design, the motor is directly connected to

the airend with a one-to-one coupling, providing maximum transmission efficiency. This true direct drive eliminates gear drive components, heat and power losses. It is also maintenance free, increasing reliability and uptime. A cast housing is doweled and pinned to assure perfect alignment.

[3] Premium Efficiency Drive Motor

Kaeser uses only premium efficiency Totally Enclosed Fan Cooled (TEFC) motors with class F insulation for extra protection from heat and contaminants. Remote grease fittings make maintenance a breeze. Each of the three motor windings is actively monitored through its own PT100 temperature sensor. Standard voltages are 460 or 575 V (3-phase, 60 Hz). Other voltages are available.

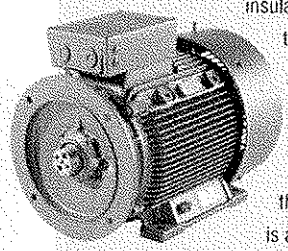

[4] Reduced Voltage Starting

Magnetic Wye-Delta reduced voltage starting is standard. This energy saving feature ensures low starting current and smooth acceleration.

DSD Series

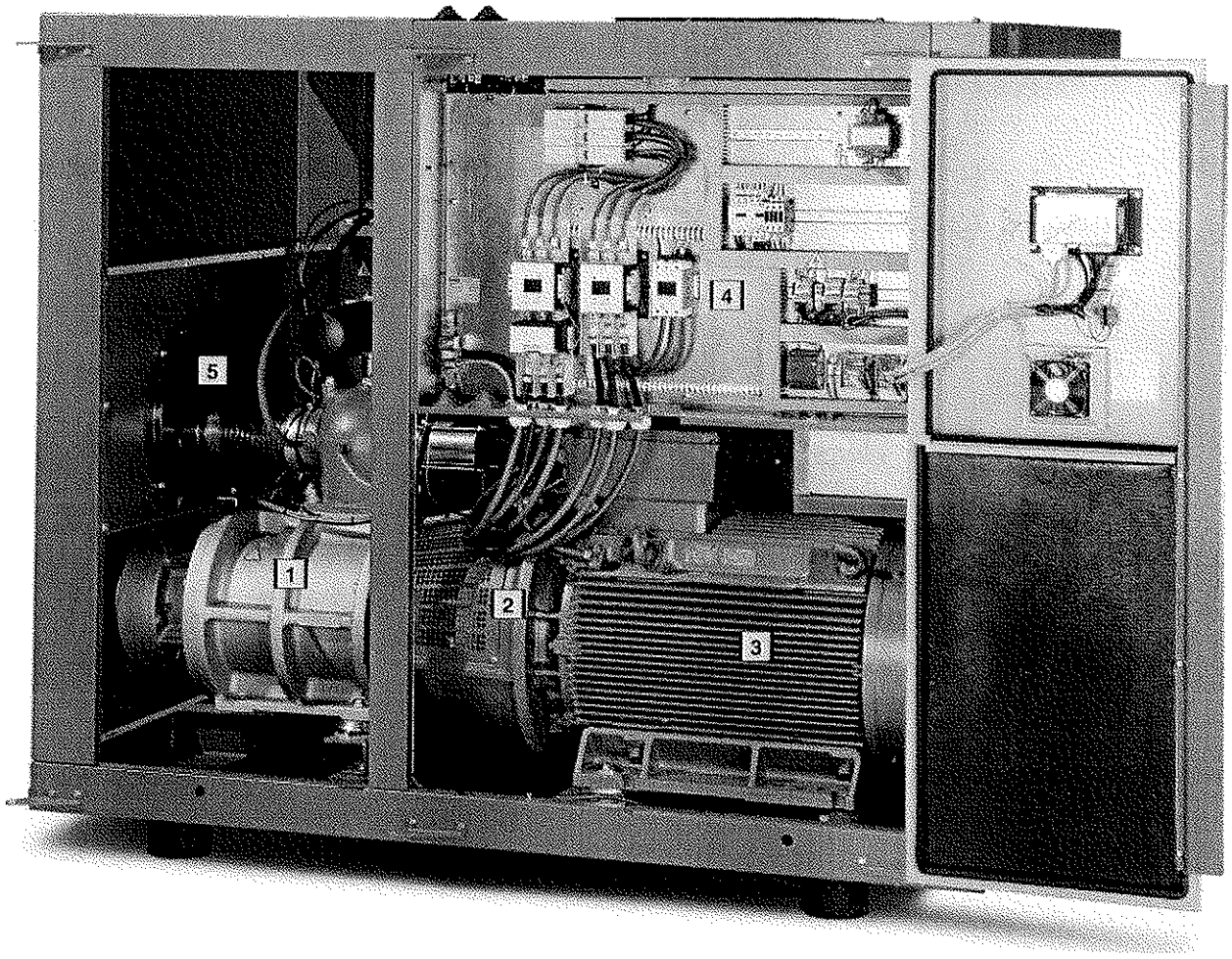

[5] Inlet Filter

We protect our compressors with a two-stage, 1 micron air intake filter. This extends airend life and fluid change intervals. The filter may be cleaned several times before replacement and is easily serviced with no tools required.

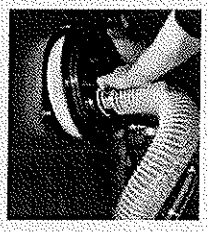

Fluid Separation System

A combined fluid reservoir and separator tank with 3-stage separation system ensures very low fluid carry-over and pressure drop. Centrifugal action combined with two-stage coalescing doubles filter service life and the net carry over is only 1-3 ppm.

Our no-leak design features rigid steel piping, flexible connections and vibration isolators. Each pressure vessel is ASME coded (CRN in Canada) and includes wet side/dry side fittings for manual check of differential pressure, an easy to read fluid level indicator, and our unique quick drain system.

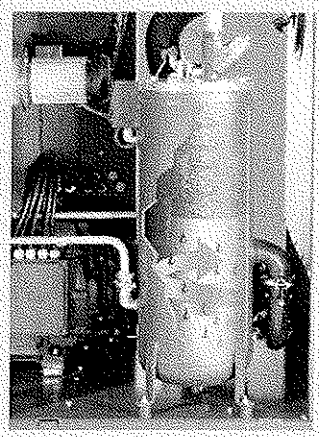

Unique Air Flow Design Optimizes Cooling

In Kaeser's "split-cooling" design, two separate cooling air inlet zones for the coolers and drive motor ensure optimum cooling. Drawing ambient air directly across the coolers and motor through separate zones eliminates pre-heating and results in longer lubricant life and a cooler running motor. This also results in much lower approach temperatures, improving moisture separation and air quality.

To increase reliability and reduce maintenance costs, the coolers are conveniently located on the outside of the unit, where dust and dirt build-up are easily seen and can be removed without dismantling the cooler.

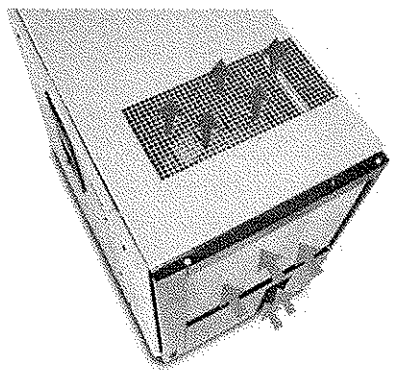

Powerful radial fans pull air through the coolers and create a vacuum within the cabinet that effectively cools the motor even under severe operating conditions. Top exhaust allows for convenient ducting and reduces the system footprint.

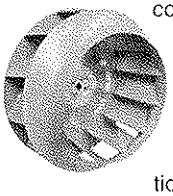

Intelligent Control and Protection

To protect your investment and ensure the most efficient operation possible, we control this compressor with our Sigma Control 2™. This intelligent

controller comes standard with multiple pre-programmed control profiles so you can select the one that best fits your application. Sigma Control 2 monitors 20 critical operating parameters, shuts the unit down to prevent damage and signals if immediate service is required. It also tracks preventive maintenance intervals and provides notice when PMs are due. Sigma Control 2 has superior communications capabilities. An Ethernet port and built-in web-server enable remote access and seamless integration into plant control/monitoring systems. ModBus and other industrial communications interfaces are also available as plug in options. See our Sigma Control 2 brochure for details.

Extremely Low Sound and Vibration

All DSD models come standard with Kaeser's superior cabinet that features complete metal enclosures with sound proofing liners and heavy-duty vibration isolation. Using one-to-one direct drive and our unique cooing airflow design with radial fans greatly reduces internal noise and vibration.

As a result, the DSD series are about 10 dB(A) quieter than conventional compressors of equal performance with noise emissions as low as 68 dB(A).

Optimized Efficiency

In DSD packages, one-to-one drive reduces the number of components needed compared to a gear drive unit thus increasing reliability and service life.

Kaeser has selected oversized airends specifically matched to produce the required output in flow and pressure. Compared to compressors using small, high-speed gear-driven airends, the DSD one-to-one drive provides triple savings: no-loss power transmission, improved power consumption, and reduced maintenance and related downtime costs.

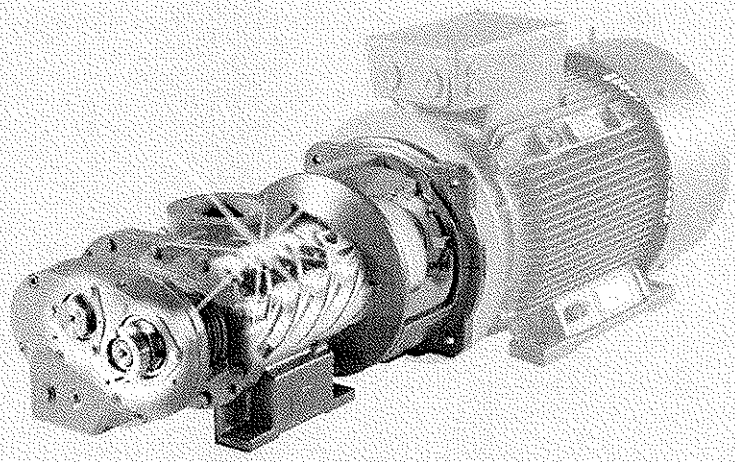

One-to-One Direct Drive
Airend RPM = Motor RPM

Options

Water-Cooled

Standard units are air-cooled, but water-cooling is available.

Sigma Frequency Control

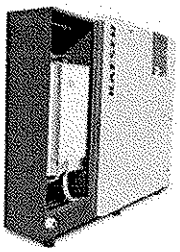

All DSD units are available with optional SFC drive. This provides the ultimate in part-load efficiency and stable pressure (within +/- 1 psig). Kaeser uses Siemens' variable frequency controls for reliability and maximum efficiency. EMI filter, contactor for galvanic separation and a line reactor are all standard on Kaeser SFCs. Drive cabinet cooling fans ensure reliable operation even in the toughest environments.

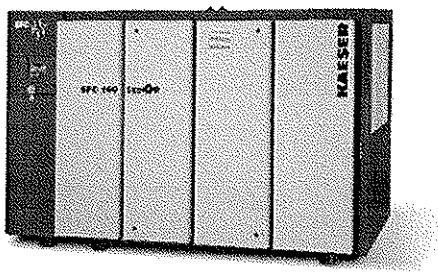

Refrigerated Dryer Option

- Single point hook-up integrated dryer
- CFC-free R134a refrigerant
- Moisture separators and Eco-Drains
- Completely piped and ready for installation
- Stainless steel plate type heat exchangers

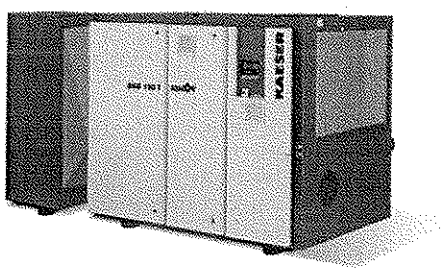

Available on DSD 125, 150 and 175.

Dimensions

Standard Version DSD 125, 150, and 175

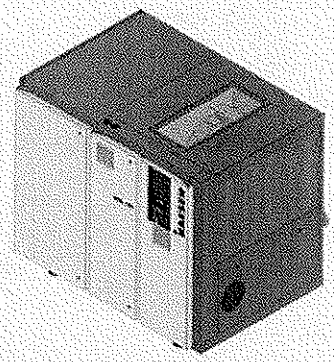

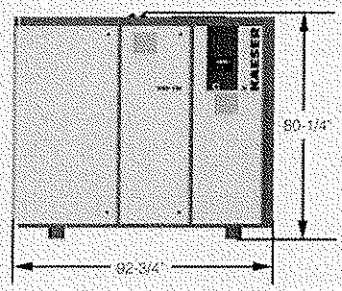

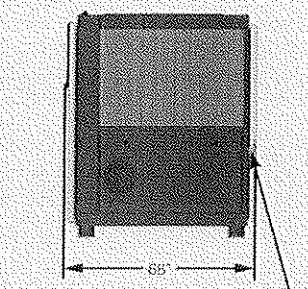

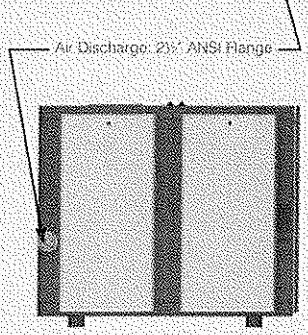

Standard Version DSD 200 and 250

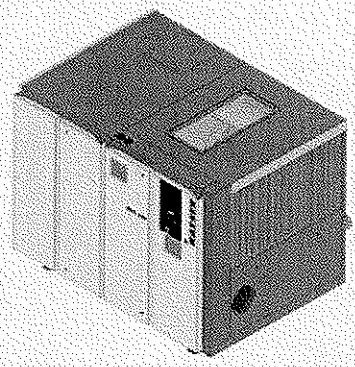

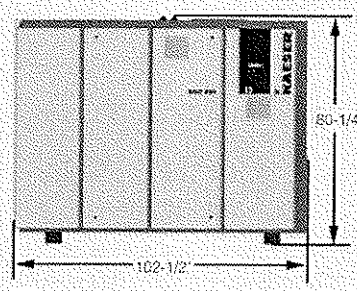

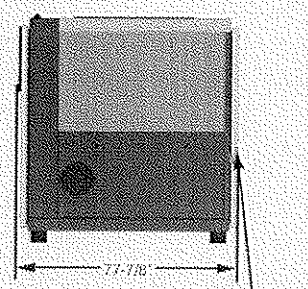

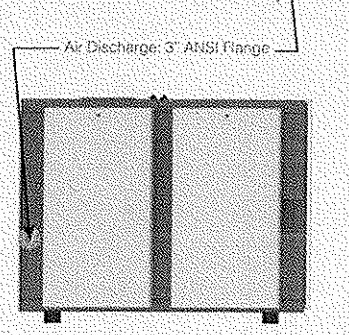

Dimensions are for reference only — please contact Kaeser for dimensional drawings.

CAGI Certified Performance

Our compressors' energy efficiency has been tested and confirmed by an independent laboratory as part of the Compressed Air and Gas Institute's *Rotary Screw Compressor Performance Verification Program.*

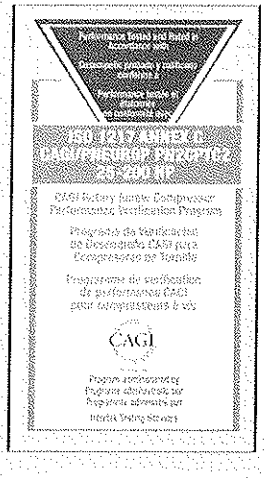

To find CAGI data sheets for these compressors, scan this QR code with your Smartphone or go to www.kaeser.com/cagi.

DSD Series - Technical Specifications for Standard Units*

Model	Pressure Range (psig)	Capacity (cfm) (1)	Rated Motor Power (hp)	Dimensions L x W x H (in.)	Weight (lb.) (2)	Sound Level (dB(A)) (3)
DSD 125	125	569	125	92¾ x 68 x 80¼	6283	71
	175	424				
DSD 150	125	671	150	92¾ x 68 x 80¼	7055	73
	175	544				
DSD 175	125	660	175	92¾ x 68 x 80¼	7496	74
	175	636				
	217	526				
DSD 200	125	862	200	102½ x 77⅞ x 80¼	8047	73
	175	639				
	217	530				
DSD 250	125	1003	250	102½ x 77⅞ x 80¼	8267	73
	175	837				
	217	614				

(1) Performance rated in accordance with CAGI/PNEUROP PN2CPTC2 test code. (2) Weights may vary slightly depending on airend model. (3) Per ISO 2151 using ISO 9614-2.

*** For units with SFC and/or dryer, please contact your local authorized Kaeser distributor.**

Specifications are subject to change without notice.

Compressed Air System Design

Kaeser's team of engineers are always at your service to help design or optimize your compressed air system.

Using our Air Demand Analysis (ADA) and Kaeser Energy Saving System (KESS) we can evaluate your existing installation and demonstrate how proposed changes will improve your system performance.

Kaeser can also produce two-dimensional and three-dimensional drawings of the proposed system. This is a huge benefit in project planning. It helps visualize new equipment and how it will fit into the building along with existing equipment, piping, walls, vents, etc. This facilitates installation planning.

From complex installations to challenging environments to limited space, Kaeser can design a system to meet your specific requirements for performance and reliability.

KAESER COMPRESSORS

Built for a lifetime.™

www.kaeser.com

Kaeser Compressors, Inc.
511 Sigma Drive
Fredericksburg, VA 22408 USA
Telephone: 540-898-5500
Toll Free: 800-777-7873
info.usa@kaeser.com

Kaeser Compressors Canada Inc.
3760 La Verendrye Street
Boisbriand, QC J7H 1R5 CANADA
Telephone: (450) 971-1414
Toll free: (800) 477-1416
info.canada@kaeser.com

Kaeser Compresores de México S de RL de CV
Calle 2 #123
Parque Industrial Jurica
76100 Querétaro, Qro.
Telephone: 01 (442) 218 64 48
sales.mexico@kaeser.com

Kaeser Compresores de Guatemala y Cia. Ltda.
Calz. Atanasio Tzul 21-00, zona 12
El Cortijo II, Bodega 501
01012–Guatemala City
Telephone: +502 2412-6000
info.guatemala@kaeser.com

© 2011 Kaeser Compressors, Inc. All rights reserved. 09/11
USDSD

MODEL EPB2016-376/377
SECTION 8 • Main Drive Assembly

1. Main drive assembly drawing
2. Drive motor assembly drawing
3. Torque calculations

NOTES:

1. TORQUE ALL FASTENERS PER ROBBINS SPECIFICATION 5750 9900 17 EXCEPT AS NOTED.

2 APPLY LIGHT MACHINE OIL AND TORQUE TO 1875 N-m.
ALTERNATE M30x240mm G12.9 PERMISSIBLE HOWEVER THE TORQUE IS STILL 1875 N-m.

3. A SINGLE LIFTING LUG IS NOT ADEQUATE TO SUPPORT ENTIRE DRIVE ASSEMBLY. USE STRAPS OR MULTIPLE LIFT POINTS.

4. OIL LEVEL READING VALID ONLY WHEN MACHINE IS LEVEL. GEAR REDUCERS ARE WATER COOLED, 20 LITERS PER MINUTE. MOTORS ARE WATER COOLED. COOLING WATER FLOW: 20 LITERS PER MINUTE AT MAX. 30°C (25°C PREFERRED). SEE WATER SYSTEM SCHEMATIC FOR DETAILS.

5. CLOCK GEAR DRIVES AND MOTORS AS INDICATED ON THIS SHEET. MAKE SURE THE DRAIN SLOT ON THE SAFESET COVERS ARE FACING DOWN. TAG EACH DRIVE ASSEMBLY WITH ITS DRIVE POSITION AS SHOWN.

6. TESTING AT INSTALLATION OF MAIN DRIVE ASSEMBLY IN CUTTERHEAD SUPPORT:
BACKLASH: CHECK NEAR CENTER OF FACE WIDTH. USE LEAD WIRE AND ADD THICKNESS OF CRUSHED WIRE FROM BOTH TOOTH FLANKS TO GET TOTAL BACKLASH (1.5mm - 2.0mm).
CONTACT PATTERN: THE 8 HOUR IN-SHOP TEST RUN FOR MAIN BEARING & SEALS IS ADEQUATE FOR CONTACT PATTERN TESTS. SEND RESULTS TO QUALITY DEPARTMENT, SOLON, OH.

7. CLEAN ALL PINION TEETH AND APPLY BLUING DYE TO BOTH SIDES OF PINION TEETH ACROSS ENTIRE FACE WIDTH. INSTALL DRIVES INTO CUTTERHEAD SUPPORT FOR TEST RUNNING. COOLING WATER MUST ALWAYS BE USED FOR MOTORS AND FOR GEAR REDUCERS DURING OPERATION. TO OBTAIN A CONTACT PATTERN LOAD MUST BE APPLIED ON THE DRIVING SIDE OF THE PINION TOOTH.

8. GREASE FITTINGS LOCATED AT EACH END OF MOTOR. REMOVE DRAIN PLUGS, ONE AT EACH END WHEN ADDING GREASE. SEE MANUAL FOR CORRECT AMOUNT & TYPE.

9 CONDENSATION DRAIN PLUGS.

10 WATER PORTS ARE 1/2" JIC FITTINGS.

11 OIL LEVEL SIGHT TUBE ALL FACE THE INSIDE

12 OIL BREATHER VENTS ON TOP

QTY	PART No.	DESCRIPTION	DWG No.	WT. Total	ITEM
5	2004159	MOTOR GEAR DRIVE SAFESET ASY	2004159	20125.2 kg	1
160	636-176	WASHER, NORD-LOCK M30		6.8 kg	2
160	A22153-82408	SHCS, M30x240mm C10.9	A22153	262.1 kg	3
1	D112373-1	DISASSEMBLY TOOL, SAFESET	D112373		4*
1	1026128	SAFESET PUMP	1026128	10.6 kg	5*

ITEMS MARKED WITH * ARE NOT SHOWN ON DRAWING

SAFESET PRESSURE TABLE	
MACHINE	PRESSURE (MPa)
EPB2016-376	64
EPB2016-377	64

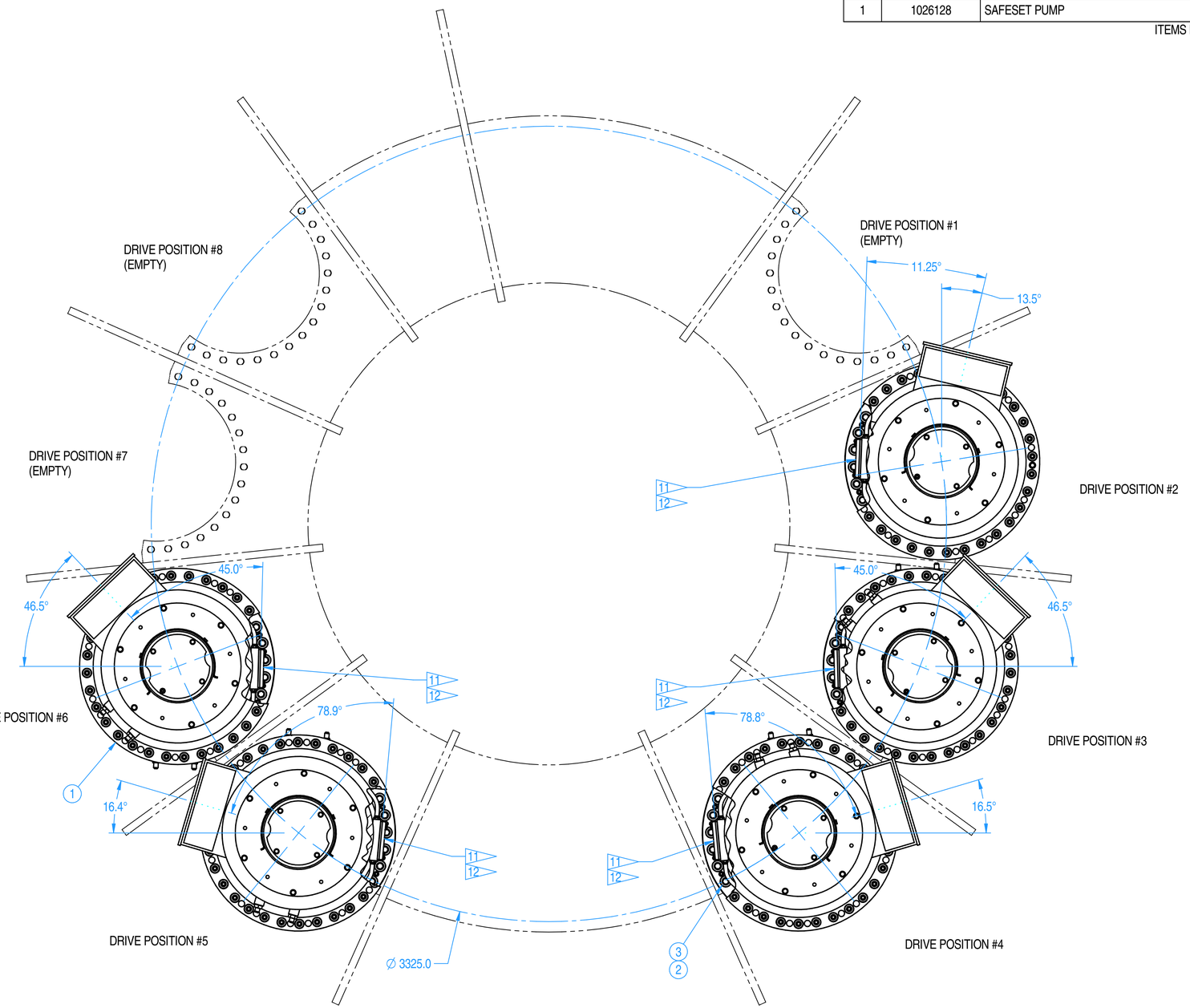

PROPRIETARY NOTICE
The information disclosed herein, is the sole property of Robbins Company. Any reproduction in part or whole, or use for the duplication in full or part, used by, or disclosed to any person, firm or corporation without the written consent of the Company. By accepting this information, recipient agrees to hold it confidential and to use it only for the purpose for which it is furnished, and to return it promptly upon request. Any reproduction of this material is an infringement of the copyright laws.

MACHINE	NEXT ASSY
EPB2016-376	1002830
EPB2016-377	1002830

UNLESS NOTED ALL DIMS ARE mm
TOLERANCES UNLESS NOTED

0-300	±.1	X	±1.0
300-1500	±.3	X.X	±.1
1500-6000	±.6	X.XX	±.40
6000+	±.12	X.XXX	±.100
		ANGLES	±1°
		SURFACE	63

THIRD ANGLE PROJECTION
DIMENSIONS (X) ARE REF.
ALL GEOMETRIC DIMENSIONING & TOLERANCING PER ANSI Y14.5-2009

REV	DESCRIPTION	REV'D BY DATE	APP'D BY DATE

TITLE: MAIN DR ARRANGEMENT 5 DR SFS NB

SIZE	DWG No.	REV	SHT	SCALE
D	1048459	0	1 OF 2	SEE DETAIL

DO NOT SCALE

DRAWN BY	CHECKED STANDARDS
A.SHAFER	J.BELLO
DATE	CHECKED DESIGN
5/9/2012	J.BELLO
WEIGHT TOTAL	APPROVED BY
20404.7 kg	J.BELLO
	DATE
	5/10/2012

Robbins
www.TheRobbinsCompany.com

1048459

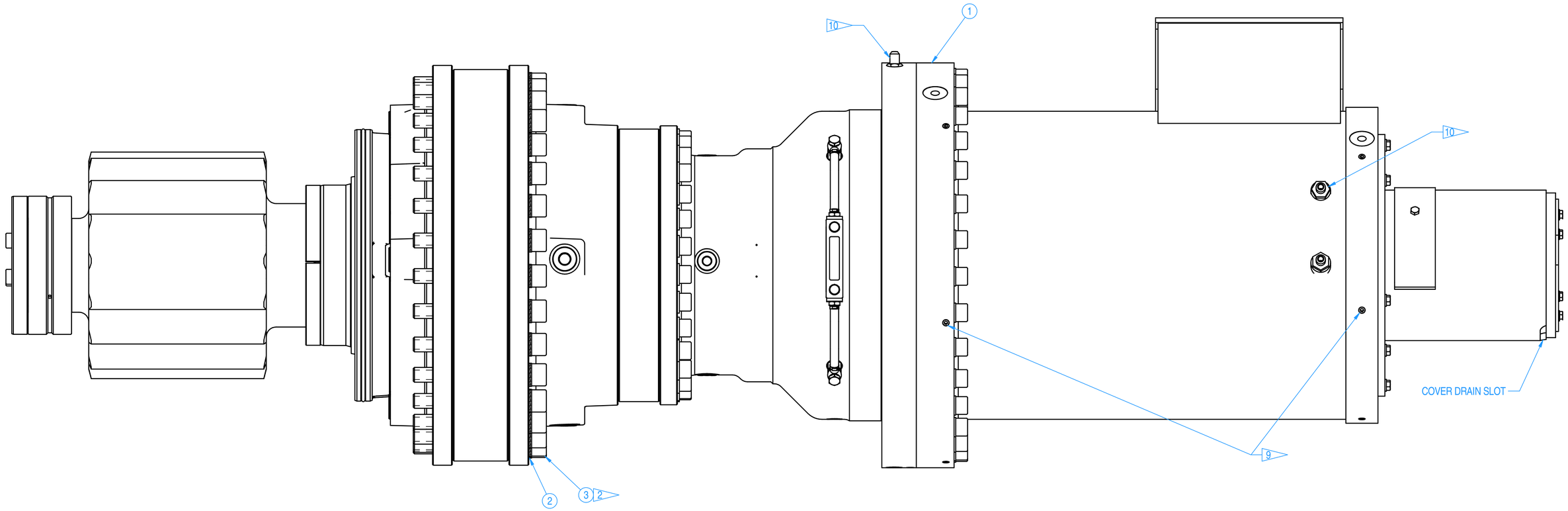

1048459

MACHINE	NEXT ASSY
EPB2016-376	1002830
EPB2016-377	1002830

UNLESS NOTED ALL DIMS ARE mm

TOLERANCES UNLESS NOTED

0-300	±1.5	X	±1.5
300-1500	±3	X.X	±1.0
1500-6000	±6	X.XX	±.40
6000+	±12	X.XXX	±.100
		ANGLES	±1°
		SURFACE	6.3
		FINISH	

THIRD ANGLE PROJECTION

DIMENSIONS (X) ARE REF

ALL GEOMETRIC DIMENSIONING & TOLERANCING PER ANSI Y14.5-2009

PROPRIETARY NOTICE

The information disclosed herein, is the sole property of The Robbins Company, and remains the sole property. It shall not be duplicated in full or part, used by, or disclosed to any other party without prior written consent of The Robbins Company. By accepting this information, recipient agrees to abide in the entire information, without any modification whatsoever to the conditions. This material is on loan only, and is to be returned upon request to The Robbins Company.

REV	DESCRIPTION	REV'D BY DATE	APP'D BY DATE

TITLE

MAIN DR ARRANGEMENT 5 DR SFS NB

SIZE	DWG No.	REV	SHT	SCALE
D	1048459	0	2 OF 2	SEE DETAIL DO NOT SCALE

Robbins

DRAWN BY	CHECKED STANDARDS
A.SHAFER	J.BELLO
DATE	CHECKED DESIGN
5/9/2012	J.BELLO
WEIGHT TOTAL	APPROVED BY
20404.7 kg	J.BELLO
	DATE
	5/10/2012

www.TheRobbinsCompany.com

QTY	PART No.	DESCRIPTION	DWG No.	WT. Total	ITEM
1	2004163	GEAR DRIVE 70.59:1	2004163	2348.3 kg	1
1	2004161	ELECTRIC MOTOR, 210 KW	2004161	1548.6 kg	2
1	2002975	TORSION SHAFT	2002975	21.0 kg	3
2	2001436	08MJ-12MBSPP	2001416	0.3 kg	4
2	2001434	08MJ-08MBSPP	2001416		5
4	2001596	1/2" JIC END CAP	2001596	0.2 kg	6
32	636-172	WASHER, Zn NORD-LOCK M24	-	0.8 kg	7
1	A111732-3016570	O-RING, 6mm X 1657mm LG	A111732	0.0 kg	8
1	A111732-4017140	O-RING, 7mm X 1714mm LG	A111732	0.1 kg	9
32	A22153-71108	SHCS, M24x110mm G10.9	A22153	17.7 kg	10
1	5750013784	TORQUE COUPLING ASSEMBLY	5750013784	89.1 kg	11

NOTES:

APPLY LIGHT MACHINE OIL AND TORQUE TO 942 N-m (694.8 ft-lbs).

1. OPTIONAL GR. 12.9, APPLY LIGHT MACHINE OIL AND TORQUE TO 942 N-m (694.8 ft-lbs).
2.
3. APPLY COPPER BASED ANTI-SEIZE COMPOUND TO ALL SPLINES.

4.) SEE MAIN DRIVE ASSEMBLY FOR INDIVIDUAL DRIVE POSITION MOTOR AND GEAR DRIVE ORIENTATION.

5.) SEE INDIVIDUAL DRAWINGS FOR THE MOTOR AND GEAR DRIVE FOR WATER FLOW RATES AND TEMPERATURES.

6. PUMP SAFESET PRESSURE TO 60 MPa.

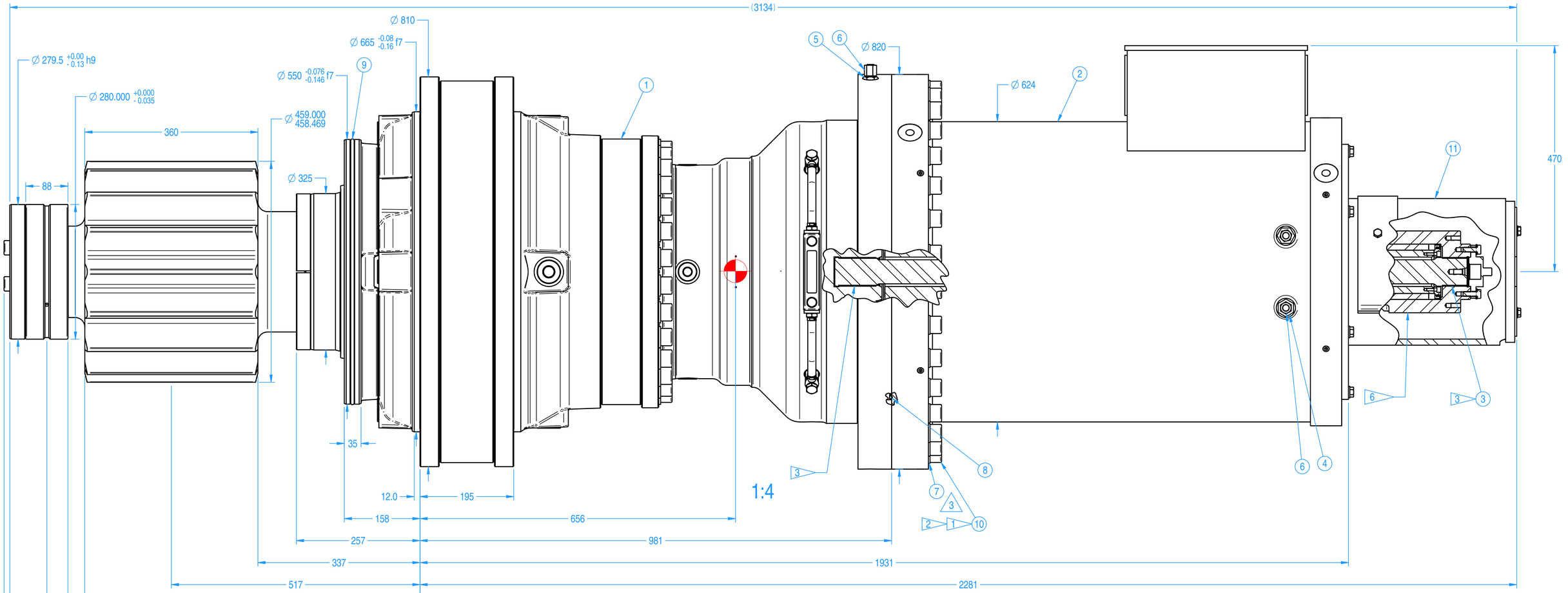

3	NORD-LOCK WSHR WAS 636-167 M20 SHCS WAS A22153-81208 M20x120mm LONG	ANS	11/04/11		
2	UPDATE MODEL ONLY PRBN 14531-10920-13	ANS	10/11/11		
1	MODEL UPDATE ONLY PRBN 15308-10700-02	ANS	8/24/11		
REV	DESCRIPTION	BY	DATE		

PROPRIETARY NOTICE

The information disclosed herein is the sole property of The Robbins Company, and remains their sole property. It shall not be duplicated in full or part, used for any purpose whatsoever without the prior written consent of The Robbins Company. By accepting this information, recipient agrees to abide in total with the conditions of this notice and to return it to The Robbins Company upon request or when no longer needed.

MACHINE	NEXT ASSY
EPB STD	

UNLESS NOTED ALL DIMS ARE mm

TOLERANCES UNLESS NOTED

0-300	±1.5
300-1500	±3
1500-6000	±6
6000+	±12

FAB TYPICAL

MACHINING TYPICAL

.XX	±.5
.XX	±1.0
.XX	± .40
.XXX	±.100
ANGLES	±1°
SURFACE	125/

DIMENSIONS (X) ARE REF

ALL GEOMETRIC DIMENSIONING & TOLERANCING PER ANSI Y14.5M-1982 AS APPLICABLE.

TITLE: MOTOR GEAR DRIVE SAFESET ASY

SIZE	DWG No.	REV	SHT	SCALE
D	2004159	3	1 OF 1	SEE DETAIL, DO NOT SCALE

DRAWN	CHECKED
A. SHAFER	J. BELLO
DATE 4/27/2011	DATE 8/12/2011
THIRD ANGLE PROJECTION	APPROVED
WEIGHT TOTAL: 4026.3 kg	J. BELLO
	DATE 8/12/2011

Robbins

www.TheRobbinsCompany.com

2004159

MODEL EPB2016-376/377
SECTION 9 • Rear shield Assembly

1. Rear shield assembly drawing
2. Thrust shoe interface layout
3. Thrust force calculations
4. Thrust cylinder drawings
5. Articulation cylinder drawings
6. Tail seal replacement procedure

QTY	PART No.	DESCRIPTION	DWG No.	WT. Total	ITEM
80	A67526-40308	SFHS, M12x30mm C8.8	A67526	2.6 kg	38
128	A67526-50358	SFHS, M16x35mm C8.8	A67526	8.3 kg	39
64	A22158-2	WASHER, HD NW OD M8	A22158	0.1 kg	40
16	A22158-4	WASHER, HD NW OD M12	A22158	0.1 kg	41
40	A22158-5	WASHER, HD NW OD M16	A22158	0.6 kg	42
160	A22158-9	WASHER, HD NW OD M36	A22158	17.7 kg	43

QTY	PART No.	DESCRIPTION	DWG No.	WT. Total	ITEM
1	1036404	REAR SHIELD PLUMBING	1036404	66366.9 kg	1
1	1036529	REAR SHIELD,SUPPORT FRAME	1036529	1075.9 kg	2
1	1036531	REAR SHIELD, SUPPORT FRAME	1036531	1075.9 kg	3
10	1034182	CYLINDER, ARTICULATION	1034182	10305.6 kg	4
12	1035955	CYL THRST Ø290Bx220Rx2200S	1035955	21252.9 kg	5
4	1036128	CYL THRST W/SENSOR Ø290Bx220R	1036128	7123.0 kg	6
10	D102156-1	CYLINDER, POSITION INDICATING	D102156	237.0 kg	7
20	1036267	CLEVIS, CYL, POSN INDICATING	1036267	121.7 kg	8
16	1036617	SPREADER, THRUST CYLINDER	1036617	2730.8 kg	9
16	1036618	SPREADER CUSHION	1036618	83.5 kg	10
16	1030203	SWING CONTROL RUBBER	1030203	5.3 kg	11
16	1030552	PIN RETAINER, THRUST CYL	1030552	6.9 kg	12
2	1030460	PIN STOPPER PLATE	1030460	8.9 kg	13
2	1030461	ROLLING STOPPER PIN	1030461	94.9 kg	14
16	1030553	SPREADER PIN, THRUST CYL	1030553	74.6 kg	15
20	5750005719	PIN, SLOTTED Ø199.950x365mm	5750000802	1903.2 kg	16
40	1028509	SPACER, Ø202mm ID, 35mm LG	1028509	43.0 kg	17
2	1036127	ARTICULATION SEAL, Ø6130 ID	1036127	52.8 kg	18
36	1036511	SEAL RETAINER	1036511	88.9 kg	19
36	1036512	SEAL RETAINER, REAR	1036512	94.1 kg	20
30	1036513	SEAL RETAINER, CENTER	1036513	324.7 kg	21
2	1036514	SEAL RETAINER, CENTER 2	1036514	21.6 kg	22
3	1036515	SEAL RETAINER, CENTER 3	1036515	32.3 kg	23
1	1036599	SEAL RETAINER, CENTER 1	1036514	10.8 kg	24
188	1030177	FORWARD TAIL SEAL	1030177	1665.8 kg	25
94	1030861	REAR TAIL SEAL	1030861	1179.1 kg	26
16	1032356	GASKET, GROUT	1032356	12.0 kg	27
16	1033211	COVER, GROUT	1032355	127.4 kg	28
20	B49248-10	KEYBAR, METRIC	B49248	24.0 kg	29
40	639-086	PIN, COTTER Ø5/32"x1" LG		0.1 kg	30
160	A22151-91405	HHCS, M36x140mm C8.8	A22151	253.0 kg	31
64	A22152-20205	HHCS, M8x20mm C8.8	A22152	0.9 kg	32
16	A22152-40405	HHCS, M12x40mm G8.8	A22152	0.8 kg	33
40	A22152-50455	HHCS, M16 x 45mm C8.8	A22152	4.4 kg	34
360	A22153-30209	SHCS, M10x20mm C12.9	A22153	9.3 kg	35
112	A22153-40255	SHCS, M12x25mm C8.8	A22153	4.7 kg	36
360	A22153-40359	SHCS, M12x35mm C12.9	A22153	18.3 kg	37

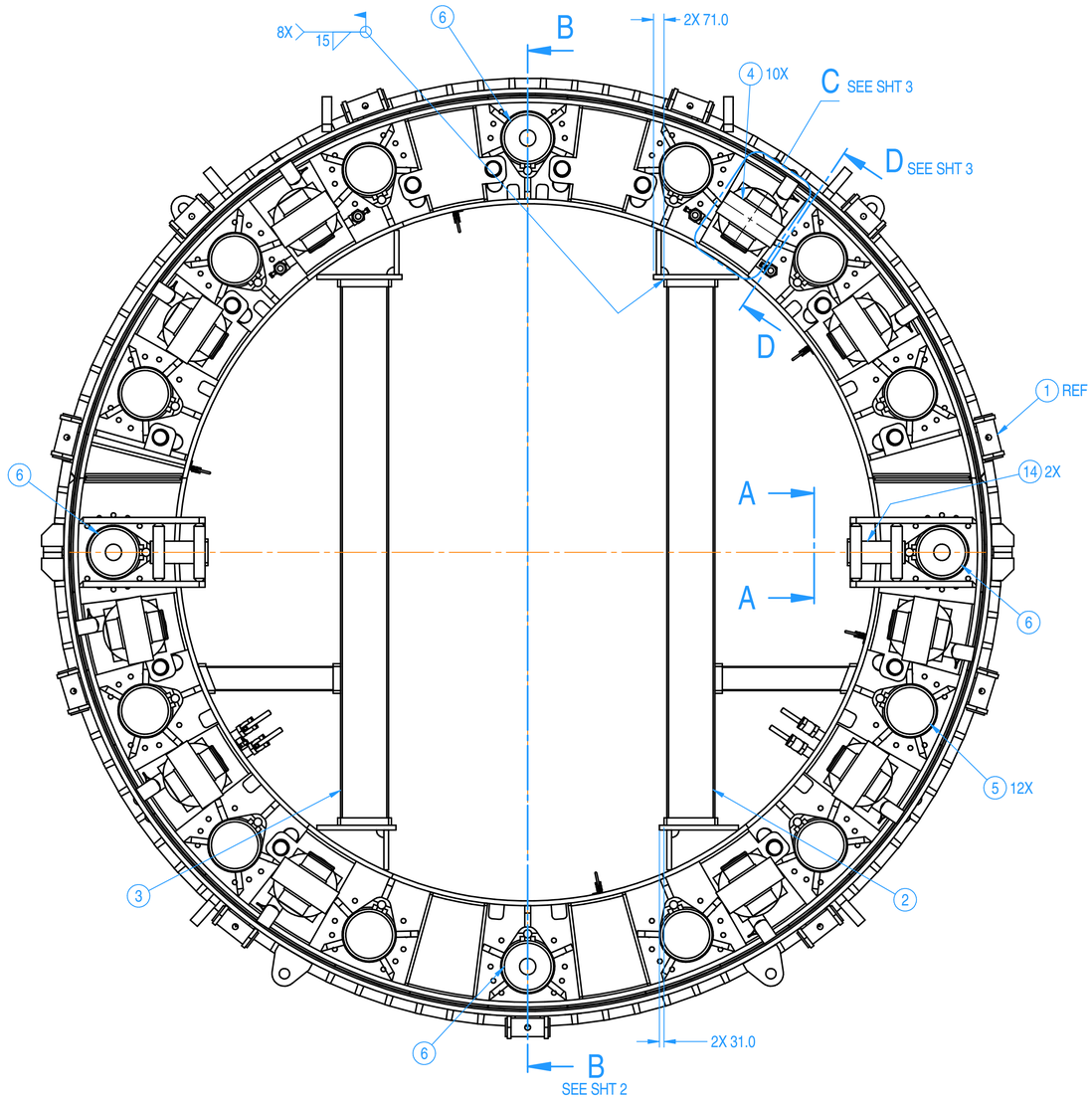

TRC P/N 1002833
REAR SHIELD ASSEMBLY
LOOKING AFT
1:20

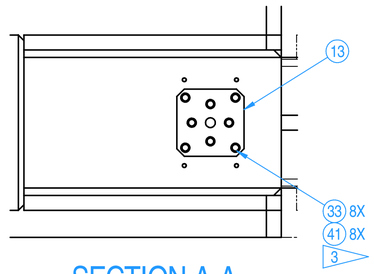

SECTION A-A
1:8
TYPICAL 2 PLACES

NOTES:

1. APPLY LOCTITE 242 AND TORQUE ALL FASTENERS PER DWG 5750 9900 17.
2. ALL WELDING SHALL MEET THE REQUIREMENTS OF THE LATEST EDITION OF THE AWS STRUCTURAL WELDING CODE (D1.1/D1.1M). ALL SECTIONS AS APPLICABLE UNLESS OTHERWISE NOTED. USE E70XX LOW HYDROGEN ELECTRODES OR EQUIVALENT.
3. TORQUE M10 TO 42 Nm
   TORQUE M12 TO 73 Nm
4. FOR INSTALLATION OF ARTICULATION SEALS (ITEM 18), AND SWING CONTROL RUBBER (ITEM 11) APPLY SILICONE SEALANT TO MOUNTING SURFACES PRIOR TO INSTALLATION.
5. FILL SPACE BETWEEN ARTICULATION SEALS, ITEM 18, WITH EP1 GREASE PRIOR TO INSTALLATION.
6. STORE AND HANDLE SEALS PER ROBBINS SPECIFICATION (A114668).
7. ARTICULATION SEAL COMPRESSION ALLOWANCE IS 1mm. SEAL RETAINERS (ITEMS 19 - 24) SHOULD BE IN CONTACT WITH REAR SHIELD WHEN COMPRESSED.
8. ALIGN CENTER SEAL RETAINERS, ITEMS 22, 23 24 WITH PLUMBING ON 1036404.
9. STAGGER ITEMS 19 AND 20 RELATIVE TO CENTER SEAL RETAINERS, SO THAT NO JOINTS ARE INLINE WITH EACH OTHER.
10. APPLY "FIRST FILL TYPE" TAIL GREASE TO TAIL SEALS ACCORING TO MANUFACTURES RECOMMENDATIONS PRIOR TO EXCAVATION.

PROPRIETARY NOTICE
This information disclosed herein, is the sole property of The Robbins Company and is considered confidential. It shall not be duplicated in full or part, used by or disclosed to any company or individual without the written consent of The Robbins Company. By accepting this information, recipient agrees to abide by the conditions of this notice and to return this drawing whatsoever in the conditions. This material is on loan only.

MACHINE	NEXT ASSY
EPB2016-376	1002830
EPB2016-377	

UNLESS NOTED ALL DIMS ARE mm
TOLERANCES UNLESS NOTED

0-300	±1.5	X	±1.5
300-1500	±3	X.X	±1.0
1500-6000	±6	X.XX	±.40
6000+	±12	X.XXX	±.100
		ANGLES	±1°
DIRECTION OF PROJECTION		SURFACE FINISH	125

DIMENSIONS (X) ARE REF.
ALL GEOMETRIC DIMENSIONING & TOLERANCING PER ANSI Y14.5-2009

REV	DESCRIPTION	REV'D BY DATE	APP'D BY DATE

TITLE: REAR SHIELD ASSEMBLY

SIZE	DWG No.	REV	SHT	SCALE
D	1002833	0	1 OF 3	SEE DETAIL
				DO NOT SCALE

DRAWN BY J.SPRAGUE
DATE 9/23/2012
WEIGHT TOTAL 116453.0 kg
CHECKED STANDARDS C.ROHDE
CHECKED DESIGN C.ROHDE
APPROVED BY J. HEINEMAN
DATE 4/13/2012

Robbins
www.TheRobbinsCompany.com

1002833

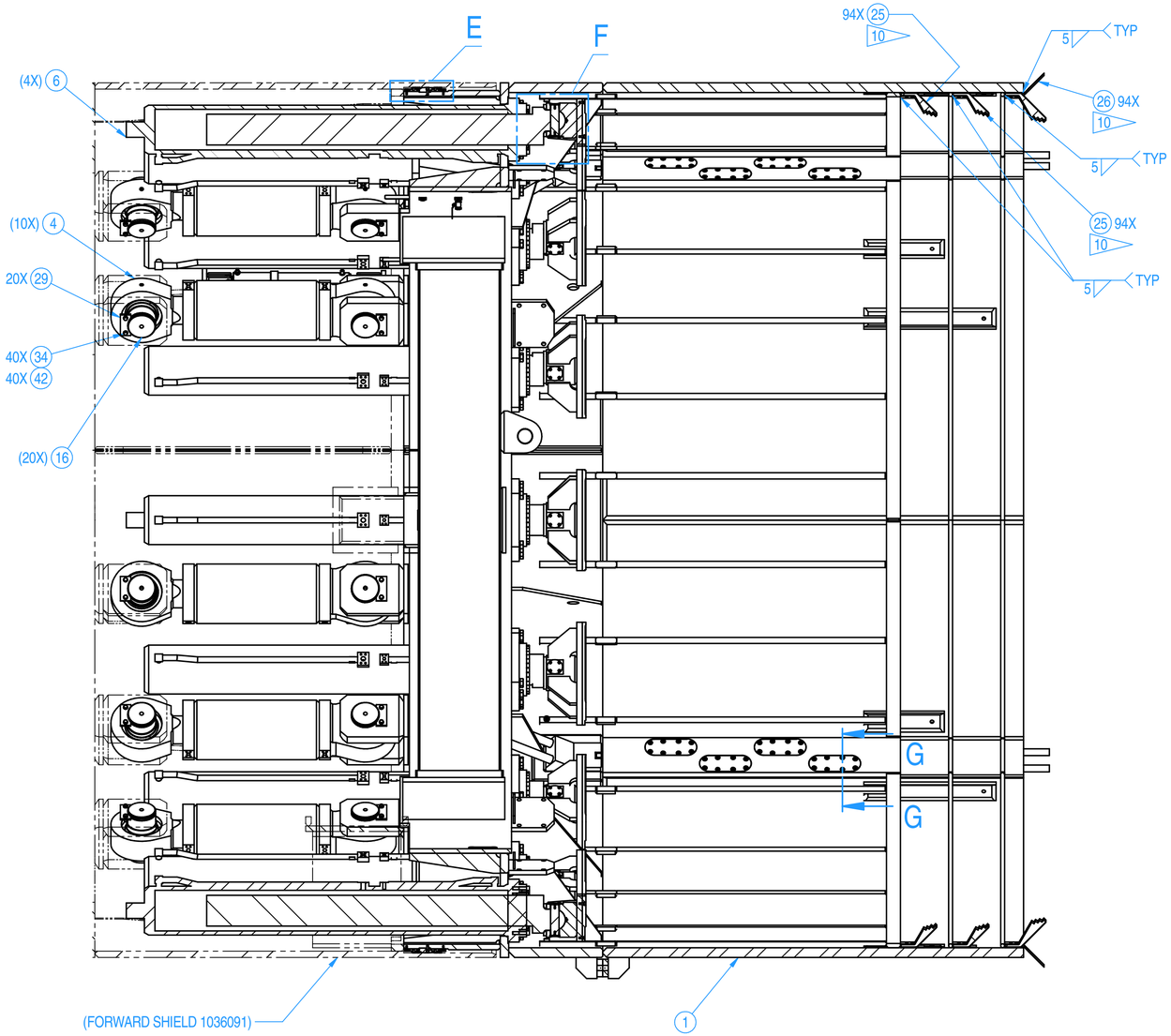

SECTION B-B
1:20
FROM SHT 1

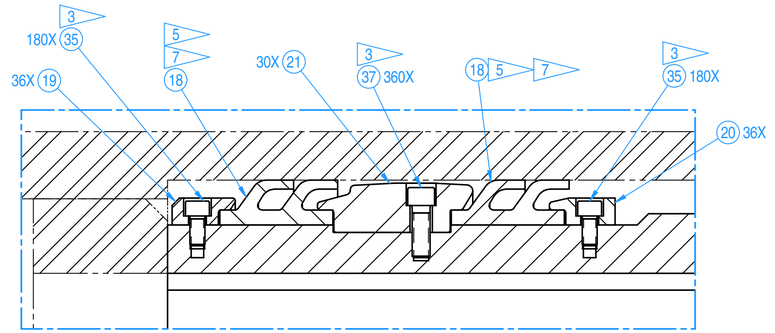

DETAIL E
1:2

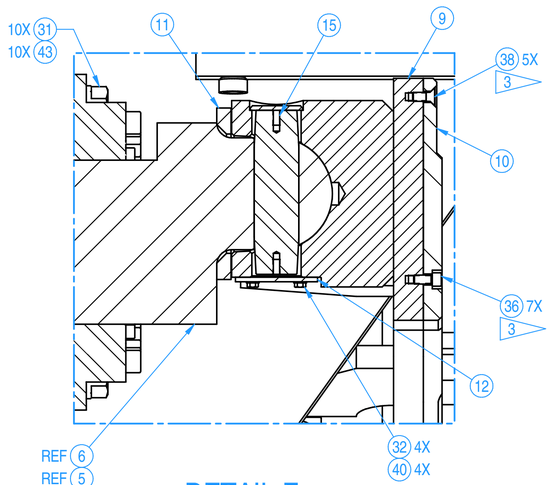

DETAIL F
1:4
TYP 16 PLACES
THRUST CYLINDERS 5 & 6

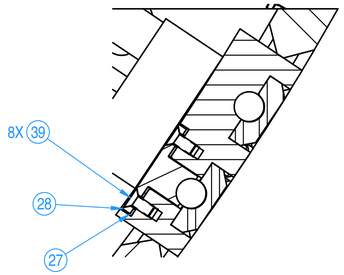

SECTION G-G
1:4
TYP 16 PLACES

PROPRIETARY NOTICE
The information disclosed herein, is the sole property of The Robbins Company and is not to be disclosed to a third party, copied or duplicated in full or part, used by, or disclosed to any person for any purpose without the written permission of The Company. By accepting this information, recipient agrees to use the information for the purpose specified by The Company and to abandon to the conditions. This material is on loan only, and upon request is to be returned to The Company.

MACHINE	NEXT ASSY
EPB2016-376	1002830
EPB2016-377	

UNLESS NOTED ALL DIMS ARE mm
TOLERANCES UNLESS NOTED

0-300	±.5	X	±1.2
300-1500	±3	X.X	±1.0
1500-6000	±6	X.XX	±.40
6000+	±12	X.XXX	±.100
THIRD ANGLE PROJECTION		ANGLES	±1°
		SURFACE FINISH	125

DIMENSIONS IN () ARE REF.
ALL GEOMETRIC DIMENSIONING & TOLERANCING PER ANSI Y14.5-2009

REV	DESCRIPTION	REVD BY DATE	APPD BY DATE

TITLE: REAR SHIELD ASSEMBLY

SIZE D | DWG No. 1002833 | REV 0 | SHT 2 OF 3 | SCALE SEE DETAIL | DO NOT SCALE

DRAWN BY: J.SPRAGUE
DATE: 3/23/2012
CHECKED STANDARDS: C.ROHDE
CHECKED DESIGN: C.ROHDE
WEIGHT TOTAL: 116453.0 kg
APPROVED BY: J. HEINEMAN
DATE: 4/13/2012

Robbins
www.TheRobbinsCompany.com

1002833

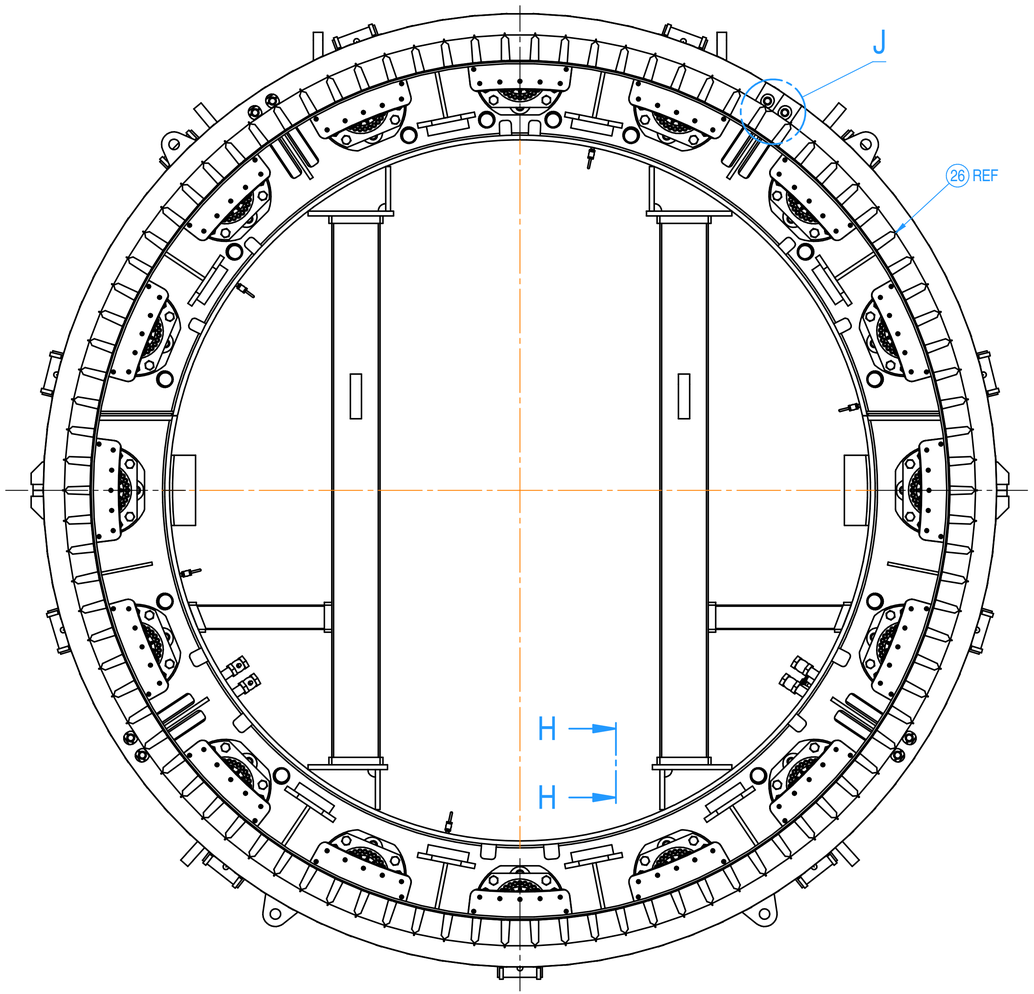

TRC P/N 1002833
REAR SHIELD ASSEMBLY
LOOKING FORWARD
1:20

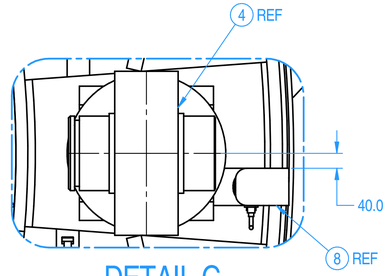

DETAIL C
1:8
FROM SHT 1
TYP 10 PLACES
VIEW ROTATED

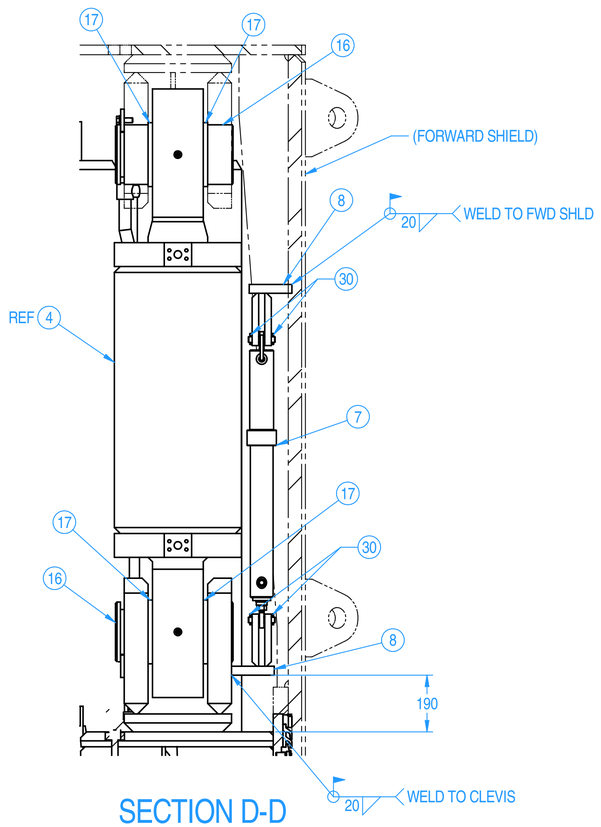

SECTION D-D
1:10
FROM SHT 1
TYP 10 PLACES
VIEW ROTATED

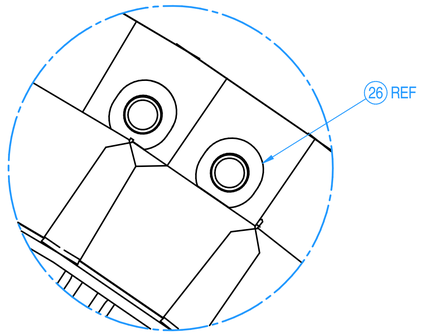

DETAIL J
1:4
MODIFIY REAR TAIL SEALS TO ALLOW
GROUT PIPES TO PASS. CUTOUT MUST ALLOW
RESTRICTOR PLATE TO BE DEFLECTED
TO THE SHIELD DIAMETER.
TYPICAL 4 PLACES

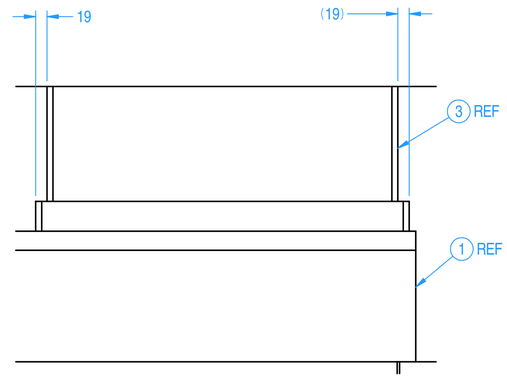

SECTION H-H
1:5
TYP 2 PLACES

PROPRIETARY NOTICE
This information disclosed herein, is the sole property of The Robbins Company and is considered confidential. It shall not be duplicated in full or part, used by or disclosed to any Company or person for any purpose except as authorized by the Company. By accepting this information, recipient agrees to hold it in confidence and to return it upon request. Failure to abide by the conditions of this notice may subject the user to civil and criminal liability.

MACHINE	NEXT ASSY
EPB2016-376	1002830
EPB2016-377	

UNLESS NOTED ALL DIMS ARE mm
TOLERANCES UNLESS NOTED

0-300	±.5	X	±1.0
300-1500	±.3	X.X	±.1
1500-6000	±.6	X.XX	±.40
6000+	±.12	X.XXX	±.100
		ANGLES	±1°
		SURFACE FINISH	125

MACHINE REALIZATION
DIMENSIONS IN( ) ARE REF.
ALL GEOMETRIC DIMENSIONING & TOLERANCING PER ANSI Y14.5-2009

REV	DESCRIPTION	REVD BY/ DATE	APPD BY/ DATE

TITLE: REAR SHIELD ASSEMBLY

SIZE	DWG No.	REV	SHT	SCALE
D	1002833	0	3 of 3	SEE DETAIL

DO NOT SCALE

DRAWN BY J.SPRAGUE	DATE 3/23/2012	CHECKED STANDARDS C.ROHDE
WEIGHT TOTAL 116453.0 kg		CHECKED DESIGN C.ROHDE
		APPROVED BY J. HEINEMAN
		DATE 4/13/2012

Robbins
www.TheRobbinsCompany.com

1002833

-Maximum contact pressure under full thrust=2466psi (accounting for segment and gasket reliefs on the ID and OD)

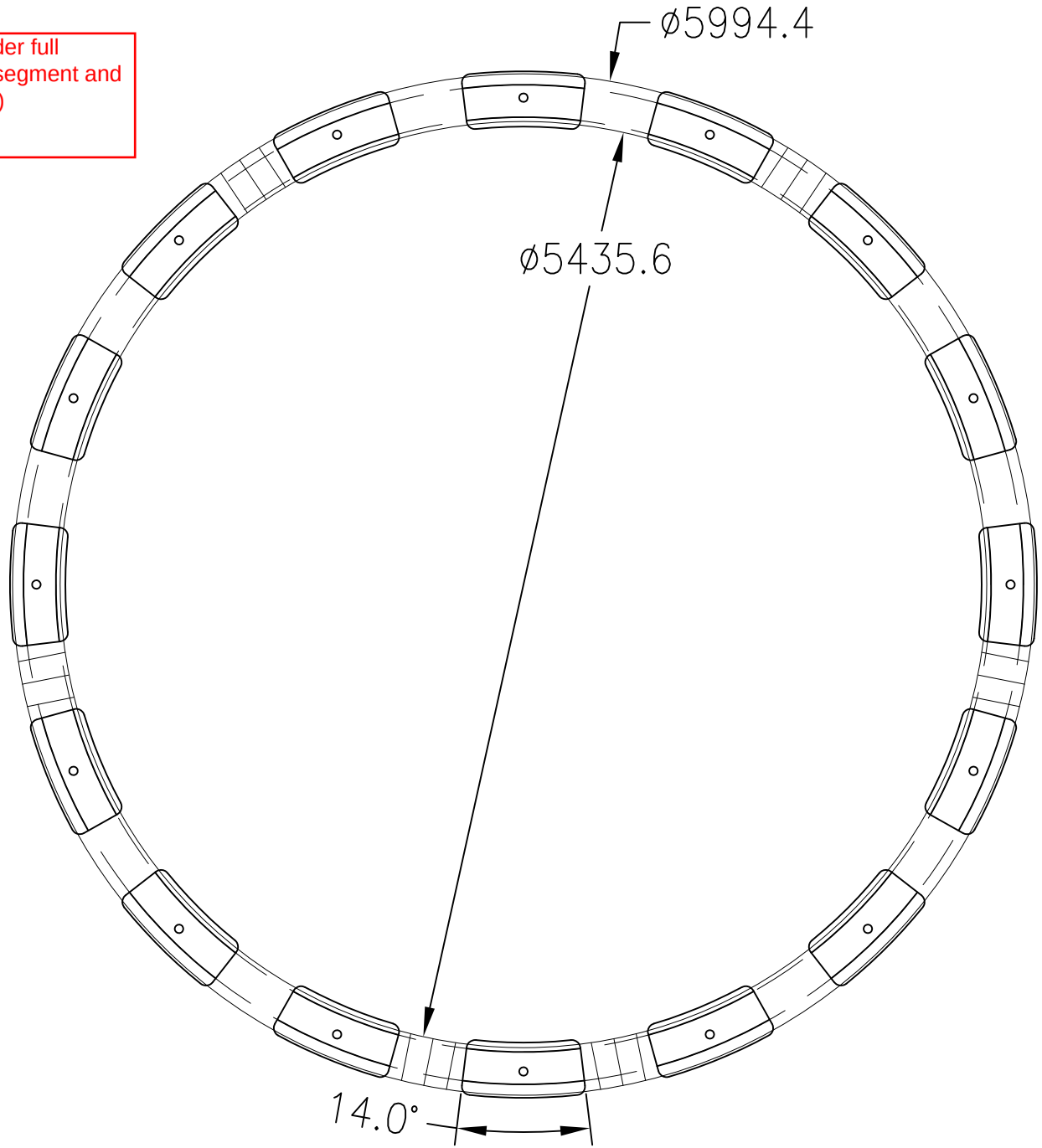

REQUIRED TORQUE CALCULATION

Submitted for:

San Francisco Central Subway

The Robbins Company - 29100 Hall Street, Solon, OH 44139 USA T: +1-440-248-3303 F: +1-440-248-1702
Solon, OH ● Kent, WA ● Oak Hill, WV ● China ● India ● Germany ● Spain ● Italy ● Mexico ● Hong Kong ● Romania

Torque Calculations

Solving for required torque on the cutter head takes into the cutter head and outside conditions of the soil. We are assuming that all mechanical losses in the rotation of the cutter head are negligible, in practice this value of mechanical loss is less than 2% of total torque required. This is more than made up for in the safety factor. In the field empirical formulas can also be used to estimate required torque based on machine size. This formula has been tested but solving for the required torque is also necessary to provide evidence of sufficient torque. The calculation factors that will be computed are shown below. This is the process that will be used to calculate the total torque required.

Calculation Method

$$T_{total} = T_1 + T_2 + T_3 + T_4 + T_5$$

$$T_1 = Torque\ from\ soil\ resistance\ inside\ and\ outside\ of\ cutterhead$$

$$T_2 = Torque\ from\ outer\ rim\ of\ the\ cutterhead$$

$$T_3 = Torque\ from\ cutting\ beams\ inside\ chamber$$

$$T_4 = Torque\ from\ mixing\ bars\ inside\ chamber$$

$$T_5 = Torque\ from\ soil\ shearing\ infront\ of\ TBM$$

Alpha Method of Estimating Torque

Based on research a method to estimate cutter head torque has been specified.

$$Torque = \alpha * D^3$$

$$D = Machine\ Diameter$$
$$\alpha = Parameter\ based\ on\ experience\ in\ shield\ tunneling\ industry$$

The Robbins Company - 29100 Hall Street, Solon, OH 44139 USA T: +1-440-248-3303 F: +1-440-248-1702
Solon, OH ● Kent, WA ● Oak Hill, WV ● China ● India ● Germany ● Spain ● Italy ● Mexico ● Hong Kong ● Romania

List of variables and coefficients

Machine Parameters

Excavation diameter (D1)	6.305m
Cutterhead outside diameter (D2)	6.235
Thickness of Cutter Head contacting non conditioned soil	0. 50 m
Opening Ratio	31%
Max cutterhead speed	4.5 rpm
Max advance Speed	100 mm/min

Ground Conditions

Unit Weight	23 kN/m3
Ko	0.6
Internal Angle of Friction	38 degrees
Cohesion	24 kN/m2
Horizontal Earth Pressure at Face	217 kN/m2
Vertical Earth Pressure (crown)	290 kN/m2
Average Earth Pressure Acting on Shield Body	272 kN/m2
Friction Coefficient (Soil conditioned – cutter head)	0.1
Friction Coefficient (Unconditioned soil – cutter rim)	0.3
Active Earth Pressure	0.3
Shear Strength w/o Additives (sWO) $=c+\sigma\tan(38)$	251 kN/m2
Shear Strength with Additives (sADD) $=c+\sigma\tan(12)$	86 kN/m2

The Robbins Company - 29100 Hall Street, Solon, OH 44139 USA T: +1-440-248-3303 F: +1-440-248-1702
Solon, OH ● Kent, WA ● Oak Hill, WV ● China ● India ● Germany ● Spain ● Italy ● Mexico ● Hong Kong ● Romania

T1- Front Face and Rear Face Frictional Torque

The forces acting upon the cutting face when rotating are the soil pressures on the front and back of the cutting face. The calculation for required torque takes into account the soil pressure, friction from the soil, and the opening ratio of the cutting face. This will give the force acting along the entire area of the cutter head. Solving for the torque required in this condition requires integrating the resultant soil frictional force over the area of the cutter face. The calculations below show the steps in obtaining the soil pressure for each side of the cutter head. Figure 1 shows the forces acting upon the face. The forces acting inside and outside of the chamber vary only with the change in diameter and opening ratios that are observed in each condition. These can be taken from the cutter head design and calculated separately if needed. In current calculation it is presently multiplied by two to achieve total torque from this condition.

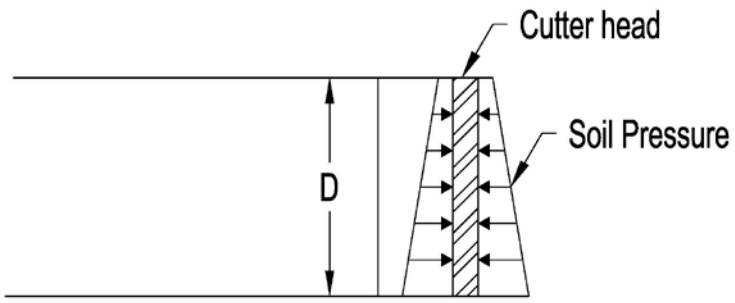

Figure 1 Earth pressures acting on cutting face

$$T_1 = \mu * \ 2 * (1 - Opening\ Ratio) * Horizontal\ Earth\ Pressure * \int_0^R 2\pi R^2\, dr$$

$$Horizontal\ Earth\ Pressure\ = Ka\left(\gamma * 2D + \gamma * \frac{D}{2}\right) = 217\,\frac{kn}{m^2}$$

$$T_1 = 0.1 * 2 * \ (1 - .31) * 217\,\frac{kN}{m2} * \frac{2\pi}{3} * 3.15m^3$$

$$T_1 = \ 1961\ \ kN - m$$

The Robbins Company - 29100 Hall Street, Solon, OH 44139 USA T: +1-440-248-3303 F: +1-440-248-1702
Solon, OH ● Kent, WA ● Oak Hill, WV ● China ● India ● Germany ● Spain ● Italy ● Mexico ● Hong Kong ● Romania

T2- Outer Rim Cutter Head Torque

This is applied to the cutter head as it rotates and is resisted by the soil pressure acting against it. The resistance is caused by dynamic friction between the rotating cutter head and the soil interface. Figure 2 shows a diagram of the forces creating this torque.

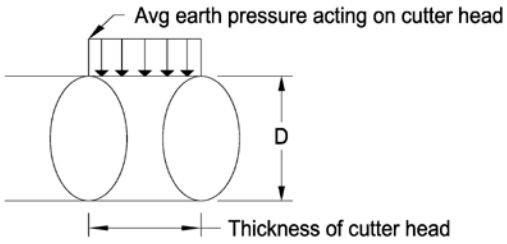

Figure 2 Forces acting on cutter head body

$$T_2 = Cutterhead\ Area * Moment\ Arm * P_{avg} * \mu_2$$

$$T_2 = (2\pi R_2 * L) * (R_2) * (P_{avg} * \mu_2)$$

$$T_2 = 31.2\ m^3 * 81.6 \frac{kN}{m^2}$$

$$T_2 = 2544\ kN - m$$

T3- Torque from Mixing Beam

The soil mixture inside the chamber will not only act against the back of the cutter head but it will act also on the mixing beam and mixing bars located inside the excavation chamber. This torque will be created from the shear strength of the soil after conditioning. This strength is different due to the conditioning of the soil mixture, making a more fluid muck. The torque is calculated as follows.

$$Torque = Shear\ Strength\ (sADD) * (r_{mixing\ beams} * A_{mixing\ beam} * N_{mixing\ beams})$$

$$T_3 = sAdd * (1.5\ m * 0.25m2 * 8)$$

$$T_3 = 258\ kN - m$$

The Robbins Company - 29100 Hall Street, Solon, OH 44139 USA T: +1-440-248-3303 F: +1-440-248-1702
Solon, OH ● Kent, WA ● Oak Hill, WV ● China ● India ● Germany ● Spain ● Italy ● Mexico ● Hong Kong ● Romania

T4- Torque from Mixing Bars

As noted above there will be resistance to turning caused by the mixing bars inside the excavation chamber. This will be a result of the soil mixture in the excavation chamber working against the mixing bars. The estimate of the torque created is shown below. Note that mixing bars located at different locations are taken into account and summed before torque is calculated.

$$Torque\ = Shear\ Strength\ (sADD) * \sum_{i=1}^{i=n} r_{n-mixing\ bar} * A_{n-mixing\ bar} *\ N_{n-mixing\ bars}$$

$$T_4 = 86\frac{kN}{m^2} * (2.3m * 0.09m^2 * 2)$$

$$T_4 =\ 36\ kN - m$$

T5- Torque from Soil Cutting

In order to spin the cutter head the soil in contact with the cutters will have to be overcome. This resistance will occur all along the radius of the cutter head and can be estimated roughly using the shear strength of the material and the penetration of the cutting tools.

$$T_5\ = Soil\ Strengh\ (sWO) * Penetration * 2\pi \int_0^R Rdr$$

$$T_5\ = 251\frac{kN}{m^2} * (\frac{V(advance)}{RPM}) * \pi r^2$$

$$T_5 =\ 174\ kN - m$$

The Robbins Company - 29100 Hall Street, Solon, OH 44139 USA T: +1-440-248-3303 F: +1-440-248-1702
Solon, OH ● Kent, WA ● Oak Hill, WV ● China ● India ● Germany ● Spain ● Italy ● Mexico ● Hong Kong ● Romania

Total Torque

Now that all the factors affecting the cutter head rotation have been solved for we are able to sum the values previously recorded to gain the total torque required to operate the cutter head.

$$T_{total} = T_1 + T_2 + T_3 + T_4 + T_5$$

$$T_1 = 1961\ kN - m$$

$$T_2 = 2544\ kN - m$$

$$T_3 = 258\ kN - m$$

$$T_4 = 38\ kN - m$$

$$T_5 = 174\ kN - m$$

$$\boldsymbol{T_{total} = 4972\ kN - m}$$

Empirical Method and Safety Check

$$Torque = \alpha * D^3$$

$$\alpha = 20 - 25\ depending\ on\ amount\ of\ soil\ conditioning, contractor\ experience, ect.$$

$$\alpha = 21$$

$$Torque = 5767\ kN - m$$

$$T_{total} = 4972\ kN - m < 5767\ T_{empirical} < 5830\ T_{equipped} \quad - - - \quad \text{Check = GOOD}$$

Factor of Safety

$$FS = \frac{T_{equipped}}{T_{total}} = \frac{5830}{4972} = 1.17$$

The Robbins Company - 29100 Hall Street, Solon, OH 44139 USA T: +1-440-248-3303 F: +1-440-248-1702
Solon, OH ● Kent, WA ● Oak Hill, WV ● China ● India ● Germany ● Spain ● Italy ● Mexico ● Hong Kong ● Romania

CYLINDER SPECIFICATIONS:

1. BORE: ∅290mm (11.42") WITH .8 FINISH.
2. ROD: ∅220mm (8.66") WITH .4 FINISH.
3. STROKE: 2200mm (86.61").
4. RATED PRESSURE: 350 BAR (5076 PSI) FOR ROD AND BLIND ENDS.
5. TEST PRESSURE: 480 BAR (6960 PSI) FOR ROD AND BLIND ENDS. NO MATERIAL YIELDING OR SEAL DAMAGE AT TEST PRESSURE. OR SEAL DAMAGE ALLOWED.
6. DESIGN FACTOR 2:1 BASED ON MATERIAL YIELD AT WORKING PRESSURE.
7. SEE CYLINDER LOAD CASE FREE BODY DIAGRAM ON SHEET 2. ALL INDICATED SAFETY FACTORS FOR EACH LOAD MUST BE MET OR EXCEEDED.
8. ROD TO BE HEAT TREATED Rc 32-36 (SINGLE PASS). ROD SLIDING SURFACE TO BE 2 FOLD HARD CHROME PLATED 50-60 MICROMETERS (.002"-.0025") MIN THICKNESS.
9. CYLINDER TO BE PAINTED WITH ONE COAT OIL RESISITANT WHITE ENAMEL AFTER PRIMER UNDERCOAT PER RC 1856. VENDOR TO SUPPLY SPECIFICATION ON LOCALLY ACCESSIBLE PAINTS.
10. CYLINDER TO BE SHIPPED IN A CONDITION SUITABLE FOR STORAGE WITH STEEL PLUGS. PORTS TO BE O-RING, GASKET OR THREAD SEALANT SEALED.
11. MARK CYLINDER:
    THE ROBBINS CO.
    1035955
    350 BAR (5076 PSI)
12. EQUIVALENT ALTERNATE DESIGN DETAILS PERMITTED WITH ROBBINS ENGINEERING APPROVAL. VENDOR TO SUPPLY THE FOLLOWING FOR ROBBINS ENGINEERING APPROVAL WITHIN THREE WEEKS OF PLACEMENT OF ORDER AND PRIOR TO START OF MANUFACTURING: A) ELECTRONIC COPY OF DETAILED ASSEMBLY DRAWING CONTAINING MATERIALS, WELD JOINT CONFIGURATIONS AND DETAILED STRESS CALCULATIONS, B) PARTS LIST INCLUDING CYLINDER WEIGHT, AND SEAL AND WIPER OEM SPEC. C) DIMENSIONS AND METHOD OF PISTON AND GLAND LOCKING MUST BE CLEARLY SHOWN ON DRAWING.
13. ROD END SEAL GLAND MUST BE BOLTED TO THE CYLINDER BARREL. NO EXCEPTIONS ARE PERMITTED. SPLIT LOCK WASHERS ARE NOT PERMITTED.
14. ROD AND GLAND SEALS TO BE PARKER POLY PAK TYPE "B" OR EQUIVALENT. ROD END O-RINGS MUST HAVE SINGLE BACKUP RING. PISTON SEALS TO BE PARKER DEEP POLYPAK TYPE "D" OR EQUIVALENT. PISTON O-RINGS MUST HAVE DOUBLE BACKUP RINGS, CATALOG SHEETS FOR ALL PARTS TO BE INCLUDED WITH QUOTATION.
15. WIPER MUST BE REPLACEABLE WITHOUT DISASSEMBLY. SPLIT RETAINING RINGS REQUIRED WITH SPLIT LINES AT BOTTOM OF CYLINDER.
16. SEAL KIT TO INCLUDE ALL SEALS, O-RINGS, AND WIPERS. WEAR RINGS TO BE INCLUDED WHERE APPLICABLE.
17. ROD AND PISTON BEARINGS TO BE ALUMINUM BRONZE WELD OVERLAY 3.2mm (.125") MIN THICKNESS. NO EXCEPTIONS ARE PERMITTED. NO INCLUSIONS OR VOIDS IN BEARING SURFACES ARE PERMITTED.
18. ALL CAP SCREWS TO BE METRIC CLASS 10.9 UNLESS OTHERWISE NOTED. VENDOR TO INCLUDE SPECIFIC BOLT TORQUE VALUES ON THE APPROVAL DRAWING.
19. VIBRATION INDUCED AT MOUNTING ±5g (GRAVITY).
20. VENDOR TO SUPPLY TEST CERTIFICATION DOCUMENTS FOR ROBBINS ENGINEERING APPROVAL.
21. PISTON OUTER CORNER MUST BE RELIEVED TO ALLOW BARREL SHRINKAGE TO WELDING.
22. PISTON MUST BE BOLTED TO THE ROD. ALL INTERNAL SCREWS MUST BE WIRE LOCKED. CLASS 12.9 SOCKET HEAD CAP SCREWS ARE PERMITTED FOR CONNECTING PISTON TO ROD ONLY. NO OTHER EXCEPTIONS ARE PERMITTED.
23. STOP TUBE MUST BE FLOATING WITH WEAR BANDS AT EACH END.
24. PROTECT UNPAINTED AND MACHINED SURFACES BY APPLYING CORETEC VpCI-391.
25. VENDOR MUST TAKE PRECAUTIONS TO AVOID HYDROGEN EMBRITTLEMENT, ESPECIALLY IF USING STEEL WITH CARBON CONTENT >0.3%

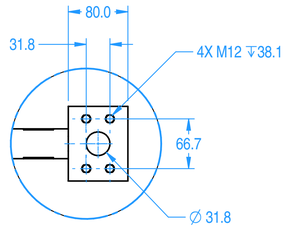

DETAIL B

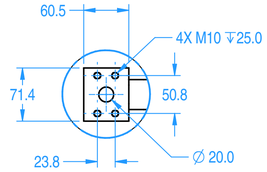

DETAIL A

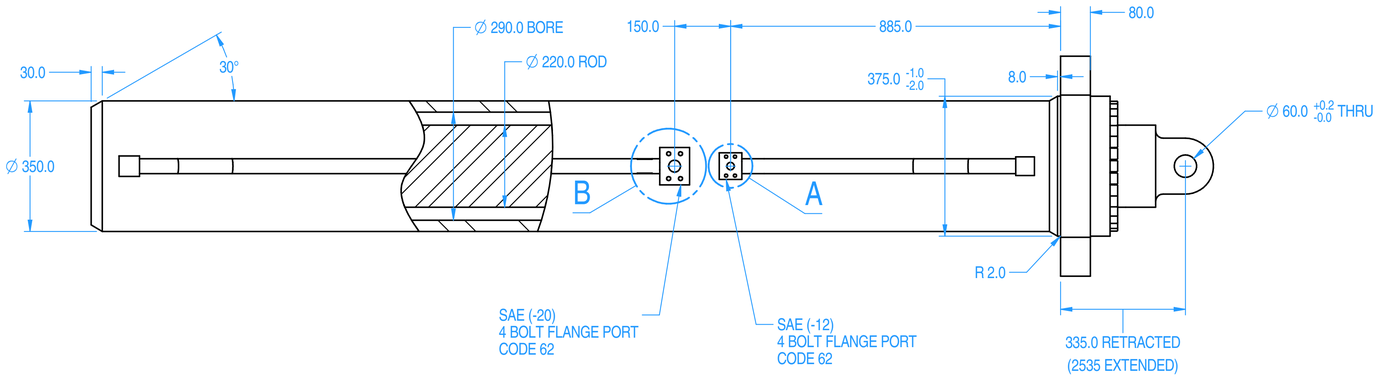

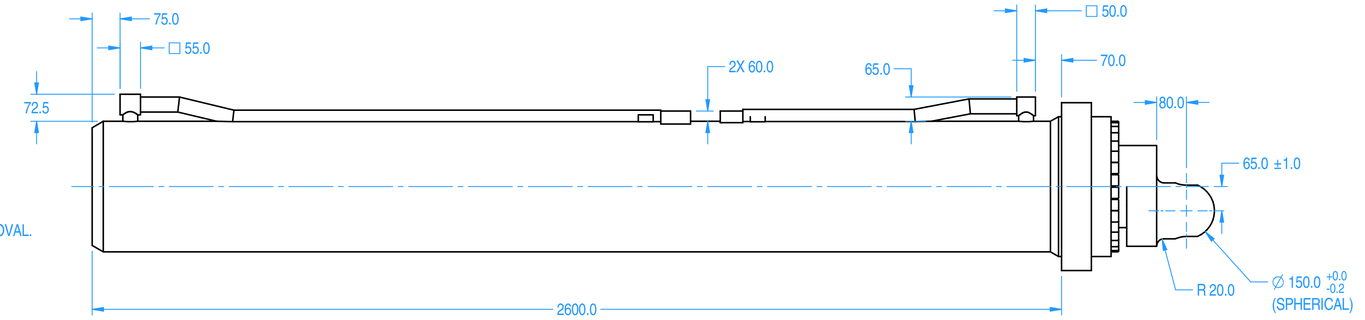

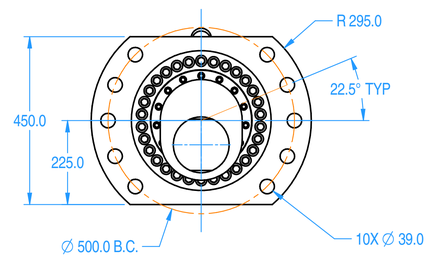

TRC P/N 1035955
CYL THRST Ø290Bx220Rx2200S
1:8

MACHINE	EPB2016-376/377	NEXT ASSY	1002833
UNLESS NOTED ALL DIMS ARE mm			
TOLERANCES UNLESS NOTED			
0-300 ±1.5	X ±1.5		
300-1500 ±3	X.X ±1.0		
1500-6000 ±6	X.XX ±.40		
6000+ ±12	X.XXX ±.100		
FASTENING SYSTEMS	ANGLES ±1°		
	SURFACE FINISH 3.2		
DIMENSIONS (X) ARE REF			
ALL GEOMETRIC DIMENSIONING & TOLERANCING PER ANSI Y14.5M-1982 AS APPLICABLE.			

PROPRIETARY NOTICE
The information disclosed herein is the sole property of The Robbins Company, and remains their sole property. It shall not be duplicated in full or part, used or disclosed to others for any purpose without the written consent of The Robbins Company. By accepting this information, recipient agrees to abide in total accordance with the foregoing restrictions and agrees to the conditions. This material is on loan only, and is to be returned upon request to The Robbins Company.

TITLE: CYL THRST Ø290Bx220Rx2200S

SIZE	DWG No.	REV	SHT	SCALE
D	1035955	0	1/2	SEE DETAIL - DO NOT SCALE

DRAWN	CHECKED
R.FINE	J.HEINEMAN
DATE 1/4/2012	DATE 1/4/2012
THIRD ANGLE PROJECTION	APPROVED J. HEINEMAN
WEIGHT TOTAL 1771.1 kg	DATE 1/4/2012

Robbins

1035955

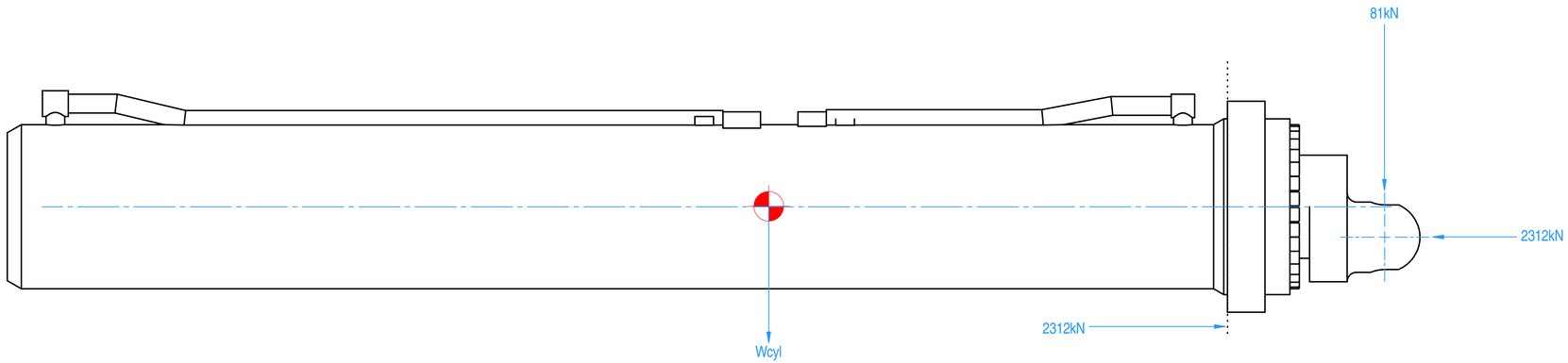

LOAD CASE, CYLINDER AT FULL STROKE
FACTOR OF SAFETY TO YIELD = 2:1

1035955

REV	DESCRIPTION	BY/DATE

PROPRIETARY NOTICE
The information disclosed hereon, is the sole property of The Robbins Company, and remains their sole property. It shall not be duplicated in full or part, used by or disclosed to any other party without prior written consent of The Robbins Company. By accepting this information, recipient agrees to abide in total with this notice, without any modification whatsoever to the conditions. This material is on loan only, and is to be returned upon request to The Robbins Company.

MACHINE	NEXT ASSY
EPB2016-376/ 377	1002833

UNLESS NOTED ALL DIMS ARE mm

TOLERANCES UNLESS NOTED

FAB (mm)		MACHINING (mm)	
0-300	±1.5	X	±1.5
300-1500	±3	X.X	±1.0
1500-6000	±6	X.XX	±.40
6000+	±12	X.XXX	±.100
		ANGLES	±1°
		SURFACE FINISH	3.2

DIMENSIONS (X) ARE REF

ALL GEOMETRIC DIMENSIONING & TOLERANCING PER ANSI Y14.5M-1982 AS APPLICABLE.

TITLE: CYL THRST Ø290Bx220Rx2200S

SIZE	DWG No.	REV	SHT	SCALE
D	1035955	0	2 OF 2	SEE DETAIL - DO NOT SCALE

Robbins

DRAWN	CHECKED
R.FINE	J.HEINEMAN
DATE 1/4/2012	DATE 1/4/2012
THIRD ANGLE PROJECTION	APPROVED J. HEINEMAN
WEIGHT TOTAL: 1771.1 kg	DATE 1/4/2012

www.TheRobbinsCompany.com

CYLINDER SPECIFICATIONS:

1. BORE: ∅290mm (11.42") WITH .8 FINISH.
2. ROD: ∅220mm (8.66") WITH .4 FINISH.
3. STROKE: 2200mm (86.61").
4. RATED PRESSURE: 350 BAR (5076 PSI) FOR ROD AND BLIND ENDS.
5. TEST PRESSURE: 480 BAR (6960 PSI) FOR ROD AND BLIND ENDS. NO MATERIAL YIELDING OR SEAL DAMAGE AT TEST PRESSURE. OR SEAL DAMAGE ALLOWED.
6. DESIGN FACTOR 2:1 BASED ON MATERIAL YIELD AT WORKING PRESSURE.
7. SEE CYLINDER LOAD CASE FREE BODY DIAGRAM ON SHEET 2. ALL INDICATED SAFETY FACTORS FOR EACH LOAD MUST BE MET OR EXCEEDED.
8. ROD TO BE HEAT TREATED Rc 32-36 (SINGLE PASS). ROD SLIDING SURFACE TO BE 2 FOLD HARD CHROME PLATED 50-60 MICROMETERS (.002"-.0025") MIN THICKNESS.
9. CYLINDER TO BE PAINTED WITH ONE COAT OIL RESISITANT WHITE ENAMEL AFTER PRIMER UNDERCOAT PER RC 1856. VENDOR TO SUPPLY SPECIFICATION ON LOCALLY ACCESSIBLE PAINTS.
10. CYLINDER TO BE SHIPPED IN A CONDITION SUITABLE FOR STORAGE WITH STEEL PLUGS. PORTS TO BE O-RING, GASKET OR THREAD SEALANT SEALED.
11. MARK CYLINDER:
    THE ROBBINS CO.
    1036128
    350 BAR (5076 PSI)
12. EQUIVALENT ALTERNATE DESIGN DETAILS PERMITTED WITH ROBBINS ENGINEERING APPROVAL. VENDOR TO SUPPLY THE FOLLOWING FOR ROBBINS ENGINEERING APPROVAL WITHIN THREE WEEKS OF PLACEMENT OF ORDER AND PRIOR TO START OF MANUFACTURING: A) ELECTRONIC COPY OF DETAILED ASSEMBLY DRAWING CONTAINING MATERIALS, WELD JOINT CONFIGURATIONS AND DETAILED STRESS CALCULATIONS, B) PARTS LIST INCLUDING CYLINDER WEIGHT, AND SEAL AND WIPER OEM SPEC. C) DIMENSIONS AND METHOD OF PISTON AND GLAND LOCKING MUST BE CLEARLY SHOWN ON DRAWING.
13. ROD END SEAL GLAND MUST BE BOLTED TO THE CYLINDER BARREL. NO EXCEPTIONS ARE PERMITTED. SPLIT LOCK WASHERS ARE NOT PERMITTED.
14. ROD AND GLAND SEALS TO BE PARKER POLY PAK TYPE "B" OR EQUIVALENT. ROD END O-RINGS MUST HAVE SINGLE BACKUP RING. PISTON SEALS TO BE PARKER DEEP POLYPAK TYPE "D" OR EQUIVALENT. PISTON O-RINGS MUST HAVE DOUBLE BACKUP RINGS, CATALOG SHEETS FOR ALL PARTS TO BE INCLUDED WITH QUOTATION.
15. WIPER MUST BE REPLACEABLE WITHOUT DISASSEMBLY. SPLIT RETAINING RINGS REQUIRED WITH SPLIT LINES AT BOTTOM OF CYLINDER.
16. SEAL KIT TO INCLUDE ALL SEALS, O-RINGS, AND WIPERS. WEAR RINGS TO BE INCLUDED WHERE APPLICABLE.
17. ROD AND PISTON BEARINGS TO BE ALUMINUM BRONZE WELD OVERLAY 3.2mm (.125") MIN THICKNESS. NO EXCEPTIONS ARE PERMITTED. NO INCLUSIONS OR VOIDS IN BEARING SURFACES ARE PERMITTED.
18. ALL CAP SCREWS TO BE METRIC CLASS 10.9 UNLESS OTHERWISE NOTED. VENDOR TO INCLUDE SPECIFIC BOLT TORQUE VALUES ON THE APPROVAL DRAWING.
19. VIBRATION INDUCED AT MOUNTING ±5g (GRAVITY).
20. VENDOR TO SUPPLY TEST CERTIFICATION DOCUMENTS FOR ROBBINS ENGINEERING APPROVAL.
21. PISTON OUTER CORNER MUST BE RELIEVED TO ALLOW BARREL SHRINKAGE TO WELDING.
22. PISTON MUST BE BOLTED TO THE ROD. ALL INTERNAL SCREWS MUST BE WIRE LOCKED. CLASS 12.9 SOCKET HEAD CAP SCREWS ARE PERMITTED FOR CONNECTING PISTON TO ROD ONLY. NO OTHER EXCEPTIONS ARE PERMITTED.
23. STOP TUBE MUST BE FLOATING WITH WEAR BANDS AT EACH END.
24. PROTECT UNPAINTED AND MACHINED SURFACES BY APPLYING CORETEC VpCI-391.
25. VENDOR MUST TAKE PRECAUTIONS TO AVOID HYDROGEN EMBRITTLEMENT, ESPECIALLY IF USING STEEL WITH CARBON CONTENT >0.3%

26 POSITION SENSOR WITH PROTECTIVE STEEL COVER, SUPPLIED BY VENDOR: 4-20mA OUTPUT OVER CALIBRATED STROKE LENGTH. DIRECT OUTPUT (NO EXTERNAL ELECTRONICS REQUIRED). VOLTAGE SUPPLY: 24 VDC.

- POSITION SENSOR P/N: TBD

- SENSOR PROTECTIVE COVER P/N: TBD

27 OUTPUT CONNECTION W/10 METER CABLE SUPPLIED BY VENDOR:

PIN:	COLOR:	FUNCTION:
1	GREY	4-20mA
2	PINK	PIN 1 RETURN
3	YELLOW	N.V.
4	GREEN	N.V.
5	RED OR BROWN	+24 VDC
6	WHITE	DC GROUND

- POSITION SENSOR CABLE P/N: TBD

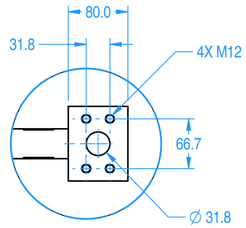

DETAIL B

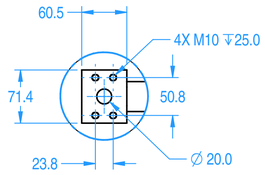

DETAIL A

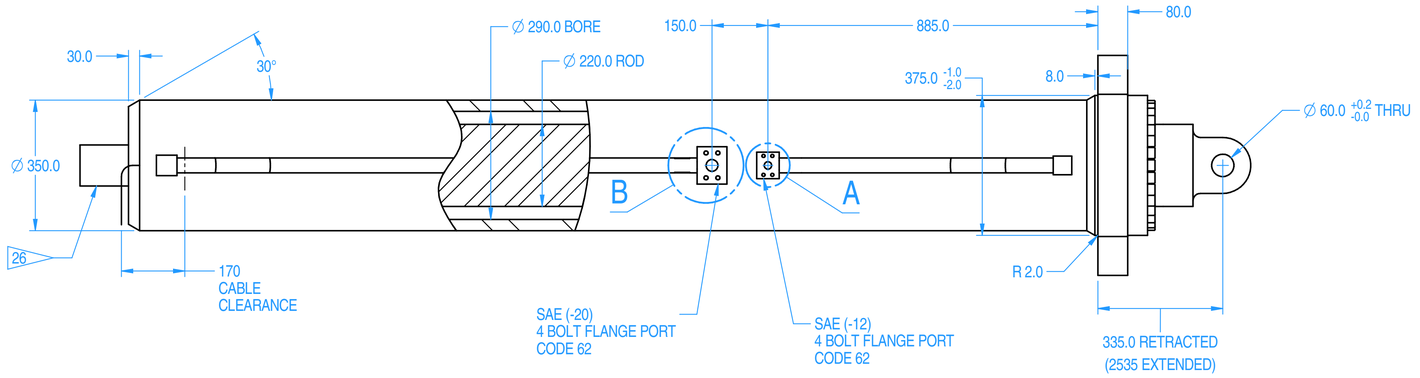

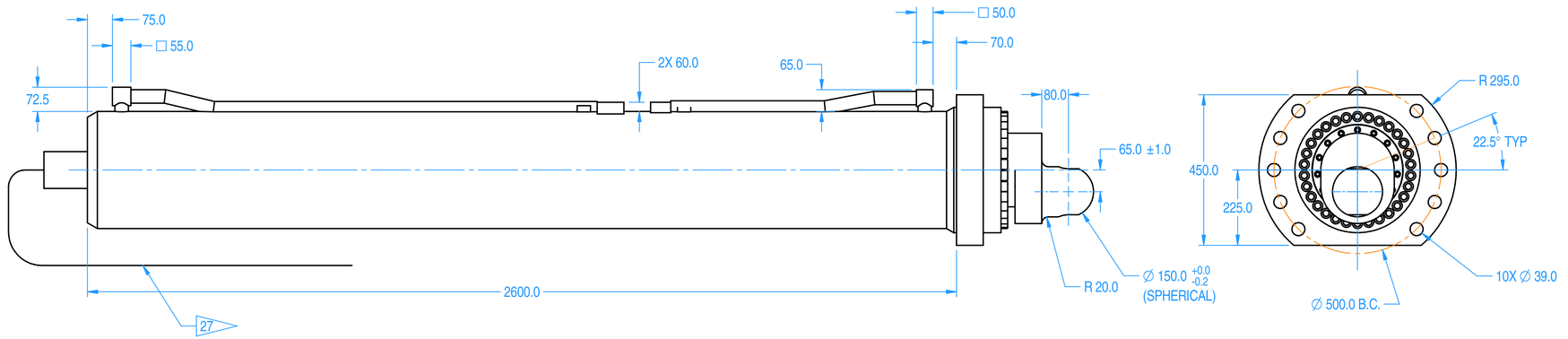

TRC P/N 1036128
CYL THRST W/SENSOR Ø290Bx220R
1:8

PROPRIETARY NOTICE
The information disclosed hereon is the sole property of The Robbins Company, and remains their sole property. It shall not be duplicated in full or part, used for manufacture or otherwise disclosed without the prior written consent of The Robbins Company. By accepting this information, recipient agrees to abide in total confidence and to use solely for the purpose intended under the conditions. This material is on loan only, and is to be returned upon request to The Robbins Company.

BY	DATE	DESCRIPTION	REV

MACHINE	NEXT ASSY
EPB2016-376	1002833
EPB2016-377	

UNLESS NOTED ALL DIMS ARE mm

TOLERANCES UNLESS NOTED

MACHINED PARTS		WELDMENTS	
0-300	±1.5	X	±1.5
300-1500	±3	X.X	±1.0
1500-6000	±6	X.XX	±.40
6000+	±12	X.XXX	±.100
		ANGLES	±1°
		SURFACE FINISH	3.2

DIMENSIONS (X) ARE REF

ALL GEOMETRIC DIMENSIONING & TOLERANCING PER ANSI Y14.5M-1982 AS APPLICABLE.

TITLE: CYL THRST W/SENSOR Ø290Bx220R

SIZE: D | DWG No.: 1036128 | REV: 0 | SHT 1 OF 2 | SCALE: SEE DETAIL - DO NOT SCALE

DRAWN: J.SPRAGUE 1/17/2012 | CHECKED: J.HEINEMAN 1/23/2012

THIRD ANGLE PROJECTION | APPROVED: J. HEINEMAN 1/24/2012

WEIGHT TOTAL: 1780.8 kg

Robbins

www.TheRobbinsCompany.com

1036128

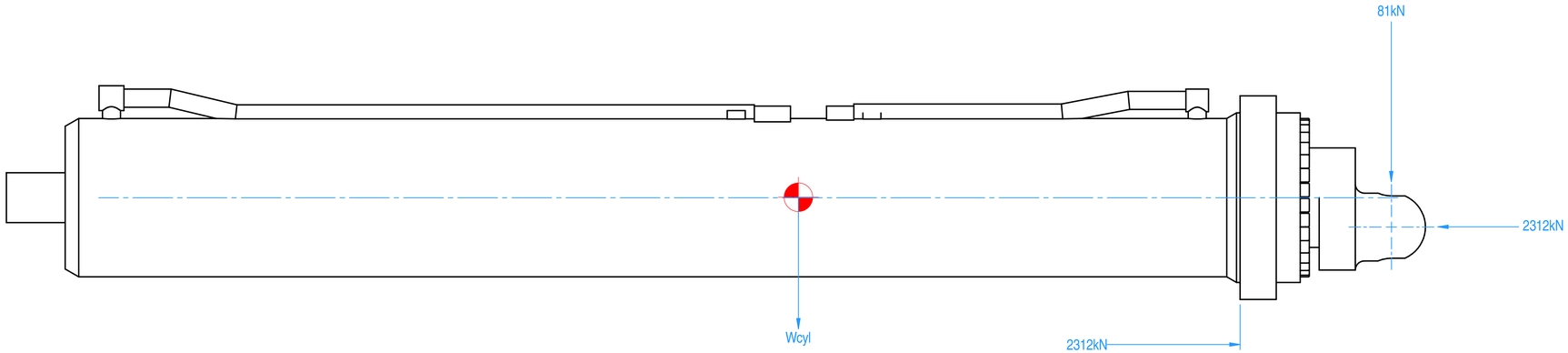

LOAD CASE, CYLINDER AT FULL STROKE
FACTOR OF SAFETY TO YIELD = 2:1

1036128

REV	DESCRIPTION	BY/ DATE

PROPRIETARY NOTICE
The information disclosed hereon is the sole property of The Robbins Company, and remains their sole property. It shall not be duplicated in full or part, used by or disclosed to any other party without prior written consent of The Robbins Company. By accepting this information, recipient agrees to abide in total with this notice, without any modification whatsoever to the conditions. This material is on loan only, and is to be returned upon request to The Robbins Company.

MACHINE	NEXT ASSY
EPB2016-376	1002833
EPB2016-377	

UNLESS NOTED ALL DIMS ARE mm

TOLERANCES UNLESS NOTED

FAB (mm)		MACHINING (mm)	
0-300	±1.5	X	±1.5
300-1500	±3	X.X	±1.0
1500-6000	±6	X.XX	±.40
6000+	±12	X.XXX	±.100
		ANGLES	±1°
		SURFACE FINISH	3.2

DIMENSIONS (X) ARE REF

ALL GEOMETRIC DIMENSIONING & TOLERANCING PER ANSI Y14.5M-1982 AS APPLICABLE.

TITLE
CYL THRST W/SENSOR Ø290Bx220R

SIZE	DWG No.	REV	SHT	SCALE:
D	1036128	0	2 OF 2	SEE DETAIL - DO NOT SCALE

Robbins

DRAWN	CHECKED
J.SPRAGUE	J.HEINEMAN
DATE 1/17/2012	DATE 1/23/2012
THIRD ANGLE PROJECTION	APPROVED J. HEINEMAN
WEIGHT TOTAL: 1780.8 kg	DATE 1/24/2012

www.TheRobbinsCompany.com

CYLINDER SPECIFICATIONS:

1. BORE: ∅330mm WITH 8 FINISH.
2. ROD: ∅200mm WITH 4 FINISH.
3. STROKE: 300mm.
4. RATED PRESSURE: 345 BAR (5000 PSI) PISTON END
5. TEST PRESSURE: 480 BAR (6960 PSI)
   NO MATERIAL YIELDING OR SEAL DAMAGE AT TEST PRESSURE.
   OR SEAL DAMAGE ALLOWED.
6. DESIGN FACTOR 2:1 BASED ON MATERIAL YIELD AT WORKING PRESSURE.
7. SEE CYLINDER LOAD CASE FREE BODY DIAGRAM ON SHEET 2. ALL INDICATED SAFETY FACTORS FOR EACH LOAD MUST BE MET OR EXCEEDED.
8. CYLINDER ROD AND EYE TO BE AN INTEGRAL FORGING OR MACHINING FROM BAR STOCK. WELD JOINT NOT PERMITTED. CAP END TO BE FORGED MACHINED OR FULL PENETRATION WELD. SHARP TRANSITIONS ARE NOT PERMITTED.
9. ROD TO BE HEAT TREATED Rc 32-36. ROD SLIDING SURFACE TO BE 3 LAYERS OF HARD CHROME. PLATING TO FOLLOW RC 1702, CHROMIUM PLATING ELECT. DEPOSITED TRIPLE LAYER.
10. CYLINDER TO BE PAINTED WITH ONE COAT OIL RESISITANT WHITE ENAMEL AFTER PRIMER UNDERCOAT PER RC 1856. VENDOR TO SUPPLY SPECIFICATION ON LOCALLY ACCESSIBLE PAINTS.
11. CYLINDER TO BE SHIPPED IN A CONDITION SUITABLE FOR STORAGE WITH STEEL PLUGS. PORTS TO BE O-RING, GASKET OR THREAD SEALANT SEALED.
12. MARK CYLINDER: THE ROBBINS CO.
    1047444
    345 BAR (5000 PSI) PISTON END
    207 BAR (3000 PSI) ROD END
13. EQUIVALENT ALTERNATE DESIGN DETAILS PERMITTED WITH ROBBINS ENGINEERING APPROVAL VENDOR TO SUPPLY DETAILED ASSEMBLY DRAWING CONTAINING MATERIALS, WELD JOINT CONFIGURATIONS, AND DETAILED STRESS CALCULATIONS FOR ROBBINS ENGINEERING APPROVAL WITHIN THREE WEEKS OF PLACEMENT OF ORDER AND PRIOR TO START OF MANUFACTURING.
14. VENDOR TO SUPPLY ASSEMBLY DRAWING AND PARTS INCLUDING CYLINDER WEIGHT, AND SEAL AND WIPER OEM SPEC. DIMENSIONS OF SPHERICAL BUSHING FITS AND METHOD OF PISTON AND GLAND LOCKING MUST BE CLEARLY SHOWN ON DRAWING.
15. ROD END SEAL GLAND MUST BE BOLTED TO THE CYLINDER BARREL. NO EXCEPTIONS ARE PERMITTED. SPLIT LOCK WASHERS ARE NOT PERMITTED.
16. HEAVY DUTY ROD WIPER AND SEALS.
17. WIPER MUST BE REPLACEABLE WITHOUT DISASSEMBLY. SPLIT RETAINING RINGS REQUIRED WITH SPLIT LINES AT BOTTOM OF CYLINDER.
18. CATALOG DATA SHEETS, TO BE INCLUDED WITH QUOTATION, SHOWING MANUFACTURER, TYPE AND CROSS SECTIONAL DIMENSIONS OF:
    A) PISTON AND ROD SEALS, B) ROD WIPER, C) BACK-UP RINGS (IF APPLICABLE).
19. SEAL KIT TO INCLUDE ALL SEALS, O-RINGS, AND WIPERS. WEAR RINGS TO BE INCLUDED WHERE APPLICABLE.
20. ROD AND PISTON BEARINGS TO BE ALUMINUM BRONZE WELD OVERLAY 3.2mm (.125") MIN THICKNESS. NO EXCEPTIONS ARE PERMITTED. NO ICNLUSIONS OR VOIDS IN BEARING SURFACES ARE PERMITTED.
21. ALL CAP SCREWS TO BE METRIC GRADE 10.9 UNLESS OTHERWISE NOTED. TORQUE PER ROPBBINS SPEC 5750 9900 17. VENDOR TO INCLUDE SPECIFIC BOLT TORQUE VALUES ON THE APPROVAL DRAWING.
22. VIBRATION INDUCED AT MOUNTING ±5g (GRAVITY).
23. VENDOR TO SUPPLY CALCULATIONS AND TEST CERTIFICATION DOCUMENTS FOR ROBBINS ENGINEERING APPROVAL.
24. PISTON OUTER CORNER MUST BE RELIEVED TO ALLOW BARREL SHRINKAGE TO WELDING.
25. PISTON MUST BE BOLTED TO THE ROD. ALL INTERNAL SCREWS MUST BE WIRE LOCKED. NO EXCEPTIONS ARE PERMITTED.
26. STOP TUBE MUST BE FLOATING.
27. PROTECT UNPAINTED AND MACHINED SURFACES BY APPLYING CORETEC VpCI-391.
28. ROD AND GLAND SEALS TO BE PARKER POLY PAK TYPE "B" OR EQUIVALENT. ROD END O-RINGS MUST HAVE SINGLE BACKUP RING. PISTON SEALS TO BE PARKER DEEP POLYPAK TYPE "D" OR EQUIVALENT. PISTON O-RINGS MUST HAVE DOUBLE BACKUP RINGS.
29. VENDOR MUST TAKE PRECAUTIONS TO AVOID HYDROGEN EMBRITTLEMENT, ESPECIALLY IF USING STEEL WITH CARBON CONTENT >0.3%.

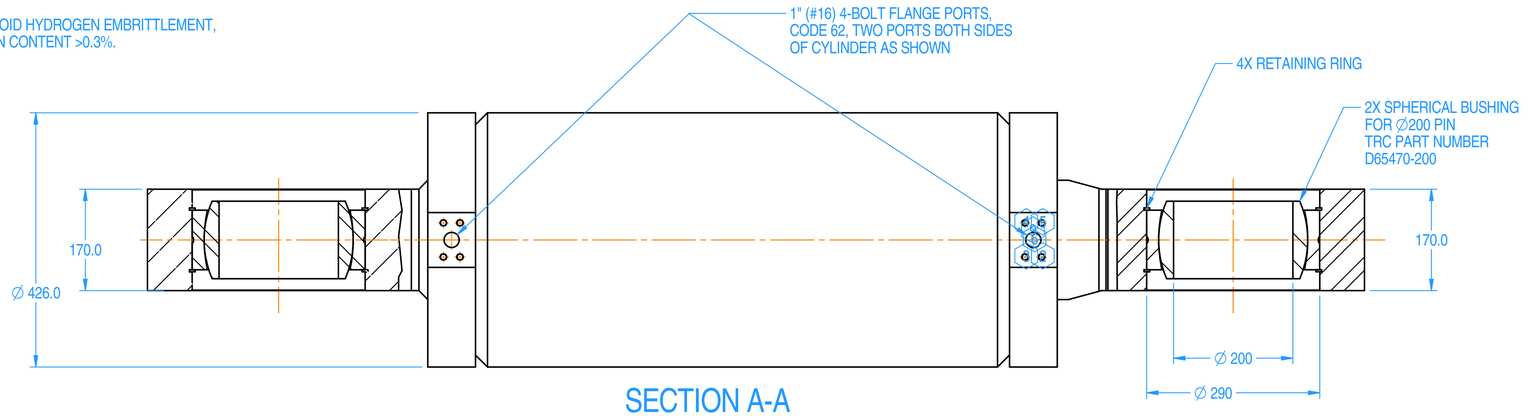

SECTION A-A

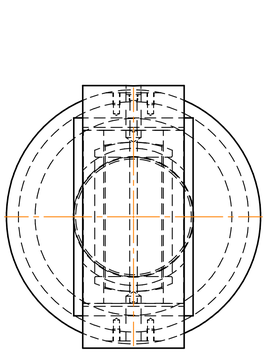

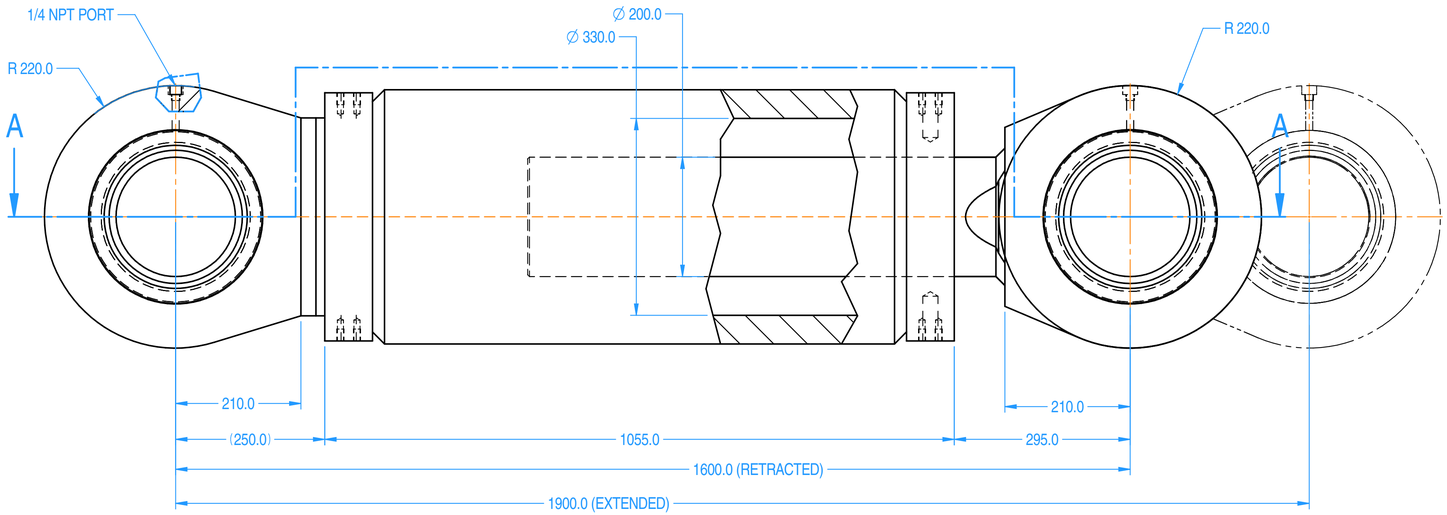

TRC P/N 1047444
CYLINDER, ARTICULATION
1:5

REV	DESCRIPTION	REVD BY: DATE	APPD BY: DATE

PROPRIETARY NOTICE
This document and the information disclosed herein, is the sole property of The Robbins Company. Any reproduction in part or as a whole without the written permission of The Robbins Company is prohibited. It shall not be duplicated in full or part, used by or disclosed to any Company. By accepting this information, recipient agrees to the above restrictions and to return this drawing upon request or whenever the purpose for which it was submitted has been accomplished.

MACHINE	NEXT ASSY
EPB2016-376	1002833
EPB2016-377	

UNLESS NOTED ALL DIMS ARE mm
TOLERANCES UNLESS NOTED

0-300	±.5	X	±1.0
300-1500	±3	X.X	±.1
1500-6000	±5	X.XX	±.02
6000+	±12	X.XXX	±.100
		ANGLES	±1°
		SURFACE FINISH	125

THIRD ANGLE PROJECTION
DIMENSIONS (X) ARE REF.
ALL GEOMETRIC DIMENSIONING & TOLERANCING PER ANSI Y14.5-2009

TITLE: CYLINDER, ARTICULATION

SIZE	DWG No.	REV	SHT.	SCALE
D	1047444	0	1 OF 2	SEE DETAIL

DO NOT SCALE

DRAWN BY	CHECKED STANDARDS
J.SPRAGUE	J.HEINEMAN
DATE 4/17/2012	CHECKED DESIGN J.HEINEMAN
WEIGHT TOTAL 1030.5 kg	APPROVED BY J.HEINEMAN
	DATE 4/19/2012

Robbins
www.TheRobbinsCompany.com

1047444

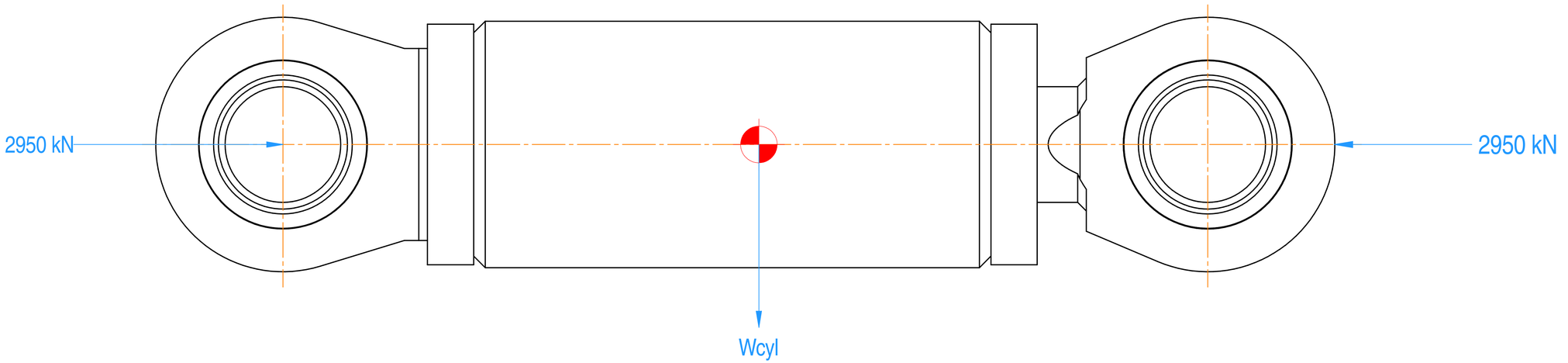

LOAD CASE, CYLINDER EXTENDING
FACTOR OF SAFETY TO YIELD = 2:1

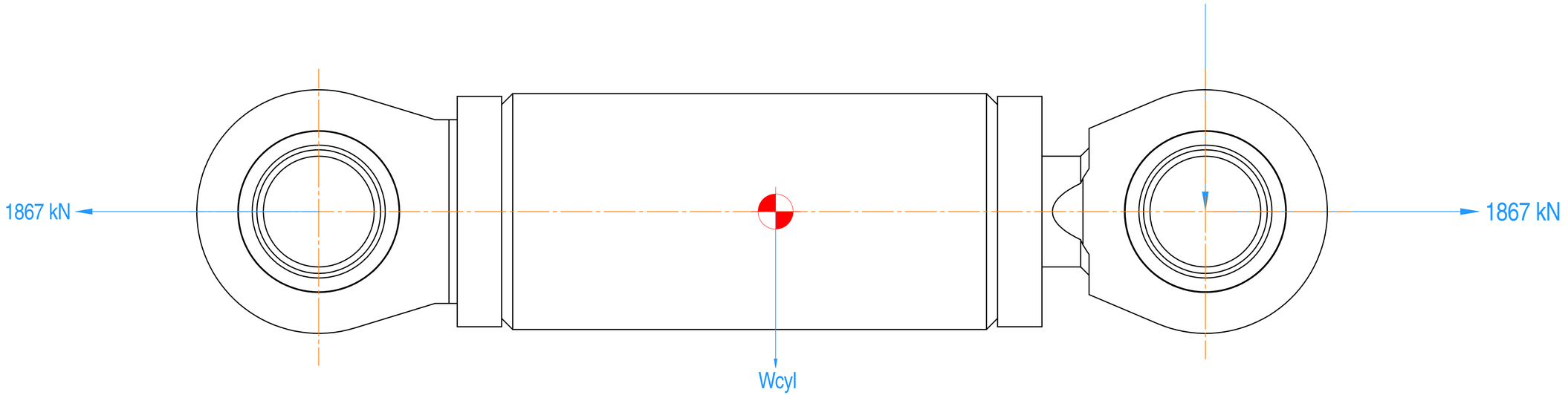

LOAD CASE, CYLINDER RETRACTING
FACTOR OF SAFETY TO YIELD = 2:1

1047444

MACHINE	NEXT ASSY
EPB2016-376	1002833
EPB2016-377	

UNLESS NOTED ALL DIMS ARE mm

TOLERANCES UNLESS NOTED

0-300	±1.5	X	±1.5
300-1500	±3	X.X	±1.0
1500-6000	±6	X.XX	±.40
6000+	±12	X.XXX	±.100
		ANGLES	±1°
		SURFACE	3.2
		FINISH	

THIRD ANGLE PROJECTION

DIMENSIONS (X) ARE REF.

ALL GEOMETRIC DIMENSIONING & TOLERANCING PER ANSI Y14.5-2009

PROPRIETARY NOTICE

The information disclosed herein is the sole property of The Robbins Company, and remains the sole property of it shall not be duplicated in full or part, used by or disclosed to any other party without prior written consent of The Robbins Company. By accepting this information, recipient agrees to make no trade with this information, without any modification whatsoever to the conditions. This material is on loan only, and is to be returned upon request to The Robbins Company.

REV	DESCRIPTION	REV'D BY DATE	APP'D BY DATE

TITLE: CYLINDER, ARTICULATION

SIZE: D | DWG No.: 1047444 | REV: 0 | SHT 2 OF 2 | SCALE: SEE DETAIL | DO NOT SCALE

DRAWN BY: J.SPRAGUE | DATE: 4/17/2012 | CHECKED STANDARDS: J.HEINEMAN | CHECKED DESIGN: J.HEINEMAN

WEIGHT TOTAL: 1030.5 kg | APPROVED BY: J.HEINEMAN | DATE: 4/19/2012

Robbins

www.TheRobbinsCompany.com

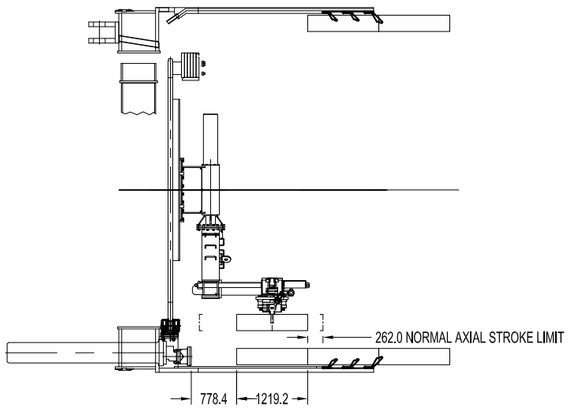

1. ERECT REMOVABLE SPACER IN NORMAL RING BUILD AREA.

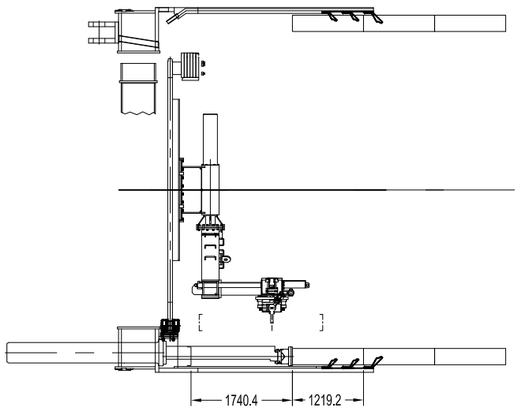

2. PUSH SPACER TO MAXIMUM 1740MM WITH THE THRUST CYLINDERS.

NOTE: 1740MM THRUST STROKE SHOULD NOT BE EXCEEDED, OR THE ERECTOR WILL NOT BE ABLE TO MOVE FAR ENOUGH AFT TO REMOVE THE SPACER AND BUILD THE NEW PERMANENT RING.

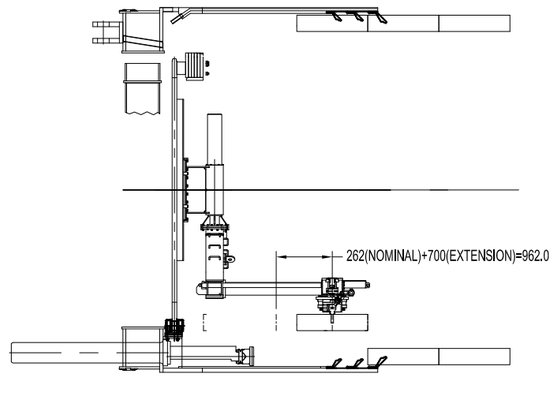

3. INSTALL 700MM ERECTOR EXTENSION AND REMOVE SPACER.

NOTE: TAIL SEALS SHOULD BE REPLACED IN SECTIONS SO THAT SOME THRUST CYLINDERS CAN REMAIN IN CONTACT WITH SPACERS AND/OR NEW SEGMENTS TO REACT THE FACE PRESSURE IN FRONT OF THE MACHINE..

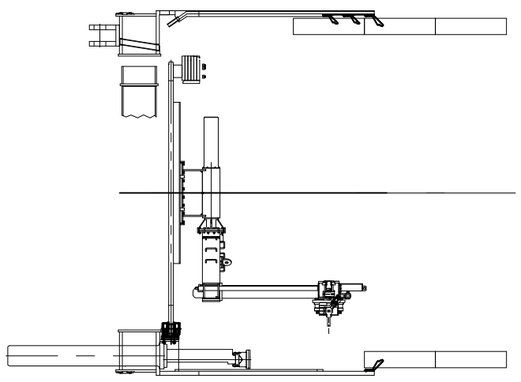

4. REPLACE FIRST TWO ROWS OF TAIL SEALS.

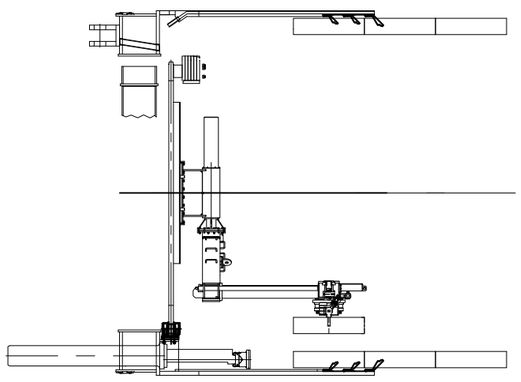

5. BUILD PERMANENT RING IN PLACE OF REMOVED SPACER.

PROPRIETARY NOTICE:
This information disclosure is the property of The Robbins Company, and remains that while presented, it shall not be used, loaned, copied or disclosed to any other party without prior written consent of The Robbins Company. Upon request, all copies will be returned to the person to whom this data is issued with this notice, without any modification.
Unpublished rights reserved under the copyright laws of the United States. This is an unpublished work and is to be returned upon request to The Robbins Company.

MACHINE	NEXT ASSY
EPB 2016-376/377	
UNLESS NOTED ALL DIMS ARE mm	

TOLERANCES UNLESS NOTED

FAB (mm)	0-300	± 1.5	X ± 1.5
	300-1500	± 3	X.X ± 1.0
	1500-6000	± 6	X.XX ± .40
	6000+	± 12	X.XXX ± .100
THRU HOLE PROJECTION		MACHINING (mm)	ANGLES ± 1°
			SURFACE FINISH 125

DIMENSIONS (X) ARE REFERENCE

ALL GEOMETRIC DIMENSIONING & TOLERANCING PER ANSI Y14.5-2009

REV	DESCRIPTION	REV'D BY / DATE	APP'D BY / DATE

TITLE: TAIL SEAL REPLACEMENT PROCEDURE

SIZE	DWG No.	REV	SHT	SCALE
D	1049141	0	1 OF 1	1:50

DO NOT SCALE

DRAWN BY	CHECKED STANDARDS
J.HEINEMAN	J.HEINEMAN
DATE 5/21/2012	CHECKED DESIGN J.HEINEMAN
WEIGHT TOTAL	APPROVED BY J.HEINEMAN
	DATE 5/21/2012

Robbins

www.TheRobbinsCompany.com

1049141

MODEL EPB2016-376/377
SECTION 10 • Screw Conveyor Assembly

1. Screw conveyor layout
2. Screw speed vs. thrust speed graph
3. Screw drive assembly
4. Bulkhead gate assembly
5. Screw casing

NOTES:

1. REMOVE ALL BURRS & BREAK SHARP EDGES.
2. ALL WELDING SHALL MEET THE REQUIREMENTS OF THE LATEST EDITION OF THE AWS STRUCTURAL WELDING CODE (D1.1/D1.1M). ALL SECTIONS AS APPLICABLE UNLESS OTHERWISE NOTED. USE E70XX LOW HYDROGEN ELECTRODES OR EQUIVALENT.
3. PAINT PER ROBBINS SPEC RC1852. MACHINED SURFACES NOT TO BE PAINTED, BUT PROTECTED BY OTHER SUITABLE METHODS.
4. TORQUE FASTENERS PER ROBBINS SPEC. 5750 9900 17, UNLESS OTHERWISE NOTED.

5 BOND O-RINGS AND SEALS INTO GROOVES WITH SILICONE SEALANT.

6 FILL SPACE BETWEEN SEALS WITH EPI GREASE PRIOR TO ASSEMBLY, PRIOR TO OPERATING SCREW SLIDE, AND PER GREASE SCHEDULE IN OPERATION AND MAINTENANCE MANUAL.

7 THOROUGHLY CLEAN SURFACES AND APPLY LOCTITE #242 TO THREADS AND TORQUE PER ROBBINS SPEC.

8 POSITION ITEM #23 AT ASSEMBLY BASED ON FULL RETRACTION AND EXTENSION OF THE SLIDE CYLINDERS.

QTY	PART No.	DESCRIPTION	DWG No.	WT. Total (kgs)	ITEM
123	A22154-88	NUT, M30 C10	A22154	30.3	44
2	1030773	PIN, Ø30x128mm	1030773	1.7	45
18	1030744	PIN, Ø34x70mm	1030744	12.5	46
1	1028871	PIN, Ø850.0mm x 298.0mm	1028871	2.3	47
2	1031316	VD SEAL	1031316	3.2	48
4	652-643	O-RING, SIZE 2-216		0.0	49
2	A111732-6035200	O-RING, Ø8mmx3520mm LG	A111732	0.4	50
1	A111732-6030480	O-RING,8mm x 3048mm LG	A111732	0.2	51
1	A111732-6034560	O-RING,8mm x 3456mm LG	A111732	0.2	52
2	A111732-6034230	O-RING,8mm x 3423mm LG	A111732	0.3	53
1	A111732-6033440	O_RING, Ø8mmx3344mm LG	A111732	0.2	54
2	A97366-13060	COTTER PIN, CHINESE, Ø10mmx60mm	A97366	0.1	55
2	1028872	CAP	1028872	0.8	56

QTY	PART No.	DESCRIPTION	DWG No.	WT. Total (kgs)	ITEM
1	1049422	SCREW - SCREW CONVEYOR	1031026	4637.7	1
1	1036607	BULKHEAD GATE ASSEMBLY	1036607	2833.4	2
1	1036119	CASING, MACHINING	1036119	1395.5	3
1	1036197	CASING, MACHINING	1036197	859.8	4
1	1036194	CASING, MACHINING	1036194	857.1	5
1	1036117	CASING. MACHINING	1036117	5288.6	6
1	1032910	CASING, MACHINING	1032910	1624.4	7
1	1036113	CASING, MACHINING	1036113	5831.7	8
1	D113280-1	GATE ASSEMBLY	D113280	749.6	9
1	2005514	SHFT SCW DR ASY 900mm MS50 2 MTR	2005514	5274.4	10
1	1049473	SLIDING SUPPORT WELDMENT	1049473	662.4	11
2	1051195	RETAINING PLATE	1051195	54.0	12
1	1051197	SLIDER PLATE	1051197	189.2	13
2	1051513	SIDE BRACE, WELDMENT	1051513	9.8	14
2	1051547	BUMPER BRACKET	1051547	16.6	15
2	1032241	CYL, Ø140xØ80Rx660S	1032241	416.9	16
1	1035141	INSPECTION HATCH	1035141	55.5	17
2	1051366	INSPECTION HATCH	1051366	688.1	18
2	1031676	INJ PORT ASSY, Ø51mm	1031676	25.6	19
1	1001252	BALL VALVE, 2" FLANGED	1001246	9.3	20
3	1001197	EARTH PRESS SNSR ASSEMBLY Ø86mm	1001197	10.2	21
2	1030104	KEY, SCREW CONVEYOR	1030104	7.2	22
2	5750000987	PROXIMITY SENSOR	5750000987	0.2	23
1	1051619	DOG PLATE ASSEMBLY	1051617	0.2	24
2	1051617	SENSOR BRACKET ASSEMBLY	1051617	0.4	25
2	1030111	MOUNTING BRACKET	1030111	4.7	26
2	1030110	MOUNTING BRACKET	1030110	0.3	27
1	1030105	UPPER LIMIT SWITCH COVER	1030105	4.5	28
1	1030106	LOWER LIMIT SWITCH COVER	1030106	1.9	29
4	1030738	COVER, Ø35, SCREW CONVEYOR	1030738	0.1	30
14	A22152-30205	HHCS, M10x20mm C8.8	A22152	0.3	31
4	A22152-30255	HHCS, M10x25mm C8.8	A22152	0.1	32
20	A22153-40509	SHCS, M12x50mm C12.9	A22153	1.3	33
4	A22153-50605	SHCS, M16x60mm G8.8	A22153	0.6	34
32	A22152-60605	HHCS, M20x60mm C8.8	A22152	7.2	35
80	A22151-60908	HHCS, M20x90mm C10.9	A22151	23.8	36
27	A22152-81108	HHCS, M30x110mm C10.9	A22152	23.6	37
96	A22151-81208	HHCS, M30x120mm C10.9	A22151	89.3	38
22	A22158-3	WASHER, HD NW OD M10	A22158	0.1	39
112	A22158-6	WASHER, HD NW OD M20	A22158	2.6	40
123	A22158-8	WASHER, HD NW OD M30	A22158	8.2	41
4	A22154-35	NUT, M10 C8	A22154	0.0	42
80	A22154-68	NUT, M20 C10	A22154	5.4	43

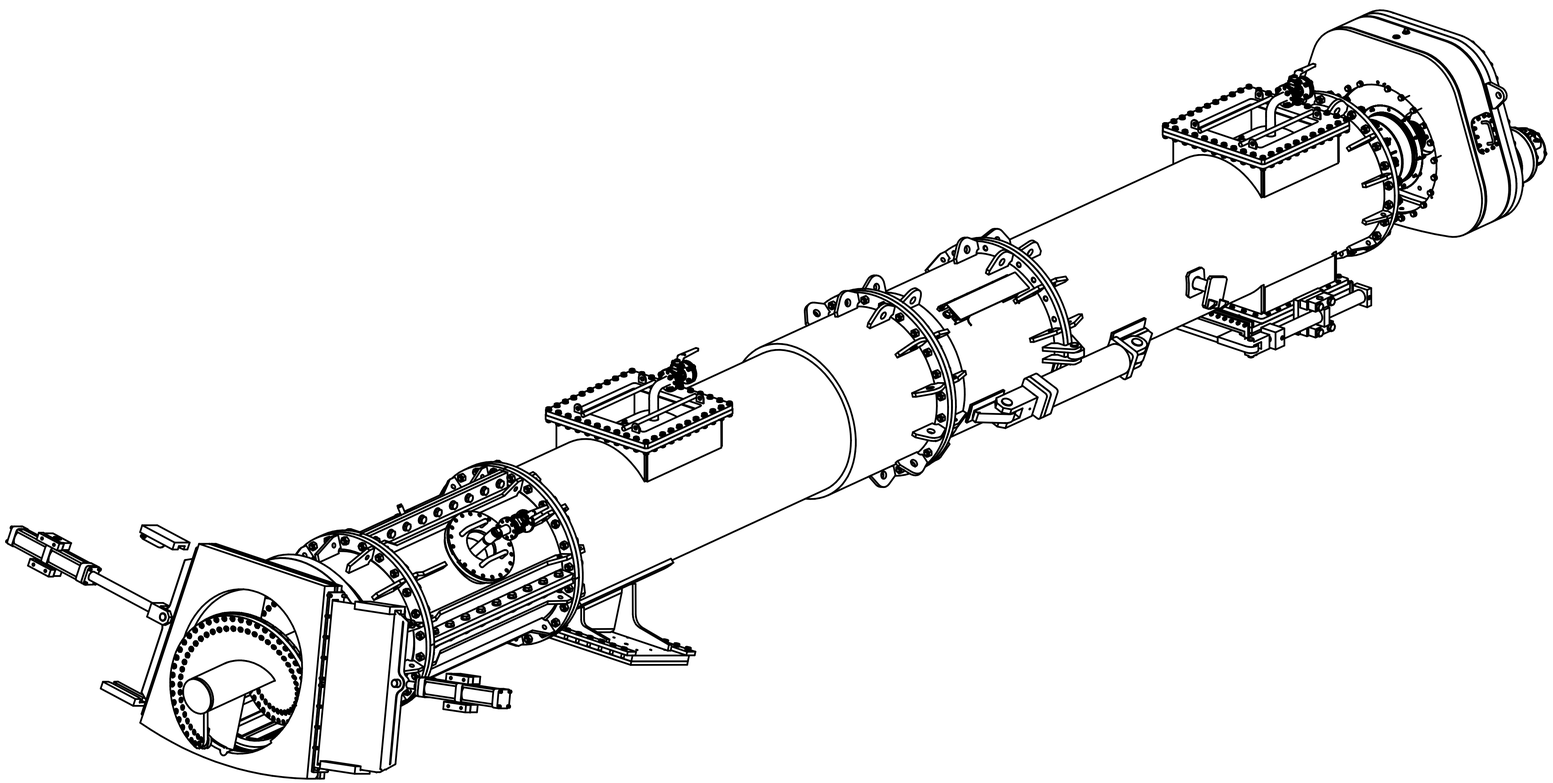

TRC P/N 1002834
SCREW CONVEYOR ASSEMBLY

PROPRIETARY NOTICE
The information disclosed hereon, is the sole property of The Robbins Company, and remains their sole property. It shall not be copied, used or disclosed to others for any purpose by any other party without prior written consent of The Robbins Company. By accepting this information, recipient agrees to the foregoing and to indemnify The Robbins Company for any damages whatsoever to the conditions. This material is on loan only, and is to be returned upon request to The Robbins Company.

MACHINE	NEXT ASSY
EPB2016-376	1002830
EPB2016-377	

UNLESS NOTED ALL DIMS ARE mm
TOLERANCES UNLESS NOTED
FRACTIONS (mm): 0-300 ±1.5; 300-1500 ±3; 1500-6000 ±6; 6000+ ±12
MACHINING (mm): X ±1.5; X.X ±1.0; X.XX ±0.40; X.XXX ±0.100; ANGLES ±1°; SURFACE FINISH 6.3
THIRD ANGLE PROJECTION
DIMENSIONS (X) ARE REF
ALL GEOMETRIC DIMENSIONING & TOLERANCING PER ANSI Y14.5-2009

REV	DESCRIPTION	REV'D BY/ DATE	APP'D BY/ DATE

TITLE: SCREW CONVEYOR ASSEMBLY

SIZE D | DWG No. 1002834 | REV 0 | SHT 1 OF 4 | SCALE 1:50 | DO NOT SCALE

DRAWN BY C.RHODE
DATE 8/1/2012
CHECKED STANDARDS B.WAKELEE
CHECKED DESIGN J.HEINEMAN
UNIT OF MEASURE Each
APPROVED BY J.HEINEMAN
DATE 8/6/2012
WEIGHT TOTAL 19578.6 kg

Robbins

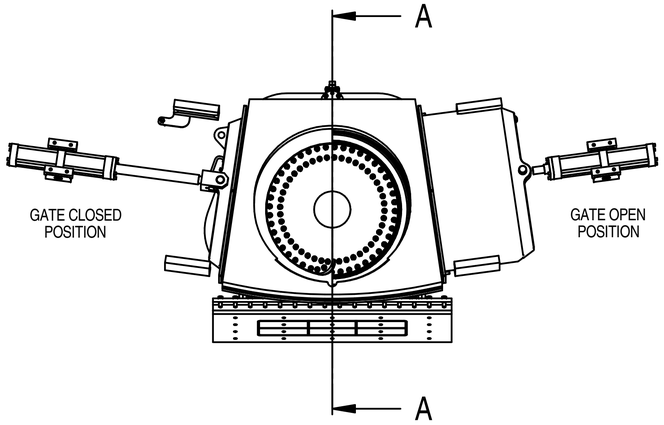

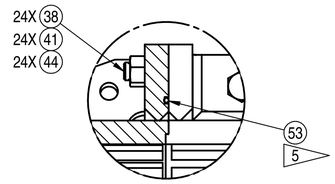

DETAIL H
SCALE 1:5

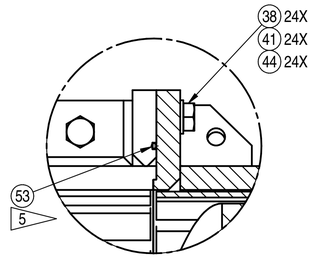

DETAIL J
SCALE 1:5

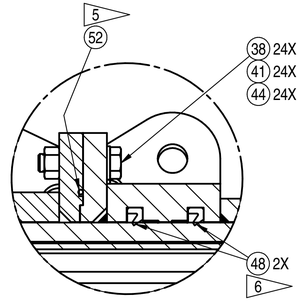

DETAIL K
SCALE 1:5

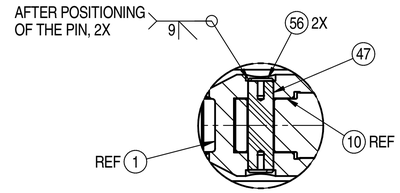

DETAIL L
SCALE 1:10

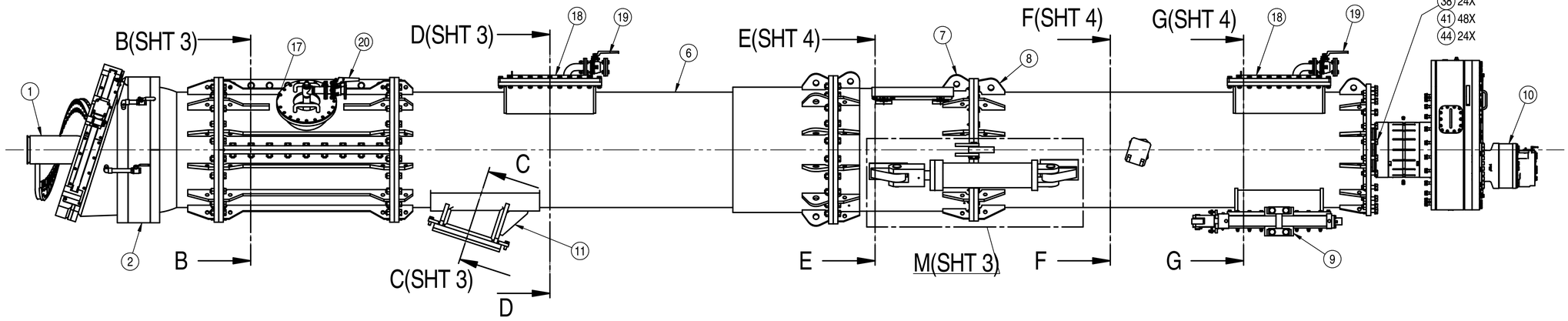

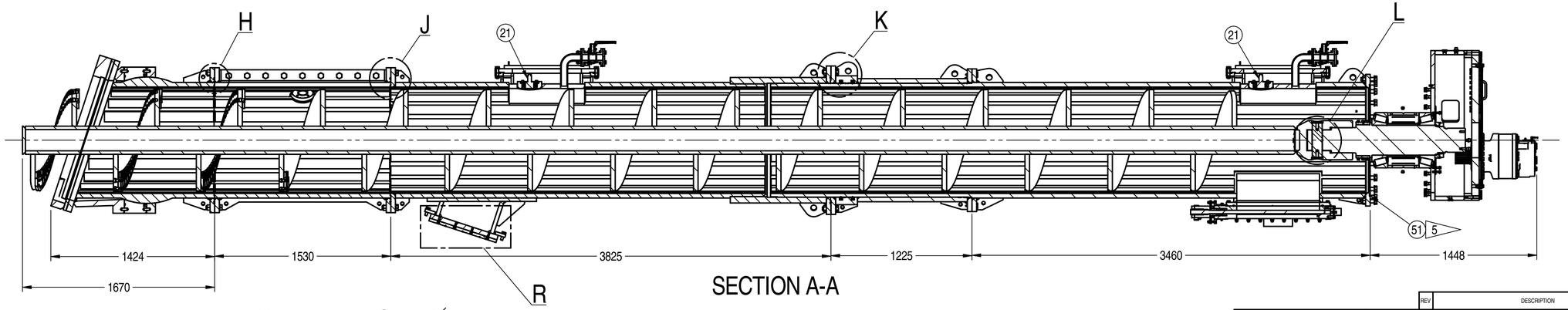

SECTION A-A

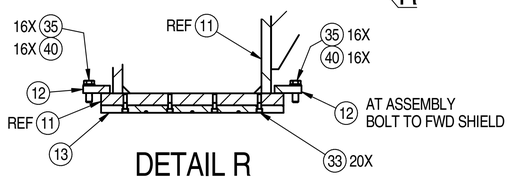

DETAIL R
SCALE 1:10 ◠18.0°

PROPRIETARY NOTICE
The information disclosed hereon, is the sole property of The Robbins Company and remains their sole property. It shall not be copied, used or disclosed to others for any purpose by any other party without prior written consent of The Robbins Company. By accepting this information, recipient agrees to disclose only to employees who need to know and to return it to whatsoever to the conditions. This material is on loan only, and is to be returned upon request to The Robbins Company.

MACHINE	NEXT ASSY
EPB2016-376	1002830
EPB2016-377	

UNLESS NOTED ALL DIMS ARE mm

TOLERANCES UNLESS NOTED

FASTENING (mm)		MACHINING (mm)	
0-300	±1.5	X	±1.5
300-1500	±3	X.X	±1.0
1500-6000	±6	X.XX	±0.40
6000+	±12	X.XXX	±0.100
		ANGLES	±1°
		SURFACE FINISH	6.3

THIRD ANGLE PROJECTION

DIMENSIONS (X) ARE REF

ALL GEOMETRIC DIMENSIONING & TOLERANCING PER ANSI Y14.5-2009

REV	DESCRIPTION	REV'D BY/ DATE	APP'D BY/ DATE

TITLE
SCREW CONVEYOR ASSEMBLY

SIZE	DWG No.	REV	SHT	OF	SCALE
D	1002834	0	2	4	1:20

DO NOT SCALE

DRAWN BY	CHECKED STANDARDS
C.ROHDE	B.WAKELEE
DATE	CHECKED DESIGN
8/1/2012	J.HEINEMAN
UNIT OF MEASURE	APPROVED BY
Each	J.HEINEMAN
WEIGHT TOTAL	DATE
19578.6 kg	8/6/2012

Robbins

www.TheRobbinsCompany.com

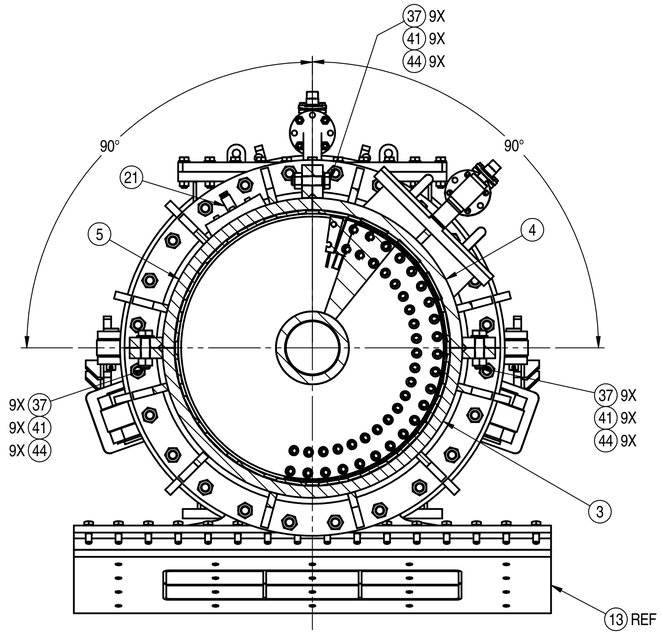

SECTION B-B (SHT 2)
SCALE 1:10

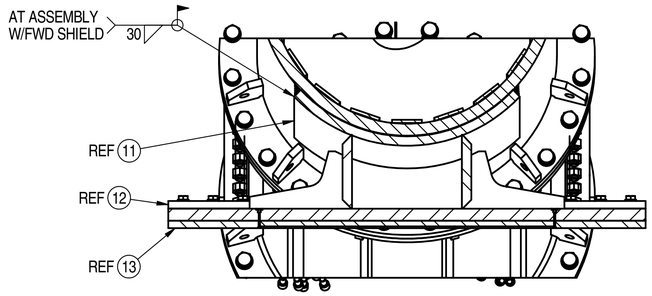

SECTION C-C (SHT 2)
SCALE 1:10 18.0°

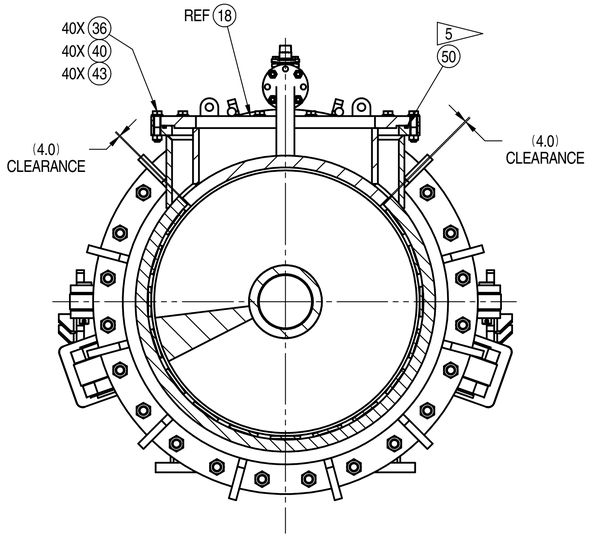

SECTION D-D (SHT 2)
SCALE 1:10

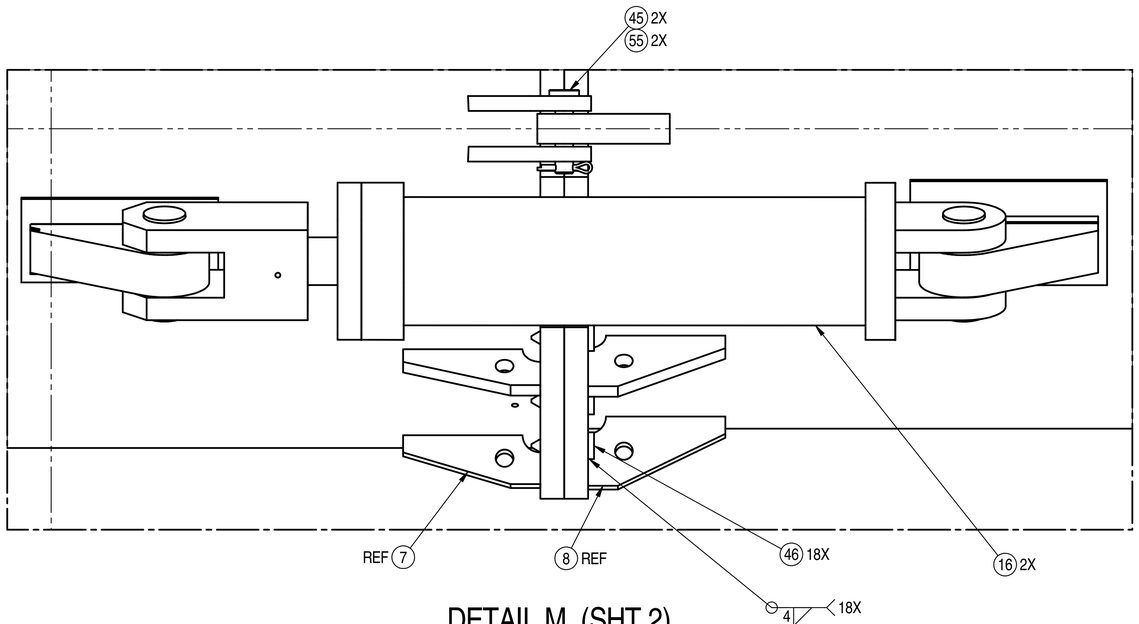

DETAIL M (SHT 2)
SCALE 1:5

PROPRIETARY NOTICE
The information disclosed hereon, is the sole property of The Robbins Company, and remains their sole property. It shall not be copied, used or disclosed to anyone for any purpose or any other party without prior written consent of The Robbins Company. By accepting this information, recipient agrees to comply with the foregoing restrictions and to return this material to whatsoever is the conditions. This material is on loan only, and is to be returned upon request to The Robbins Company.

MACHINE	NEXT ASSY
EPB2016-376	1002830
EPB2016-377	

UNLESS NOTED ALL DIMS ARE mm
TOLERANCES UNLESS NOTED

FRACTIONS (mm)		MACHINING (mm)	
0-300	±1.5	X	±1.5
300-1500	±3	X.X	±1.0
1500-6000	±6	X.XX	±0.40
6000+	±12	X.XXX	±0.100
		ANGLES	±1°
		SURFACE FINISH	6.3

THIRD ANGLE PROJECTION

DIMENSIONS (X) ARE REF

ALL GEOMETRIC DIMENSIONING & TOLERANCING PER ANSI Y14.5-2009

REV	DESCRIPTION	REV'D BY/ DATE	APP'D BY/ DATE

TITLE
SCREW CONVEYOR ASSEMBLY

SIZE	DWG No.	REV	SHT	OF	SCALE
D	1002834	0	3	4	1:1

DO NOT SCALE

DRAWN BY	CHECKED STANDARDS
C.ROHDE	B.WAKELEE
DATE	CHECKED DESIGN
8/1/2012	J.HEINEMAN
UNIT OF MEASURE	APPROVED BY
Each	J.HEINEMAN
WEIGHT TOTAL	DATE
19578.6 kg	8/6/2012

Robbins

www.TheRobbinsCompany.com

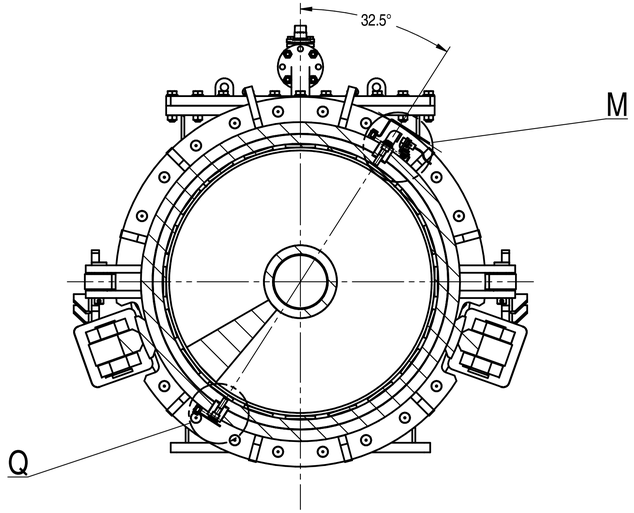

SECTION E-E (SHT 2)
SCALE 1:10

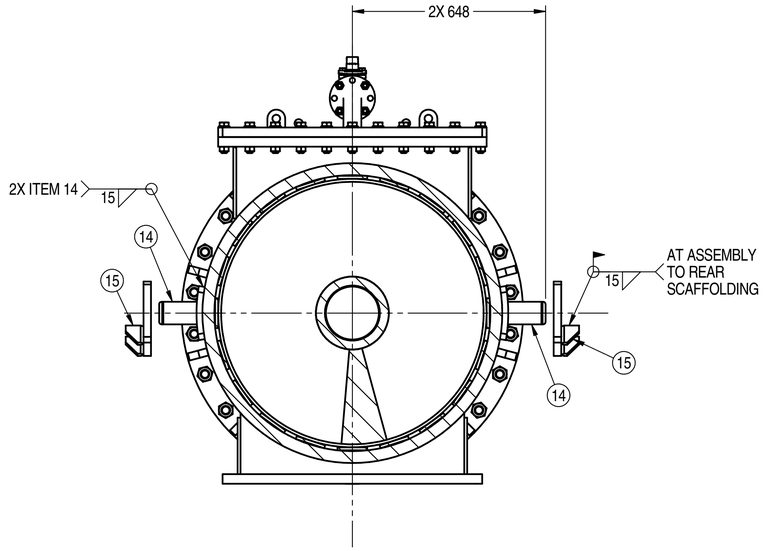

SECTION F-F (SHT 2)
SCALE 1:10

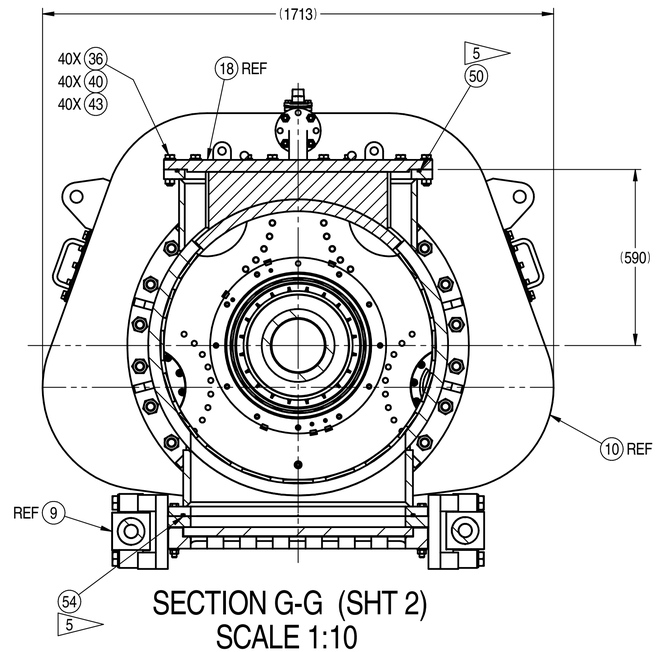

SECTION G-G (SHT 2)
SCALE 1:10

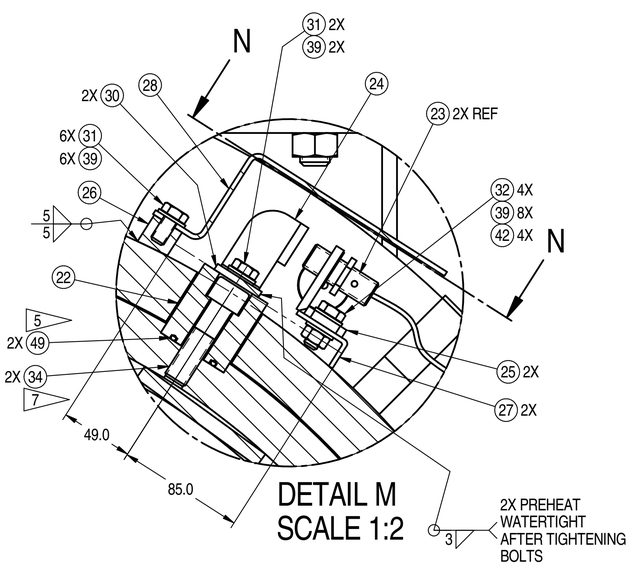

DETAIL M
SCALE 1:2

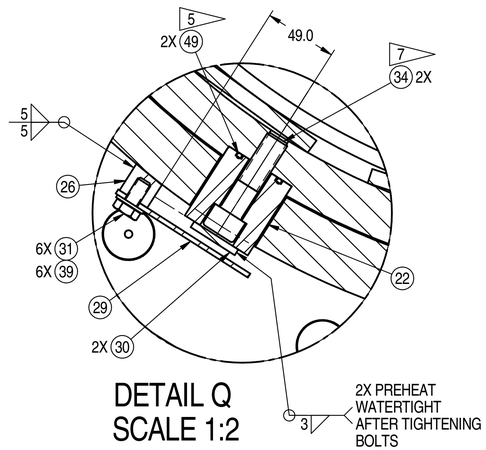

DETAIL Q
SCALE 1:2

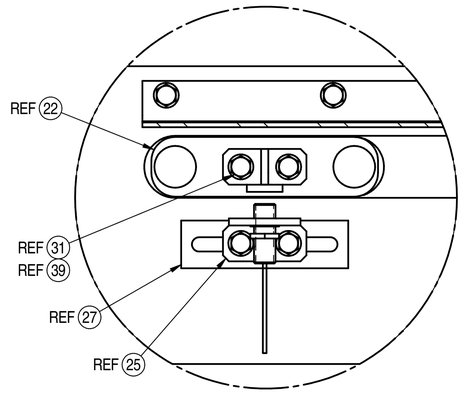

DETAIL P
SCALE 1:2.5

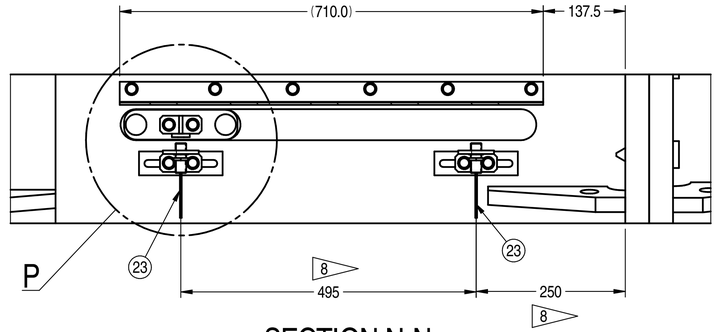

SECTION N-N
SCALE 1:5 ↶302.5°

REV	DESCRIPTION	REV'D BY/ DATE	APP'D BY/ DATE

TITLE
SCREW CONVEYOR ASSEMBLY

MACHINE	NEXT ASSY
EPB2016-376	1002830
EPB2016-377	

UNLESS NOTED ALL DIMS ARE mm

TOLERANCES UNLESS NOTED

FAB (mm)		MACHINING (mm)	
0-300	±1.5	X	±1.5
300-1500	±3	X.X	±1.0
1500-6000	±6	X.XX	±0.40
6000+	±12	X.XXX	±0.100
		ANGLES	±1°
THIRD ANGLE PROJECTION		SURFACE FINISH	6.3

DIMENSIONS (X) ARE REF

ALL GEOMETRIC DIMENSIONING & TOLERANCING PER ANSI Y14.5-2009

SIZE D | DWG No. 1002834 | REV 0 | SHT 4 OF 4 | SCALE 1:1

DO NOT SCALE

DRAWN BY C.ROHDE | DATE 8/1/2012 | CHECKED STANDARDS B.WAKELEE | CHECKED DESIGN J.HEINEMAN

UNIT OF MEASURE Each | APPROVED BY J.HEINEMAN

WEIGHT TOTAL 19578.6 kg | DATE 8/6/2012

Robbins

www.TheRobbinsCompany.com

PROPRIETARY NOTICE
The information disclosed hereon, is the sole property of The Robbins Company, and remains their sole property. It shall not be duplicated in full or part, used by, or disclosed to any other party without prior written consent of The Robbins Company. By accepting this information, recipient agrees to abide in total with this notice, without any modification whatsoever to the conditions. This material is on loan only, and is to be returned upon request to The Robbins Company.

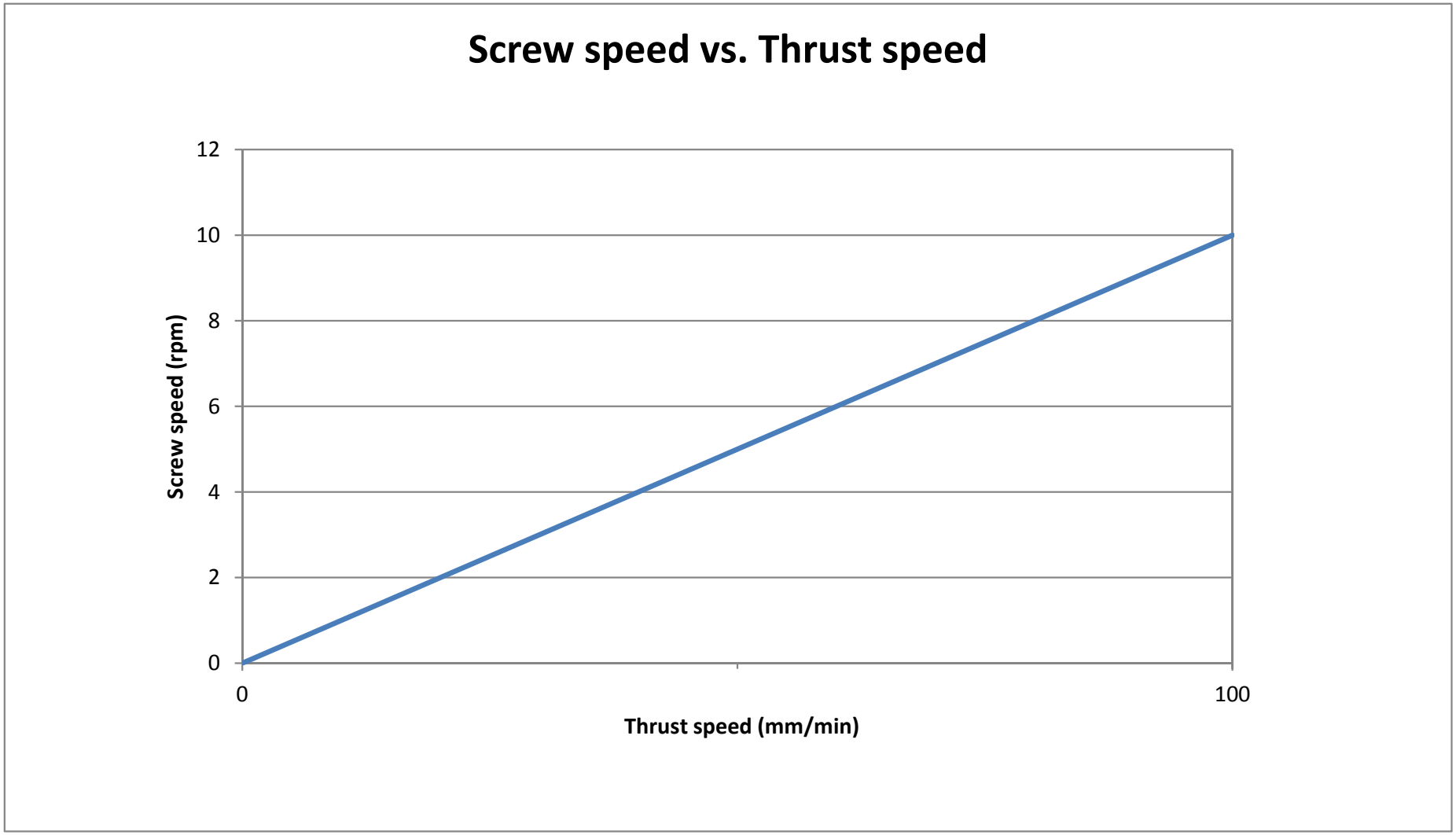

*Screw speed is dependent on ground conditions and additive injection ratios. Chart above assumes 30% foam/additive injection.

QTY	PART No.	DESCRIPTION	DWG No.	WT. Total	ITEM
1	654-052	LOCTITE C5-A Cu BASED ANTI-SEIZE	-	0.0 kg	23*
1	654-051	LOCTITE #515 GASKET ELIMINATOR	-	0.0 kg	24*
1	661-326	PLUG, BREATHER W/VENT G3/4"		0.2 kg	25
2	661-345	PLUG, HOLLOW HEX G3/4"		0.2 kg	26
8	665-001	PLUG, HOLLOW HEX Ø1/8"-28 BSPT		0.0 kg	27
2	A111606-1	MALE TO FEMALE PIPE ADAPTER	A111606	0.2 kg	28
1	A111732-3014820	O-RING, Ø6mm X 1482mm LG	A111732	0.0 kg	29
36	A22151-61108	HHCS, M20x110mm G10.9	A22151	12.5 kg	30
24	A22152-60808	HHCS, M20x80mm G10.9	A22151	6.5 kg	31
40	A22153-30209	SHCS, M10x20mm G12.9	A22153	1.0 kg	32
12	A22153-40609	SHCS, M12x60mm G12.9	A22153	0.9 kg	33
4	A22153-50609	SHCS, M16x60mm G12.9	A22153	0.6 kg	34
4	A22153-51509	SHCS, M16x150mm G12.9	A22153	1.1 kg	35
80	A22153-60808	SHCS, M20x80mm G10.9	A22153	23.0 kg	36
40	A22158-3	WASHER, HD NW OD M10	A22158	0.2 kg	37
60	A22158-6	WASHER, HD NW OD M20	A22158	1.4 kg	38
40	A22159-3	WASHER, LOCK M10	A22159	0.1 kg	39
60	A22159-6	WASHER, LOCK, M20	A22159	0.8 kg	40
6	A68777-5028	DOWEL PIN, Ø10mmx28mm	A68777	0.1 kg	41
2	2005509	GASKET, COVER PLATE	2005509	0.2 kg	42
2	2005508	COVER PLATE	2005508	17.3 kg	43

QTY	PART No.	DESCRIPTION	DWG No.	WT. Total	ITEM
6	2002136	HOLLOW HEX PLUG, 1/2"	2002128	0.2 kg	1
2	2003676	PINION, SHAFTED SCREW 900mm MS50	2003676	81.9 kg	2
2	2005505	PINION RETAINING PLATE	2005505	16.2 kg	3
1	2003681	GEAR, SHAFTED SCREW 900mm	2003681	747.5 kg	4
1	2003753	SHAFTED SCREW DRIVE BRG HOUSING	2003753	1207.2 kg	5
1	2003770	BEARING RETAINING PLATE	2003770	55.0 kg	6
2	2003777	COVER PLATE	2003777	5.1 kg	7
1	2003780	GEAR RETAINING PLATE	2003780	10.9 kg	8
1	2004910	DRIVE MOTOR MOUNTING PLATE, MS50	2004910	696.9 kg	9
1	2003824	SHAFTED SCREW DR MOTOR HOUSING	2003824	802.2 kg	10
1	2003861	COVER PLATE, MOTOR HOUSING	2003861	4.6 kg	11
1	2003862	GASKET, COVER PLATE	2003862	0.0 kg	12
2	2003863	GASKET, COVER PLATE	2003863	0.1 kg	13
1	2003731	HYDRAULIC MOTOR, MS50	2003731	401.5 kg	14
1	2005499	HYD MOTOR MS50 W SENSOR & CABLE	2005499	401.7 kg	15
4	2004025	PRESS FORMED VD SEAL,310x343x20	2004025	1.2 kg	16
1	2004047	DRIVE SHAFT BEARING ASSEMBLY	2004047	774.4 kg	17
1	2004051	SHIM PACK	2004051	1.2 kg	18
1	2003875	OIL LEVEL IND 3/8-19 BOLT ASSY	2003875	0.3 kg	19
12	636-160	WASHER, Zn NORD-LOCK M12	-	0.0 kg	20
8	636-164	WASHER, Zn NORD-LOCK M16	-	0.0 kg	21
80	636-168	WASHER, Zn NORD-LOCK M20	-	0.0 kg	22

* ITEMS NOT SHOWN

NOTES:

1.) ALL FASTENERS TO BE PURCHASED FROM "HIGH QUALITY" SUPPLIER AND TO BE CERTIFIED WITH PAPERWORK AND TO CONTAIN SOURCE OF LOCATION / COUNTRY OF ORGIN, MATERIAL, CHEMICAL, HEAT TREAT, HARDNESS, TENSILE PROPERTIES, ETC.

2.) PAINT INTERIOR OF UNIT WITH TRC CRANKCASE SEALER. DO NOT PAINT THE BEARING OR SEAL AREAS.

3.) PAINT EXTERIOR OF UNIT WITH TRC WHITE ENAMEL, 2 COATS EACH 1.5-2.0 MILS DFT.

4 TORQUE ALL FASTENERS WITHOUT NORD-LOCK WASHERS TO ROBBINS STANDARD 5750 9900 17 UNLESS NOTED OTHERWISE.

5.) ALL FASTENERS INSIDE HOUSING MUST BE INSTALLED WITH NORD-LOCK WASHERS.

6 APPLY LIGHT MACHINE OIL TO THREADS OF SHCS INSTALLED WITH NORD-LOCK WASHERS AND TIGHTEN FASTENERS AS SHOWN FOR EACH INDIVIDUAL SIZE NOTED IN TABLE A.

7 APPLY 654-051 LOCTITE #515 GASKET ELIMINATOR TO SHAFTED SCREW DRIVE BRG HOUSING, SHAFTED SCREW DR MOTOR HOUSING & DRIVE MOTOR MOUNTING PLATE MATING SURFACES AND TIGHTEN FASTENERS.

8 APPLY 654-052 LOCTITE C5-A Cu BASED ANTI-SEIZE TO ALL SPLINES PRIOR TO INSTALLING MATING ELEMENTS.

9 INSTALL SEALS WITH THE LIP ORIENTATION AS SHOWN.

10 ASSEMBLY OF DRIVE SHAFT BEARING ASSEMBLY, BEARING RETAINING PLATE REQUIRES DETERMINING THE FINAL THICKNESS OF 2004051 SHIM PACK (Z.ZZZ mm). NOTE THE MEASUREMENT VALUE STAMPED ON THE FLANGE AREA OF 2003753 SHAFTED SCREW DRIVE BRG HOUSING (X.XXX mm), THE MEASUREMENT STAMPED ON 2003770 BEARING RETAINING PLATE (A.AAA mm) AND THE MEASUREMENT VALUE ON THE TAG ATTACHED TO 2004047 DRIVE SHAFT BEARING ASSEMBLY (B.BBB mm).
USE THE FORMULA ((A.AAA + B.BBB) - X.XXX) = Z.ZZZ mm +0 / -0.080 SEE DRAWINGS FOR DETAILS.

11.) INSPECT ALL COMPONENTS TO MAKE SURE THERE ARE NO METAL CHIPS OR FOREIGN SUBSTANCES ON THE COMPONENTS TO INCLUDE THREADED HOLES. PREVENT FOREIGN SUBSTANCES FROM ENTERING HOUSINGS DURING ASSEMBLY.

12 FILL BEARING HOUSING WITH GREASE (SEE SPECIFICATION). ROTATE THE SHAFT TO ENSURE BOTH BEARINGS ARE FULLY LUBRICATED, AIR POCKETS ARE REMOVED AND THERE IS FREEDOM OF MOVEMENT.

13 DO NOT FILL WITH OIL PRIOR TO SHIPPING. FILL AFTER MACHINE ASSEMBLY INSTALLATION. SECURE A TAG TO THE DRIVE ASSEMBLY PRIOR TO SHIPPING NOTING THAT THE UNIT DOES NOT HAVE OIL AND MUST BE FILLED TO THE CENTER OF THE UPPER DRIVE MOTORS IN THE INSTALLED OPERATING POSITION. FILL SHAFTED SCREW DRIVE MOTOR HOUSING WITH GEAR OIL (SEE SPECIFICATION NOTE) TO THE CENTER OF UPPER HYDRAULIC DRIVE MOTORS INDICATED ON THE OIL LEVEL INDICATOR GAGE WHEN ORIENTED AT MACHINE INSTALATION IN THE OPERATING POSITION.

14.) USE EXTREME CARE DURING THE ASSEMBLY OF COMPONENTS OVER DOWEL PINS TO MAINTAIN MOTORS, GEARS, BEARINGS AND SHAFT ALIGNMENT, PROPER BACKLASH AND MESH OF GEARED ELEMENTS.

15.) MEASURE AND RECORD FINAL ASSEMBLED SHAFT END PLAY. END PLAY RANGE SHOULD BE 0.23-0.29mm.

16.) MEASURE AND RECORD FINAL ASSEMBLED BACKLASH. BACKLASH RANGE SHOULD BE1.50-2.00mm.

17.) CLEAN ALL PINION TEETH AND APPLY BLUING DIE TO BOTH SIDES OF PINION TEETH ACROSS ENTIRE FACE WIDTH.

18.) APPLY CORROSION PROTECTANT TO ALL GEARED ELEMENTS.

TABLE A
BOLT WITH NORD-LOCK WASHER TORQUE
BOLT SIZE / TORQUE (Nm) G12.9
M12 — 128
M16 — 311
M20 — 610

TABLE OF SPECIFICATION	
SPEC NAME	DATA VALUES
OIL	220 CLP QTY 200L
GREASE	LGEV 2 QTY 30L
OUTPUT TORQUE	100kNm
RATIO	4:1
SPEED RANGE	0-25 RPM
LIFE	2000hrs

PROPRIETARY NOTICE
This information is disclosed herein, is the sole property of The Robbins Company, and remains their sole property. It shall not be duplicated in full or part, used for design, manufacture, or sale without the written consent of The Robbins Company. By accepting this information, recipient agrees to abide in total to the conditions. This material is on loan only, and is to be returned upon request to The Robbins Company.

BY/ DATE | DESCRIPTION | REV

MACHINE: EPB STD | NEXT ASSY

UNLESS NOTED ALL DIMS ARE mm
TOLERANCES UNLESS NOTED
MACHINING (mm): 0-300 ±1.5; 300-1500 ±3; 1500-6000 ±6; 6000+ ±12
FAB (mm): X.X ±0.8; X.XX ±0.25; X.XXX ±0.080; X.XXXX±0.0125; ANGLES ±1°; SURFACE FINISH 125
DIMENSIONS (X) ARE REF
ALL GEOMETRIC DIMENSIONING & TOLERANCING PER ANSI Y14.5M-1982 AS APPLICABLE

TITLE: SHFT SCW DR ASY 900mm MS50 2 MTR
SIZE D | DWG No. 2005514 | REV 0 | SHT 1 OF 4 | SCALE: SEE DETAIL, DO NOT SCALE
DRAWN: A. SHAFER DATE: 7/22/2011
CHECKED: C. PEAVEY DATE: 7/26/2011
THIRD ANGLE PROJECTION
APPROVED: C. PEAVEY DATE: 7/26/2011
WEIGHT TOTAL: 5274.4 kg

Robbins

www.TheRobbinsCompany.com

2005514

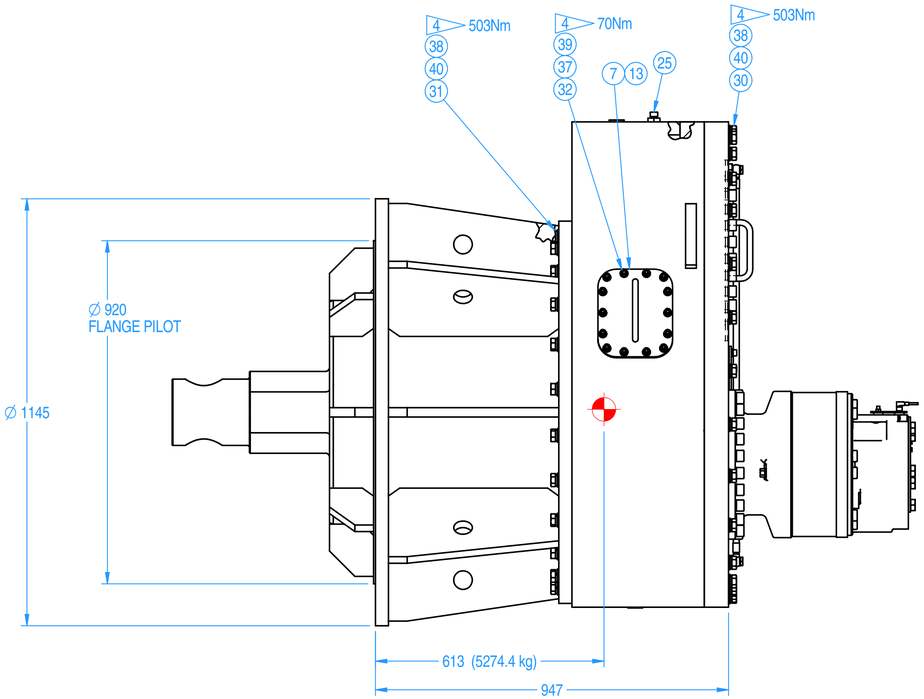

1:8

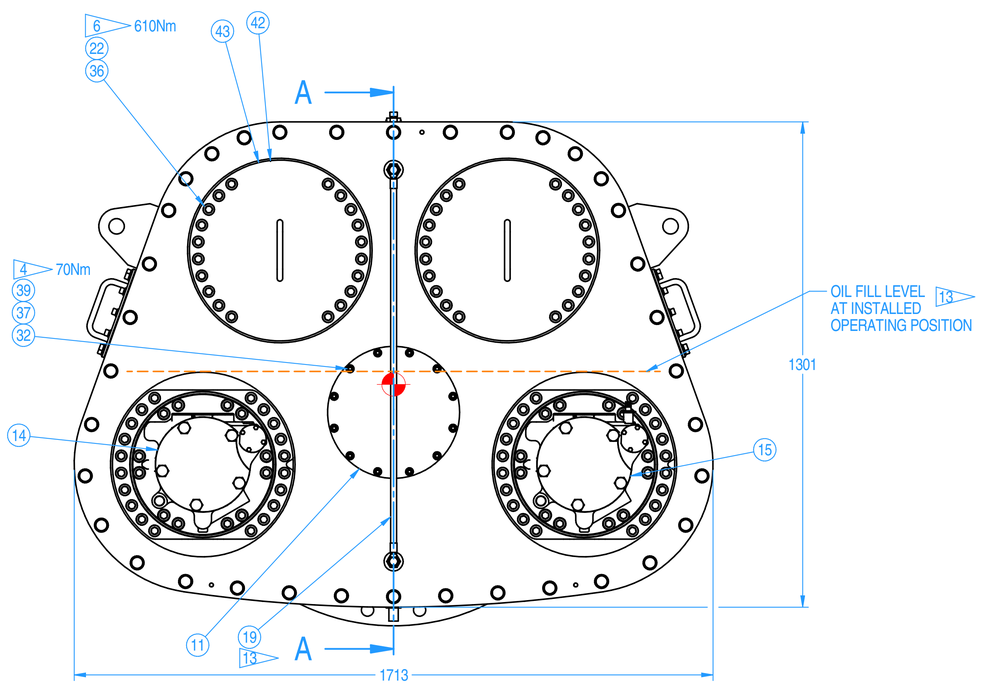

1:8

2005514

REV	DESCRIPTION	BY/ DATE

PROPRIETARY NOTICE

The information disclosed hereon, is the sole property of The Robbins Company, and remains their sole property. It shall not be duplicated in full or part, used by or disclosed to any other party without prior written consent of The Robbins Company. By accepting this information, recipient agrees to abide in total with this notice, without any modification whatsoever to the conditions. This material is on loan only, and is to be returned upon request to The Robbins Company.

MACHINE	NEXT ASSY
EPB STD	

UNLESS NOTED ALL DIMS ARE mm

TOLERANCES UNLESS NOTED

FAB (mm)		MACHINING (mm)	
0-300	±1.5	X.X	±0.8
300-1500	±3	X.XX	±0.25
1500-6000	±6	X.XXX	±0.080
6000+	±12	X.XXXX	±0.0125
		ANGLES	±1°
		SURFACE FINISH	3.2

DIMENSIONS (X) ARE REF

ALL GEOMETRIC DIMENSIONING & TOLERANCING PER ANSI Y14.5M-1982 AS APPLICABLE.

TITLE

SHFT SCW DR ASY 900mm MS50 2 MTR

SIZE	DWG No.	REV	SHT	SCALE:
D	2005514	0	2 OF 4	SEE DETAIL - DO NOT SCALE

Robbins

DRAWN	CHECKED
A. SHAFER	C. PEAVEY
DATE 7/22/2011	DATE 7/26/2011
THIRD ANGLE PROJECTION	APPROVED C. PEAVEY
WEIGHT TOTAL: 5274.4 kg	DATE 7/26/2011

www.TheRobbinsCompany.com

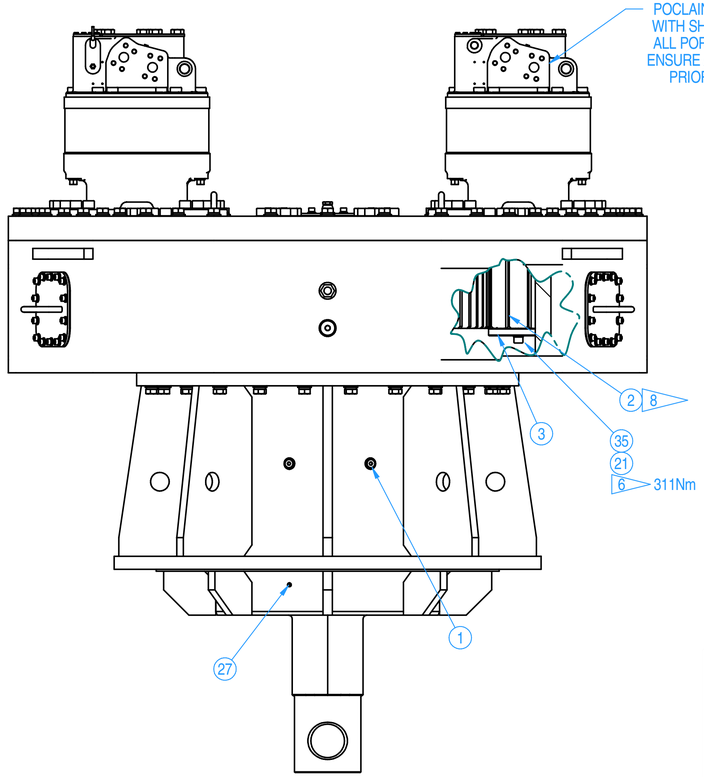

1:8

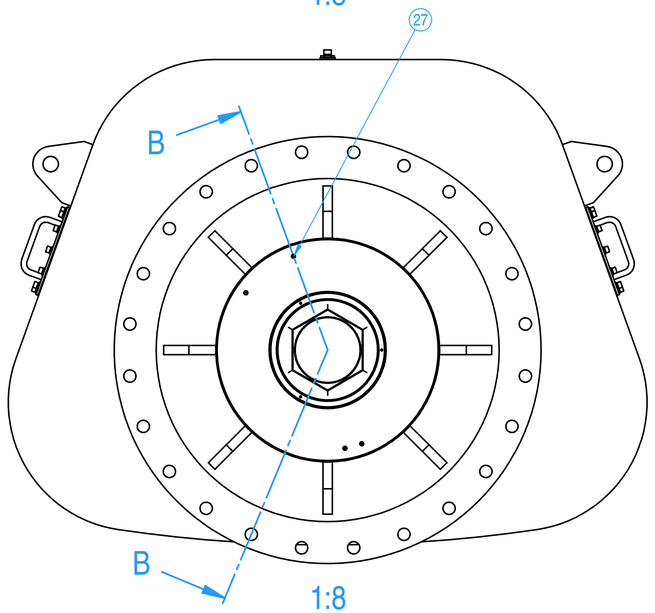

1:8

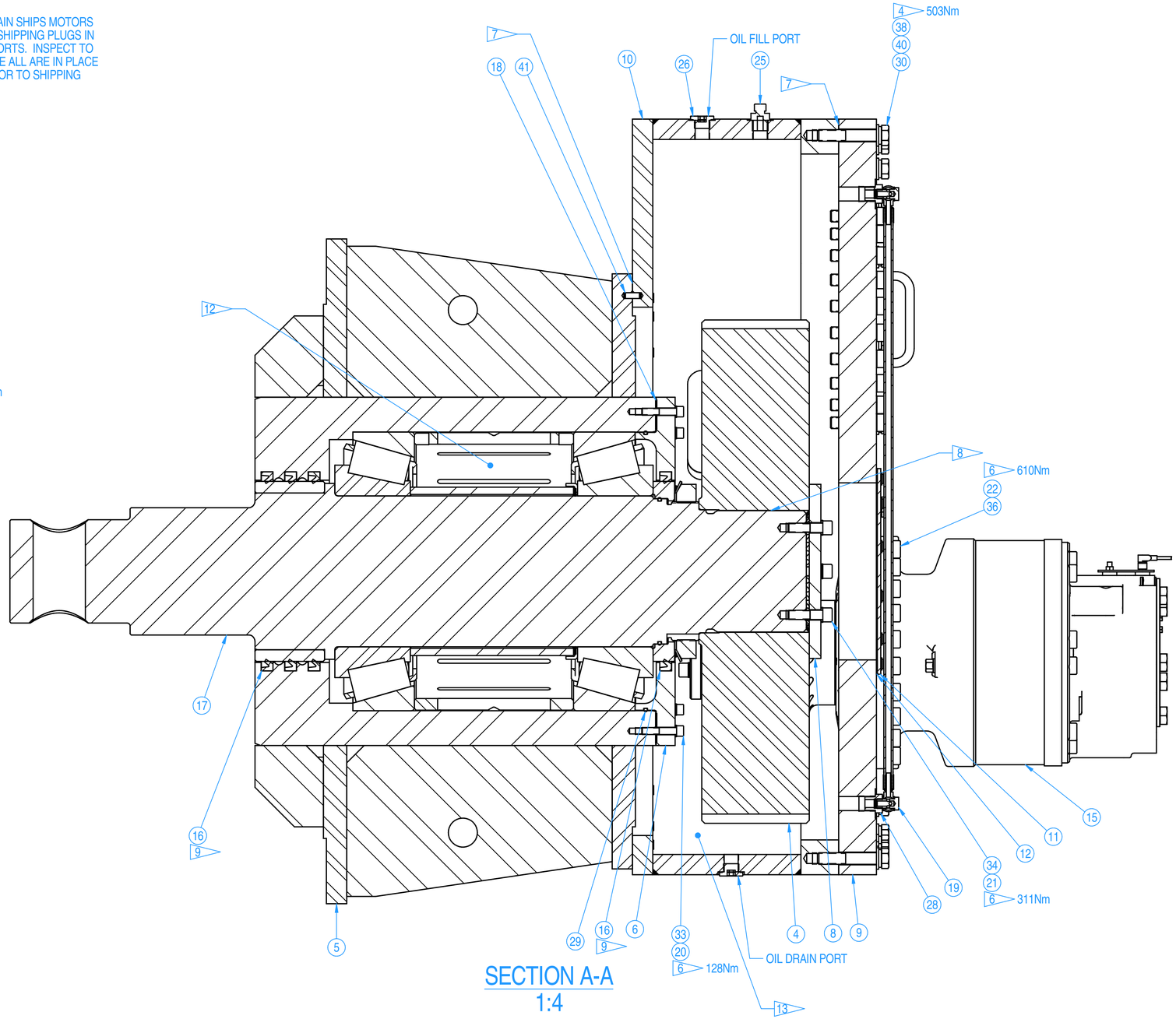

SECTION A-A
1:4

| | | |

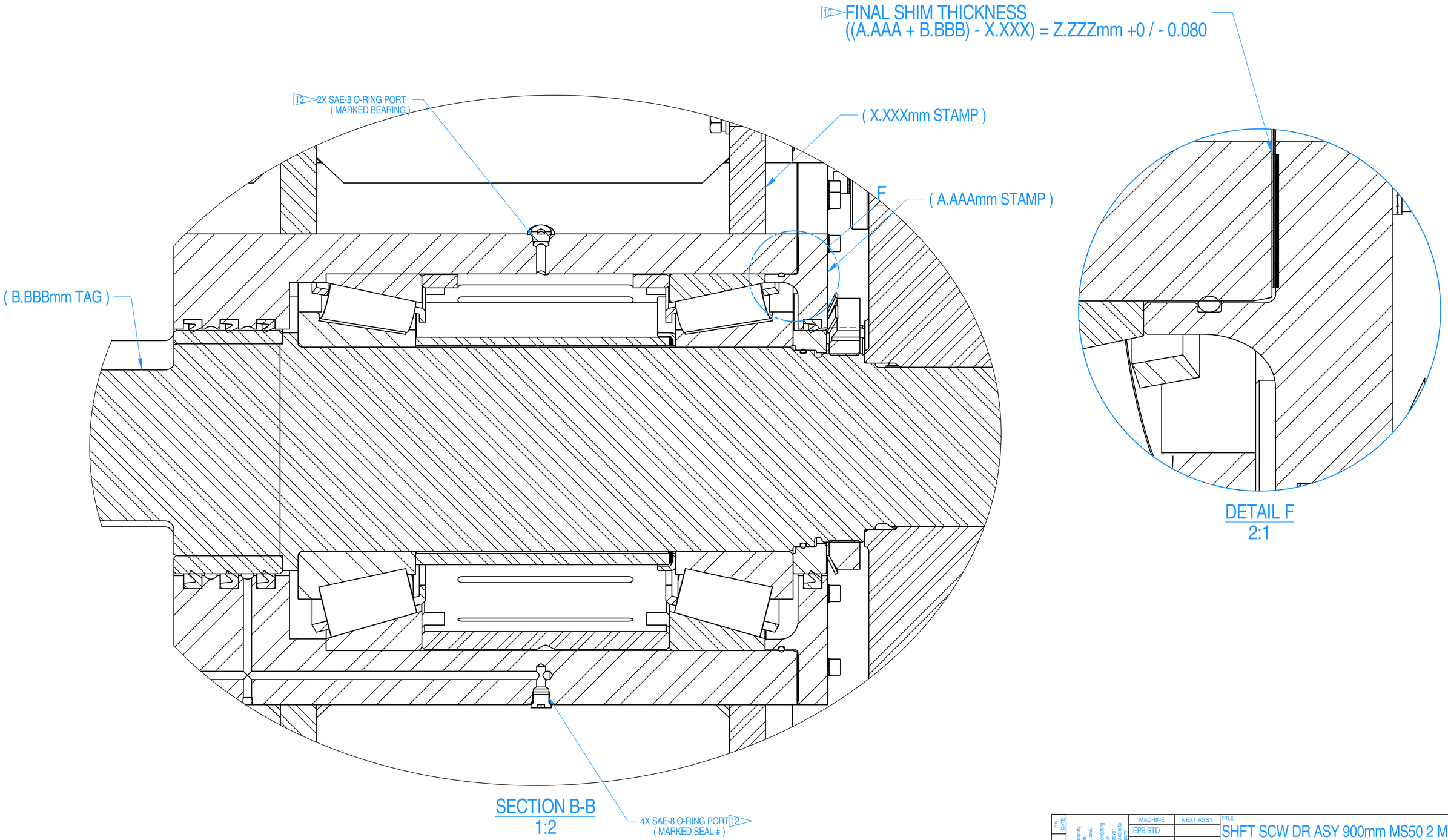

SECTION B-B
1:2

DETAIL F
2:1

2005514

REV	DESCRIPTION	BY/ DATE

PROPRIETARY NOTICE

The information disclosed herein is the sole property of The Robbins Company, and remains their sole property. It shall not be duplicated in full or part, used by or disclosed to any other party without prior written consent of The Robbins Company. By accepting this information, recipient agrees to abide in total with this notice, without any modification whatsoever to the conditions. This material is on loan only, and is to be returned upon request to The Robbins Company.

MACHINE	NEXT ASSY
EPB STD	

UNLESS NOTED ALL DIMS ARE mm

TOLERANCES UNLESS NOTED

FAB (mm)		MACHINING (mm)	
0-300	±1.5	X.X	±0.8
300-1500	±3	X.XX	±0.25
1500-6000	±6	X.XXX	±0.080
6000+	±12	X.XXXX	±0.0125
		ANGLES	±1°
		SURFACE FINISH	3.2

DIMENSIONS (X) ARE REF

ALL GEOMETRIC DIMENSIONING & TOLERANCING PER ANSI Y14.5M-1982 AS APPLICABLE.

TITLE
SHFT SCW DR ASY 900mm MS50 2 MTR

SIZE	DWG No.	REV	SHT	SCALE:
D	2005514	0	4 OF 4	SEE DETAIL - DO NOT SCALE

Robbins

DRAWN	CHECKED
A. SHAFER	C. PEAVEY
DATE 7/22/2011	DATE 7/26/2011
THIRD ANGLE PROJECTION	APPROVED C. PEAVEY
WEIGHT TOTAL: 5274.4 kg	DATE 7/26/2011

www.TheRobbinsCompany.com

NOTES:

1. REMOVE ALL BURRS & BREAK SHARP EDGES.
2. ALL WELDING SHALL MEET THE REQUIREMENTS OF THE LATEST EDITION OF THE AWS STRUCTURAL WELDING CODE (D1.1/D1.1M) ALL SECTIONS AS APPLICABLE UNLESS OTHERWISE NOTED. USE E70XX LOW HYDROGEN ELECTRODES OR EQUIVALENT.
3. TORQUE ALL FASTENERS PER TRC SPEC 5750 9900 17, UNLESS OTHERWISE NOTED.
4. PAINT ROBBINS SPEC RC1852. MACHINED SURFACES NOT TO BE PAINTED, BUT PROTECTED BY OTHER SUITABLE METHODS.
5. STEEL STAMP or ELECTRO-ETCH PART NUMBER, P.O. NUMBER & VENDOR I.D. CODE ON PART WITH (30mm) MIN. HIGH CHARACTERS.

6 INSTALL LIMIT SWITCHES AFTER ADJUSTING POSITION BASED ON GATES FULLY CLOSED AND FULLY OPEN.

7 ADHERED BY CEMEDINE #1500.

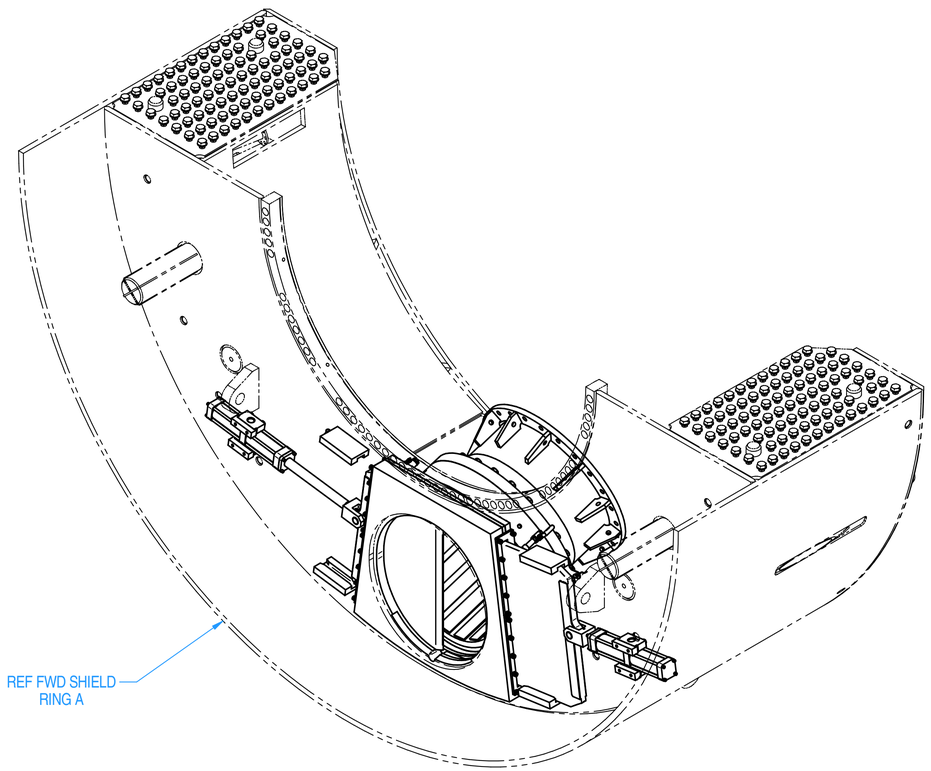

TRC P/N 1036607
BULKHEAD GATE ASSEMBLY
1:20

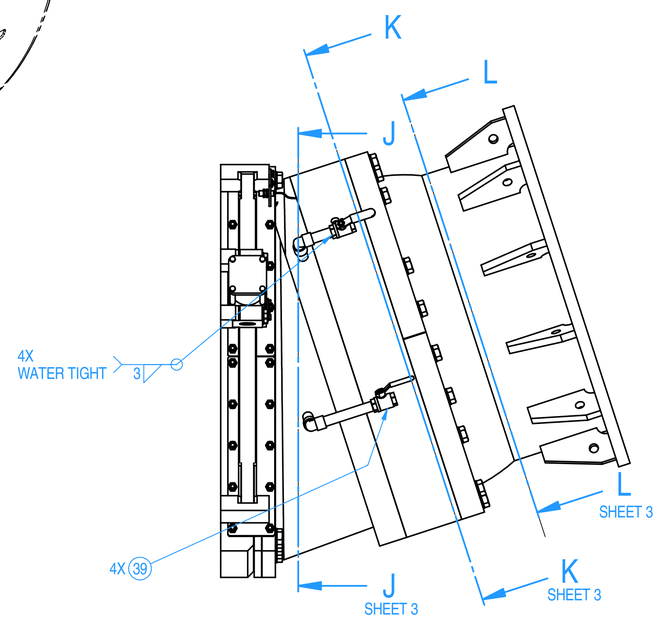

FWD SHIELD NOT SHOWN

SIDE VIEW
1:10

QTY	PART No.	DESCRIPTION	DWG No.	WT. Total	ITEM
1	1036606	BULKHEAD GATE MOUNTING PLATE	1036606	535.6 kg	1
1	1036628	MTG PLATE	1036628	155.1 kg	2
1	1036650	FOWARD MACHINING	1036650	814.1 kg	3
1	1047108	UNION	1047108	489.1 kg	4
2	1047109	COLLAR	1047109	180.9 kg	5
1	1036672	CASING, MACHINING	1036672	1737.6 kg	6
1	1036622	DOOR, GATE, LH	1036622	281.0 kg	7
1	1036624	DOOR, GATE, RH	1036624	281.0 kg	8*
2	1047000	SEAL CLAMP, MACHINING	1047000	18.3 kg	9
2	1047209	SEAL CLAMP B, MACHINING	1047209	18.3 kg	10
2	1047423	TOP BULKHEAD GATE GASKET	1047423	0.1 kg	11
2	1047424	BOTTOM BULKHEAD GATE GASKET	1047424	0.1 kg	12
2	1047378	CYL,Ø100BxØ63.5Rx540S	1047378	148.5 kg	13
2	1030565	DOUBLE HEADED BRACKET	1030565	18.6 kg	14
4	1047384	TRUNNION BLOCK	1047384	20.9 kg	15
4	1030136	MOUNTING PLATE	1030136	11.8 kg	16
2	1030569	KEEPER PLATE	1030569	0.2 kg	17
4	1047626	DOOR SIDE SUPPORT	1047626	65.2 kg	18
2	1047637	SENSOR BRACKET	1047637	1.5 kg	19
2	5750000987	PROXIMITY SENSOR	5750000987	0.2 kg	20
6	1047425	GYLON PACKING - BULKHEAD GATE	1047425	0.3 kg	21*
1	1047641	VD SEAL Ø1150 x Ø1100 x 26	1047641	2.0 kg	22*
2	1030568	PIN, SLOTTED Ø50f8x128mm	1030568	4.2 kg	23
40	1047430	STUD, SEAL CLAMP	1047430	5.6 kg	24
4	A22152-20352	HHCS, M8x35mm C5.6	A22152	0.1 kg	25
4	A22152-30208	HHCS, M10x20mm C10.9	A22152	0.1 kg	26
8	A22152-61308	HHCS, M20x130mm C10.9	A22152	3.2 kg	27
4	A22153-71009	SHCS, M24x100mm C12.9	A22153	2.1 kg	28
4	A22153-72109	SHCS, M24x210mm C12.9	A22153	3.6 kg	29
20	A22151-81508	HHCS, M30x150mm C10.9	A22151	21.9 kg	30
20	A22151-83408	HHCS, M30x340mm C10.9	A22151	43.0 kg	31
4	A22159-2	WASHER, LOCK M8	A22159	0.0 kg	32*
4	A22158-2	WASHER, HD NW OD M8	A22158	0.0 kg	33
4	A22159-3	WASHER, LOCK M10	A22159	0.0 kg	34
8	A22158-6	WASHER, HD NW OD M20	A22158	0.2 kg	35
4	A22158-7	WASHER, HD NW OD M24	A22158	0.1 kg	36
40	A22158-8	WASHER, HD NW OD M30	A22158	2.7 kg	37
80	A22154-55	NUT, M16 C8	A22154	2.8 kg	38
4	A79867-5	BALL VALVE, 1" NPT	A79867	3.9 kg	39
4	A68777-9050	DOWEL PIN, Ø20mm x50mm	A68777	0.5 kg	40

PROPRIETARY NOTICE
This information/drawing is the property of The Robbins Company and shall not be reproduced, in the whole or in part, used by, or disclosed to any person or corporation for any purpose whatsoever without the written permission of The Robbins Company. By accepting this information, recipient agrees to indemnify The Robbins Company against any loss or liability resulting from any unauthorized use or disclosure.

MACHINE: EPB2016-378/377 | NEXT ASSY: 1002834

UNLESS NOTED ALL DIMS ARE mm
TOLERANCES UNLESS NOTED:
0-300 ±1.5 | 300-1500 ±3 | 1500-6000 ±6 | 6000+ ±12
THIRD ANGLE PROJECTION
DIMENSIONS IX ARE REF.
ALL GEOMETRIC DIMENSIONING & TOLERANCING PER ANSI Y14.5-2009

X.X ±1.0 | X.XX ±.40 | X.XXX ±.100 | ANGLES ±1° | SURFACE FINISH √

REV	DESCRIPTION	REVD BY / DATE	APPD BY / DATE

TITLE: BULKHEAD GATE ASSEMBLY

SIZE: D | DWG No.: 1036607 | REV: 0 | SHT 1 OF 3 | SCALE: SEE DETAIL | DO NOT SCALE

DRAWN BY: C.RIOHDE | DATE: 1/29/2010
CHECKED STANDARDS: J.SPRAGUE | CHECKED DESIGN: J.SPRAGUE
WEIGHT TOTAL: 5155.3 kg
APPROVED BY: J.HEINEMAN | DATE: 5/7/2012

Robbins
www.TheRobbinsCompany.com

1036607

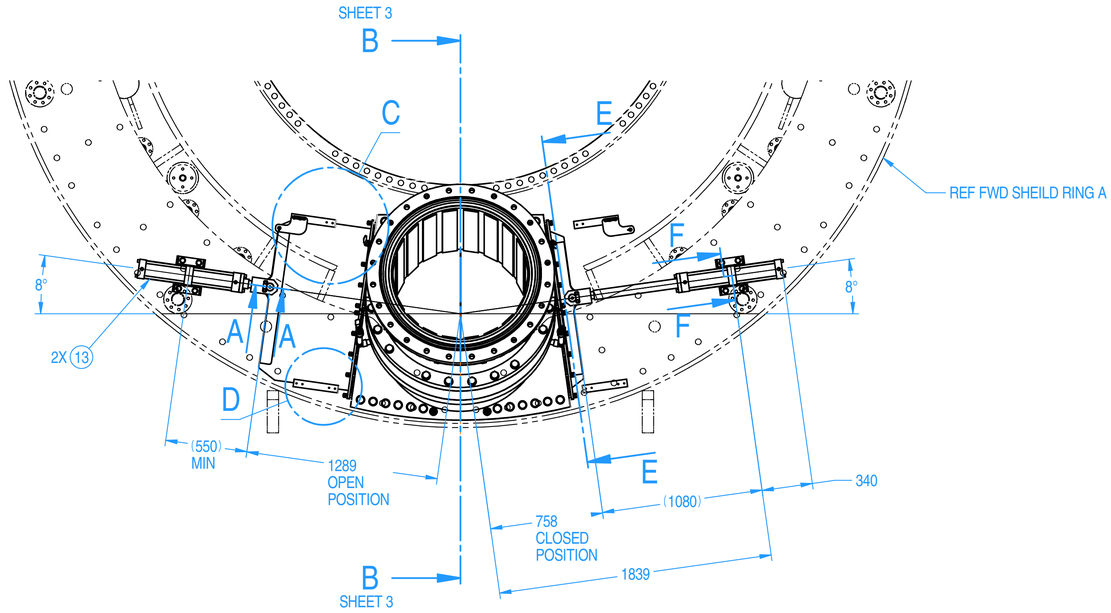

LOOKING FOWARD
1:20

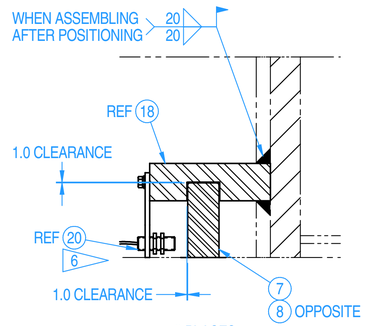

2 PLACES
VIEW ROTATED

SECTION G-G
1:4

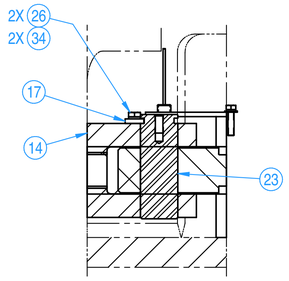

2 PLACES
VIEW ROTATED

SECTION A-A
1:4

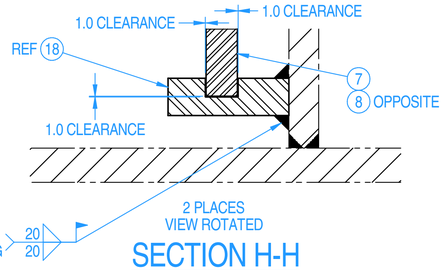

2 PLACES
VIEW ROTATED

SECTION H-H
1:4

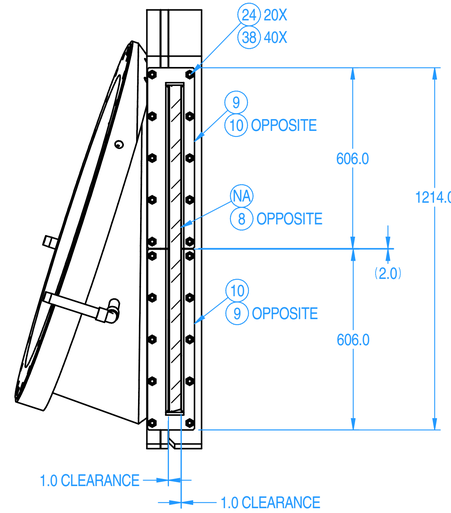

2 PLACES
VIEW ROTATED

SECTION E-E
1:10

TYP - 2 PLACES
VIEW ROTATED

SECTION F-F
1:4

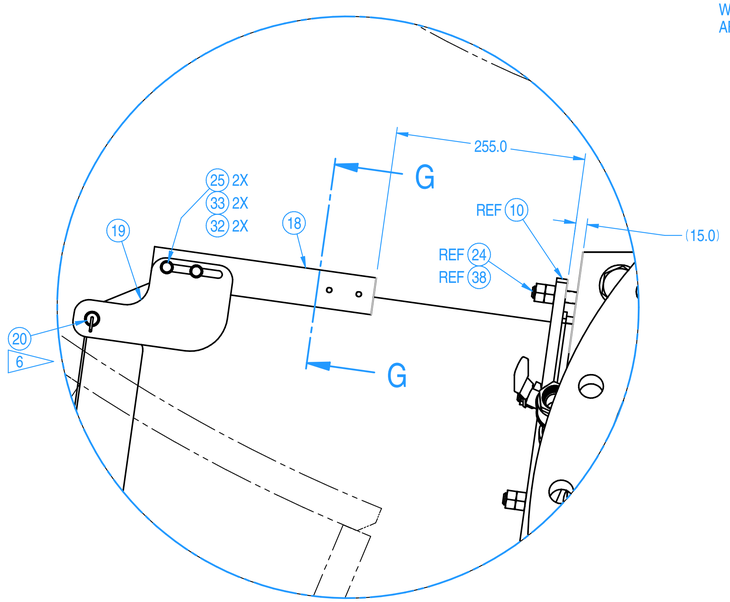

TYP - 2 PLACES

DETAIL C
1:4

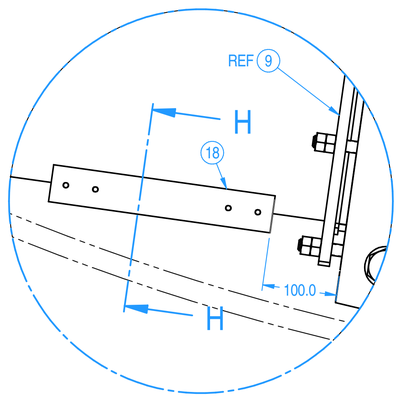

TYP 2 PLACES

DETAIL D
1:4

PROPRIETARY NOTICE
The information disclosed herein is the sole property of The Robbins Company. By accepting this information, it shall not be duplicated in full or part, used for, or disclosed to any other person or entity without the written permission of The Robbins Company. By accepting this information, recipient agrees to defend, indemnify and hold harmless The Robbins Company for whatsoever it may sustain by reason of any breach of this restriction. This material is for information only.

MACHINE	NEXT ASSY
EPB2016-376/377	1002834

UNLESS NOTED ALL DIMS ARE mm
TOLERANCES UNLESS NOTED

0-300	±1.5	X	±1.5
300-1500	±3	X.X	±1.0
1500-6000	±6	X.XX	±.40
6000+	±12	X.XXX	±.100
		ANGLES	±1°
		SURFACE FINISH	√

DIMENSIONS IN( ) ARE REF
ALL GEOMETRIC DIMENSIONING & TOLERANCING PER ANSI Y14.5-2009

REV	DESCRIPTION	REV'D BY/ DATE	APP'D BY/ DATE

TITLE: BULKHEAD GATE ASSEMBLY

SIZE	DWG No.	REV	SHT	SCALE
D	1036607	0	2 OF 3	SEE DETAIL

DO NOT SCALE

DRAWN BY: C.ROHDE
DATE: 1/29/2010
CHECKED STRAIGHTNESS: J.SPRAGUE
CHECKED DESIGN: J.SPRAGUE
WEIGHT TOTAL: 5155.3 kg
APPROVED BY: J.HEINEMAN
DATE: 5/7/2012

Robbins
www.TheRobbinsCompany.com

1036607

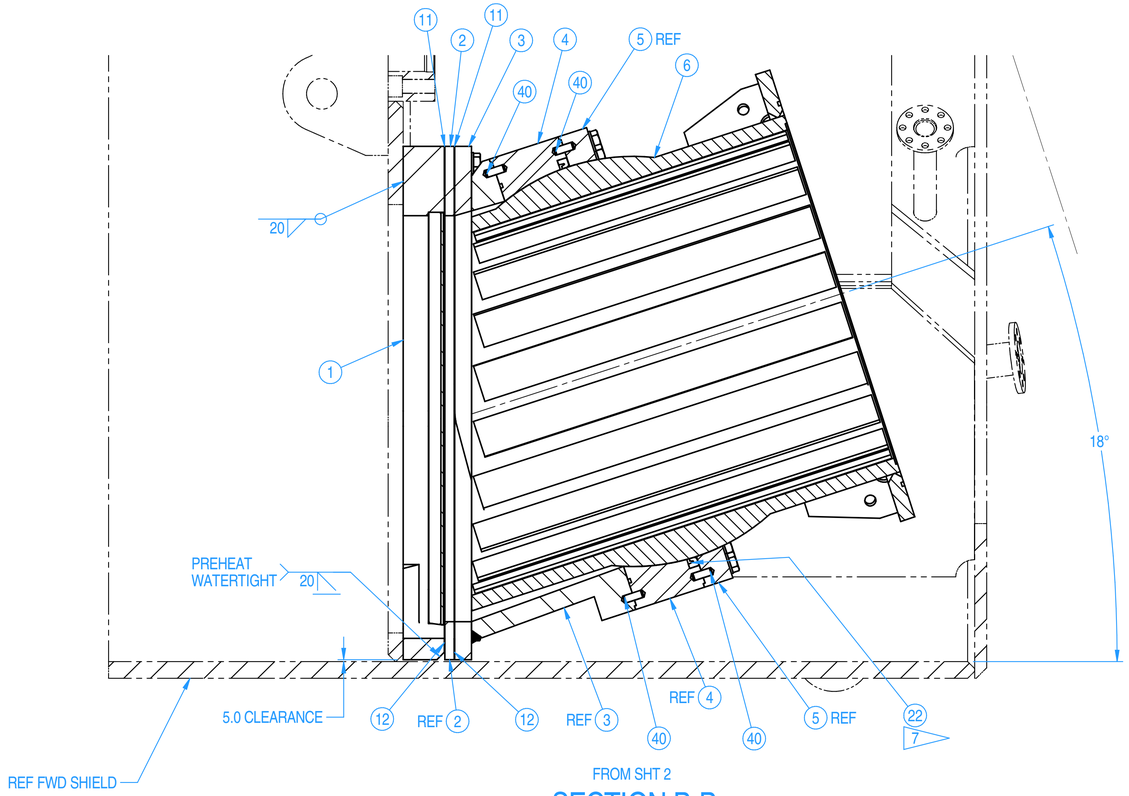

FROM SHT 2

SECTION B-B
1:8

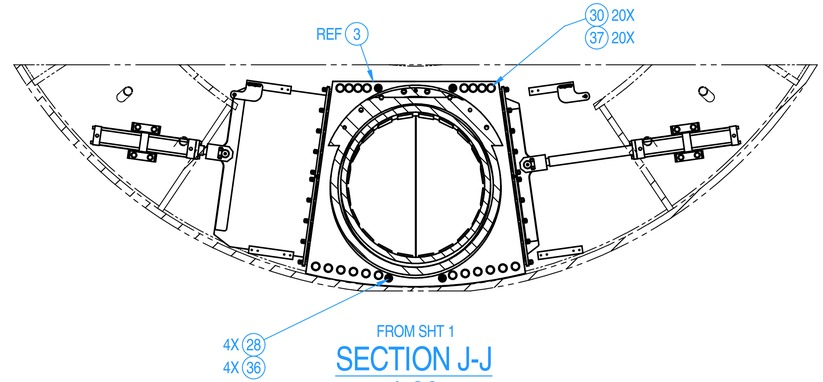

FROM SHT 1

SECTION J-J
1:20

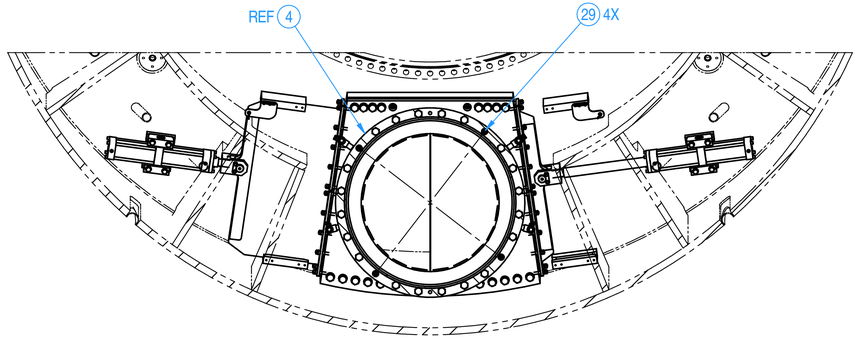

FROM SHT 1

SECTION K-K
1:20

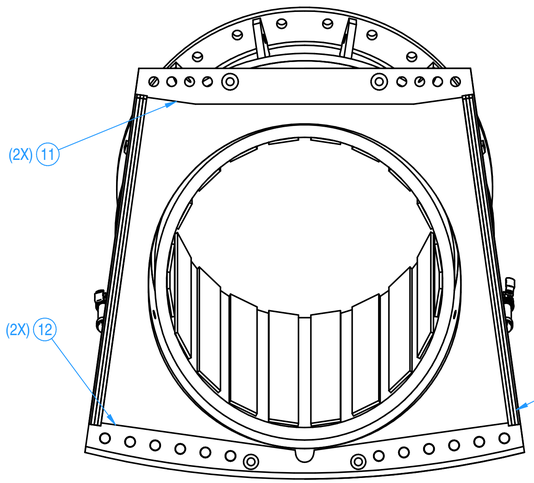

GASKETS (ITEM 11) & (ITEM12)
BETWEEN (ITEM 1) & (ITEM 2) & (ITEM 2) & (ITEM 3)

GASKET LOCATION
1:10

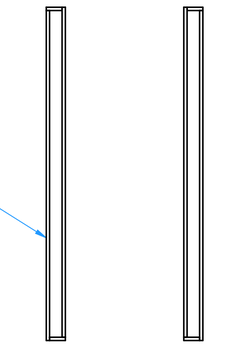

1 ST AND 3 RD LAYERS

2 ND LAYER

OVERLAP PACKINGS AS SHOWN
AVOID OVERLAPING JOINTS

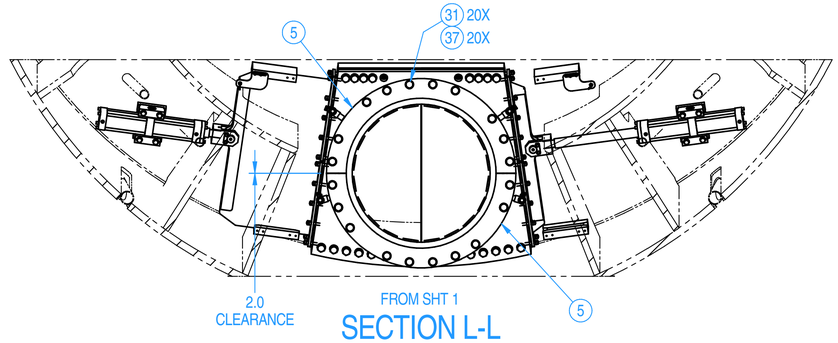

FROM SHT 1

SECTION L-L
1:20

REV	DESCRIPTION	REV'D BY / DATE	APP'D BY / DATE

TITLE: BULKHEAD GATE ASSEMBLY

MACHINE	NEXT ASSY
EPB2016-376/377	1002834

UNLESS NOTED ALL DIMS ARE mm

TOLERANCES UNLESS NOTED

0-300	±1.5	X	±1.5
300-1500	±3	X.X	±1.0
1500-6000	±6	X.XX	±.40
6000+	±12	X.XXX	±.100
		ANGLES	±1°
		SURFACE FINISH	3.2

THIRD ANGLE PROJECTION

DIMENSIONS (X) ARE REF

ALL GEOMETRIC DIMENSIONING & TOLERANCING PER ANSI Y14.5-2009

SIZE: D | DWG No.: 1036607 | REV: 0 | SHT: 3 OF 3 | SCALE: SEE DETAIL | DO NOT SCALE

DRAWN BY: C.ROHDE | DATE: 1/29/2010 | CHECKED STANDARDS: J.SPRAGUE | CHECKED DESIGN: J.SPRAGUE

WEIGHT TOTAL: 5155.3 kg | APPROVED BY: J.HEINEMAN | DATE: 5/7/2012

Robbins

www.TheRobbinsCompany.com

PROPRIETARY NOTICE
The information disclosed herein is the sole property of The Robbins Company, and remains the sole property of it shall not be duplicated in full or part, used by, or disclosed to any other party without prior written consent of The Robbins Company. By accepting this information, recipient agrees to abide in fact with the above, without any modification whatsoever to the conditions. This material is on loan only, and is not to be reproduced or reproduced by The Robbins Company.

1036607

QTY	PART No.	DESCRIPTION	DWG No.	WT. Total	ITEM
1	1036114	CASING, WELDMENT	1036114	6529.7 kg	1

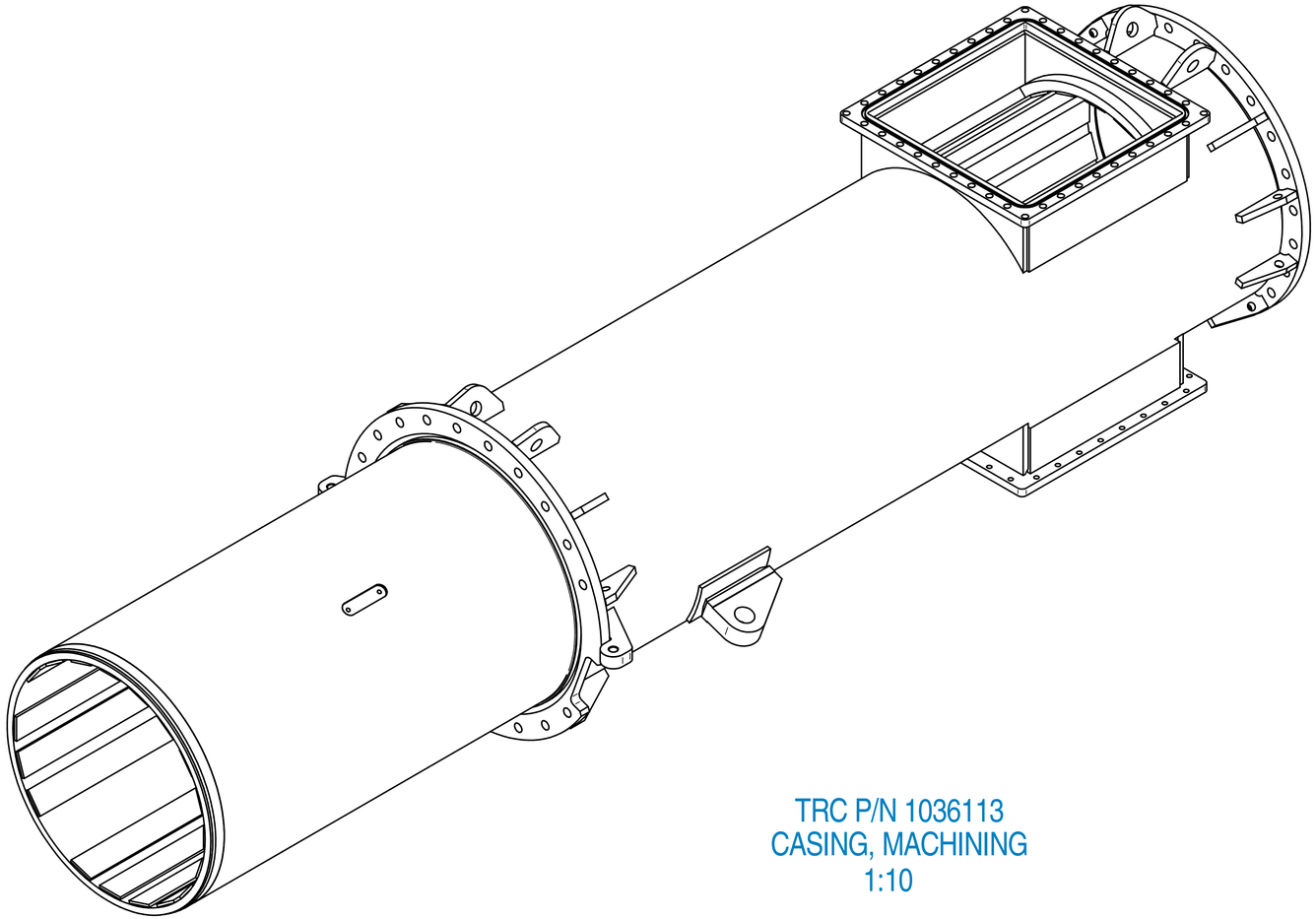

TRC P/N 1036113
CASING, MACHINING
1:10

NOTES:

1. REMOVE ALL BURRS & BREAK SHARP EDGES.
2. PAINT PER ROBBINS SPEC RC 1852
   MACHINED SURFACES NOT TO BE PAINTED, BUT PROTECTED BY OTHER SUITABLE METHODS.
3. STEEL STAMP or ELECTRO-ETCH PART NUMBER, P.O. NUMBER & VENDOR I.D. CODE ON PART WITH 25mm MIN. CHARACTERS.

PROPRIETARY NOTICE
The information disclosed herein, is the sole property of The Robbins Company, and shall not be disclosed in full or part, used by or disclosed to any other party without prior written consent of The Robbins Company. By accepting this information, recipient agrees to abide in kind with the foregoing, without any modification whatsoever to the conditions. This material is on loan only, and is to be returned upon request to The Robbins Company.

MACHINE	NEXT ASSY
EPB2016-376	1002834
EPB2013-377	

UNLESS NOTED ALL DIMS ARE mm
TOLERANCES UNLESS NOTED

0-300	±1.5	X	±1.5
300-1500	±3	X.X	±1.0
1500-6000	±6	X.XX	±.40
6000+	±12	X.XXX	±.100
		ANGLES	±1°
		SURFACE	3.2
		FINISH	

THIRD ANGLE PROJECTION
DIMENSIONS (X) ARE REF
ALL GEOMETRIC DIMENSIONING & TOLERANCING PER ANSI Y14.5-2009

REV	DESCRIPTION	REV'D BY / DATE	APP'D BY / DATE

TITLE: CASING, MACHINING

SIZE: D | 1036113 | REV: 0 | SHT 1 OF 3 | SCALE: SEE DETAIL | DO NOT SCALE

DRAWN BY: G.ANDERSON | DATE: 1/18/12 | CHECKED STANDARDS: R.FINE | CHECKED DESIGN: J.HEINEMAN

WEIGHT TOTAL: 5831.7 kg | APPROVED BY: J.HEINEMAN | DATE: 1/25/12

Robbins

www.TheRobbinsCompany.com

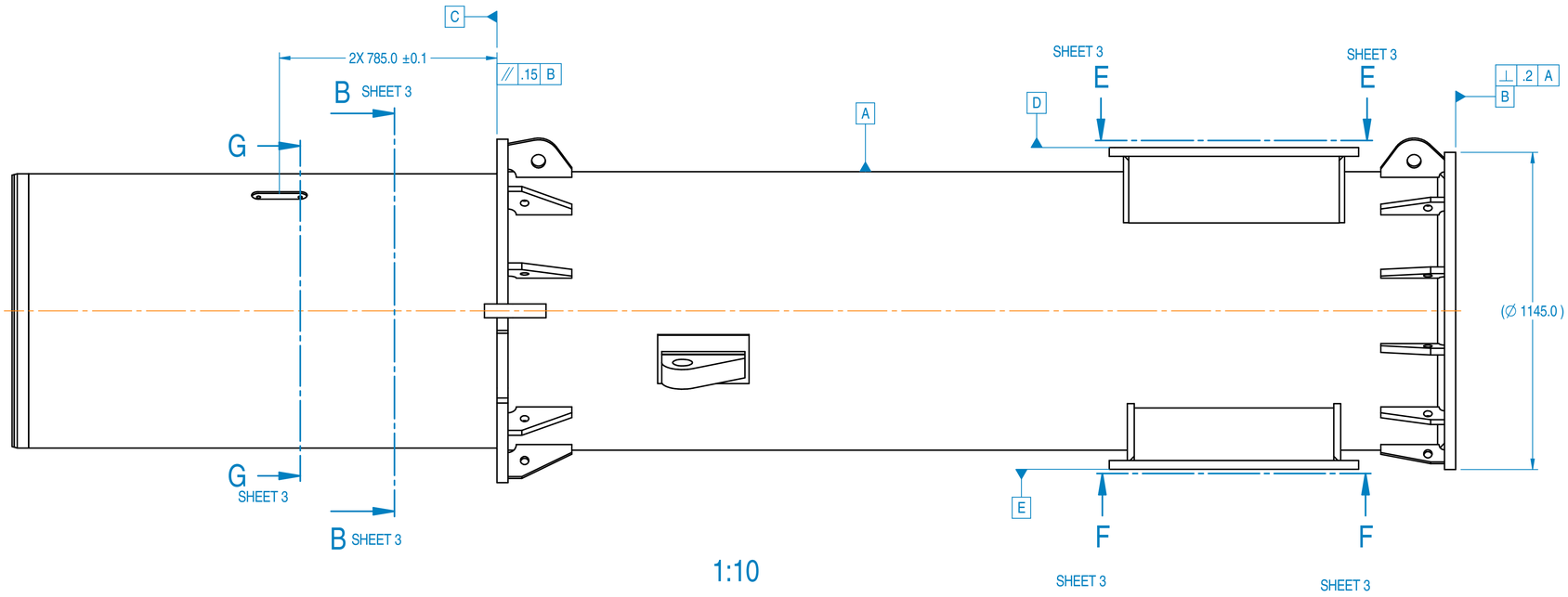

1:10

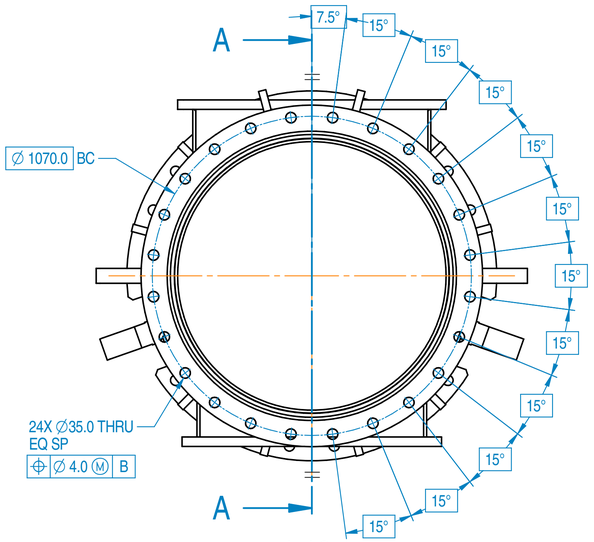

1:10

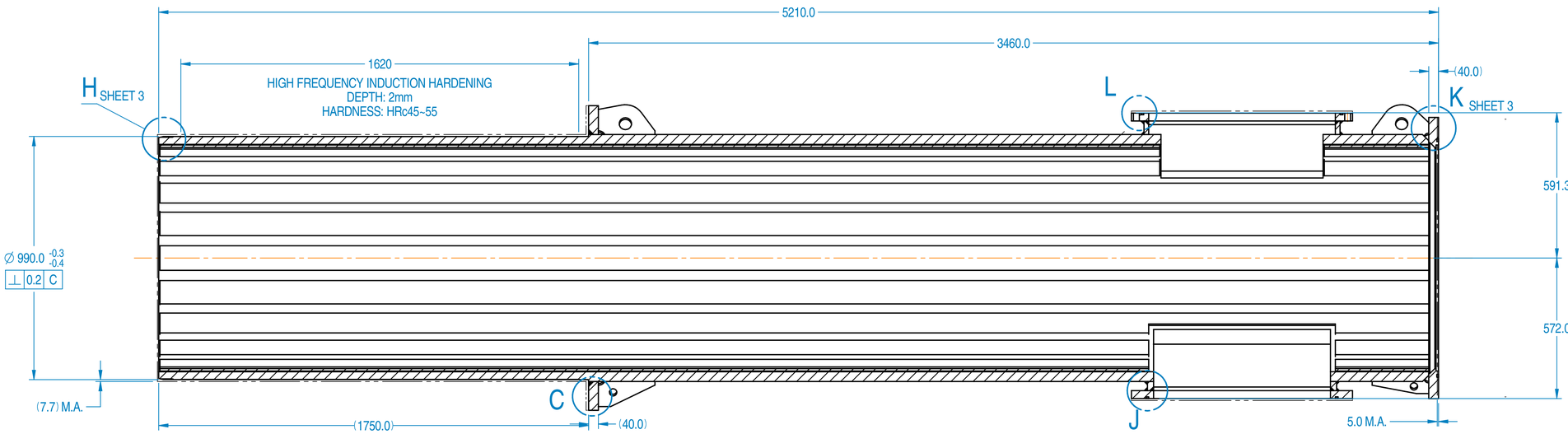

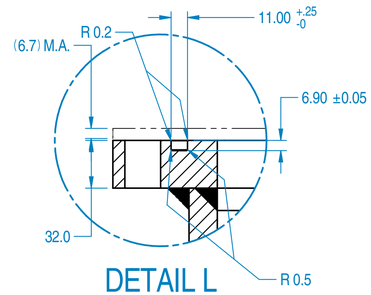

DETAIL L
1:2

SECTION A-A
1:10

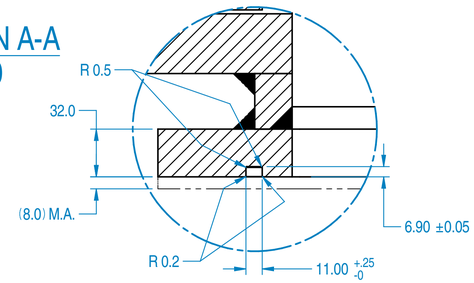

DETAIL J
1:2

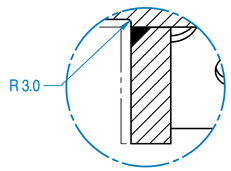

DETAIL C
1:3

PROPRIETARY NOTICE
This information disclosed herein, is the sole property of Robbins. Disclosure, publication, or duplication of any of it shall not be duplicated in full or part, used by, or disclosed to any other party without the express written consent of Robbins. By accepting this information, recipient agrees to all above restrictions and shall indemnify Robbins against whatsoever in the conditions. This material is on loan only, and shall be returned upon request.

MACHINE	NEXT ASSY
EPB2016-376	1002834
EPB2013-377	

UNLESS NOTED ALL DIMS ARE mm

TOLERANCES UNLESS NOTED

0-300	±1.5	X	±1.5
300-1500	±3	X.X	±1.0
1500-6000	±6	X.XX	±.40
6000+	±12	X.XXX	±.100
		ANGLES	±1°
		SURFACE FINISH	125

THIRD ANGLE PROJECTION

DIMENSIONS (X) ARE REF

ALL GEOMETRIC DIMENSIONING & TOLERANCING PER ANSI Y14.5-2009

REV	DESCRIPTION	REV'D BY: DATE	APP'D BY: DATE
0			

TITLE: CASING, MACHINING

SIZE: D | 1036113 | REV: 0 | SHT: 2 OF 3 | SCALE: SEE DETAIL

DO NOT SCALE

DRAWN BY: G.ANDERSON
DATE: 1/16/12
CHECKED STANDARDS: R.FINE
CHECKED DESIGN: J.HEINEMAN
WEIGHT TOTAL: 5831.7 kg
APPROVED BY: J.HEINEMAN
DATE: 1/25/12

Robbins

www.TheRobbinsCompany.com

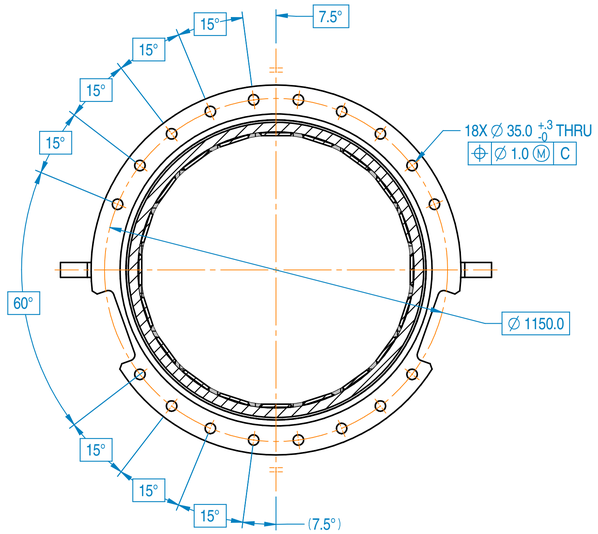

SHEET 2 - SECTION B-B
1:10

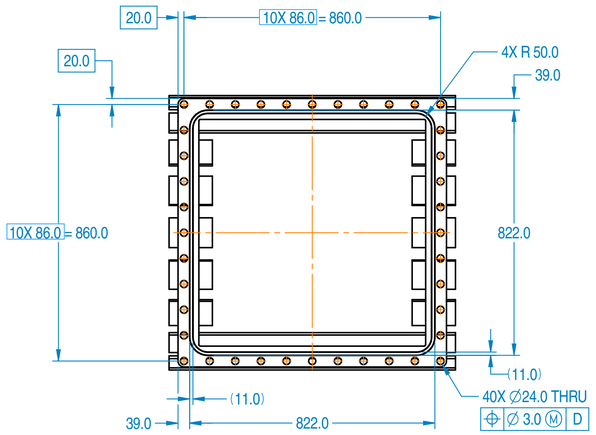

SECTION E-E
1:10

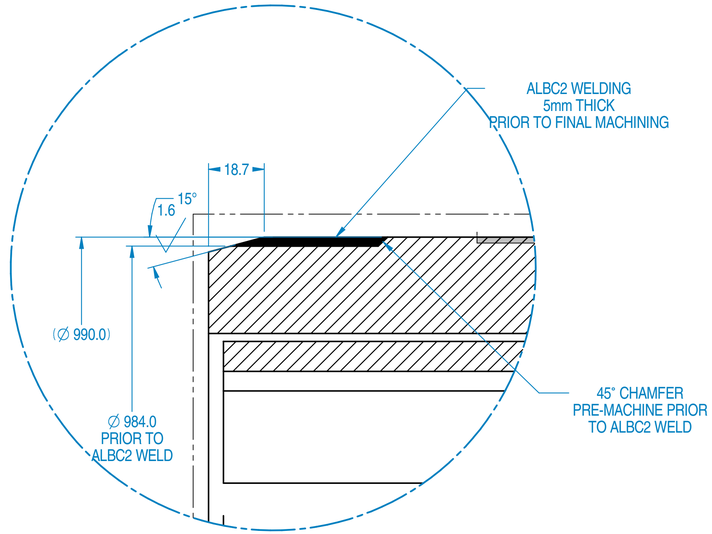

SHEET 2 - DETAIL H
1:1

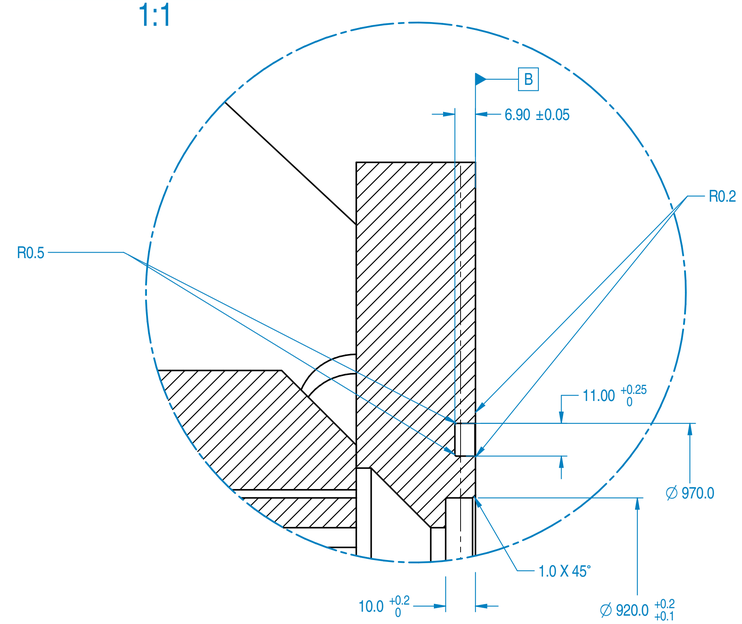

SHEET 2 - DETAIL K
1:1

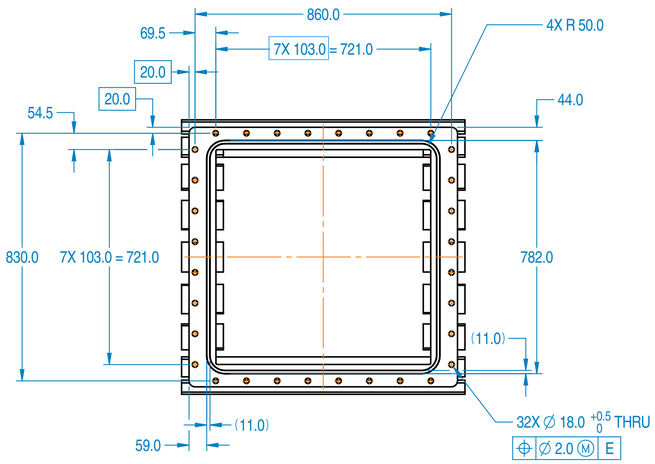

SHEET 2 - SECTION F-F
1:10

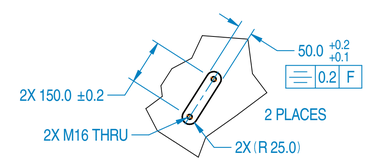

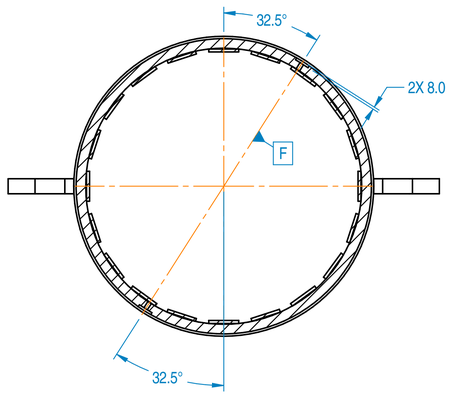

SHEET 2 - SECTION G-G
1:10

PROPRIETARY NOTICE
The information disclosed herein, is the sole property of The Robbins Company, and remains the sole property. It shall not be duplicated in full or part, used by or disclosed to any other party without prior written consent of The Robbins Company. By accepting this information, recipient agrees to abide in the fact that this information, without any implication whatsoever to the conditions. This material is on loan only, and is to be returned upon request to The Robbins Company.

MACHINE	NEXT ASSY
EPB2016-376	1002834
EPB2013-377	

UNLESS NOTED ALL DIMS ARE mm
TOLERANCES UNLESS NOTED

0-300	±1.5	X	±1.5
300-1500	±3	X.X	±1.0
1500-6000	±6	X.XX	±.40
6000+	±12	X.XXX	±.100
		ANGLES	±1°
		SURFACE FINISH	3.2

THIRD ANGLE PROJECTION
DIMENSIONS (X) ARE REF
ALL GEOMETRIC DIMENSIONING & TOLERANCING PER ANSI Y14.5-2009

REV	DESCRIPTION	REV'D BY/ DATE	APP'D BY/ DATE

TITLE: CASING, MACHINING

SIZE: D | 1036113 | REV: 0 | SHT 3 OF 3 | SCALE: SEE DETAIL | DO NOT SCALE

DRAWN BY: G.ANDERSON | DATE: 1/18/12 | CHECKED STANDARDS: R.FINE | CHECKED DESIGN: J.HEINEMAN

WEIGHT TOTAL: 5831.7 kg | APPROVED BY: J.HEINEMAN | DATE: 1/25/12

Robbins

www.TheRobbinsCompany.com

MODEL EPB2016-376/377
SECTION 11 • Segment Erector Assembly

1. Segment erector assembly drawing
2. Erector extension arrangement
3. Lifting stud
4. Lifting stud & Segment insert calculations
5. Key segment installation layout

November 6, 2012

Barnard Impregilo Healy JV
460th Fourth Street
San Francisco, CA 94107

Subject: TBMs

Re: Segment Interface With TBMs

Dear Mr. Tricamo,

This letter is to confirm that the segment geometry and applicable design features selected by BIH JV have been reviewed and taken into consideration during the design and manufacturing of the two EPB TBMs for the Central Subway Project. Each TBM and backup system is compatible with both nominal width segments.

Sincerely,

Jesse Heineman
Project Engineer

The Robbins Company - 29100 Hall Street, Solon, OH 44139 USA T: +1-440-248-3303 F: +1-440-248-1702
Solon, OH • Kent, WA • Oak Hill, WV • China • India • Germany • Spain • Italy • Mexico • Hong Kong • Romania

NOTE:

1. ADJUST SHIMS SO THAT GAPS BETWEEN ROTATING RING AND RADIAL ROLLERS SHAL BE AS FOLLOWING: RIGHT AND LEFT: FROM 2 TO 3 mm, TOP AND BOTTOM: FROM 3 TO 4 mm.
2. BACKLASH BETWEEN RING GEAR AND PINION SHALL BE FROM 3 TO 3.5 mm.
3. INSTALL THE LOCK BAR (2X) (EXTENSION SHAFT AND CASING RETAINER) FOR TRANSPORTATION ONLY.
4. TIGHTENING TORQUE OF BOLTS SHALL BE IN ACCORDANCE WITH ROBBINS STANDARD 5750 990 17 UNLESS NOTED OTHERWISE.

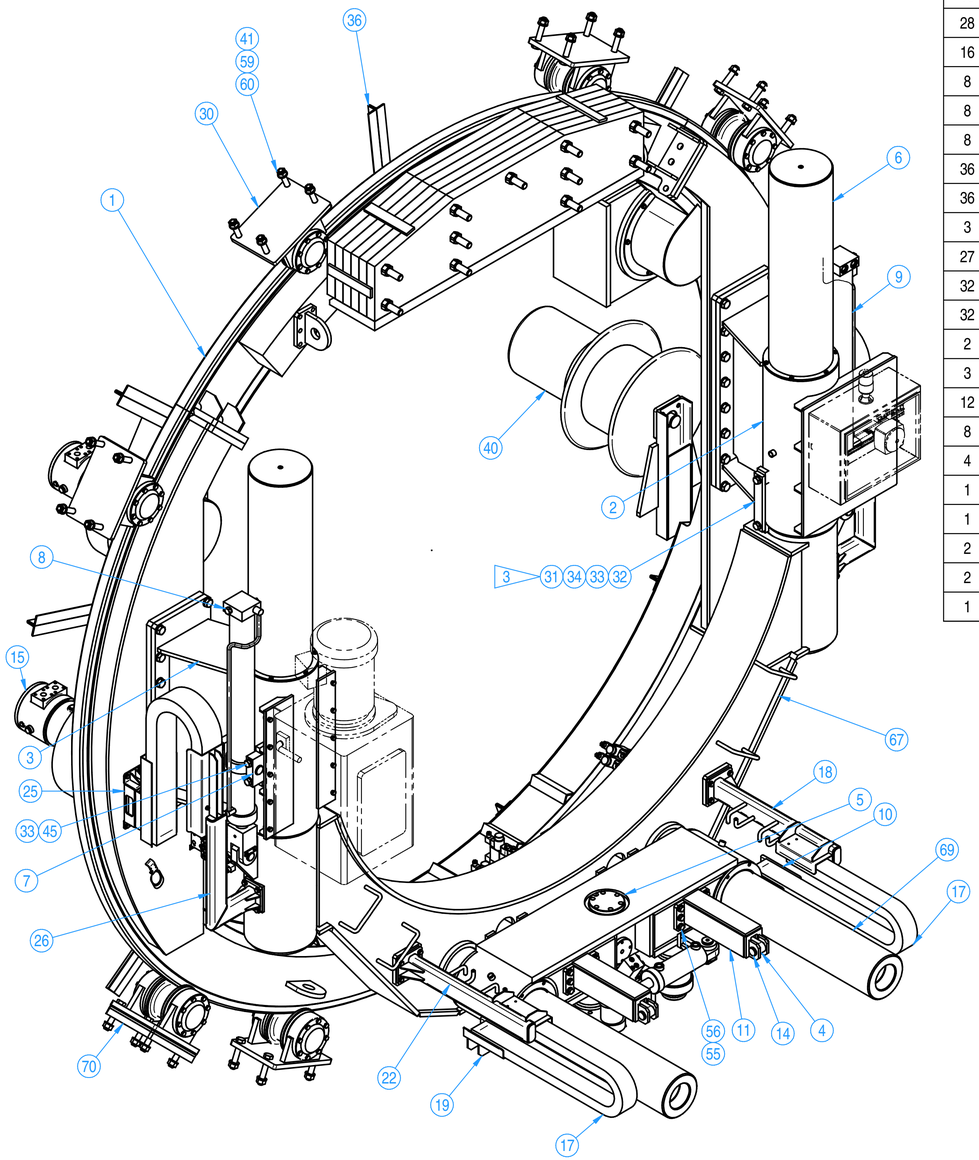

QTY	PART No.	DESCRIPTION	DWG No.	WT. Total	ITEM
1	D121638-1	COVER ROTATION RING, ERECTOR	D121638	146.4 kg	36
3	B360038-1	ERCR,m18 Z13 PINION MX250-RG	B360038	108.9 kg	37
3	A360050-1	RETAINER PLATE, PINION	A360050	1.5 kg	38
3	A360093-1	TONGUE WASHER, ERECTOR	A360093	0.0 kg	39
1	D118349-1	CABLE REEL INSTALLATION, ERECTOR	D118349	119.8 kg	40
64	A22158-7	WASHER, HD NW OD M24	A22158	2.1 kg	41
32	A22152-70605	HHCS, M24x60mm C8.8	A22152	11.0 kg	42
34	A22158-2	WASHER, HD NW OD M8	A22158	0.1 kg	43
12	A22152-20305	HHCS, M8x30mm C8.8	A22152	0.2 kg	44
8	A22152-61105	HHCS, M20x110mm C8.8	A22152	2.8 kg	45
22	A22152-20205	HHCS, M8x20mm C8.8	A22151	0.3 kg	46
14	A22154-25	NUT, M8 G8	A22154	0.1 kg	47
10	A22152-40355	HHCS, M12x35mm G8.8	A22152	0.5 kg	48
10	A22154-45	NUT, M12 G8	A22154	0.2 kg	49
28	A22158-3	WASHER, HD NW OD M10	A22158	0.1 kg	50
16	A22152-30255	HHCS, M10x25mm C8.8	A22152	0.4 kg	51
8	A22152-10208	HHCS, M6x20mm C10.9	A22152	0.1 kg	52
8	A22158-1	WASHER, HD NW OD M6	A22158	0.0 kg	53
8	A22154-18	NUT, M6 G10	A22154	0.0 kg	54
36	A22158-5	WASHER, HD NW OD M16	A22158	0.5 kg	55
36	A22152-50505	HHCS, M16x50mm C8.8	A22152	4.2 kg	56
3	A360020-1	ERECTOR KNOCK PIN FOR MOTOR	A360020	0.3 kg	57
27	A22152-60505	HHCS, M20x50mm C8.8	A22152	5.4 kg	58
32	A22152-71305	HHCS, M24x130mm C8.8	A22152	18.9 kg	59
32	A22154-75	NUT, M24 G8	A22154	3.7 kg	60
2	651-220	GREASE FITTING, 1/8" NPT		0.0 kg	61
3	B360012-1	PIN COVER, ERECTOR	B360012	21.9 kg	62
12	A22152-30165	HHCS, M10x16mm C8.8	A22152	0.2 kg	63
8	615-149	SHSS, M8x12mm CONE PT		0.0 kg	64
4	1035284	BUSHING, EXTENSION	1035284	63.1 kg	65
1	1036464	SLIDE AXIS EXTENSION ARRANGEMENT	1036464	98.0 kg	66*
1	1036310	CROSS BEAM MACHINING	1036310	1180.0 kg	67
2	1036326	RADIAL GUIDE TUBE	1036326	1039.5 kg	68
2	1036339	AXIAL GUIDE SHAFT	1036339	982.1 kg	69
1	1036505	ROLLER SHIM ARRANGMENT	1036505	40.1 kg	70

QTY	PART No.	DESCRIPTION	DWG No.	WT. Total	ITEM
1	D123044-1	RING, ERECTOR ROTATION	D123044	5714.0 kg	1
1	1035280	EXTENSION CASING R MACHINING	1035280	394.0 kg	2
1	1035255	EXTENSION CASING L MACHINING	1035255	393.9 kg	3
2	1034395	ERECTOR SLIDE CYLINDER	1034395	63.6 kg	4
1	1034405	GRIP ASSEMBLY, ERECTOR	1034405	957.4 kg	5
2	1035085	COVER, EXTENSION SHAFT MACHINING	1035085	102.9 kg	6
4	A360094-1	CYLINDER BEARING, ERECTOR	A360094	11.2 kg	7
1	1035091	LIFT CYLINDER	1035091	67.4 kg	8
1	1035384	LIFT CYLINDER W/SWITCH	1035384	67.4 kg	9
1	1034635	CARRIER BRACKET RIGHT	1034635	2.8 kg	10
2	1034637	SLIDE CYLINDER MNT, MACHINING	1034637	30.3 kg	11
2	1034666	PIN, SLIDE CYLINDER	1034666	0.9 kg	12
4	1034667	PIN KEEPER	1034667	0.2 kg	13
2	1034668	SHORT PIN, SLIDE CYLINDER	1034668	0.8 kg	14
3	B360108-1	HYDRAULIC MOTOR	B360108	753.6 kg	15
3	1034659	HYDRAULIC MOTOR MTG PLATE	1034659	60.9 kg	16
2	1034998	CABLE CARRIER, SLIDE	1034998	4.4 kg	17
1	1034722	CARRIER MOUNT, RIGHT	1034722	16.0 kg	18
1	1034766	CARRIER BRACKET LEFT	1034766	2.8 kg	19
1	D118568-1	EQUIPMENT LAYOUT,SEGMENT ERECTOR	D118568	87.0 kg	20*
2	B360112-1	PLATE, HYD MOTOR MOUNT	B360112	194.6 kg	21
1	1034769	CARRIER MOUNT, LEFT	1034722	16.0 kg	22
26	A22158-4	WASHER, HD NW OD M12	A22158	0.2 kg	23
22	A22152-40305	HHCS, M12x30mm C8.8	A22152	1.0 kg	24
2	1034771	RADIAL CARRIER BRACKET	1034771	7.1 kg	25
1	1034773	VERT CARRIER LEFT	1034765	18.4 kg	26
1	1034765	VERT CARRIER RIGHT	1034765	18.4 kg	27
2	1034770	RADIAL CARRIER MOUNT	1034770	8.7 kg	28
2	1035404	CABLE CARRIER, RADIAL	1035404	10.6 kg	29
8	B360023-1	ROLLER, ERECTOR	B360023	726.1 kg	30
4	1034779	LOCK PAD, EXTENSION SHAFT	1034779	2.1 kg	31
2	1034780	LOCK BAR, EXTENSION SHAFT	1034780	4.2 kg	32
39	A22158-6	WASHER, HD NW OD M20	A22158	0.9 kg	33
4	A22152-60455	HHCS, M20x45mm C8.8	A22152	0.7 kg	34
1	C121613-1	HYD MOTOR MOUNTING PLATE	C121613	142.1 kg	35

SEGMENT ERECTOR	
DESCRIPTION	SPECIFICATION
TYPE	RING GEAR TYPE
ROTARY SPEED	0.2 ~ 1.53 RPM
SEGMENT WEIGHT	APPROX. 37KN
LIFT (RADIAL) CYLINDER	110KN X 75KN X 1000s X 14MPa X 2no
SLIDE (AXIAL) CYLINDER	35KN X 34KN X 900s X 10.5MPa PISTON END X 20.6 MPa ROD END x 2no
PITCH/ROLL CYLINDERS	212KN X 84KN X 80s X 20.6MPa X 4no
YAW CYLINDER	110KN X 78KN X 100s X 20.6MPa 1no
HYDRAULIC MOTOR	1.613L/rev X 5.39KN-M X 21MPa X 3no
POWER UNIT FOR TURNING	55KW X 4p X 380V X 50Hz X 1no
	135L/min X 21MPa X 1no
POWER UNIT FOR EXTEN./SLIDE	11KW X 4p X 380V X 50Hz X 1no
	27L/min X 14MPa X 1no

PROPRIETARY NOTICE
The information disclosed hereon, is the sole property of The Robbins Company and is not to be used, copied or disclosed in whole or part, used by, or disclosed to any person, firm or corporation for any purpose whatsoever without the written permission of The Robbins Company. By accepting this information, recipient agrees to indemnify The Robbins Company for any loss or damage caused by unauthorized use. Unauthorized use shall be prosecuted to the fullest extent of the law.

REV	DESCRIPTION	REV'D BY / DATE	APP'D BY / DATE

MACHINE: EPB2111-372 | NEXT ASSY: 1036183

UNLESS NOTED ALL DIMS ARE mm

TOLERANCES UNLESS NOTED

10-300	±.1	X	±1.0
300-1500	±.3	X.X	±.12
1500-6000	±.6	X.XX	±.40
6000>	±.12	X.XXX	±.100
		ANGLES	±1°
		SURFACE FINISH	√

DIMENSIONS (X) ARE REF.

ALL GEOMETRIC DIMENSIONING & TOLERANCING PER ANSI Y14.5-2009

TITLE: SEGMENT ERECTOR ASSEMBLY

SIZE: D | DWG No.: 1036361 | REV: 0 | SHT 1 OF 6 | SCALE: SEE DETAIL

DO NOT SCALE

DRAWN BY: T. LANG | DATE: 02-29-12

CHECKED STANDARDS: K.WOHLWEND

CHECKED DESIGN: T.LANG

APPROVED BY: S.DRANEY | DATE: 03-14-12

WEIGHT TOTAL: 14131.3 kg

Robbins

www.TheRobbinsCompany.com

1036361

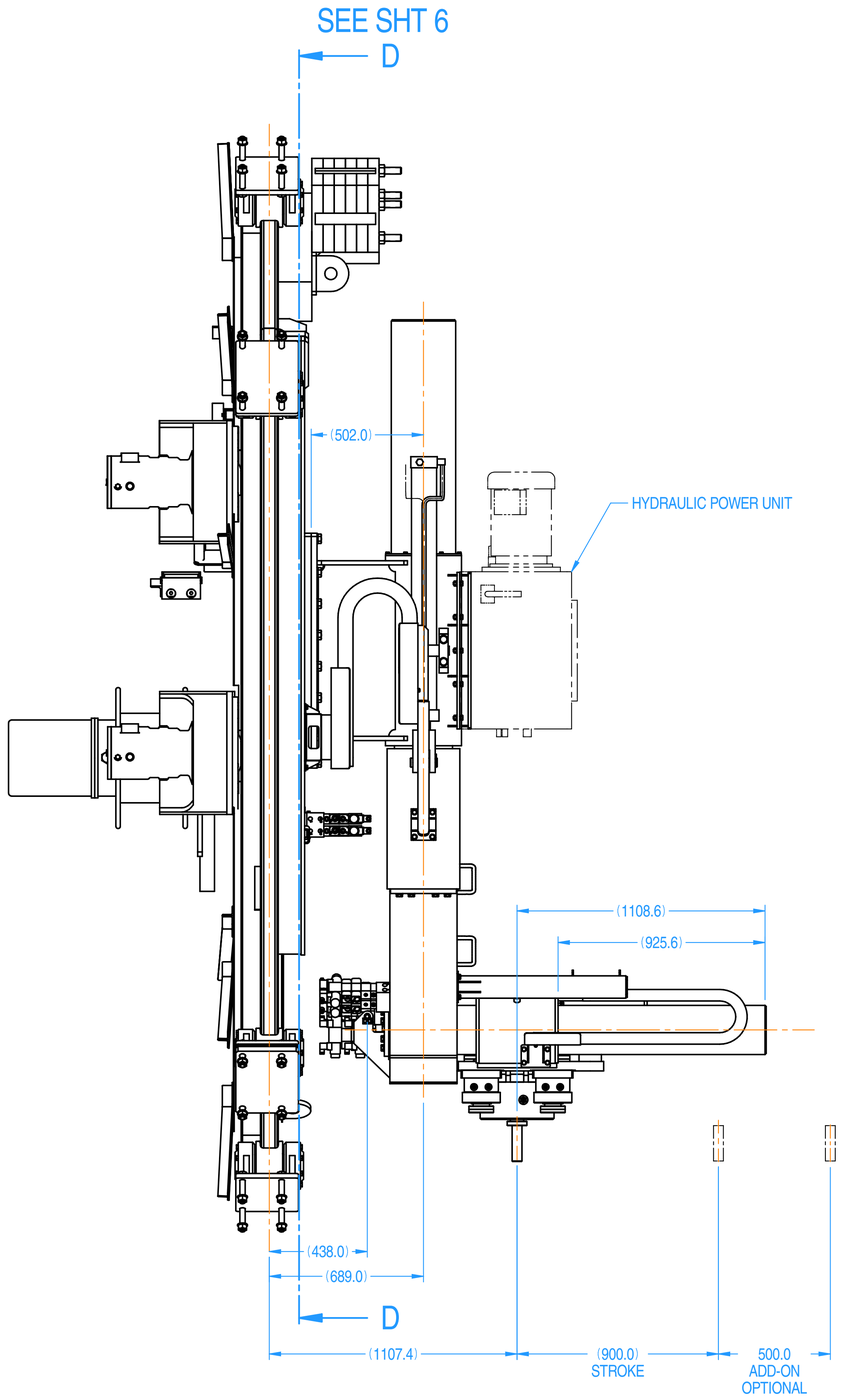

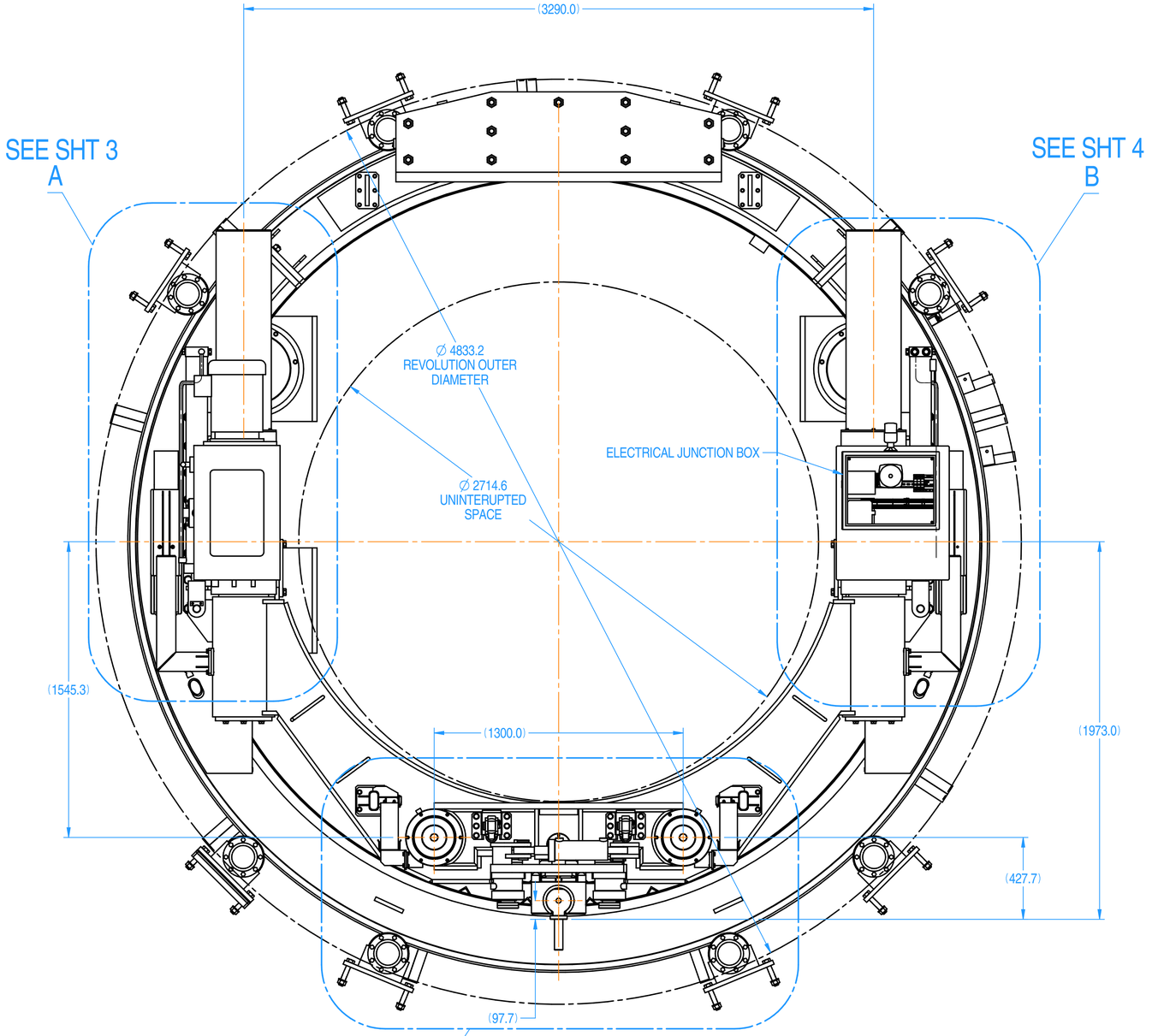

PROPRIETARY NOTICE
The information disclosed hereon, is the sole property of The Robbins Company and is not to be used, copied or loaned in whole or part, used for, or disclosed to any person or entity for any purpose without the written consent of The Robbins Company. By accepting this information, recipient agrees to indemnify and hold harmless The Robbins Company for any damages whatsoever to the conditions. This material is on loan only.

MACHINE	NEXT ASSY
EPB2111-372	1036183

UNLESS NOTED ALL DIMS ARE mm

TOLERANCES UNLESS NOTED

10-300	±1
300-1500	±3
1500-6000	±6
6000>	±12

X	±1.0
X.X	±1.0
X.XX	±.40
X.XXX	±.100
ANGLES	±1°
SURFACE FINISH	√

PERPENDICULAR PARALLEL

DIMENSIONS (X) ARE REF

ALL GEOMETRIC DIMENSIONING & TOLERANCING PER ANSI Y14.5-2009

REV	DESCRIPTION	REV'D BY / DATE	APP'D BY / DATE

TITLE: SEGMENT ERECTOR ASSEMBLY

SIZE	DWG No.	REV	SHT / OF	SCALE
D	1036361	0	2 / 6	SEE DETAIL

DO NOT SCALE

DRAWN BY: T. LANG
DATE: 02-29-12

CHECKED STANDARDS: K.WOHLWEND
CHECKED DESIGN: T.LANG

WEIGHT TOTAL: 14131.3 kg

APPROVED BY: S.DRANEY
DATE: 03-14-12

Robbins

www.TheRobbinsCompany.com

1036361

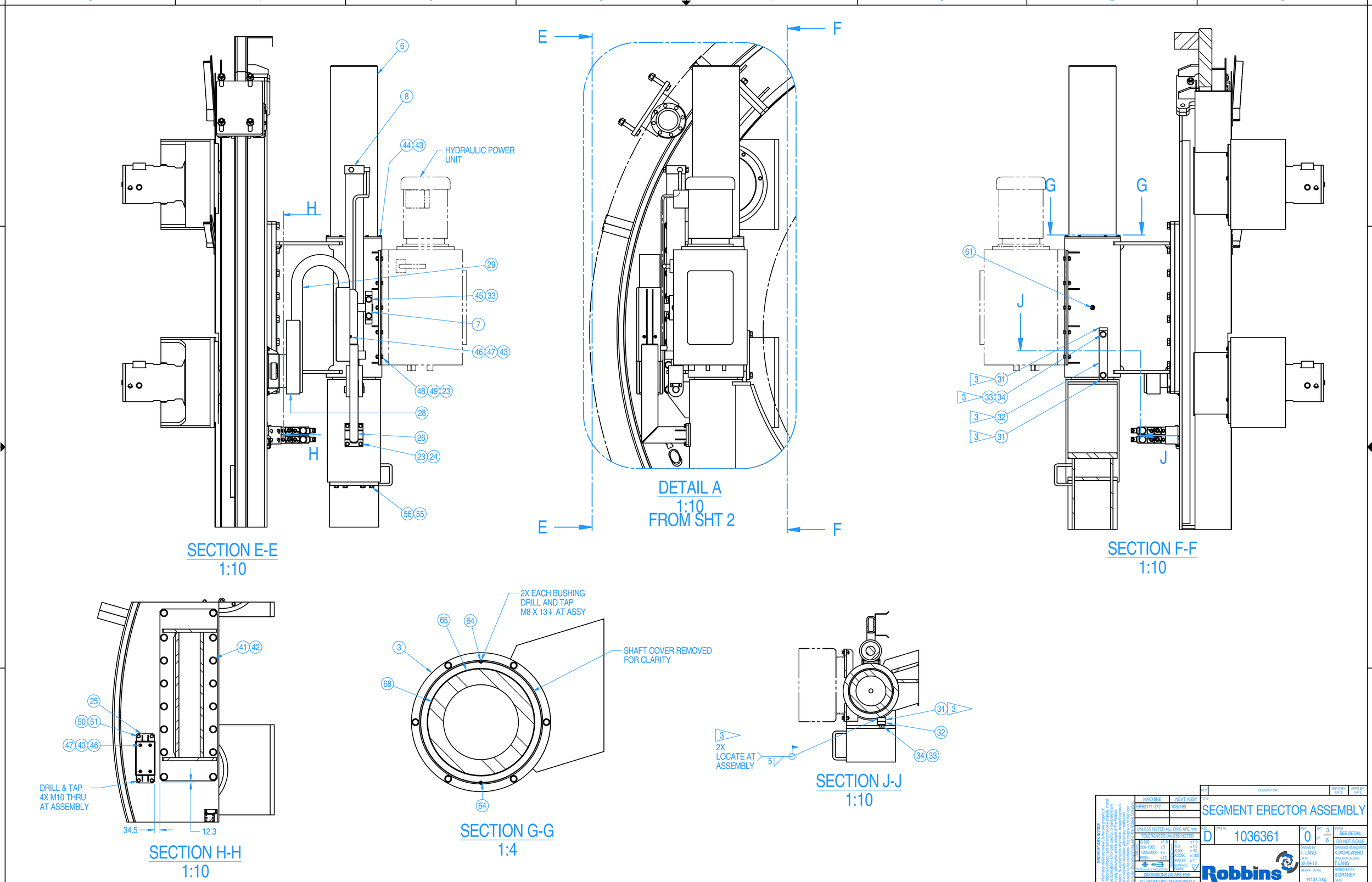

PROPRIETARY NOTICE

The information disclosed herein is the sole property of The Robbins Company, or remains the sole property of it shall not be duplicated in full or part, used by, or disclosed to any other party without prior written consent of The Robbins Company. By accepting this information, recipient agrees to abide in fact with the notice, without any implication whatsoever to the conditions. This material is on loan only, and is to be returned upon request to The Robbins Company.

MACHINE	NEXT ASSY
EPB2111-372	1036183

UNLESS NOTED ALL DIMS ARE mm

TOLERANCES UNLESS NOTED

0-300	±1.5	X	±1.5
300-1500	±3	X.X	±1.0
1500-6000	±6	X.XX	±.40
6000+	±12	X.XXX	±.100
		ANGLES	±1°
		SURFACE FINISH	3.2

THIRD ANGLE PROJECTION

DIMENSIONS (X) ARE REF

ALL GEOMETRIC DIMENSIONING & TOLERANCING PER ANSI Y14.5-2009

REV	DESCRIPTION	REV'D BY DATE	APP'D BY DATE

TITLE

SEGMENT ERECTOR ASSEMBLY

SIZE	DWG No.	REV	SHT	SCALE
D	1036361	0	3 OF 6	SEE DETAIL DO NOT SCALE

DRAWN BY T. LANG DATE 02-29-12

CHECKED STANDARDS K.WOHLWEND

CHECKED DESIGN T.LANG

WEIGHT TOTAL 14131.3 kg

APPROVED BY S.DRANEY DATE 03-14-12

Robbins

www.TheRobbinsCompany.com

1036361

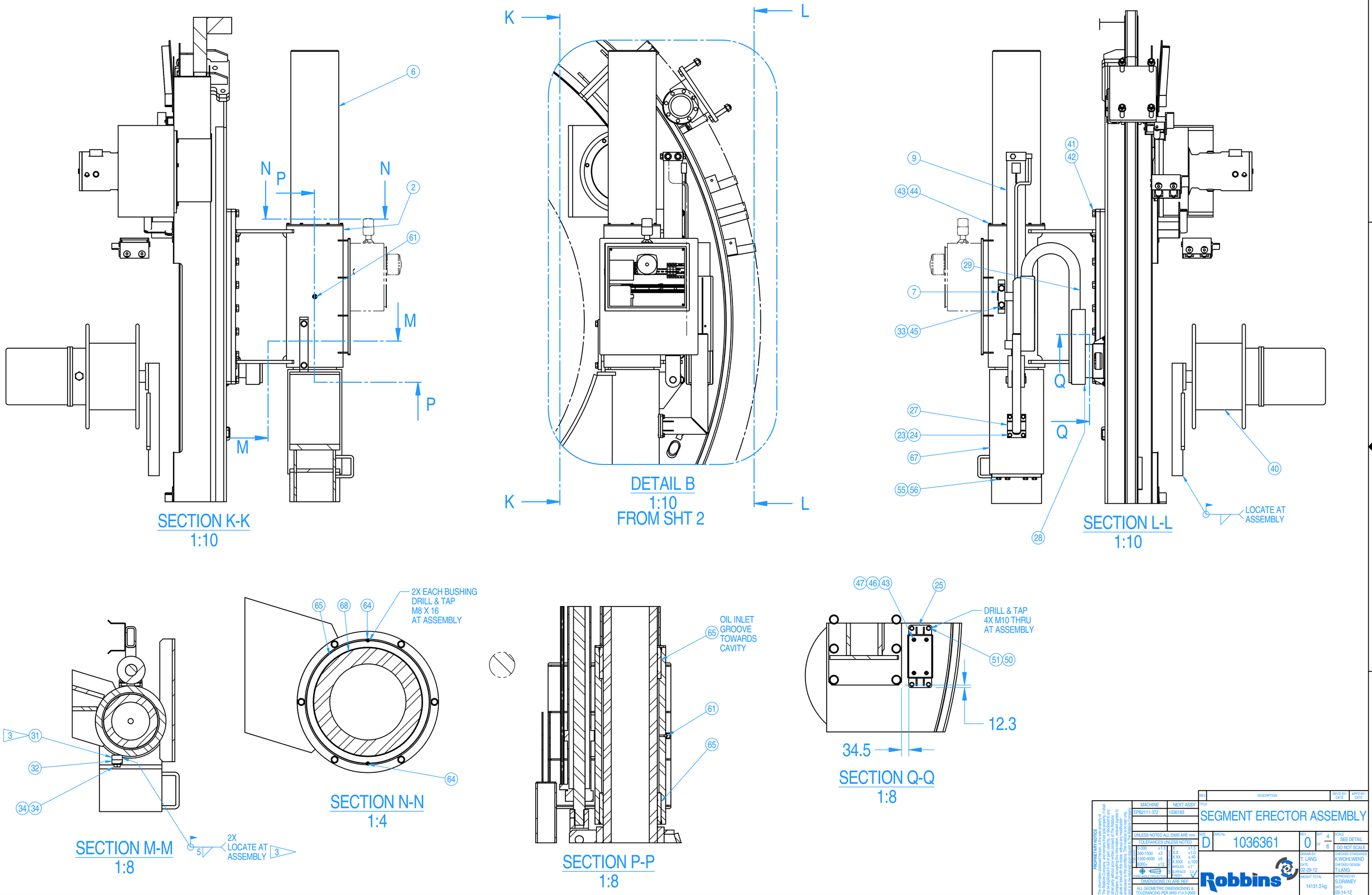

MACHINE	NEXT ASSY
EPB2111-372	1036183

UNLESS NOTED ALL DIMS ARE mm

TOLERANCES UNLESS NOTED

0-300	±1.5	X	±1.5
300-1500	±3	X.X	±1.0
1500-6000	±6	X.XX	±.40
6000+	±12	X.XXX	±.100
		ANGLES	±1°
		SURFACE FINISH	3.2

THIRD ANGLE PROJECTION

DIMENSIONS (X) ARE REF.

ALL GEOMETRIC DIMENSIONING & TOLERANCING PER ANSI Y14.5-2009

REV	DESCRIPTION	REV'D BY/ DATE	APP'D BY/ DATE

TITLE: SEGMENT ERECTOR ASSEMBLY

SIZE: D | DWG No. 1036361 | REV 0 | SHT 4 OF 6 | SCALE: SEE DETAIL

DO NOT SCALE

DRAWN BY: T. LANG | DATE: 02-29-12 | CHECKED STANDARDS: K.WOHLWEND | CHECKED DESIGN: T.LANG

WEIGHT TOTAL: 14131.3 kg | APPROVED BY: S.DRANEY | DATE: 03-14-12

Robbins

www.TheRobbinsCompany.com

PROPRIETARY NOTICE
The information disclosed herein is the sole property of The Robbins Company, and remains the sole property. It shall not be duplicated in full or part, used by, or disclosed to any other party without prior written consent of The Robbins Company. By accepting this information, recipient agrees to abide in fact with the notice, without any modification whatsoever to the conditions. This material is not to be copied, used or disclosed without the prior written consent of The Robbins Company.

1036361

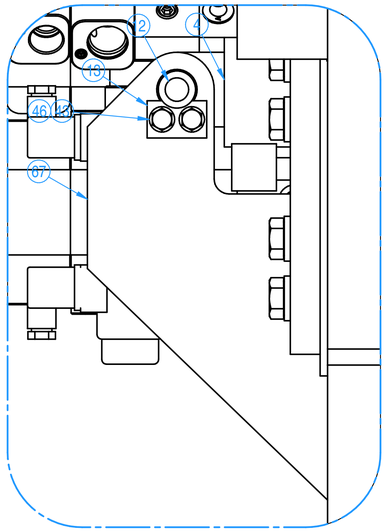

DETAIL U
1:2

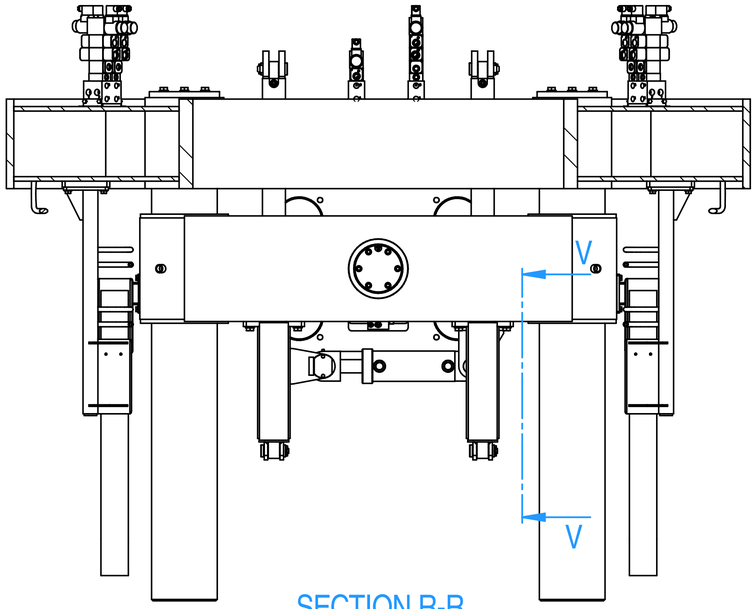

SECTION R-R
1:10

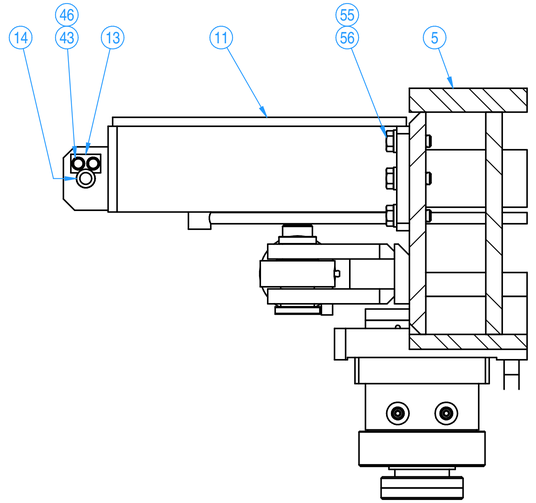

SECTION V-V
1:4
ROTATED
CW 90°

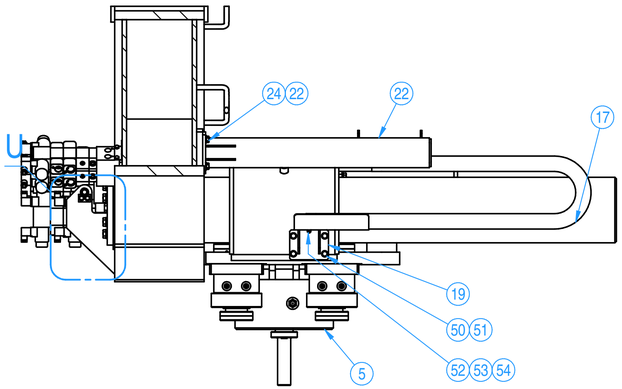

SECTION S-S
1:10

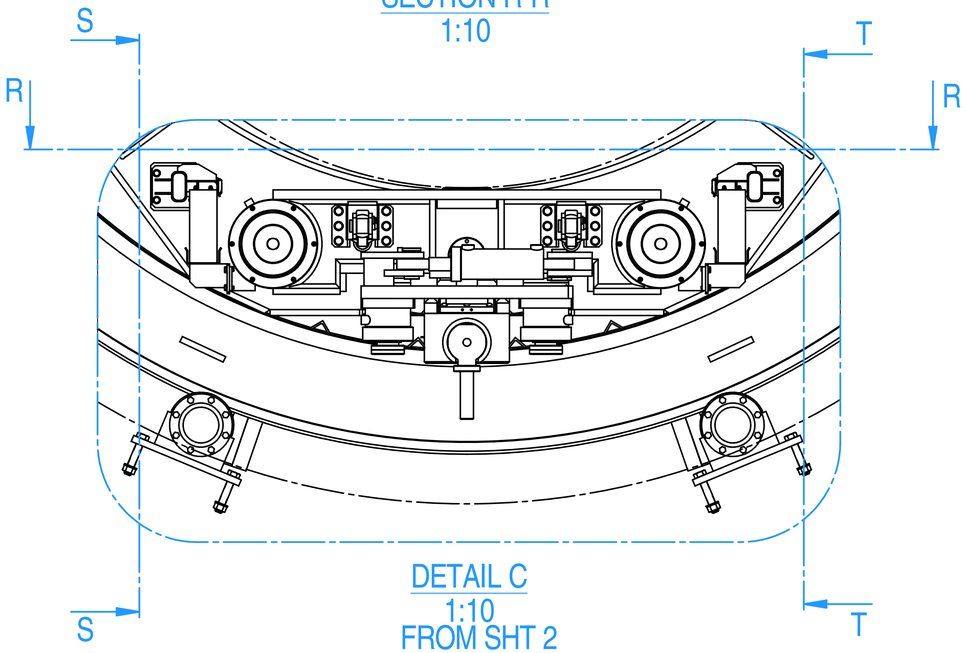

DETAIL C
1:10
FROM SHT 2

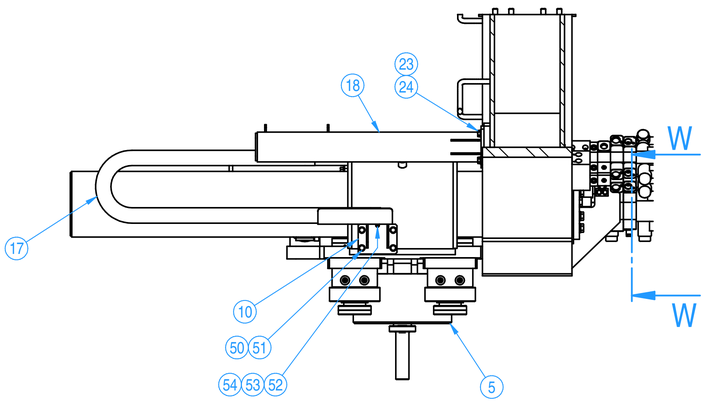

SECTION T-T
1:10

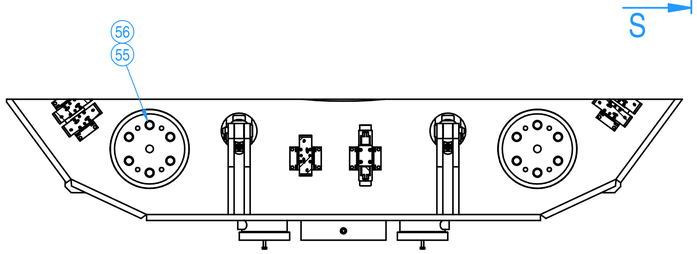

SECTION W-W
1:10

PROPRIETARY NOTICE
The information disclosed herein, is the sole property of The Robbins Company and is not to be used, copied, or shall not be duplicated in full or part, used by, or disclosed to any person for any purpose without the written permission of the Company. By accepting this information, recipient agrees to use the information only for the purpose specified by the Company and in accordance with the restrictions stated herein.

MACHINE	NEXT ASSY
EPB2111-372	1036183

UNLESS NOTED ALL DIMS ARE mm
TOLERANCES (UNLESS NOTED)

0-300	±1.5	X	±1.5
300-1500	±3	X.X	±1.0
1500-6000	±6	X.XX	±.40
6000+	±12	X.XXX	±.100
		ANGLES	±1°
		SURFACE FINISH	125

THIRD ANGLE PROJECTION
DIMENSIONS IXI ARE REF
ALL GEOMETRIC DIMENSIONING & TOLERANCING PER ANSI Y14.5-2009

REV	DESCRIPTION	REVD BY DATE	APP'D BY DATE

TITLE: SEGMENT ERECTOR ASSEMBLY

SIZE	DWG No.	REV	SHT	SCALE
D	1036361	0	5 of 6	SEE DETAIL

DO NOT SCALE

DRAWN BY: T. LANG
DATE: 02-29-12
CHECKED DYNAMATION: K.WOHLWEND
CHECKED DESIGN: T.LANG
WEIGHT TOTAL: 14131.3 kg
APPROVED BY: S.DRANEY
DATE: 03-14-12

Robbins
www.TheRobbinsCompany.com

1036361

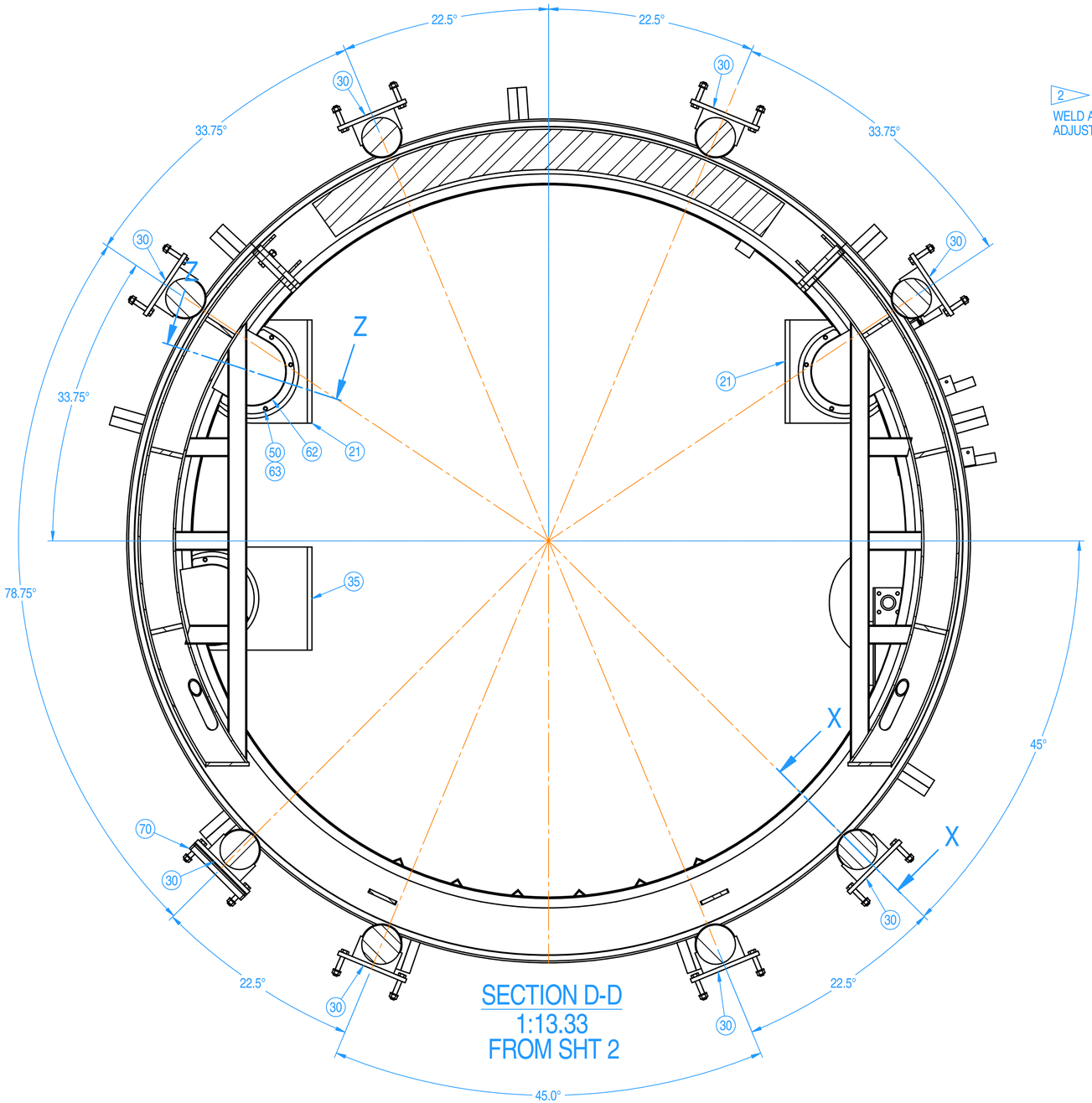

SECTION D-D
1:13.33
FROM SHT 2

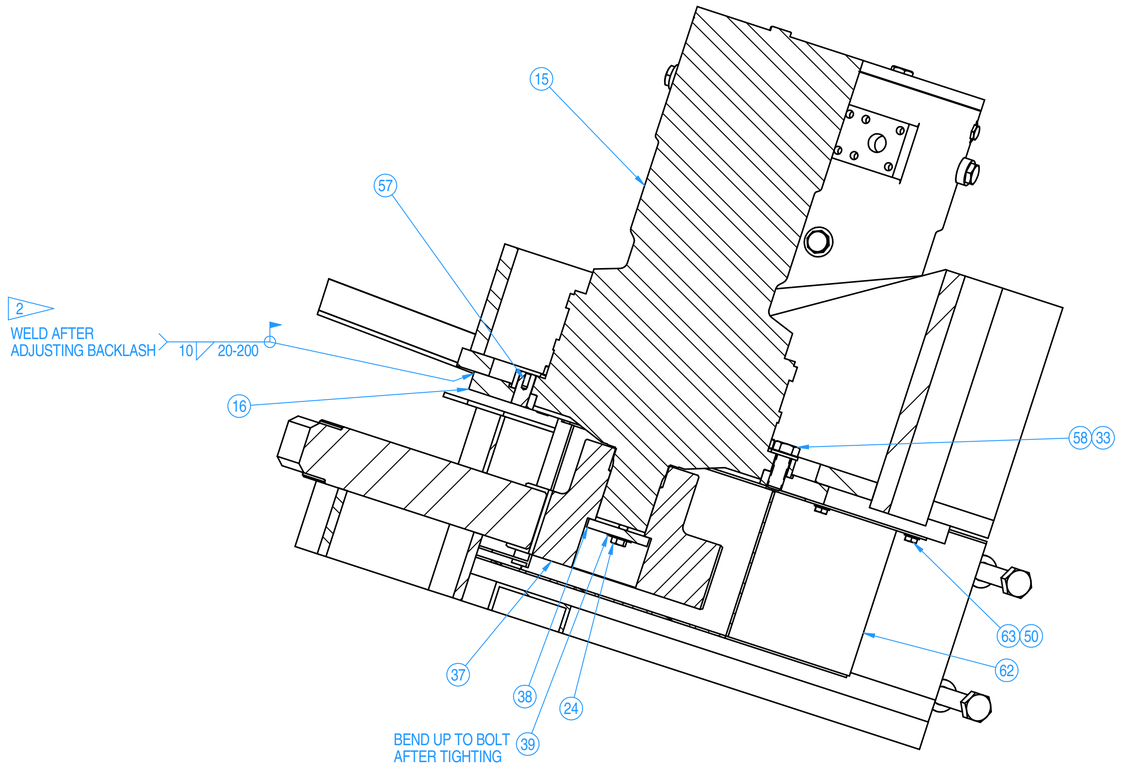

SECTION Z-Z
1:4

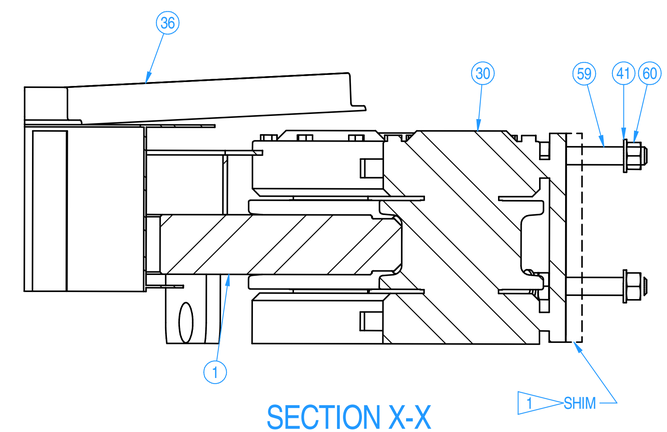

SECTION X-X
1:4

PROPRIETARY NOTICE
The information disclosed herein is the sole property of The Robbins Company, and shall not be disclosed in whole or in part, used by, or disclosed to any other party without written consent of The Robbins Company. By accepting this information, recipient agrees to abide by the terms of this notice, without any modification or whatsoever to the conditions. This material is on loan only, and is to be returned upon request to The Robbins Company.

MACHINE	NEXT ASSY
EPB2111-372	1036183

UNLESS NOTED ALL DIMS ARE mm
TOLERANCES UNLESS NOTED

0-300	±1.5	X	±1.5
300-1500	±3	X.X	±1.0
1500-6000	±6	X.XX	±.40
6000+	±12	X.XXX	±.100
		ANGLES	±1°
THIRD ANGLE PROJECTION		SURFACE FINISH	3.2

DIMENSIONS (X) ARE REF.
ALL GEOMETRIC DIMENSIONING & TOLERANCING PER ANSI Y14.5-2009

REV	DESCRIPTION	REV'D BY DATE	APP'D BY DATE

TITLE
SEGMENT ERECTOR ASSEMBLY

SIZE	DWG No.	REV	SHT	SCALE
D	1036361	0	6 OF 6	SEE DETAIL DO NOT SCALE

DRAWN BY T. LANG DATE 02-29-12
CHECKED STANDARDS K.WOHLWEND
CHECKED DESIGN T.LANG
WEIGHT TOTAL 14131.3 kg
APPROVED BY S.DRANEY DATE 03-14-12

Robbins
www.TheRobbinsCompany.com

1036361

QTY	PART No.	DESCRIPTION	DWG No.	WT. Total	ITEM
2	1036344	CYLINDER MOUNT MACHINING	1036344	15.1 kg	1
10	A22158-5	WASHER, HD NW OD M16	A22158	0.2 kg	3
10	A22152-50505	HHCS, M16x50mm C8.8	A22152	1.2 kg	4
2	1034987	SLIDE EXTENSION SHAFT	1034987	67.9 kg	5
2	1035026	TENSION STUD	1035026	11.6 kg	6
2	1035028	MJT	1035028	2.1 kg	7

NOTES:

1. TORQUE FASTENERS PER DRAWING 5750 9900 17 UNLESS OTHERWISE NOTED.
2. ADDITIONAL STRUCTURE SHOWN FOR REFERENCE ONLY

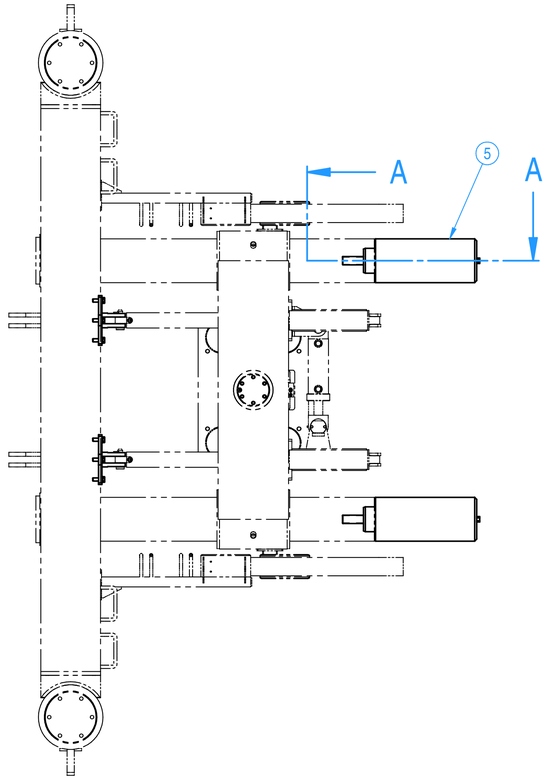

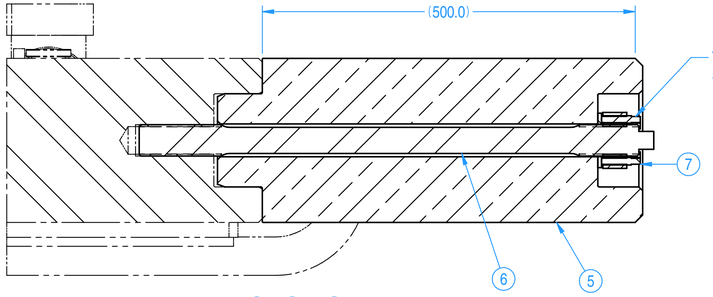

SECTION A-A
1:4

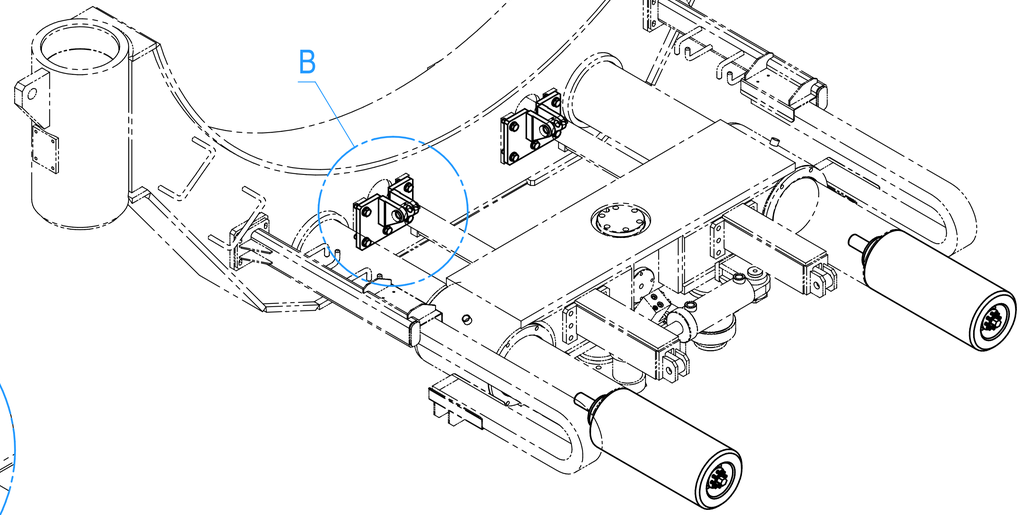

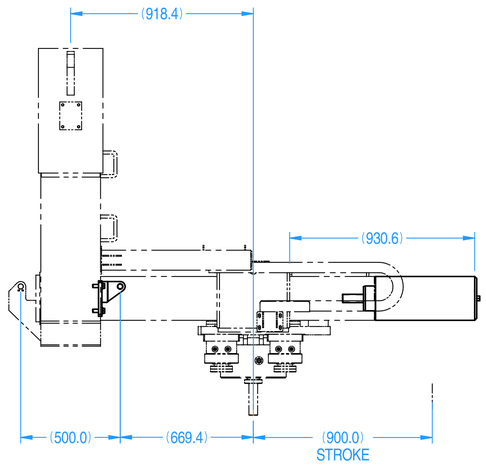

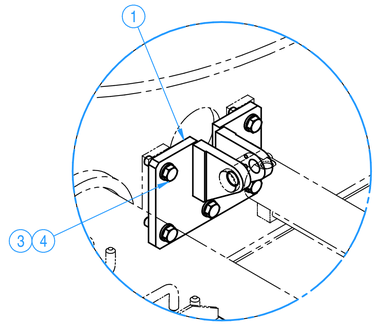

DETAIL B
1:5

TRC P/N 1036464
SLIDE AXIS EXTENSION ARRANGEMENT
ISOMETRIC VIEW
1:10

PROPRIETARY NOTICE
This information disclosed hereon, is the sole property of The Robbins Company and shall not be used, copied, or disclosed to a third party without the written permission of The Robbins Company. By accepting this information, recipient agrees to use it only for the purpose for which it is intended and to return it upon request. Any reproduction in whole or in part is prohibited.

MACHINE	NEXT ASSY
EPB211-372	1036361
373-375	

UNLESS NOTED ALL DIMS ARE mm
TOLERANCES UNLESS NOTED

0-300	±.5
300-1500	±3
1500-6000	±6
6000+	±12

X	±1.2
X.X	±1.0
X.XX	±.40
X.XXX	±.100
ANGLES	±1°
SURFACE FINISH	√

CHAMFER ANGLE IND (X) DIM
DIMENSIONS (X) ARE REF
ALL GEOMETRIC DIMENSIONING & TOLERANCING PER ANSI Y14.5-2009

REV	DESCRIPTION	REVD BY / DATE	APPD BY / DATE

TITLE: SLIDE AXIS EXTENSION ARRANGEMENT

SIZE	DWG No.	REV	SHT	SCALE
D	1036464	0	1 OF 1	SEE DETAIL

DO NOT SCALE

DRAWN BY	CHECKED STANDARDS
T.LIANG	K.WOHLWEND
DATE	CHECKED DESIGN
02-24-12	T.LANG
WEIGHT TOTAL	APPROVED BY
98.0 kg	S.DRANEY
	DATE
	03-04-12

Robbins
www.TheRobbinsCompany.com

1036464

NOTES:

1. TORQUE ALL FASTENERS PER ROBBINS SPEC 5750 9900 17 UNLESS OTHERWISE NOTED

2 APPLY THREAD LOCK (LOCTITE # 242) AND TORQUE FASTENER PER ROBBINS SPEC 5750 9900 17

3 APPLY GREASE (NLGI GRADE 2) DURRING ASSEMBLY

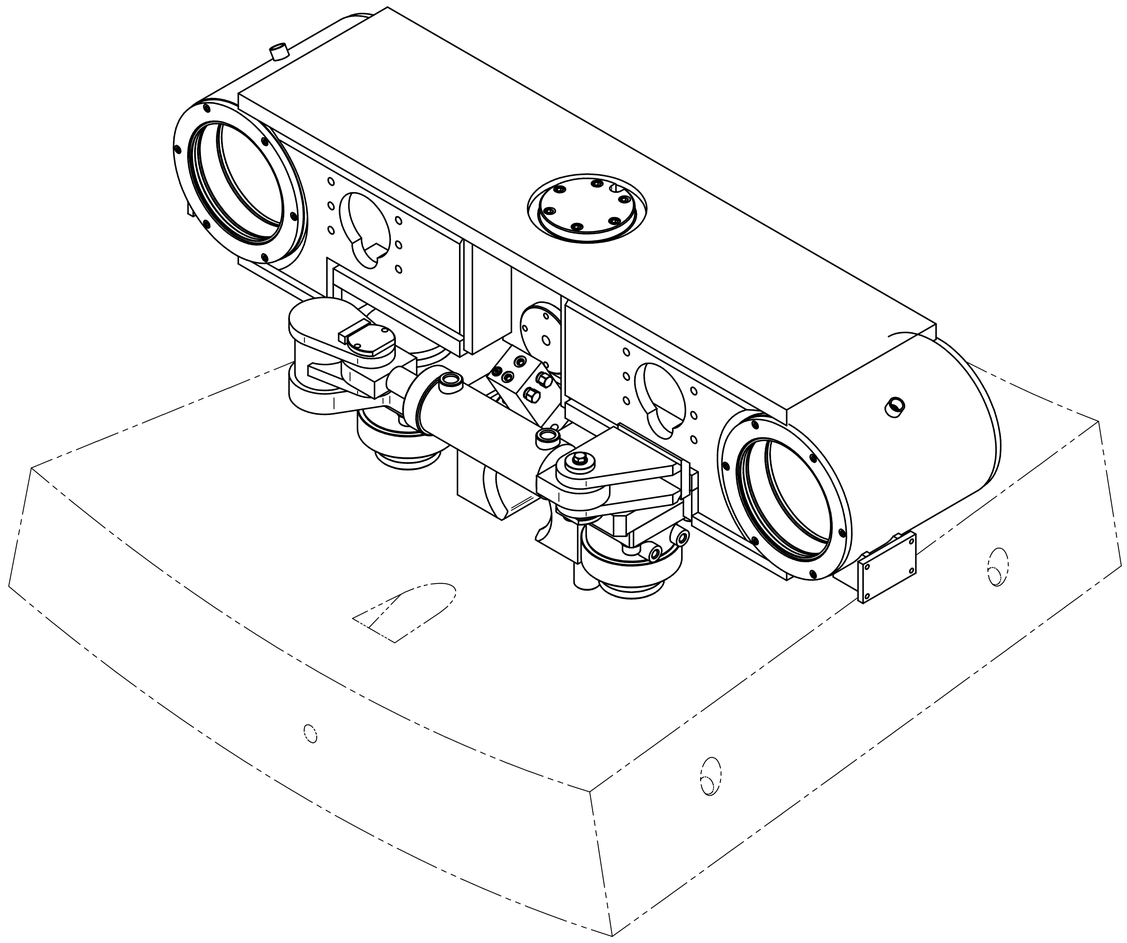

QTY	PART No.	DESCRIPTION	DWG No.	WT. Total	ITEM
1	1034407	UPPER GRIP-MACHINING	1034407	482.7 kg	1
1	1034411	LOWER GRIP-MACHINING	1034411	171.4 kg	2
4	1034433	PITCH/ROLL CYLINDER	1034433	125.8 kg	3
1	C103083-1	YAW CYLINDER	C103083	17.8 kg	4
2	1034386	CYL PIN, SPACER	1034386	0.1 kg	5
2	1034387	CYLINDER PIN	1034387	2.4 kg	6
4	1034388	FOOT, ERECTOR	1034388	4.5 kg	7
2	1034393	WASHER, CYL PIN	1034393	0.3 kg	8
1	D122661-080	BEARING, SPHERICAL Ø80mm X 130mm	D122661	3.5 kg	9
1	1034415	SPACER, BEARING	1034415	0.2 kg	10
1	1034414	PIN, BEARING	1034414	7.8 kg	11
1	1034417	RETAINER, WASHER	1034417	1.3 kg	12
1	1034420	RETAINER PLATE, BEARING	1034420	0.7 kg	13
1	D65170-070	BEARING, SPHERICAL Ø70mmx105mmOD	D65170	0.3 kg	14
1	1034427	RETAINER, BEARING	1034427	2.1 kg	15
4	B360048-1	ERECTOR DUST SEAL RETAINER	B360048	10.5 kg	16
4	A360101-1	ERECTOR DUST SEAL (DSI TYPE)	A360101	1.4 kg	17
4	B360100-2	ERECTOR SLIDE BUSH	B360100-2	21.4 kg	18
1	1034684	LATCH ASSEMBLY	1034684	117.2 kg	19
16	A22158-6	WASHER, HD NW OD M20	A22158	0.4 kg	20
16	A22153-60708	SHCS, M20x70mm G10.9	A22153	4.2 kg	21
16	A22153-30208	SHCS, M10x20mm G10.9	A22153	0.4 kg	22
8	A22158-4	WASHER, HD NW OD M12	A22158	0.1 kg	23
2	A22152-40358	HHCS, M12x35mm C10.9	A22152	0.1 kg	24
6	A22152-40508	HHCS, M12x50mm C10.9	A22152	0.4 kg	25
6	A22153-40258	SHCS, M12x25mm G10.9	A22153	0.3 kg	26
24	A22153-20168	SHCS, M8x16mm G10.9	A22153	0.3 kg	27
4	651-261	GREASE FITTING, 1/4"-28		0.0 kg	28
10	A22158-5	WASHER, HD NW OD M16	A22158	0.2 kg	29
10	A22151-52008	HHCS, M16x200mm C10.9	A22151	3.5 kg	30
12	A22153-20208	SHCS, M8x20mm G10.9	A22153	0.2 kg	31
8	615-149	SHSS, M8x12mm CONE PT		0.0 kg	32

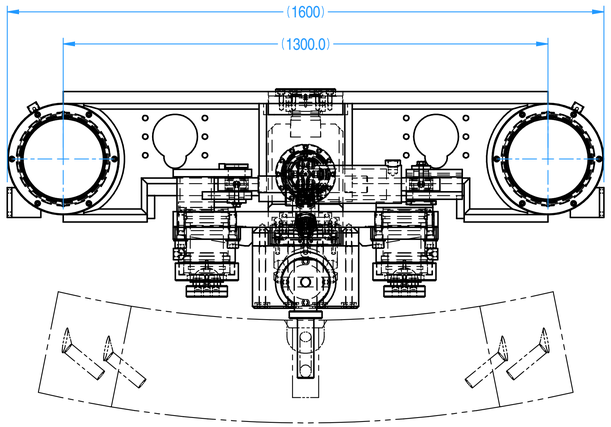

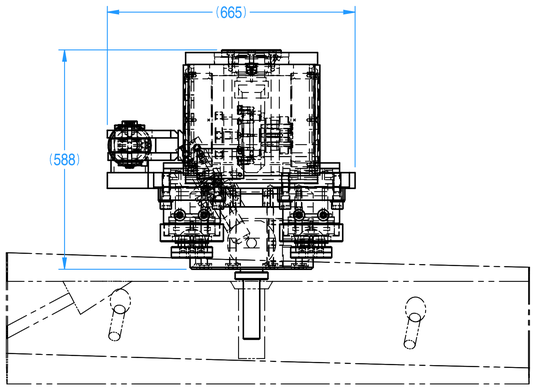

TRC P/N 1034405
GRIP ASSEMBLY, ERECTOR
1:8

T.LANG 08-05-11 BY/ DATE

SHEET 2 - ADDED GREASE FITTING

1 REV

DESCRIPTION

PROPRIETARY NOTICE
This information is considered to be the sole property of The Robbins Company, and remains their sole property. It shall not be duplicated in full or part, used or disclosed to others without prior consent in written consent of The Robbins Company. By accepting this information, recipient agrees to abide in total accordance with the foregoing restrictions and to be liable for any violations to the conditions. This material is on loan only, and is to be returned upon request to The Robbins Company.

MACHINE	NEXT ASSY
EPB 219-364	1034472

UNLESS NOTED ALL DIMS ARE mm

TOLERANCES UNLESS NOTED

0-300	±1.5	X	±1.5
300-1500	±3	X.X	±1.0
1500-6000	±6	X.XX	± .40
6000+	±12	X.XXX	±.100
		ANGLES	±1°
		SURFACE FINISH	3.2

Machining Fillets

DIMENSIONS (X) ARE REF

ALL GEOMETRIC DIMENSIONING & TOLERANCING PER ANSI Y14.5M-1982 AS APPLICABLE

TITLE: GRIP ASSEMBLY, ERECTOR

SIZE	DWG No.	REV	SHT	SCALE
D	1034405	1	1 OF 2	SEE DETAIL - DO NOT SCALE

DRAWN	CHECKED
T.LANG	D. READY
DATE	DATE
08-25-2011	

THIRD ANGLE PROJECTION

APPROVED
N.JOHNSON
DATE

WEIGHT TOTAL: 957.4 kg

Robbins

www.TheRobbinsCompany.com

1034405

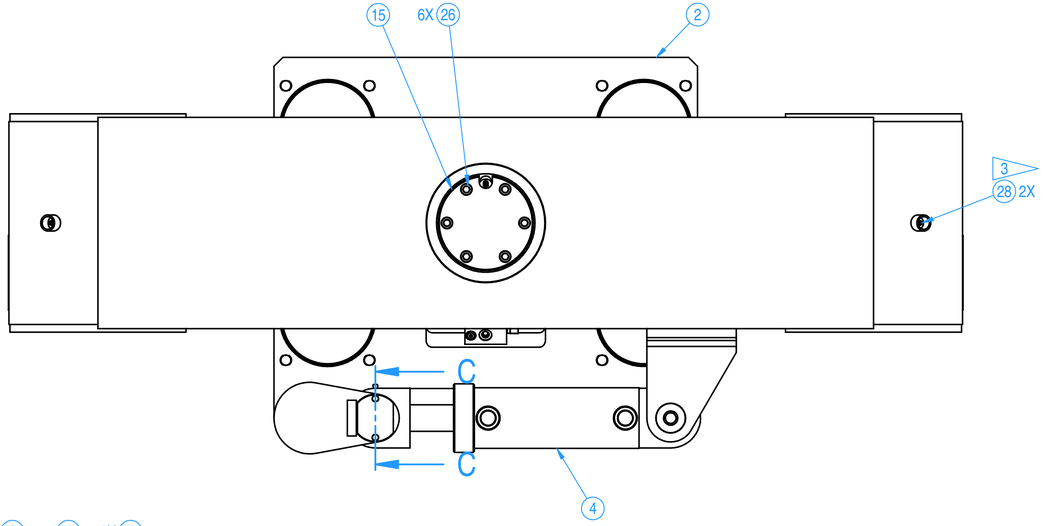

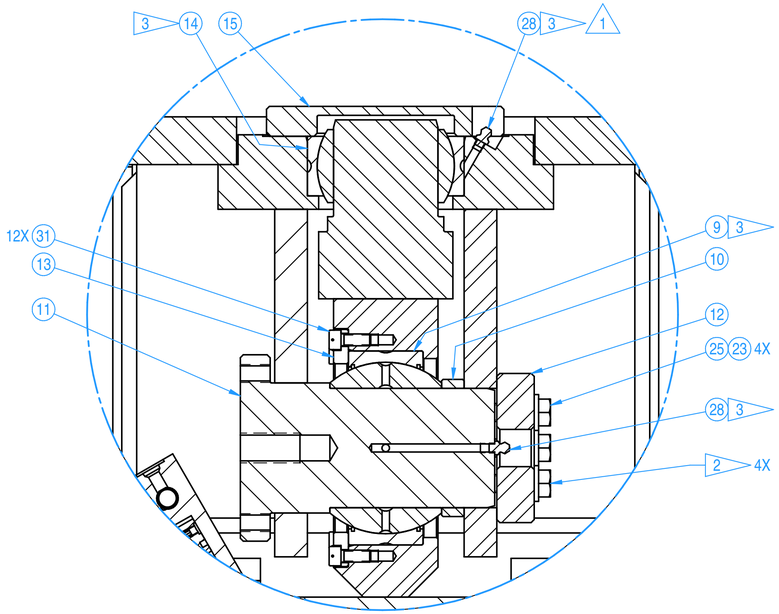

DETAIL B
1:2

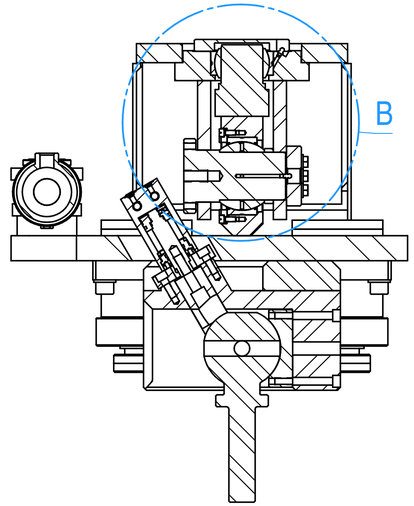

SECTION A-A
1:5

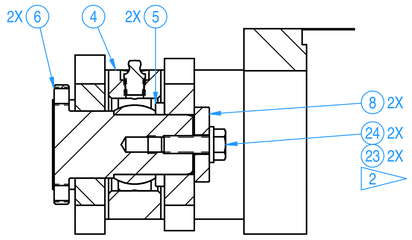

SECTION C-C
1:2
TYP BOTH ENDS
OF HYDRAULIC CYLINDER

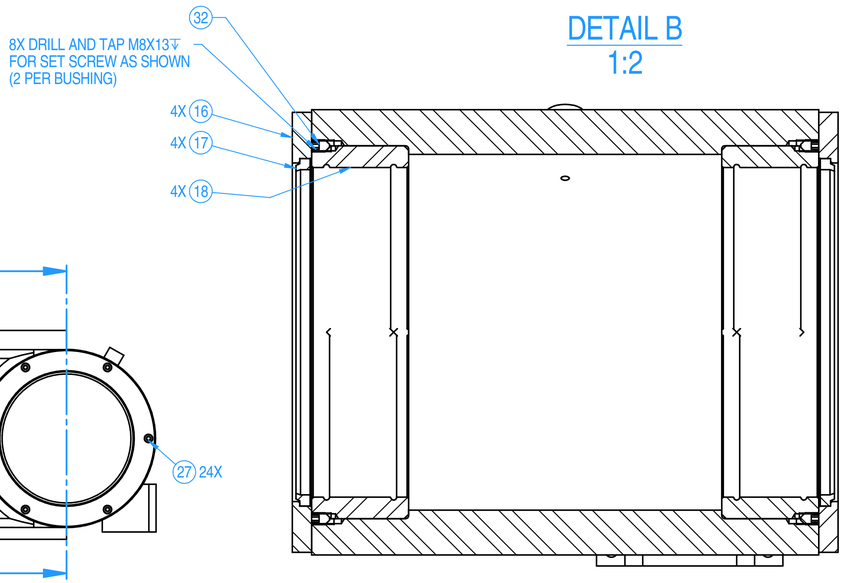

SECTION D-D
1:2

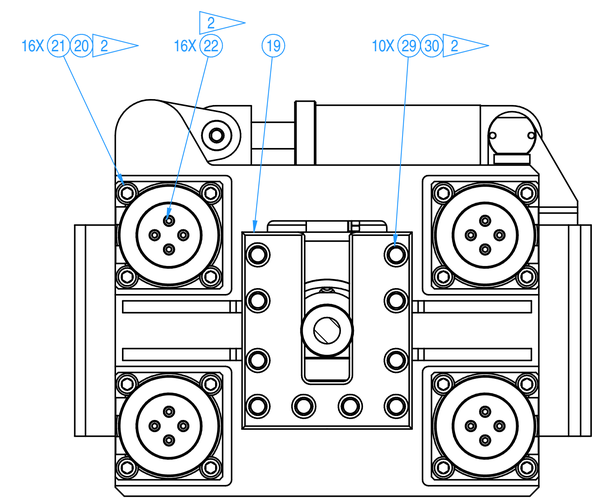

SECTION E-E
1:5

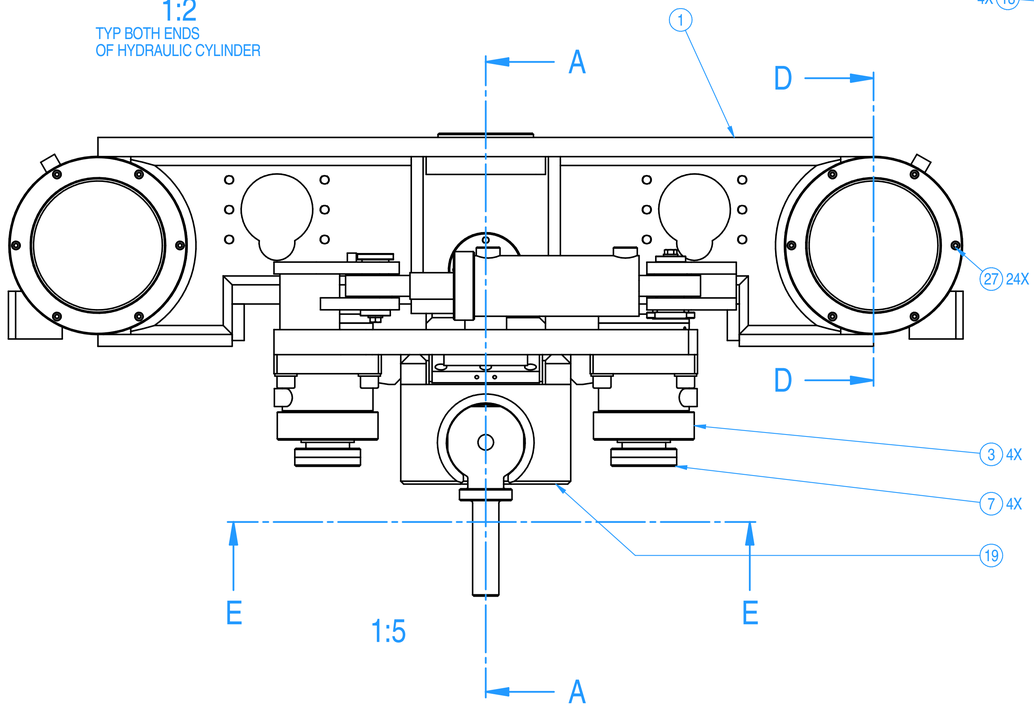

1:5

REV	DESCRIPTION	BY/DATE
1	ADDED GREASE FITTING	T.LANG 09-09-11

PROPRIETARY NOTICE
The information disclosed hereon is the sole property of The Robbins Company, and remains their sole property. It shall not be duplicated in full or part, used by or disclosed to any other party without prior written consent of The Robbins Company. By accepting this information, recipient agrees to abide in total with this notice, without any modification whatsoever to the conditions. This material is on loan only, and is to be returned upon request to The Robbins Company.

MACHINE	NEXT ASSY
EPB 219-364	1034472

UNLESS NOTED ALL DIMS ARE mm
TOLERANCES UNLESS NOTED

FAB (mm)		MACHINING (mm)	
0-300	±1.5	X	±1.5
300-1500	±3	X.X	±1.0
1500-6000	±6	X.XX	±.40
6000+	±12	X.XXX	±.100
		ANGLES	±1°
		SURFACE FINISH	3.2

DIMENSIONS (X) ARE REF
ALL GEOMETRIC DIMENSIONING & TOLERANCING PER ANSI Y14.5M-1982 AS APPLICABLE.

TITLE
GRIP ASSEMBLY, ERECTOR

SIZE	DWG No.	REV	SHT	SCALE:
D	1034405	1	2 OF 2	SEE DETAIL - DO NOT SCALE

Robbins

DRAWN	CHECKED
T.LANG	D. READY
DATE 08-25-2011	DATE
THIRD ANGLE PROJECTION	APPROVED N.JOHNSON
WEIGHT TOTAL: 957.4 kg	DATE

www.TheRobbinsCompany.com

1034405

QTY	PART No.	DESCRIPTION	DWG No.	WT. Total	ITEM
44	A22154-45	NUT, M12 C8	A22154	0.88 kg	38
152	A67526-40258	SFHS M12x25mm C10.9	A67526	4.56 kg	39
8	A22152-40305	HHCS M12x30mm C8.8	A22152	0.32 kg	40
56	A67526-50458	SFHS M16x45mm C10.9	A67526	4.48 kg	41
8	A67526-10208	SFHS M6x20mm C10.9	A67526	0.08 kg	42
4	A22153-60605	SHCS M20x60mm C8,8	A22153	1.6 kg	43
4	A22158-6	WASHER, HD NW OD M20	A22158	0.04 kg	44
24	A22152-20205	HHCS M8x20mm C8,8	A22152	0.24 kg	45
24	A22158-2	WASHER, HD NW OD M8	A22158	0.24 kg	46
1	1051157	SLIDE FRAME C	1051157	220.4 kg	47
1	D65170-050	BEARING, SPHERICAL PLAIN	D65170	0.54 kg	48

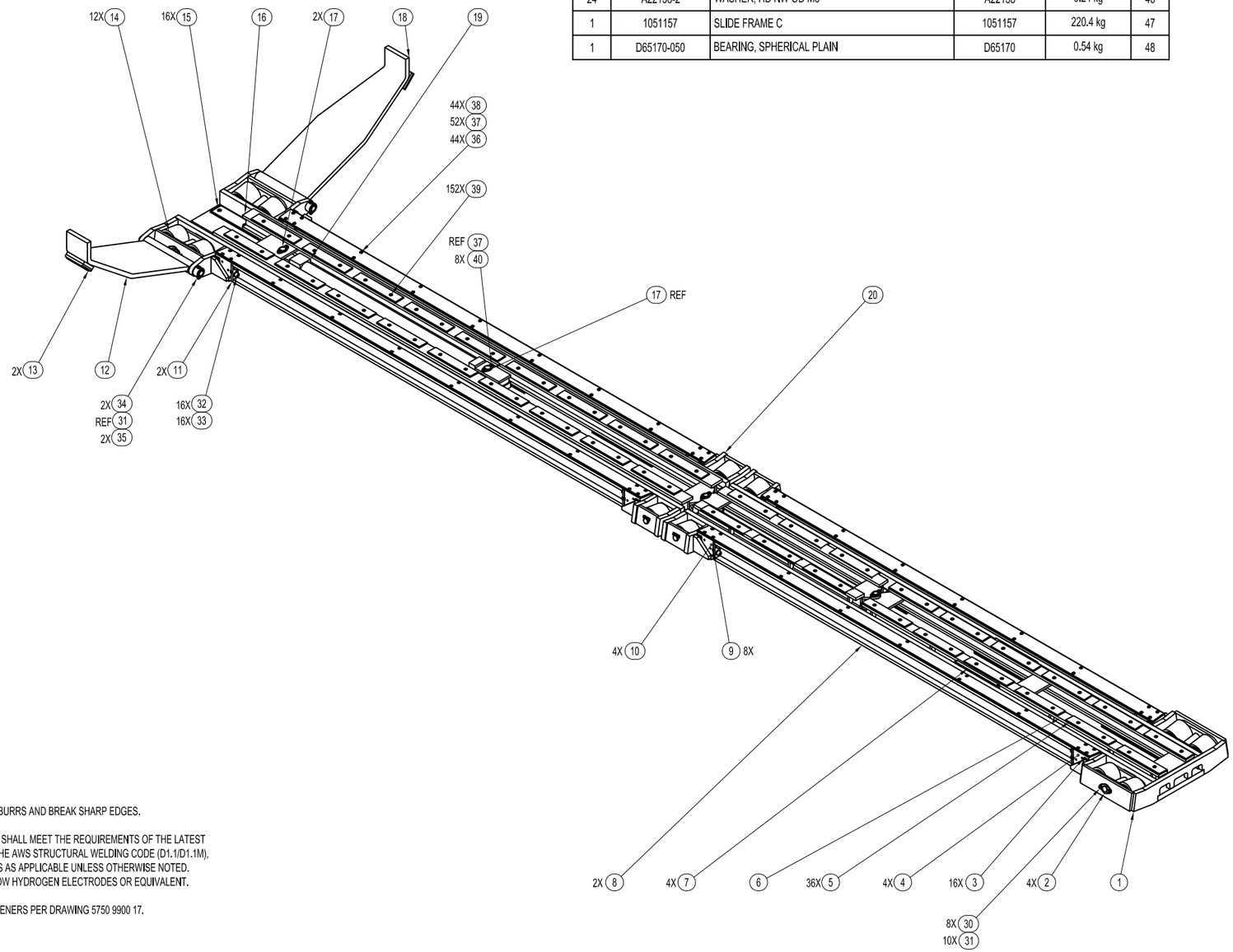

QTY	PART No.	DESCRIPTION	DWG No.	WT. Total	ITEM
1	1051160	BASE FRAME-2	1051160	1982 kg	1
4	B381014-1	WHEEL BOGIE PIVOT PIN	B381014	20 kg	2
16	B381018-1	LIFT RAM SLIDE PAD	B381018	8 kg	3
4	C381005-1	LIFT RAM	C381005	120 kg	4
36	1051154	UPPER WEAR PAD - INNER	1051154	1.8 kg	5
1	1051156	SLIDE FRAME B	1051156	420.4 kg	6
4	1051153	WEAR PAD	1051153	1.68 kg	7
2	1051167	LIFT BEAM B	1051167	676 kg	8
8	B381023-1	LIFT RAM KEY	B381023	2.4 kg	9
4	C381005-2	LIFT RAM	C381005	200 kg	10
2	1051166	LIFT BEAM A	1051166	738 kg	11
1	1051151	TOWING ARM-1	1051151	212 kg	12
2	1051170	TOWING PAD	1051170	1.65 kg	13
12	B381010-1	WHEEL	B381010	144 kg	14
16	1051165	LOWER SLIDE PAD	1051165	24 kg	15
1	1051155	SLIDE FRAME A	1051155	791 kg	16
2	B381019-1	SLIDE RAM CLEVIS PIN	B381019	4 kg	17
1	1051152	TOWING ARM-2	1051152	212 kg	18
1	C381004-1	SLIDE RAM	C381004	108 kg	19
1	1051159	BASE FRAME-1	1051159	2473.5 kg	20
1	1051163	SEAT OF BEARING	1051163	3.27 kg	21
1	1051164	PIN OF BEARING	1051164	4.5 kg	22
12	B381011-1	WHEEL AXLE	B381011	48 kg	23
4	B381009-1	WHEEL BOGIE	B381009	96 kg	24
24	B381012-1	WHEEL BUSH	B381012	12 kg	25
12	B381013-1	KEY PLATE	B381013	1.2 kg	26
2	1051158	PIN	1051158	1.4 kg	27
2	1051169	UPPER WEAR PAD B-OUTER	1051169	20 kg	28
2	1051168	UPPER WEAR PAD A-OUTER	1051168	21.6 kg	29
8	A22152-50355	HHCS M16x35mm C8.8	A22152	0.8 kg	30
10	A22158-5	WASHER, HD NW OD M16	A22158	0.1 kg	31
16	A22153-70605	SHCS M24x60mm C8,8	A22153	6.4 kg	32
16	A22158-7	WASHER, HD NW OD M24	A22158	0.48 kg	33
2	A22151-51105	HHCS M16x110mm C8,8	A22151	0.4 kg	34
2	A22154-55	NUT, M16 C8	A22154	0.08 kg	35
44	A67526-40508	SFHS M12x55mm C10.9	A67526	2.2 kg	36
52	A22158-4	WASHER, HD NW OD M12	A22158	0.52 kg	37

NOTES:

1. REMOVE ALL BURRS AND BREAK SHARP EDGES.
2. ALL WELDING SHALL MEET THE REQUIREMENTS OF THE LATEST EDITION OF THE AWS STRUCTURAL WELDING CODE (D1.1/D1.1M), ALL SECTIONS AS APPLICABLE UNLESS OTHERWISE NOTED. USE E70XX LOW HYDROGEN ELECTRODES OR EQUIVALENT.
3. TORQUE FASTENERS PER DRAWING 5750 9900 17.

PROPRIETARY NOTICE:
This information is the property of The Robbins Company, and remains their sole property. It shall not be used, copied, or reproduced in any manner by other party without prior written consent of The Robbins Company. Any such unauthorized use or reproduction will be taken in hostile with the rights, without any modification whatsoever, and is to be returned upon request to The Robbins Company.

REV	DESCRIPTION	REV'D BY/ DATE	APP'D BY/ DATE

TITLE: SEGMENT FEEDER

MACHINE	NEXT ASSY
EPB2016-376	1046701
EPB2016-377	1046702

UNLESS NOTED ALL DIMS ARE mm
TOLERANCES UNLESS NOTED
FRACTIONS ± 1/64
MACHINING DIMS: X ± 1.5, X.X ± 1.0, X.XX ± .40, X.XXX ± .100, ANGLES ± 1, SURFACE 125
THIRD ANGLE PROJECTION
DIMENSIONS (A) ARE REFERENCE
ALL GEOMETRIC DIMENSIONING & TOLERANCING PER ANSI Y14.5-2009

SIZE: D | DWG NO.: 1051150 | REV: 0 | SHT 1 OF 3 | SCALE: 1:20 | DO NOT SCALE

DRAWN BY: GAO SHAOJUN | DATE: 2012/08/04
CHECKED STANDARDS: B.WAKELEE
CHECKED DESIGN: J.HEINEMAN
APPROVED BY: J.HEINEMAN | DATE: 08/27/2012
WEIGHT TOTAL: 8594 kg

Robbins

www.TheRobbinsCompany.com

1051150

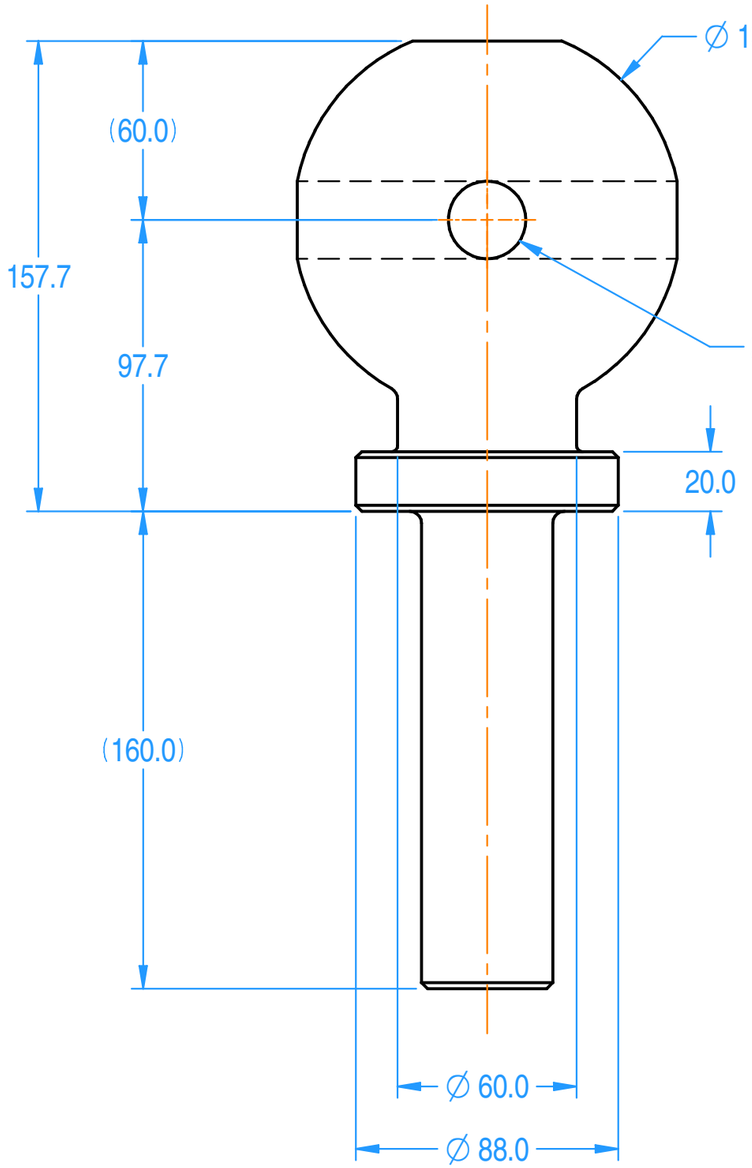

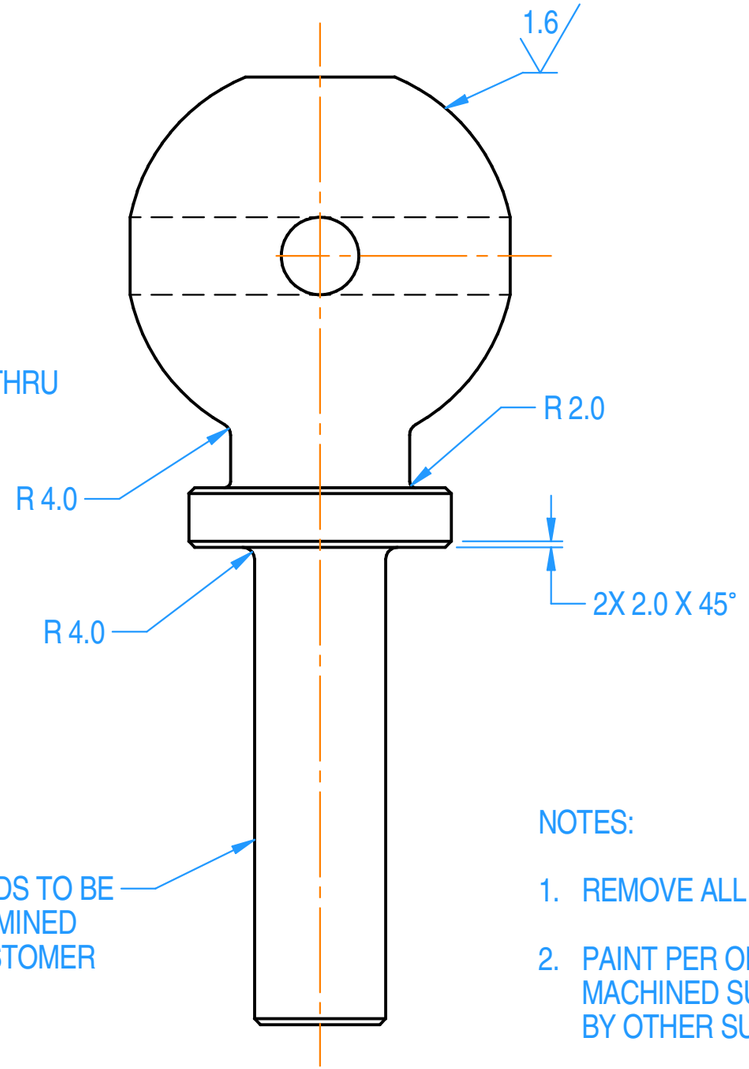

1034640
1020 CR
1:2

NOTES:

1. REMOVE ALL BURRS & BREAK SHARP EDGES.
2. PAINT PER ORDER SPECIFICATIONS.
   MACHINED SURFACES NOT TO BE PAINTED, BUT PROTECTED BY OTHER SUITABLE METHODS.
3. STEEL STAMP or ELECTRO-ETCH PART NUMBER, P.O. NUMBER & VENDOR I.D. CODE ON PART WITH 8mm MIN. CHARACTERS.

1034640

BY/ DATE | DESCRIPTION | REV

PROPRIETARY NOTICE
The information disclosed hereon, is the sole property of The Robbins Company, and remains their sole property. It shall not be duplicated in full or part, used by, or disclosed to any other party without prior written consent of The Robbins Company. By accepting this information, recipient agrees to abide in total with this notice, without any modification whatsoever to the conditions. This material is on loan only, and is to be returned upon request to The Robbins Company

MACHINE	NEXT ASSY
EPM 219-364	1034684

UNLESS NOTED ALL DIMS ARE mm

TOLERANCES UNLESS NOTED

FAB (mm)		MACHINING (mm)	
0-300	±1.5	X	±1.5
300-1500	±3	X.X	±1.0
1500-6000	±6	X.XX	±.40
6000+	±12	X.XXX	±.100
		ANGLES	±1°
		SURFACE FINISH	3.2

DIMENSIONS (X) ARE REF

ALL GEOMETRIC DIMENSIONING & TOLERANCING PER ANSI Y14.5M-1982 AS APPLICABLE.

TITLE: LIFTING STUD

SIZE	DWG No.	REV	SHT	SCALE
B	1034640	0	OF 1/1	SEE DETAIL - DO NOT SCALE

DRAWN	CHECKED
D. READY	T. LANG
DATE 08-23-2011	DATE 08-24-2011

THIRD ANGLE PROJECTION

APPROVED N. JOHNSON DATE

WEIGHT TOTAL: 11.2 kg

Robbins

Lifting stud and segment insert calclulations	
Radial extension cylinders	
Quantity of cylinders	2
Bore (mm)	100
Rod (mm)	56
Operating pressure (Mpa)	20
Retract force (kN)	215.6
Diameter of lifting stud shaft (mm)	60
Tensile stress (Mpa)	76.3
Yield strength of stud (Mpa)	350
Safety factor	4.6
Pullout force of segment insert (kN)	370.0
Safety factor against pullout	1.7

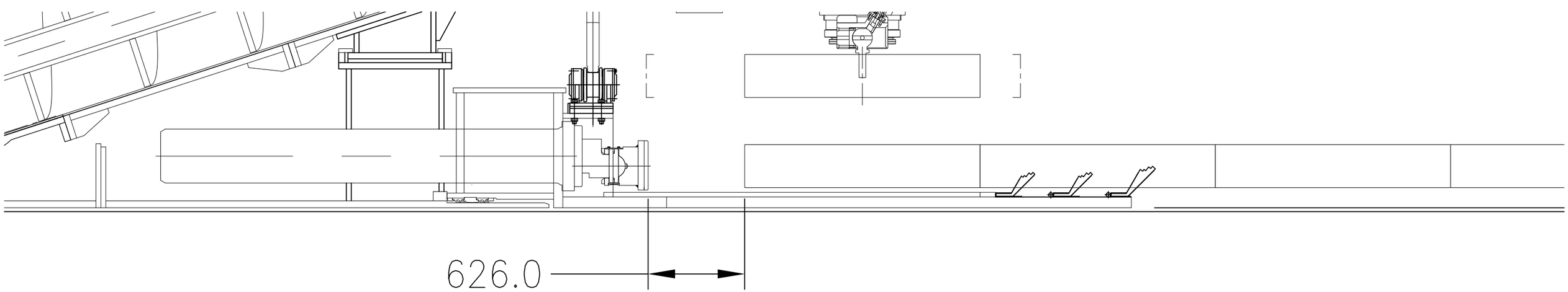

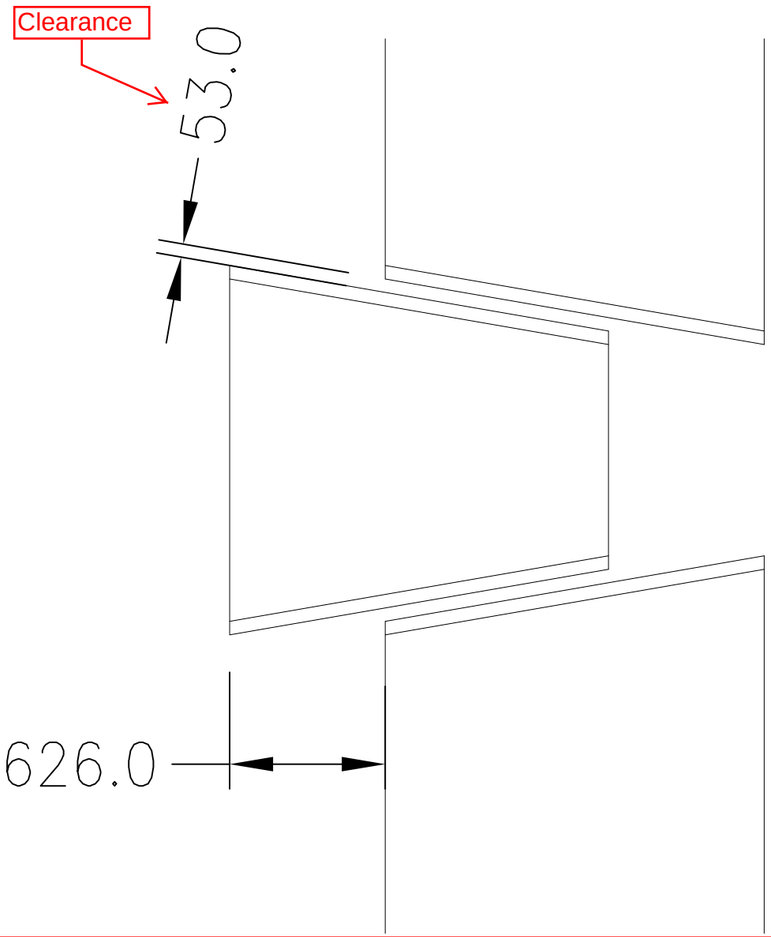

Key segment installation layout

MODEL EPB2016-376/377
SECTION 12 • Operator Station Assembly

1. Operator station assembly drawing

QTY	PART No.	DESCRIPTION	DWG No.	WT. Total	ITEM
1	1036170	OPERATORS CAB	1036170	1092.3 kg	1
1	1036171	ANGLED CONSOLE BASE ASSEMBLY	1036171	64.6 kg	2
1	1034428	COUNTER, ANGLED	1034428	101.9 kg	3
6	1028502	LAMP, CABINET, LED, 489mm	1028500	19.9 kg	4*
2	1028504	CABLE, JUMPER, 120VAC, 5ft	1028500	0.0 kg	5
4	1028505	CONNECTOR, END TO END	1028500	0.0 kg	6*
4	1028429	CF16/16 FRAME, 16 CABLE/PIPE	1028428	12.2 kg	7
16	1028437	SPARE MODULE GM40 10-32	1028428	7.0 kg	8
1	A99652-1	STAINLESS STEEL KEY EXCHANGE BOX	A99652	1.7 kg	9
3	1030798	JUMP SEAT ASSEMBLY	1030798	11.4 kg	10
1	1036172-3	XP AIR CONDITIONER, 3HP	1036172	72.1 kg	11
1	1001303	BOOKCASE		514.7 kg	12

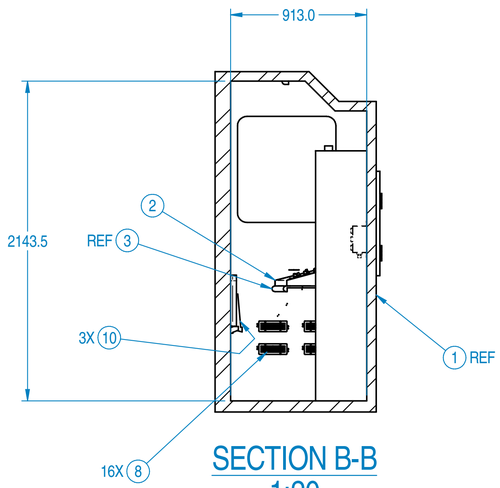

SECTION B-B
1:20

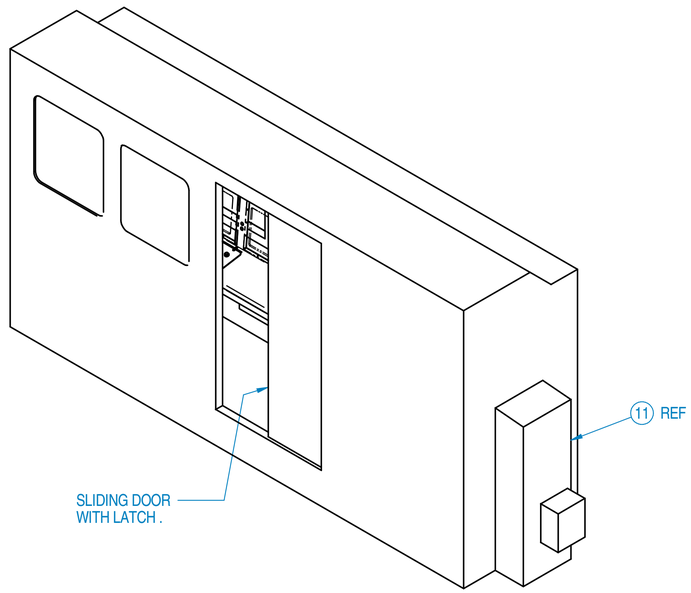

ISO VIEW
1:20

NOTES:

1. LOCATE AND MOUNT COMPONENTS AS REQUIRED AT ASSEMBLY.
2. LIGHTING AND POWER FIXTURES INSTALLED DURING ASSEMBLY USING XP METHODS.

3 SUPPLIED AS PART OF PLC ASSEMBLY.

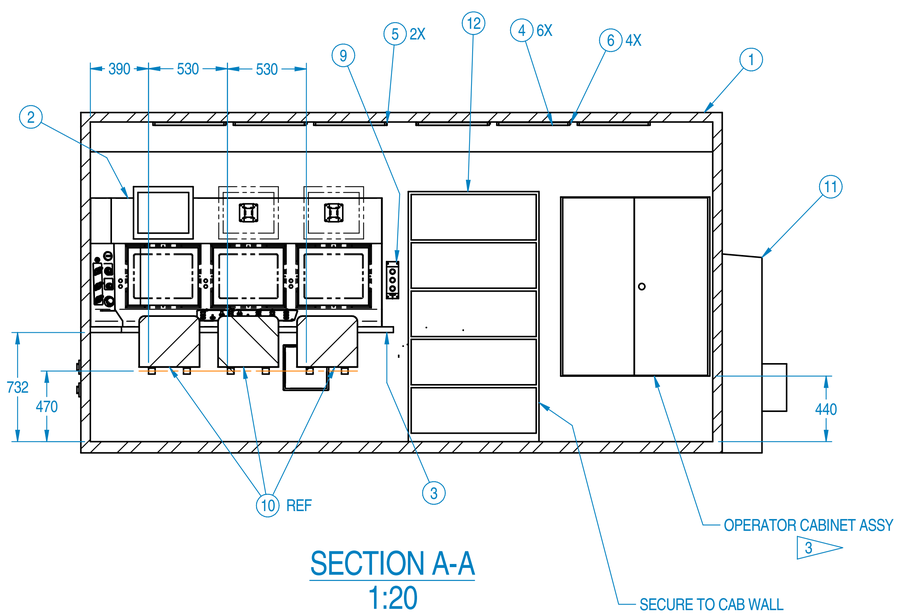

SECTION A-A
1:20

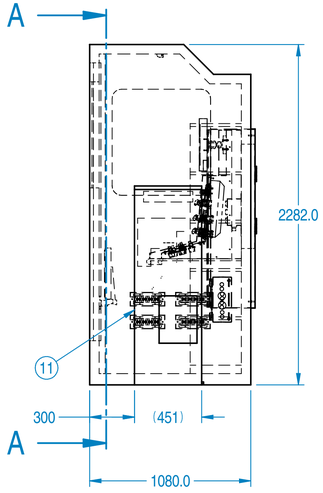

TRC P/N 1036169
OPERATORS CAB ASSEMBLY
1:20

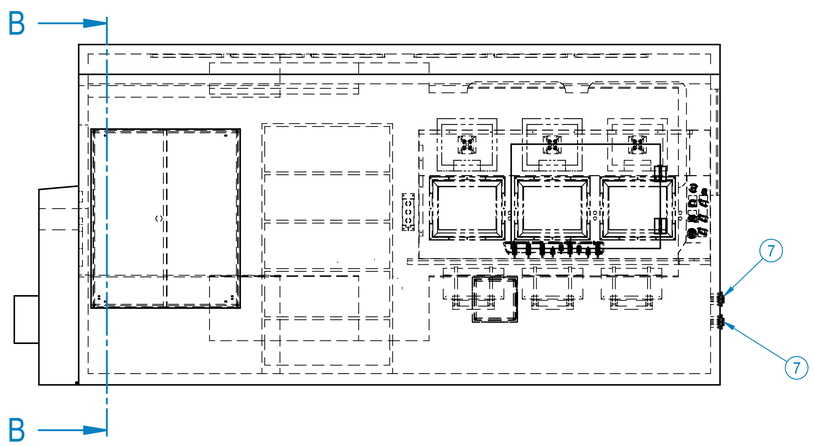

1036169

PROPRIETARY NOTICE
The information disclosed herein is the sole property of The Robbins Company, and remains the sole property of it shall not be duplicated in full or part, used by, or disclosed to any other party without prior written consent of The Robbins Company. By accepting this information, recipient agrees to abide in the use of this information without written consent of The Robbins Company, and to the conditions. This material is not to be reproduced, copied, or used in any form or by any means, whatsoever to the conditions. This material is not to be reproduced, copied, or used in any form or by any means, whatsoever to the conditions.

MACHINE	NEXT ASSY
EPB2016-376	D122791
EPB2016-377	

UNLESS NOTED ALL DIMS ARE mm
TOLERANCES UNLESS NOTED

0-300	±1.5	X	±1.5
300-1500	±3	X.X	±1.0
1500-6000	±6	X.XX	±.40
6000+	±12	X.XXX	±.100
		ANGLES	±1°
		SURFACE FINISH	3.2

THIRD ANGLE PROJECTION
DIMENSIONS (X) ARE REF
ALL GEOMETRIC DIMENSIONING & TOLERANCING PER ANSI Y14.5-2009

REV	DESCRIPTION	REV'D BY/ DATE	APP'D BY/ DATE

TITLE
OPERATORS CAB ASSEMBLY

SIZE D | DWG No. 1036169 | REV 0 | SHT 1 OF 1 | SCALE SEE DETAIL | DO NOT SCALE

DRAWN BY R.GRATIAS | DATE 01/26/2012 | CHECKED STANDARDS R.FINE | CHECKED DESIGN J.HEINEMAN | WEIGHT TOTAL 2430.2 kg | APPROVED BY J.HEINEMAN | DATE 02/13/2012

Robbins

www.TheRobbinsCompany.com

MODEL EPB2016-376/377
SECTION 13 • Lube System Assembly

1. Lube schematic
2. Grease schematic
3. Excluder grease schematic
4. Tail grease schematic

NOTES:

1. INDICATES FLOW RATE (FM17-12) TO SEALS CAVITY. DISPLAYS ALARM ON OPERATORS CONSOLE OF FLOW RATE BELOW 3 LPM.
2. NV5-1 ~ NV5-2 IS FOR SAMPLING OIL ONLY.
3. FLOW SWITCH 17-1~4 SET AT 2.5 LPM DECREASING FLOW RATE WILL DISPLAY ALARM AT OPERATORS CONSOLE AND STOP CUTTER HEAD ROTATION.
4. FLOW SWITCH 17-5 THRU 17-11 SET AT 4.5 LPM DECREASING FLOW RATE WILL STOP CUTTERHEAD ROTATION AFTER 5 MINUTES AND DISPLAY ALARM MESSAGE AT OPERATORS CONSOLE. CHECK FLOW ON METER ATLEAST ONCE PER SHIFT.
5. ELECTRIC CLOG INDICATOR - DISPLAYS ALARM MESSAGE AT CONSOLE. INDICATES ELEMENT NEEDS CHANGED.
6. DISPLAYS OIL TEMPERATURE AT OPERATORS CONSOLE.
7. PRESSURE TRANSDUCER 19-1 THRU 19-2 DISPLAYS PRESSURE ON OPERATORS CONSOLE.
8. STRAINER MUST BE CLEANED ONCE PER DAY.
9. BASED ON EXPECTED ENVIRONMENT CONDITIONS AT MACHINE SITE, PROPER OIL GRADE SELECTION (AS SHOWN IN CHART) IS NECESSARY TO ENSURE REQUIRED LUBRICATION. OIL THAT IS TO THICK OR TO THIN WILL NOT PROVIDE REQUIRED LUBRICATION.
10. USE ISO # 46 HYDRAULIC FLUID.
11. OIL LEVEL IS TO BE AT DRIVE POSITION 2, NO LOWER THAN DRIVE POSITION 3, AND NO HIGHER THAN DRIVE POSITION 1.
12. HIGH LVL IS 12mm FROM TOP OF PROBE.
13. LOW LVL IS 300mm FROM TOP OF PROBE.

9 TEMP. VS. VISCOSITY CHART

BULK OIL TEMPERATURE				OIL VISCOSITY IN CENTISTOKES		OIL GRADE
MIN. °C	MAX. °C	MIN. °F	MAX. °F	MAX.	MIN.	(RECOMMENDED)
10	28	50	83	850	200	100
16	36	61	97	850	200	150
21	42	70	108	850	200	220
28	47	83	117	850	200	320

QTY	PART No.	DESCRIPTION	DWG No.	WT. Total	ITEM
					1
1	A108609-1	ELECTRIC MOTOR, 11.5 KW (15 HP)	A108609		2
1	2006801	PUMP, DOUBLE INTERNAL GEAR PUMP	2006801		3
2	A98950-1	PRESSURE FILTER	A98950		4
2	A117639-1	NEEDLE VALVE	A117639		5
1	1046894	ROTARY FLOW DIVIDER	1046894		6
1	A122545-1	ROTARY FLOW DIVIDER	A122545		7
1	A122546-1	ROTARY FLOW DIVIDER	A122546		8
1	2004471	LEVEL SWITCH, ANALOG 4-20MA	2004471		9
1	A105140-1	SIGHT GAUGE	A105140		10
1	1046895	HEAT EXCHANGER	1046895		11
1	A113424-1	LUBE OIL FEEDER	A113424		12
					13
					14
1	A105063-1	MANIFOLD, FLOW DIVIDER	A105063		15
8	A119511-1	FLOW CONTROL VALVE	A119511		16
12	2001117	FLOW METER/SWITCH	2001117		17
2	2003900	TEMPERATURE TRANSDUCER/SWITCH	2003900		18
2	2003344	PRESSURE TANSDUCER	2003344		19
					20
4	2001914	CONNECTOR/CABLE 10m, M12	2001914		21
2	2003901	M18 x 1.5 ADAPTER	2003901		22
2	5750001302	STRAINER, IN-LINE MAGNETIC	5750001302		23
4	A79867-7	BALL VALVE	A79867		24
3	A73927-1	RELIEF VALVE	A73927		25
3	2003898	RELIEF MANIFOLD, LINE MOUNT	2003898		26
2	2003899	RELIEF MANIFOLD, LINE MOUNT	2003899		27
2	A110494-1	RELIEF VALVE	A110494		28
1	B44635-6	THERMOPLASTIC TUBING	B44635		29
2	5750001486	TRUCK VALVE	5750001486		30
2	665-301	FITTING, BRASS, TB TO MALE 1/2"-3/8"			31
12	A108784-2	RESET INDICATOR, 50 BAR	A108784		32
1	2006916	HYDRAULIC RESERVOR, 15GAL	2006916		33
1	2000142	BREATHER ELEMENT	2000142		34
2	A98950-2	PRESSURE FILTER ELEMENT	A98950		35

PROPRIETARY NOTICE
The information disclosed herein is the property of The Robbins Company and remains the sole property. It shall not be copied, used or disclosed to others in whole or in part without prior written consent of The Robbins Company. Any unauthorized use will be prosecuted to the fullest extent of the law. Copies of this drawing are to be returned upon request to The Robbins Company.

MACHINE: EPB2016-376, EPB2016-377 | NEXT ASSY:
UNLESS NOTED ALL DIMS ARE mm
TOLERANCES UNLESS NOTED
FRACTIONS ± 1/64 | MACHINING: X ± 1.5, X.X ± 1.0, X.XX ± .40, X.XXX ± .100, ANGLES ± 1, SURFACE √
THIRD ANGLE PROJECTION
DIMENSIONS ARE REFERENCE
ALL GEOMETRIC DIMENSIONING & TOLERANCING PER ANSI Y14.5-2009

REV	DESCRIPTION	REV'D BY / DATE	APP'D BY / DATE

TITLE: LUBE SCHEMATIC

SIZE D | DWG NO. 1046236 | REV 0 | SHT 1 OF 2 | SCALE 1:1 | DO NOT SCALE

DRAWN BY: D.BUCKINGHAM, DATE 3/16/12 | CHECKED DIMENSION: D.DONLEY | CHECKED DESIGN: D.DONLEY | WEIGHT TOTAL | APPROVED BY: J.HENNEMAN, DATE 3/19/12

Robbins

www.TheRobbinsCompany.com

1046236

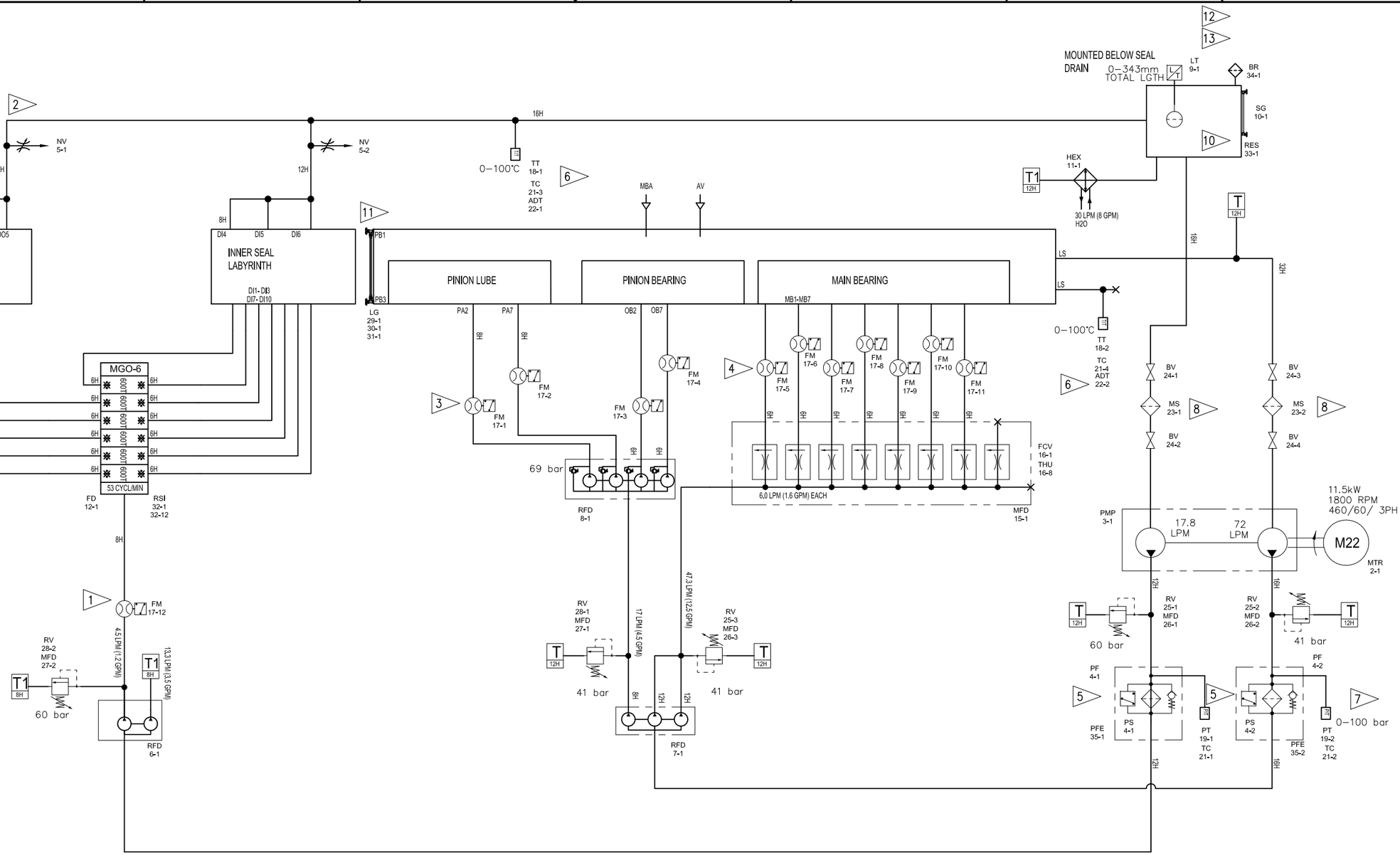

PORTING	
AO1-AO8	OUTER EXCLUDER GREASE
BO1-BO8	OUTER SEAL GREASE
CO1-CO8	OUTER SEAL GREASE
DO1-DO3, DO6-DO8	OUTER CONT. SEAL OIL
AI1-AI10	INNER EXCLUDER GREASE
BI1-BI10	INNER SEAL GREASE
CI-CI10	INNER SEAL GREASE
DI1-DI4, DI6-DI10	INNER CONT. SEAL OIL
DO4, DO5	OUTER OIL RETURN
DI5	INNER OIL RETURN
PA2, PA7	PINION LUBE A
PB2, PB7	PINION LUBE B
OB2, OB7	OUTPUT BEARING LUBE
MB1-MB7	MAINBEARING LUBE
AV	AIR VENT
LS	LUBE SUCTION
MBA	MAIN BEARING AIR PRESSURE
LEDR	LUBE EQUIPMENT DRAIN
PS	PROXIMITY SENSOR

CUTTERHEAD SUPPORT PRESSURIZATION D119244-1

MOUNTED ON C.H.S. (TOP)

PROPRIETARY NOTICE
The information contained herein is the property of The Robbins Company, and is made that said property is and shall remain confidential. Reproduction or disclosure to any other party without prior written consent of The Robbins Company, or use of the same for any purpose is forbidden and liable to lawsuit and/or damages. Any modifications to this drawing will void this notice, without any modification. Any modifications to this drawing will void this notice. This drawing is to be returned upon request to The Robbins Company.

REV	DESCRIPTION	REV'D BY/ DATE	APP'D BY/ DATE

MACHINE | NEXT ASSY

UNLESS NOTED ALL DIMS ARE mm
TOLERANCES UNLESS NOTED
0-300 ± 1.5
300-1500 ± 3
1500-6000 ± 6
6000+ ± 12
DIMENSIONS
X ± 1.5
X.X ± 1.0
X.XX ± .40
X.XXX ± .100
ANGLES ± 1°
SURFACE 63
LABEL
DIMENSIONS (X) ARE REFERENCE
ALL GEOMETRIC DIMENSIONING & TOLERANCING PER ANSI Y14.5-2009

TITLE: LUBE SCHEMATIC

SIZE D | DRG NO. 1046236 | REV 0 | SHT 1 OF 1 | SCALE 1:1
DO NOT SCALE
DRAWN BY D.BUCKINGHAM | DATE 3/16/12
CHECKED BY/DATE D.DONLEY
CHECKED BY/DATE D.DONLEY
WEIGHT TOTAL
APPROVED BY J.HENIEMAN | DATE 3/19/12

Robbins
www.TheRobbinsCompany.com

1046236

LAYOUT OF GREASE PORTS

LOOKING FORWARD

NOTES:

1. NORMALLY CLOSE, NORMALLY OPEN.
2. Fill the chamber between cutter seals with grease at shop assembly and site assembly.
3. Use grease of "Mapeblox EP1 (MAPEI)" or equivalent.
4. Description of symbol

❋	RESET INDICATOR	PT1/4 x 50 bar
☆	AUTO RELIEF INDICATOR	PT1/4 x 50 bar
★	RESET INDICATOR	PT1/4 x 100 bar

5 Set @ 180 bar, gives indication on operators display of malfunction.

6 Level sensor gives indication in operators display.

7 DCV18-1 is normally closed. Open during initial fill or maintenance only.

8 Grease pump shall operate on continuous operation below 1 bar. Intermittent operation will take place between 1-3.6 bar. Grease pump will be on for 20 seconds and off for 3 min. Above 3.6 bar the pump will be off.

QTY	PART No.	DESCRIPTION	DWG No.	WT. Total	ITEM
					1
2	A109674-1	Y STRAINER	A109674		2
					3
					4
4	A109675-1	PRESSURE GAUGE 0-300 PSI	A109675		5
2	A109825-3	GREASE PUMP ASSEMBLY	A109825		6
2	A105043-15	PRESSURE GAUGE 0-4000 PSI	A105043		7
2	2003350	PRESSURE TRANSDUCER	2003350		8
2	2001913	ULTRASONIC SENSOR	2001913		9
8	2001914	CONNECTOR CABLE, 10m M12	2001914		10
					11
2	A90764-4	NEEDLE VALVE 1/2"	A90764		12
2	A95617-1	DIRECTIONAL VALVE 1/2"	A95617		13
1	A95616-1	FILTER, REGULATOR, & LUBRICATOR	A95616		14
					15
5	A79868-2	CHECK VALVE 1/4"	A79868		16
1	A79868-3	CHECK VALVE 3/8"	A79868		17
2	A109826-1	SHUTOFF VALVE	A109826		18
4	A118214-1	PROXIMITY CABLE	A118214		19
4	2001903	PROXIMITY SWITCH	2001903		20
2	A119315-1	FLOW DIVIDER BLOCK	A119315		21
2	A119316-1	FLOW DIVIDER BLOCK	A119316		22
1	2001905	FLOW DIVIDER BLOCK	2001905		23
1	2006809	FLOW DIVIDER BLOCK	2006809		24
1	2001907	FLOW DIVIDER BLOCK	2001907		25
1	2001910	FLOW DIVIDER BLOCK	2001910		26
4	2003439	PRESSURE TRANSDUCER -1 TO 10 BAR(-14 TO 145 PSI)	2003439		27
66	A108784-2	RESET INDICATOR, 50 BAR	A108784		28
3	A108785-2	RESET INDICATOR, 100 BAR	A108785		29
1	A108795-1	AUTO RELIEF INDICATOR	A108795		30
					31
2	A119822-1	FLOW DIVIDER BLOCK	A119822		32
6	A109723-3	BALL VALVE, 1/2"	A109723		33

REV	DESCRIPTION	DLD / REVD DIV DATE	DLD / APPD DIV DATE
1	UPDATED MACHINE VIEW	5/1/12	5/1/12

PROPRIETARY NOTICE

MACHINE: EPB2016-376, EPB2016-377 — NEXT ASSY:

UNLESS NOTED ALL DIMS ARE mm

TOLERANCES UNLESS NOTED

0-300	± 1.5	X	± 1.5
300-1000	± 3	XX	± 1.0
1000-4000	± 6	XXX	± .40
4000+	± 12	XXXX	± .100
		ANGLES	± 1
		SURFACE	

THIRD ANGLE PROJECTION — DIMENSIONS (X) ARE REFERENCE

ALL GEOMETRIC DIMENSIONING & TOLERANCING PER ANSI Y14.5-2009

TITLE: AUTOMATIC GREASE LUBRICATION SYSTEM

SIZE: D — DWG No.: 1046238 — REV: 1 — SHT: 1 of 1 — SCALE: 1:1 — DO NOT SCALE

DRAWN BY: M. YASENOSKY, DATE: 1/30/2012 — CHECKED ENGINEER: D.DONLEY, CHECKED DESIGN: D.DONLEY — WEIGHT TOTAL: — APPROVED BY: J.HEINEMAN, DATE: 2/20/2012

Robbins

www.TheRobbinsCompany.com

1046238

QTY	PART No.	DESCRIPTION	DWG No.	WT. Total	ITEM
1	A95616-1	FILTER, REGULATOR & LUBRICATOR	A95616		1
1	2006818	GREASE PUMP ASSEMBLY	2006818		2
1	A95617-1	DIRECTIONAL VALVE 5-WAY	A95617		3
1	A90764-4	NEEDLE VALVE	A90764		4
2	2006905	LIMIT SWITCH	2006905		5
1	A64507-1	CHECK VALVE, 3/4"	A64507		6
1	2003350	PRESSURE TRANSDUCER 2-250 bar	2003350		7
1	A119536-1	FLOW DIVIDER	A119536		8
2	A74595-4	FLOW DIVIDER	A74595		9
1	A74595-1	FLOW DIVIDER	A74595		10

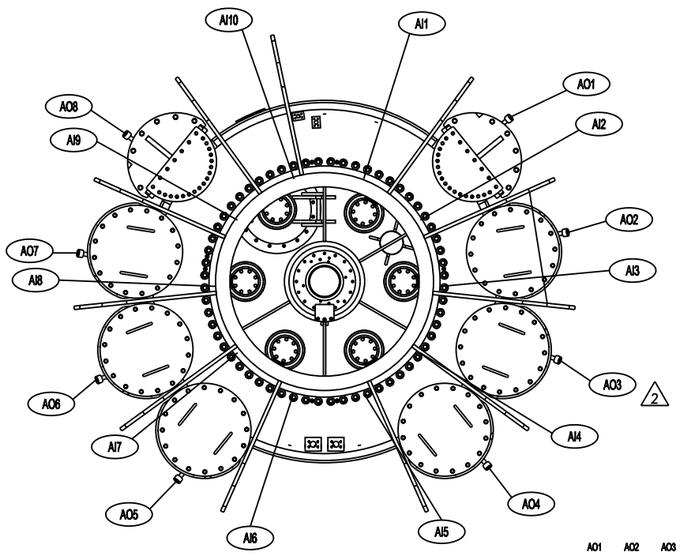

LAYOUT OF GREASE PORTS

LOOKING FORWARD

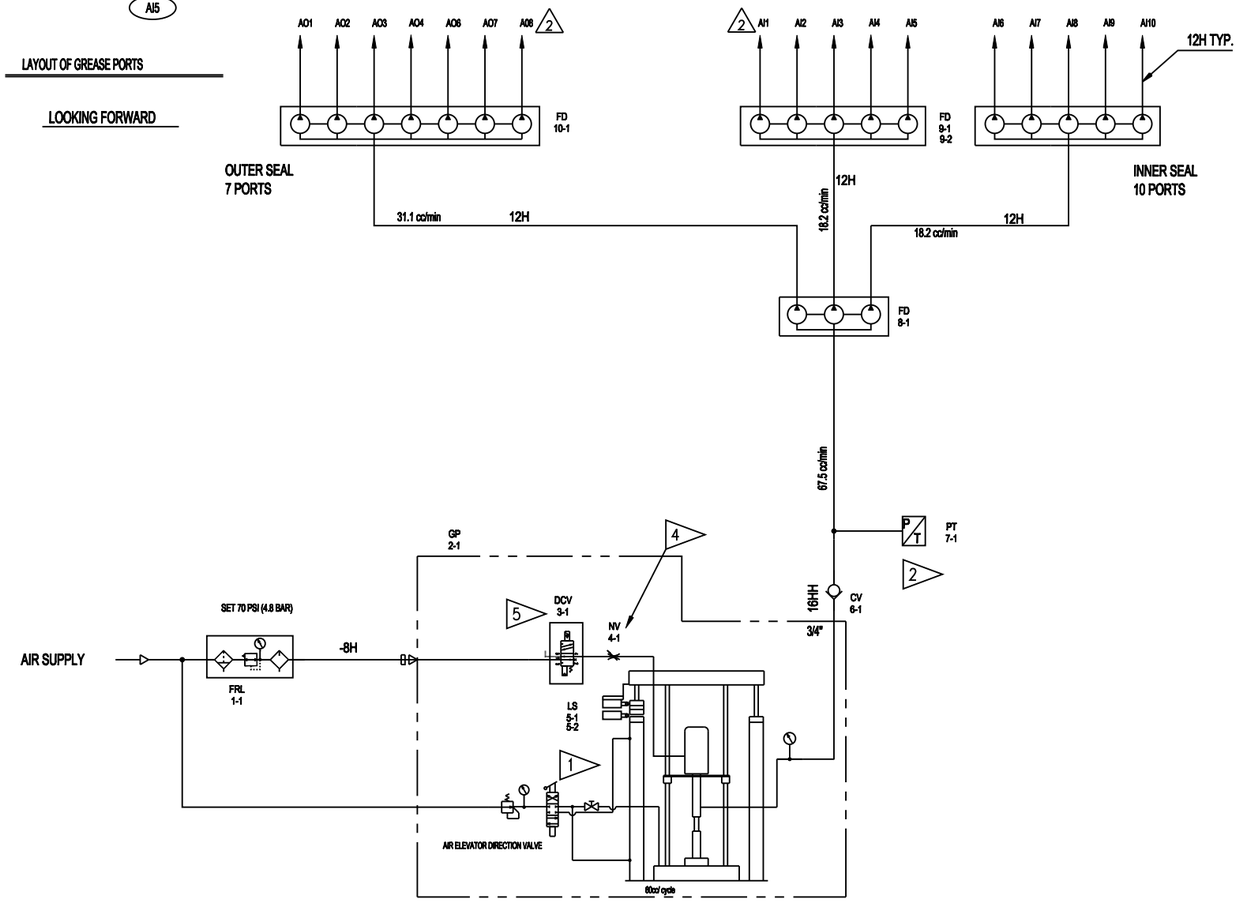

EXCLUDER GREASE
CONDAT HBW OR EQUIVELANT
400lb drum (200L)

REFERENCE DRAWINGS	
HYDRAULIC SCHEMATIC	1045925
LUBE SCHEMATIC	1046236
WATER SCHEMATIC	1046290
AUTOMATIC GREASE LUBRICATION SCH.	1046238
LUBRICATION SYSTEM ASSY	1046289

NOTES:

1. LIMIT SWITCHES INDICATE LOW LEVEL ON GREASE DRUM AND EMPTY DRUM. VISUAL DISPLAY AT OPERATOR'S CONSOLE.
2. RISING PRESSURE SHUTS DOWN PUMP @ 2000 PSI. (138 bar) FALLING PRESSURE INDICATES LOW GREASE FLOW @ 100 PSI. (6.9 bar)
3. GREASE RAM IS IN OPERATION DURING SUPPLY TO FEED GREASE INTO THE PUMP.
4. SET GREASE PUMP @ 1 CYCLES/MIN.
5. PLC CONTROL OVER ON/OFF VOLUME CONTROL.
6. FOR ALERT OPERATIONS: A) ADJUST GREASE PUMP TO 135cc/min.
7. FOR EMERGENCY OPERATIONS: A) ADJUST GREASE PUMP TO 67.5cc/min.

REV	DESCRIPTION	REVD BY/ DATE	APP'D BY/ DATE
2	CORRECTED ITEM 2 PART NUMBER, UPDATED FIND SHIELD PORT LAYOUT UPDATED PORT CALLOUTS	DLB 3/12/12	DLD 3/12/12
1	ITEM 2 WAS A119475-1, ITEM 5 WAS A110082-1	DLB 2/14/12	DLD 2/14/12

MACHINE	NEXT ASSY
EPB2016-376	
EPB2016-377	

TITLE: EXCLUDER GREASE SCHEMATIC

UNLESS NOTED ALL DIMS ARE: mm
TOLERANCES UNLESS NOTED
0-300 ± 1.0 | 300-1000 ± 2 | 1000-6000 ± 6 | 6000+ ± 12
X ± 1.0 | XX ± 1.0 | XXX ± .40 | XXXX ± .100 | ANGLES ± 1 | SURFACE 64
DIMENSIONS (X) ARE REFERENCE
ALL GEOMETRIC DIMENSIONING & TOLERANCING PER ANSI Y14.5-2009

SIZE D | DWG No. 1046235 | REV 2 | SHT 1 OF 1 | SCALE 1:1 | DO NOT SCALE

DRAWN BY: M. YASENOSKY DATE: 1/27/2012
CHECKED BY/DATE: C.SNIDER
CHECKED BY/DATE: D.DONLEY
WEIGHT TOLL
APPROVED BY: J.HEINEMAN DATE: 1/30/2012

Robbins

www.TheRobbinsCompany.com

1046235

PROPRIETARY NOTICE
The information disclosed hereon, in the sole property of The Robbins Company and is not to be used for any purpose not authorized in writing by that Company. No reproduction may be made of any material without prior written consent of The Robbins Company. By accepting this information, recipient agrees to hold it confidential and to return it upon request. Any use of this information in violation of this agreement will subject the recipient to full liability for all damages resulting therefrom. This material is to be used only with equipment manufactured by The Robbins Company.

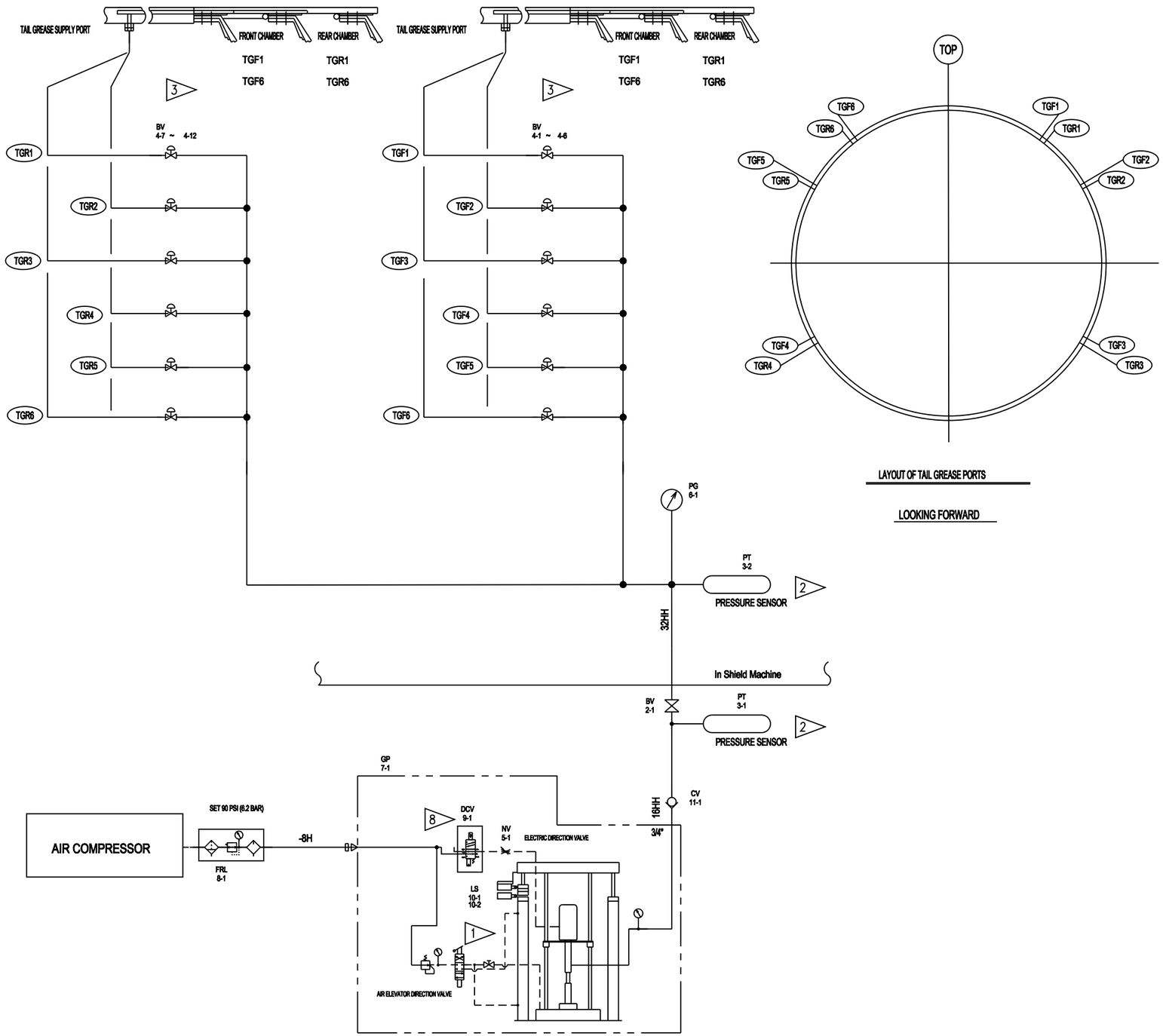

LAYOUT OF TAIL GREASE PORTS

LOOKING FORWARD

QTY	PART No.	DESCRIPTION	DWG No.	WT. Total	ITEM
					1
1	A109676-6	BALL VALVE 2" KHF3/6-16-1114-16X-UNC	A109676		2
2	2003433	PRESSURE SENSOR 0-5800 PSI IFM PN2020	2003433		3
12	2006876	ELEC.ACTUATED BALL VALVE, XP BEHRINGER BBV/T5H1D1F/BEAK5-220VAC-2LS-NEMA7	2006876		4
1	A90764-4	NEEDLE VALVE HYCON DRV-12-1.1/5	A90764		5
1	A105043-16	PRESSURE GAUGE 0-5000 PSI STAUFF SPG-063-05000-5-P-N04-U	A105043		6
1	2000243	GREASE PUMP ASSEMBLY GRACO CM155A	2000243		7
1	A95616-1	FILTER REGULATOR & LUBRICATOR SMC. NAC4000-N04	A95616		8
1	A95617-1	DIRECTIONAL VALVE 5-WAY SMC VQ5100-5-04T	A95617		9
2	2006905	LIMIT SWITCH HONEYWELL LSXD3K	2006905		10
1	A64515-1	CHECK VALVE, 1" HYCON RV20-1-12	A64515		11
2	2001914	CONNECTOR/ CABLE 10m M12 TURK	2001914		12

NOTES:

1. LIMIT SWITCHES INDICATE LOW LEVEL ON GREASE DRUM AND EMPTY DRUM. VISUAL DISPLAY AT OPERATOR'S CONSOLE.
2. PRESSURE SENSOR SHUTS DOWN PUMP @ 2500 PSI.
3. BALL VALVES SEQUENTIALLY OPEN TO ENSURE EQUAL DISTRIBUTION OF GREASE TO EACH PORT.
4. GREASE RAM IS IN OPERATION DURING SUPPLY TO FEED GREASE INTO THE PUMP.
5. BALL VALVES HAVE A LIMIT SWITCH ON OPEN/CLOSED.
6. SET GREASE PUMPS @ 17 CYCLES/MIN.
7. SET AIR MOTOR REGULATOR @ 2.7 BAR.
8. PLC CONTROL OVER ON/OFF VOLUME CONTROL.

TAIL GREASE PUMP

TAIL SEAL GREASE (WR89 OR EQU.)

63:1 PUMP RATIO.

MACHINE	NEXT ASSY
EPB2016-376	
EPB2016-377	

UNLESS NOTED ALL DIMS ARE Inch

TOLERANCES UNLESS NOTED

0 - 1"	± 1/16	FRACTIONS	± 1/16
1" - 5"	± 1/8	.X	± .03
5" - 20"	± 1/4	.XX	± .015
20" +	± 1/2	.XXX	± .005
		ANGLES	± 1
		SURFACE FINISH	125

MACHINING (X) ARE REFERENCE

ALL GEOMETRIC DIMENSIONING & TOLERANCING PER ANSI Y14.5-2009

REV	DESCRIPTION	REV'D BY/ DATE	APP'D BY/ DATE

TITLE: TAIL GREASE DIAGRAM

SIZE: D | DWG No.: 1046237 | REV: 0 | SHT: 1 OF 1 | SCALE: 1:1 DO NOT SCALE

DRAWN BY: M. YASENOSKY DATE: 1/27/2012

CHECKED BY/ENGINEER: D.DONLEY

CHECKED BY/DESIGN: D.DONLEY

WEIGHT TOOL:

APPROVED BY: J.HEINEMAN DATE: 1/27/2012

Robbins

www.TheRobbinsCompany.com

1046237

MODEL EPB2016-376/377
SECTION 14 • Hydraulic System Assembly

1. Hydraulic schematic
2. Hydraulic power unit
3. Hydraulic tank
4. Fire suppression system

QTY. -1	PART No.	DESCRIPTION	WT. EA. lbs.	MATERIAL	ITEM

1. LOW LEVEL SWITCH DISPLAYS RED MESSAGE AT OPERATORS CONSOLE AND STOPS MOTORS GROUPS M11 THROUGH M19 WHEN FLUID LEVEL IS BELOW 319mm. ⚠1

2. HYDRAULIC OIL TEMPERATURE TRANSMITTER SET AT (65°C) RISING DISPLAYS AMBER MESSAGE AT OPERATORS CONSOLE.

3. CONNECT DIRECTLY TO RESERVOIR. DO NOT CONNECT TO RESERVOIR THROUGH DRAIN FILTER.

4. CAUTION: PRESSURE VESSEL.

5. NORMALLY CLOSED VALVE N.C IS TO BE OPENED ONLY TO SERVICE CIRCUIT WHEN TBM IS NOT OPERATING. OPEN VALVE WILL ALLOW DISCHARGE OF STORED HYDRAULIC PRESSURE.

6. NORMALLY OPEN VALVE, CLOSE DURING SERVICING CIRCUIT WHEN EPB IS NOT OPERATING.

7. ALL GAUGE AND TEST PORT PLUMBING TO BE 4H SIZE HYDRAULIC HOSE.

8. HYDRAULIC OIL TO BE PETROLEUM BASED.

9. PRESSURE TRANSDUCER (57-1~3) TURNS OFF DCV164-1,3,4 AND DISPLAYS A WARNING ON THE OPERATORS DISPLAY WHEN 24 bar (350 psi) IS REACHED

10. RETURN LINES ARE DEPICTED WITH "T" TO BE RAN BACK TO THE HYDRAULIC TANK. NUMBER SHOWN IS NOT ACTUAL QUANTITY.

11. TBM AND POWER UNITS DRAINS TO BE CONNECTED TO THE RESERVOIR BELOW THE LOW LEVEL FLUID LINE.

12. M15 MUST BE RUNNING PRIOR TO M13 & M14 THE PUMP/MOTOR ASSEMBLY PROVIDES PILOT SUPPLY FOR ACTUATION OF THE SWASHPLATE.

13. M13, M14 IS PROVIDED A 0 COMMAND SIGNAL ON START UP. THIS LIMITS THE ACTUATION OF THE SWASHPLATE AND FLOW ON START UP.

14. SCREW CONVEYOR MOTOR MUST MAINTAIN 300 psi BACK PRESSURE ON RETURN LINE TO TANK.

15. PRESSURE TRANS. (38-19~34) SET @ 48 bar (700 psi). SEGMENT ERECTOR INTERLOCK WHICH WILL NOT ALLOW THE RELEASE OF SEGMENT UNTIL SWITCH IS MET.

16. SOLENOID VALVE (152-1 & -2) CLOSED DURING BORING. VALVE IS OPEN DURING EMERGENCY CLOSURE OF GATE CYLINDERS OR POWER FAILURE.

17. ~~PRESSURE TRANS. (37-2 & 4) SET @ 17 bar (250 psi). RAPID SEGMENT UNLOADER LIFT INTERLOCK WHICH WILL NOT ALLOW THE LIFTING FEET TO RETACT WHILE SWITCH IS MET.~~

18. ~~PRESSURE TRANS. (37-3 & 5) SET @ 17 bar (250 psi). RAPID SEGMENT FEET INTERLOCK WHICH WILL NOT ALLOW THE UNLOADER TO LIFT UNTIL SWITCH IS MET.~~

19. BALL VALVES (BV 205-1 & 205-2) IS ONLY OPENED DURING A POWER LOSS AND CUSTOMER SUPPLY POWER UNIT IS CONNECTED. ⚠1

20. COPY CUTTER CUIRCIT IS TO BE ISOLATED, ALL RETURN LINES AND DRAINS TO RETURN TO RES 207-1. ⚠1

SHT	REV
1	2
2	9
3	2
4	1
5	0
6	1
7	0
8	2
9	2

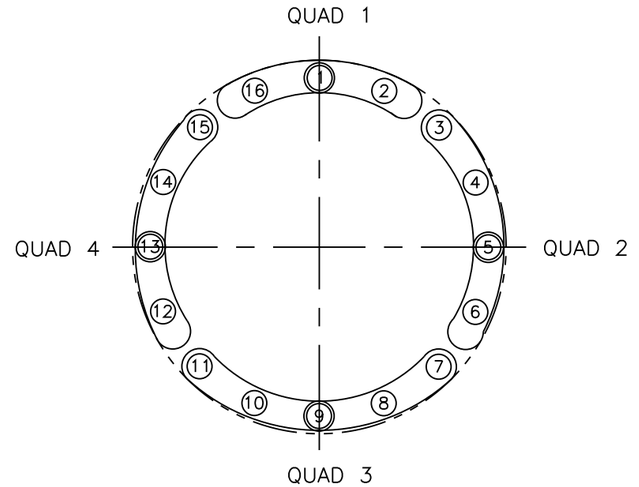

:STROKE SENSOR

THRUST CYLINDERS
(LOOKING FORWARD)

REV	DESCRIPTION	BY/ DATE
2	ADDED FAST RESET CIRCUIT	DLB 8/9/12
1	MODIFIED NOTES, ADDED NOTE 20 ADDED COPY CUTTER TANK ADDED ERECTOR MANIFOLD	DLB 9/21/12

PROPRIETARY NOTICE
The information disclosed herein is the sole property of The Robbins Company. By accepting this information, it shall not be duplicated in full or part, used for, or disclosed to anyone outside the scope of any contract or purchase agreement with The Robbins Company without its prior written consent. By accepting this information, recipient agrees to return it to The Robbins Company upon request and to limit use of it as authorized. This material is on file with The Robbins Company.

TOLERANCES UNLESS NOTED	
FRAC (in) 0 - 1"	±1/16
1" - 5"	±1/8
5" - 20"	±1/4
20" +	±1/2
FLAME CUT SSK/CLASS	
WELDING SSK/CLASS	
FUNCTIONS	±1/16
.x	±.03
.xx	±.015
.xxx	±.005
ANGLES	±1 °
MACHINING (in)	
UNLESS OTHERWISE NOTED, ALL DIMENSIONS ARE SHOWN IN INCH	
MACHINING SSK/CLASS	

MACHINE	NEXT ASSY
EPB2016-376	
EPB2016-377	
w/Oil	

DO NOT SCALE

THIRD ANGLE PROJECTION

ALL GEOMETRIC DIMENSIONING AND TOLERANCING PER ANSI Y14.5M-1982 AS APPLICABLE.

DIMS (x) ARE REF

SCALE 1:1

TITLE: HYDRAULIC SCHEMATIC

SIZE D | DWG No 1045925 | REV 2 | SHT 1 OF 9 | ORIGIN Solon / Kent / Oak Hill

Phone: (440) 248-3303
Fax: (440) 248-1702

Robbins
THE ROBBINS COMPANY
29100 Hall Street
Solon, Ohio 44139 USA

Kent, WA:
Phone (253) 872-0500
Fax: (253) 872-0199

Oak Hill, WV:
Phone (304) 465-5880
Fax: (304) 465-5886

ORIGIN: D.BUCKINGHAM DATE 1/16/12
CHECKED: D.DONLEY DATE 2/15/12

1045925

QTY. -1	PART No.	DESCRIPTION	WT. EA. lbs.	MATERIAL	ITEM

TOP

THRUST CYLINDERS
2200s x 350bar x 16No.
(D=290, d=220)

BOTTOM

LEFT

RIGHT

MOUNTED INSIDE OF MID SHIELD

MFD 66-1 · MFD 66-2 · MFD 65-1 · MFD 65-2 · MFD 65-3 · MFD 65-4 · MFD 65-5

DCV 165-1 … DCV 165-16

CV 167-1 THRU 167-16

FCV 102-1 THRU 102-16

PRV 127-3 THRU 127-18

CV 117-1 THRU 117-16

PT 38-19 THRU 38-34

TP 168-1 THRU 168-32

T2 32H · T3 32H · T4 32H · T5 32H

16H · 8H

CV 134-1 … 134-4 → R-1 · R-2 · R-3 · R-4

PG 39-5 · PG 39-4 · PG 39-3 · PG 39-2 · PT 38-5 · PT 38-4 · PT 38-3 · PT 38-2 · PCV 145-4 · PCV 145-3 · PCV 145-2 · PCV 145-1 · MFD 64-1

Measurement synchronization lines
No4 No10 No16 No22

CV 113-1 … 113-4

DCV 155-1 · DCV 155-2

PRV 98-1 CVB 81-1 set 50 bar · PRV 198-2 CVB 81-2

MFD 75-3 · DR 8H

QD 170-1 · 171-1 · 172-1 · 173-1 FILL

PMP 169-1

BARREL OF OIL

TBM

MAIN RETURN

GANTRY

HX 56-1 · HX 56-2

COOLING WATER

FILL

RF 31-1 · RF 31-2 · RF 31-3

RES 3-1

PU DRAINS · TBM DRAINS

MFD 62-1 · PFC 141-1 · 145-1 · 146-1 · PRV 125-1 · 358 BAR · CV 112-1 · T1 16H

PG 39-1 · PY 38-1 · MOUNTED ON POWER UNIT · PF 30-1

No.1 THRUST P.U. · 105 LPM · 350 BAR 50 BAR

PMA 20-1 · CH 27-1 · CH 24-2 · CI 196-1 · MTR 4-1 · 75kW 1780 RPM · PMP 10-1

BV 45-1 · BV 46-1 · BV 47-1 · BV 47-2

SAMPLING VALVE · NV 103-1 · SG 55-1

FILTRATION UNIT
0.18kW
1.1GPM

FU 201-1 · 201-2

3 BAR

BR 50-1

TT 54-1 · 195-1 · TG 53-1

LT 51-1 · LT 51-2

HYDRAULIC RESERVOIR
4500 LITERS

REV	DESCRIPTION	BY/ DATE
2	ADDED CV 134-1 THUR 134-4 INCREASED FLOW	DLB 10/01/12
1	ADDED LEVEL SWITCH · REMOVED RETURN FILER	DLB 9/21/12

PROPRIETARY NOTICE
The information disclosed hereon is the sole property of The Robbins Company and shall not be reproduced in full or part, used by, or disclosed to others without the written consent of The Robbins Company. By accepting this information, recipient agrees to retain it in confidence and to return it upon request. This material is to be used only in connection with Contract No. _____ and is to be returned upon completion of the contract.

TOLERANCES UNLESS NOTED
0 - 1" ±1/16 · 1" - 5" ±1/8 · 5" - 20" ±1/4 · 20" + ±1/2
FAB (fx)
FLAME CUT SSI/CLASS
WELDING SSI/CLASS
FRACTIONS ±1/16 · .x ±.03 · .xx ±.015 · .xxx ±.005 · ANGLES ±1 °
MACHINING (fm)
UNLESS OTHERWISE NOTED, ALL DIMENSIONS ARE SHOWN IN INCH
MACHINING SSI/CLASS

MACHINE: EPB2016-376 · EPB2016-377
NEXT ASSY
w/Oil
DO NOT SCALE
THIRD ANGLE PROJECTION
ALL GEOMETRIC DIMENSIONING AND TOLERANCING PER ANSI Y14.5M-1982 AS APPLICABLE.
DIMS (X) ARE REF
SCALE 1:1

TITLE: HYDRAULIC SCHEMATIC

SIZE D · DWG No 1045925 · REV 2 · SHT 2 OF 9 · ORIGIN Solon / Kent / Oak Hill

Robbins
THE ROBBINS COMPANY
29100 Hall Street
Solon, Ohio 44139 USA
Phone: (440) 248-3303
Fax: (440) 248-1702

ORIGINAL D.BUCKINGHAM DATE 1/16/12 · CHECKED D.DONLEY DATE 2/15/12

Kent, WA:
Phone (253) 872-0500
Fax: (253) 872-0199
Oak Hill, WV:
Phone (304) 465-5880
Fax: (304) 465-5886

1045925

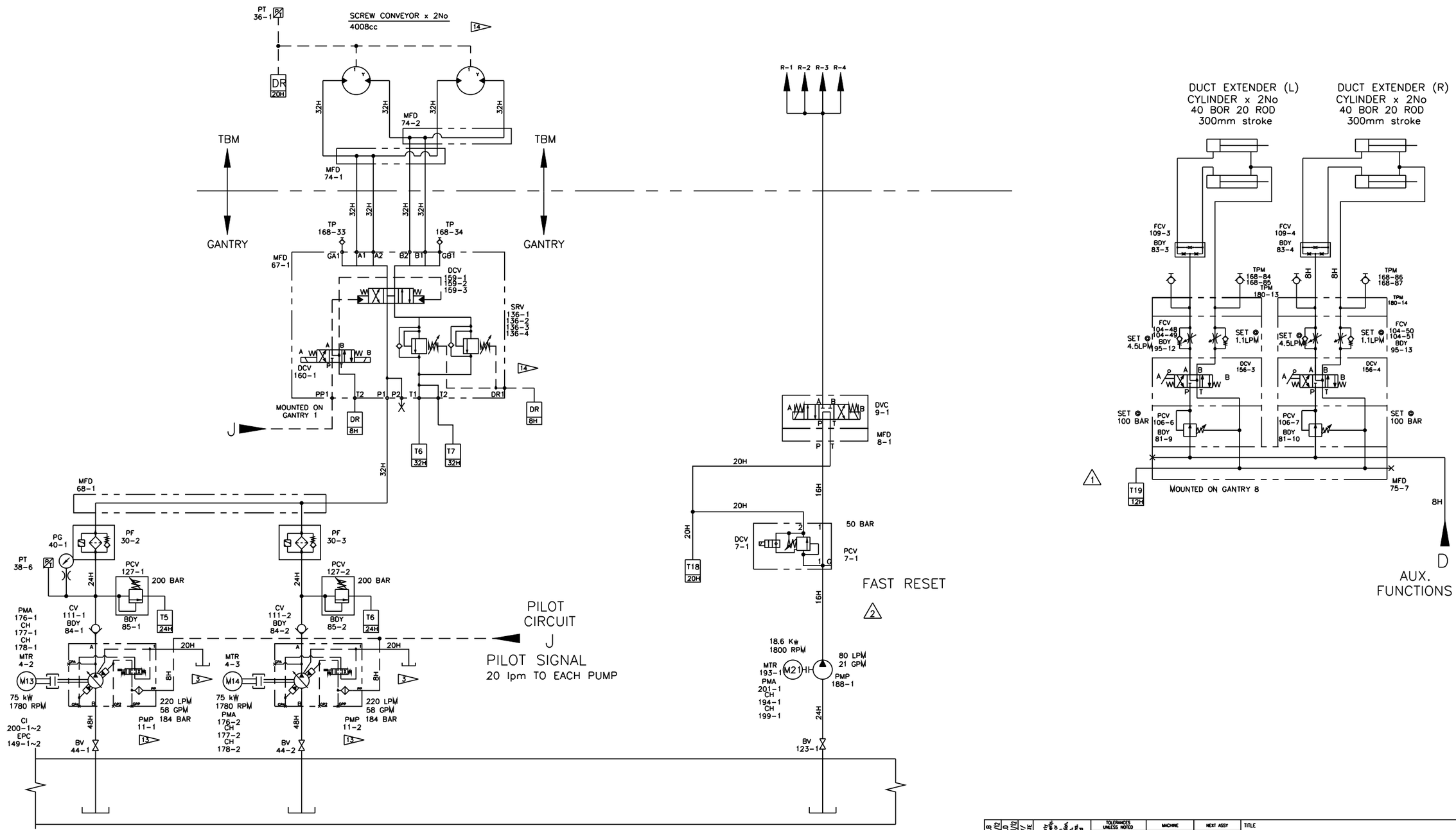

QTY. -1	PART No.	DESCRIPTION	WT. EA. lbs.	MATERIAL	ITEM

REV	DESCRIPTION	ZONE	BY/DATE
2	ADDED FAST RESET		DLB 9/8/12
1	ADDED DUCT EXTENDER.		DLD 5/21/12

PROPRIETARY NOTICE

The information disclosed hereon, is the sole property of the Robbins Company, and remains their sole property. It shall not be duplicated in full or part, used by, or disclosed to any other party without the prior written consent of the Robbins Company. By accepting this information, recipient agrees to abide in total with this notice, without any modification whatsoever to the conditions. This material is on loan only, and is to be returned upon request to the Robbins Company.

TOLERANCES UNLESS NOTED		
FAB (in)	0 - 1"	±1/16
	1" - 5"	±1/8
	5" - 20"	±1/4
	20" +	±1/2
FLAME CUT SIB/CLASS		
WELDING SIB/CLASS		
MACHINING (in)	FRACTIONS	±1/16
	.X	±.03
	.XX	±.015
	.XXX	±.005
	ANGLES	±1°
UNLESS OTHERWISE NOTED, ALL DIMENSIONS ARE SHOWN IN INCH		
MACHINING SIB/CLASS		

MACHINE	NEXT ASSY
EPB2016-376	
EPB2016-377	
W/O#	

DO NOT SCALE

THIRD ANGLE PROJECTION

ALL GEOMETRIC DIMENSIONING AND TOLERANCING PER ANSI Y14.5M-1982 AS APPLICABLE. DIMS (X) ARE REF

SCALE 1:1

TITLE

HYDRAULIC SCHEMATIC

SIZE D | DWG No 1045925 | REV 2 | SHT 3 OF 9 | ORIGIN ☒ Solon ☐ Kent ☐ Oak Hill

Phone: (440) 248-3303
Fax: (440) 248-1702

Robbins
THE ROBBINS COMPANY
29100 Hall Street
Solon, Ohio 44139 USA

DRAWN D.BUCKINGHAM DATE 1/16/2011
CHECKED D.DONLEY DATE 2/15/12

Kent, WA: Phone (253) 872-0500 Fax: (253) 872-0199
Oak Hill, WV: Phone (304) 465-5880 Fax: (304) 465-5886

1045925

QTY. -1	PART No.	DESCRIPTION	WT. EA. lbs.	MATERIAL	ITEM

BULKHEAD GATE CYLINDER X 2No
100 BOR 56 ROD
470mm stroke

SCREW SLIDE CYLINDER x 2No
140 BOR 80 ROD
660mm stroke

GATE CYLINDER x 2No
80 BOR 45 ROD
770mm stroke

AUX. FUNCTIONS
D

SEGMENT ADVANCE RAM
100 BOR 56 ROD
1900mm stroke

OUTER FRAME LIFT RAM
80 BORE 70 ROD
40mm stroke

OUTER FRAME LIFT RAMS
80 BORE 70 ROD
40mm stroke

PILOT CIRCUIT
J

FILTRATION UNIT
0.18kW
1.1GPM

CORRECTED CALLOUTS	DLB 5/21/12
REV	DESCRIPTION / ZONE / BY / DATE
1	

PROPRIETARY NOTICE
The information disclosed herein is the sole property of The Robbins Company. By accepting this drawing, it shall not be duplicated in full or part, used by, or disclosed to others for any purpose without the written consent of the Robbins Company. By accepting this information, the recipient agrees to abide by the foregoing restrictions. The recipient agrees to indemnify and hold harmless The Robbins Company for any damages resulting from the improper use of this information. This material is on loan only, and is to be returned to The Robbins Company upon request.

TOLERANCES UNLESS NOTED	
0 - 1"	±1/16
1" - 5"	±1/8
5" - 20"	±1/4
20" +	±1/2
FINE CUT SRD/CLASS	
WELDING SRD/CLASS	
MACHINING (In) FRACTIONS	±1/16
.X	±.03
.XX	±.015
.XXX	±.005
ANGLES	±1°

UNLESS OTHERWISE NOTED, ALL DIMENSIONS ARE SHOWN IN INCH

BEVELING SRD/CLASS

MACHINE	NEXT ASSY
EPB2016-376	
EPB2016-377	
W/Oil	

DO NOT SCALE

THIRD ANGLE PROJECTION

ALL GEOMETRIC DIMENSIONING AND TOLERANCING PER ANSI Y14.5M-1982 AS APPLICABLE.

DWG (X) ARE REF

SCALE 1:1

TITLE: HYDRAULIC SCHEMATIC

SIZE D | DWG No 1045925 | REV 1 | SHT 4 OF 9 | ORIGIN: Solon, Kent, Oak Hill

Robbins
THE ROBBINS COMPANY
29100 Hall Street
Solon, Ohio 44139 USA
Phone: (440) 248-3303
Fax: (440) 248-1702
Kent, WA: Phone (253) 872-0500 Fax: (253) 872-0199
Oak Hill, WV: Phone (304) 465-5880 Fax: (304) 465-5886

DRAWN: D.BUCKINGHAM 1/16/12 | CHECKED: D.DONLEY 2/15/12

1045925

QTY. –1	PART No.	DESCRIPTION	WT. EA. lbs.	MATERIAL	ITEM

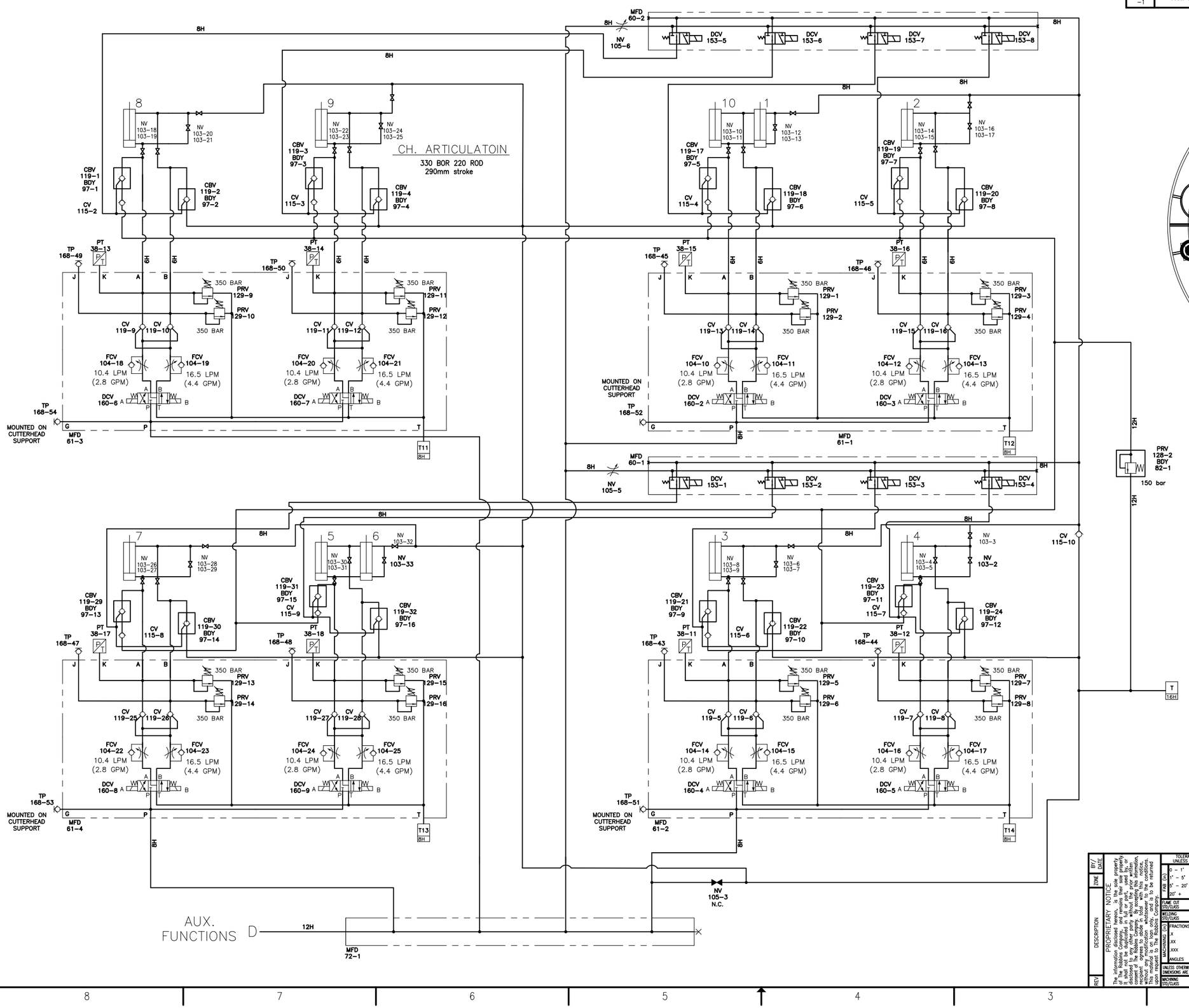

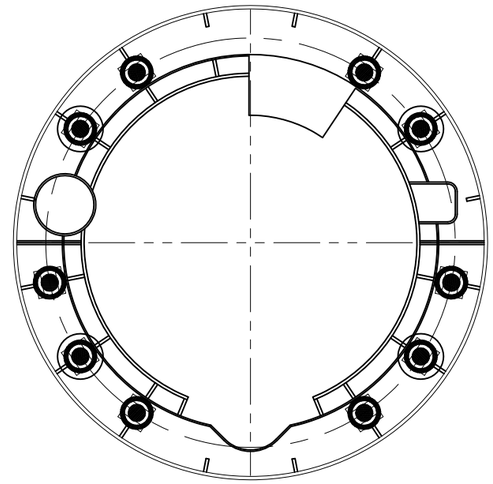

○ :STROKE SENSOR

PROPRIETARY NOTICE

The information contained in this drawing is the property of The Robbins Company, and may not be used, copied, disclosed, and remains their sole property. It shall not be duplicated in full or part, used by, or disclosed to others for any purpose without the written consent of The Robbins Company. By accepting this information, the recipient agrees to make every reasonable effort to protect the same and to prevent its use, disclosure, or reproduction without any modification whatsoever to the conditions. Upon request, this information is to be returned to The Robbins Company.

BY/ DATE	ZONE	DESCRIPTION	REV

TOLERANCES UNLESS NOTED

0 – 1"	±1/16
1" – 5"	±1/8
5" – 20"	±1/4
20" +	±1/2
FINE CUT 220/CLASS	
WELDING 270/CLASS	
FRACTIONS	±1/16
.X	±.03
.XX	±.015
.XXX	±.005
ANGLES	±1 °
UNLESS OTHERWISE NOTED, ALL DIMENSIONS ARE SHOWN IN INCH	
MACHINING 370/CLASS	

MACHINE	NEXT ASSY
EPB2016-376	
EPB2016-377	
w/O#	

DO NOT SCALE

THIRD ANGLE PROJECTION

ALL GEOMETRIC DIMENSIONING AND TOLERANCING PER ANSI Y14.5M–1982 AS APPLICABLE.

DIMS. IN () ARE REF.

SCALE 1:1

TITLE: HYDRAULIC SCHEMATIC

SIZE	DWG No	REV	SHT	ORIGIN
D	1045925	0	5 OF 9	☒ Solon ☐ Kent ☐ Oak Hill

Robbins
THE ROBBINS COMPANY
29100 Hall Street
Solon, Ohio 44139 USA
Phone: (440) 248-3303
Fax: (440) 248-1702
Kent, WA:
Phone (253) 872-0500
Fax: (253) 872-0199
Oak Hill, WV:
Phone (304) 465-5880
Fax: (304) 465-5886

DRAWN D.BUCKINGHAM 1/16/12

CHECKED D.DONLEY 2/15/12

1045925

QTY. -1	PART No.	DESCRIPTION	WT. EA. lbs.	MATERIAL	ITEM

ERECTOR ROTATE
MX250B0

COPY CUTTER CYL.
110 BOR 70 ROD
150mm stroke

WEAR DETECTION BIT

WEAR DETECTION BIT

WEAR DETECTION PIPE

RAPID SEGMENT UNLOADER
LIFT CYLINDER x 1No
175 BOR 75 ROD
1000mm stroke

RAPID SEGMENT UNLOADER
SUPPORT CYLINDER x 2No
40 BOR 20 ROD
155mm stroke

RAPID SEGMENT UNLOADER
LIFT CYLINDER x 1No
175 BOR 75 ROD
1000mm stroke

RAPID SEGMENT UNLOADER
FOOT CYLINDER x 2No
40 BOR 20 ROD
155mm stroke

ERECTOR A ERECTOR B

ERECTOR BRAKE

230 BAR

ROTARY JOINT

OPEN ONLY IN USE

MOUNTED INSIDE OF SHIELD

MOUNTED INSIDE OF TAIL SHIELD

PROBE DRILL
(SEE SCHEMATIC 1046386)

ERECTOR ROTATE ENABLE

MOUNTED ON POWER UNIT

135 LPM

55 kW
1800 RPM

210 BAR

CONNECT TO ERECTOR TO FILL.

26 lpm

11 kW
1800 RPM

COOLING WATER

MOUNTED ON GANTRY 1

MOUNTED ON GANTRY 2

CUSTOMER SUPPLY POWER UNIT

AUX. FUNCTIONS

REV	DESCRIPTION	ZONE	BY/ DATE
1	ADDED ERECTOR MANIFOLD ADDED COPY CUTTER RESERVOIR		DJB 5/21/12

PROPRIETARY NOTICE
The information disclosed herein, is the sole property of The Robbins Company. By accepting this drawing, it shall not be duplicated in full or part, used by, or disclosed to others for any purpose without the written consent of The Robbins Company. By accepting this information, recipient agrees to abide with this notice. This material is on loan only, and is to be returned upon request.

TOLERANCES UNLESS NOTED
FRACTIONS ±1/16
.x ±.03
.xx ±.015
.xxx ±.005
ANGLES ±1°
UNLESS OTHERWISE NOTED, ALL DIMENSIONS ARE SHOWN IN INCH

MACHINE: EPB2016-376, EPB2016-377
NEXT ASSY:
W/O#:
DO NOT SCALE
THIRD ANGLE PROJECTION
ALL GEOMETRIC DIMENSIONING AND TOLERANCING PER ANSI Y14.5M-1982 AS APPLICABLE.
DIMS (X) ARE REF
SCALE 1:1

TITLE: HYDRAULIC SCHEMATIC

SIZE D | DWG No 1045925 | REV 1 | SHT 6 OF 9

Phone: (440) 248-3303
Fax: (440) 248-1702
THE ROBBINS COMPANY
29100 Hall Street
Solon, Ohio 44139 USA
Kent, WA: Phone (253) 872-0500 Fax: (253) 872-0199
Oak Hill, WV: Phone (304) 465-5880 Fax: (304) 465-5886

ORION: Solon ☒ Kent ☐ Oak Hill ☐

DRAWN: D.BUCKINGHAM DATE 1/16/12 | CHECKED: D.DONLEY DATE 2/15/12

1045925

QTY. -1	PART No.	DESCRIPTION	WT. EA. lbs.	MATERIAL	ITEM

ERECTOR EXTENSION CYLINDER
100 BOR 56 ROD
850mm stroke

ERECTOR SLIDE CYLINDER
65 BOR 45 ROD
900mm stroke

ERECTOR HOLDING CYLINDER
50mm BOR 30mm ROD
40mm stroke

ERECTOR SEGMENT YAW
85mm BOR 45mm ROD
100mm stroke

ERECTOR SUPPORT CYLINDER A
114.3 BOR 88.9 ROD
80mm stroke

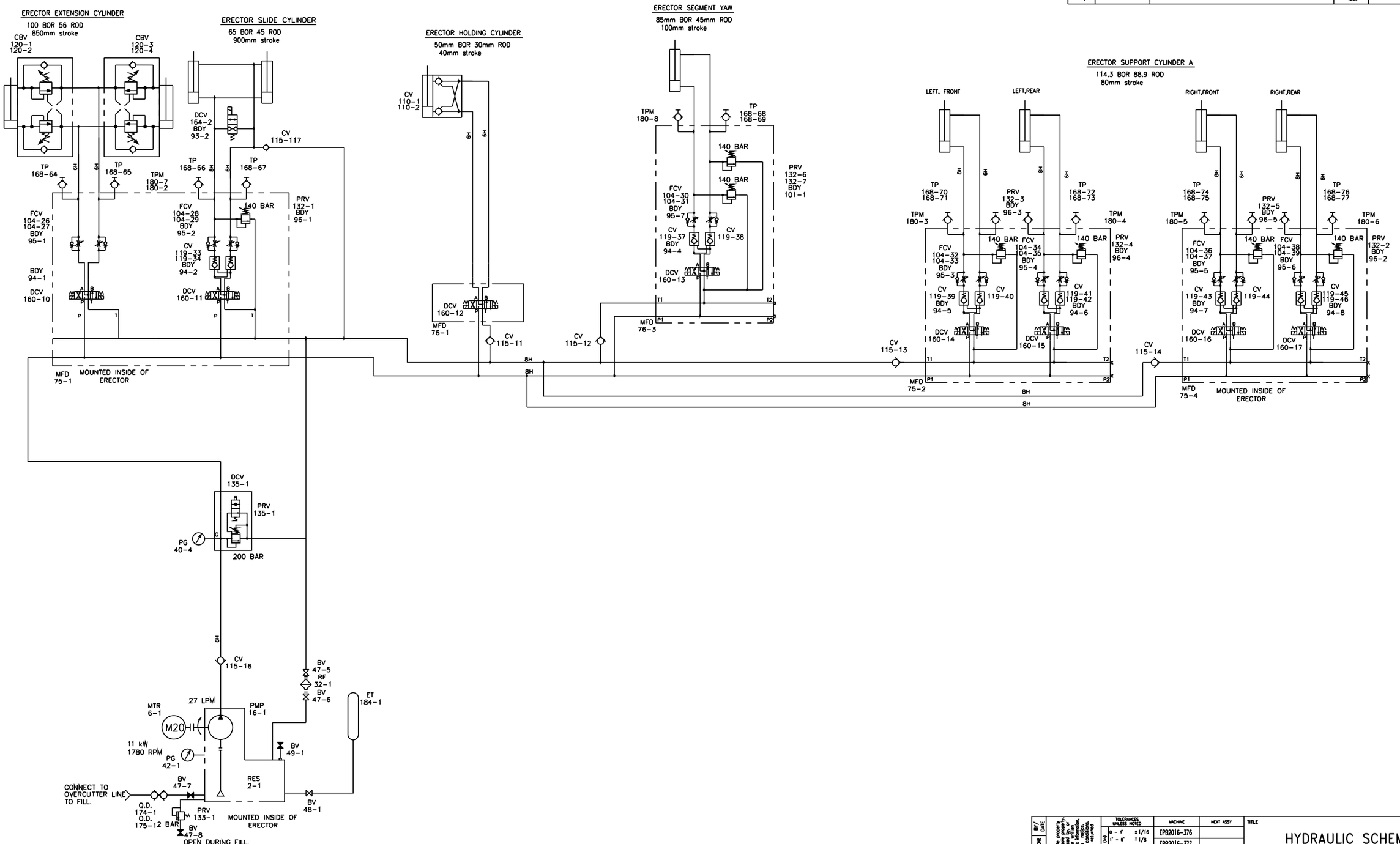

PROPRIETARY NOTICE
The information disclosed herein, is the sole property of The Robbins Company and is furnished in confidence; it shall not be duplicated in full or part, used by or disclosed outside the recipient's organization without the consent of The Robbins Company. By accepting this information, the recipient agrees to abide with the notice. Upon request, or when no longer needed for the purpose for which it was originally furnished, this material is to be returned to The Robbins Company.

TOLERANCES UNLESS NOTED	
0 - 1"	±1/16
1" - 5"	±1/8
5" - 20"	±1/4
20" +	±1/2
FAB (In)	
FLAME CUT SRD/CLASS	
WELDING SRD/CLASS	
MACHINING (In)	
FRACTIONS	±1/16
.X	±.03
.XX	±.015
.XXX	±.005
ANGLES	±1 °
SURFACE FINISH	125
BEDDING SRD/CLASS	

MACHINE	NEXT ASSY
EPB2016-376	
EPB2016-377	
UNLESS NOTED, ALL DIM'S ARE inch	
DO NOT SCALE	
THIRD ANGLE PROJECTION	
ALL GEOMETRIC DIMENSIONING AND TOLERANCING PER ANSI Y14.5M-1982 AS APPLICABLE. DIMS. (X) ARE REF	SCALE 1:1

BY/ DATE
ZONE
DESCRIPTION
REV

TITLE
HYDRAULIC SCHEMATIC

SIZE D | DWG No 1045925 | REV 0 | SHT 7 OF 9 | ORIGIN Spec Appl Ref Mtl

THE ROBBINS COMPANY
29100 Hall Street
Solon, Ohio 44139 USA
Phone: (440) 248-3303
Fax: (440) 248-1702

Kent, WA:
Phone (253) 872-0500
Fax: (253) 872-0199
Oak Hill, WV:
Phone (304) 465-5880
Fax: (304) 465-5886

ORIGIN: D.BUCKINGHAM DATE 1/16/12
CHECKED: D.DONLEY DATE 2/15/12

1045925

QTY. -1	PART No.	DESCRIPTION	WT. EA. lbs.	MATERIAL	ITEM
2	2001901	VALVE BODY			85
1	2001900	VALVE BODY			86
3	A99441-3	VALVE BODY			87
5	5750003263	VALVE BODY			88
3	A63937-1	VALVE BODY			89
3	A105031-1	VALVE BODY			90
1	A119084-1	MANIFOLD, ERECTOR ROTATE			91
1	A111604-1	VALVE BODY			92
7	A64355-1	VALVE BODY			93
9	A63825-1	VALVE BODY			94
13	A109954-2	VALVE BODY			95
5	A63828-1	VALVE BODY			96
16	A68914-1	VALVE BODY			97
5	5750001698	PRESSURE REDUCING VALVE			98
1	5750001699	PRESSURE REDUCING VALVE			99
2	5750001708	PREESURE REDUCING VALVE			100
1	A63829-1	VALVE BODY			101
16	5750001716	FLOW CONTROL			102
33	5750012216	NEEDLE VALVE			103
51	5750001715	FLOW CONTROL			104
6	A7349	NEEDLE VALVE			105
7	5750001702	REDUCING VALVE, T-11A			106
5	D66437-NFECLEN	FLOW CONTROL			107
1	A105024-1	FLOW DIVIDER			108
4	1050041	SYNCHRONIZER, FLOW DIVIDER			109
2	1034557	P.O CHECK VALVE			110
2	5750001638	CHECK VALVE			111
3	5750012256	CHECK VALVE			112
4	A76252-1	CHECK VALVE			113
1	5750012220	VALVE, CHECK			114
17	A108396-1	CHECK VALVE			115
1	A34183-2	CHECK VALVE			116
16	A78748-1	P.O. CHECK VALVE			117
8	5750002193	P.O. CHECK VALVE			118
44	5750001736	P.O. CHECK VALVE			119
4	1035561	COUNTERBALANCE VALVE, T-2A			120
2	5750001682	COUNTERBALANCE VALVE			121
2	2003815	COUNTERBALANCE VALVE, 4 PORT			122
1	A104965-3	BALL VALVE, SAE -24			123
2	2003816	COUNTERBALANCE VALVE, 4 PORT			124
2	5750000495	RELIEF VALVE			125
					126

QTY. -1	PART No.	DESCRIPTION	WT. EA. lbs.	MATERIAL	ITEM
1	~~A116964-3~~	~~BALL VALVE, 1/2" SAE~~			~~43~~
2	A104965-6	BALL VALVE, 3" BSPT			44
4	A104965-4	BALL VALVE, SAE -32			45
2	A104965-1	BALL VALVE, 1" SAE			46
8	A79867-3	BALL VALVE, 1/2"			47
1	A79867-4	BALL VALVE, 3/4"			48
1	A79867-1	BALL VALVE, 1/4"			49
1	2000142	BREATHER			50
2	2006784	LEVEL SENSOR, ULTRASONIC			51
					52
1	5750012223	TEMPERATURE GAUGE			53
2	2003900	TEPERATURE TRANSDUCER/ SWITCH			54
1	B44635-2C	LEVEL GAUGE			55
2	A120805-1	HEAT EXCHANGER, WATER/ OIL			56
3	2003350	PRESSURE TRANSDUCER/SWITCH 0- 158 bar			57
					58
1	B110002-2	MANIFOLD, FLOW CONTROL			59
2	2002236	MANIFOLD, PILOT			60
4	2001943	MANIFOLD, ARTRICULATOIN			61
1	2002788	MANIFOLD, THRUST FLOW CONTROL			62
					63
1	2001934	MANIFOLD, THRUST PRESSURE			64
5	2005324	MANIFOLD, THRUST CYLINDER 2 STATION			65
2	2005322	MANIFOLD, THRUST CYLINDER 3 STATION			66
1	2004210	MANIFOLD, SCREW CONV.			67
1	662-498	JUNCTION BLOCK			68
1	2001941	MANIFOLD, RELIEF CHECK			69
2	A103604-3	MANIFOLD, 3 STATION			70
1	A102155-2	MANIFOLD, HEADER			71
1	A102155-4	HEADER MANIFOLD			72
1	2001963	MANIFOLD, RELIEF & CHECK			73
2	2004207	JUNCTION MANIFOLD			74
7	A68912-2	MANIFOLD, 2 STATON D03			75
4	A68912-1	MANIFOLD, 1 STATION D03			76
1	A108442-1	SUBPLATE			77
1	5750002196	SUBPLATE			78
1	57500012218	CHECK VALVE, LINE MOUNT, -4			79
					80
10	5750002817	VALVE BODY			81
1	A63938-1	VALVE BODY			82
4	2002994	VALVE BODY			83
2	2003918	VALVE BODY			84

QTY. -1	PART No.	DESCRIPTION	WT. EA. lbs.	MATERIAL	ITEM
–					1
1	2005814	HYDRAULIC RESERVOIR, 132 LITER			2
1	2006773	HYDRAULIC RESERVOIR, 3300 LITER			3
3	2006659	ELECTRIC MOTOR, 75kW			4
2	A98841-1	ELECTRIC MOTOR, 55kW			5
3	A108609-1	MOTOR - ELECTRIC (15 HP)			6
1	1051891	VALVE ASSY, UNLOADING PRESSURE RELIEF			7
1	A76737-1	D05 STD FLOW PARALLEL			8
1	1051870	DIRECTION CONTROL VALVE, D05			9
1	2001888	VARIABLE DISPLACEMENT PUMP			10
2	2003916	VARIABLE DISPLACEMENT PUMP			11
1	2001909	VARIABLE DISPLACEMENT PUMP			12
1	2001890	VARIABLE DISPLACEMENT PUMP			13
1	2001920	VARIABLE DISPLACEMENT PUMP			14
1	2002992	GEAR PUMP			15
1	2005800	GEAR PUMP			16
1	A108689-1	PUMP/MOTOR ADAPTOR			17
1	A111903-1	PUMP/MOTOR ADAPTOR			18
1	2001978	PUMP/MOTOR ADAPTOR			19
1	A109998-3	PUMP/MOTOR ADAPTOR			20
1	A99153-1	PUMP/MOTOR ADAPTOR			21
2	A111901-1	COUPLING HALF, MOTOR			22
1	2002623	COUPLING HALF, PUMP			23
1	5750012202	COUPLING HALF, PUMP			24
2	A110000-4	COUPLING HALF, MOTOR			25
1	A110000-5	COUPLING HALF, PUMP			26
1	5750012200	COUPLING HALF, MOTOR			27
1	A99155-1	COUPLING HALF, PUMP			28
2	A113176-1	FILTRATION UNIT			29
7	2001898	PRESSURE FITLER			30
2	A105072-1	RETURN FILTER			31
1	2004653	RETURN FILTER			32
4	A113176-2	FITLER ELEMENT			33
2	5750009104	COUPLING INSERT			34
1	5750012199	COUPLING HALF			35
1	2003439	PRESSURE TRANSDUCER			36
1	2003344	PRESSURE TRANSDUCER			37
34	2003433	PRESSURE TRANSDUCER			38
6	A105043-17	PRESSURE GAUGE			39
4	A105043-15	PRESSURE GAUGE			40
1	A105043-10	PRESSURE GAUGE			41
1	A105043-6	PRESSURE GAUGE			42

ADDED ITEMS 7, 8, 9, 123 — DLB 9/9/12

ADDED ITEMS 51, 54, 79, 122, 34, 35, 94, 110, 25, 31 REVISED ITEMS 4, 76, 81, 83 PART NUMBER UPDATED ITEM 51 ITEM 83 WAS A94672-1, 109 WAS A74049-1 — DLB/DLD 5/21/12

REV | DESCRIPTION | BY/ DATE

PROPRIETARY NOTICE
The information disclosed herein, is the sole property of The Robbins Company, and is loaned subject to return upon demand, it shall not be duplicated in full or part, used by, or disclosed to others for any purpose without the written consent of The Robbins Company. By accepting this drawing, recipient agrees to abide with the conditions of this notice. This material is on loan only, and is to be returned upon demand to The Robbins Company.

TOLERANCES UNLESS NOTED
FINE (in): 0 - 1" ±1/16; 1" - 6" ±1/8; 6" - 20" ±1/4; 20" + ±1/2
COARSE (in) SRS/CLASS:
BELOW SRS/CLASS:
MACHINING (in): FRACTIONS ±1/16; .x ±.03; .xx ±.015; .xxx ±.005; ANGLES ±1°; SURFACE FINISH 125
BROKEN SRS/CLASS:

MACHINE: EPB2016-376; EPB2016-377
NEXT ASSY:
UNLESS NOTED, ALL DIM'S ARE inch
DO NOT SCALE
THIRD ANGLE PROJECTION
ALL GEOMETRIC DIMENSIONING AND TOLERANCING PER ANSI Y14.5M-1982 AS APPLICABLE.
DIMS (in) ARE REF
SCALE 1:1

TITLE: HYDRAULIC SCHEMATIC
SIZE D | DWG No 1045925 | REV 2 | SHT 8 OF 9
ORIGIN Solon Kent Oak Hill
ORIGIN D.BUCKINGHAM DATE 1/16/12
CHECKED D.DONLEY DATE 2/15/12

Robbins
THE ROBBINS COMPANY
29100 Hall Street
Solon, Ohio 44139 USA
Phone: (440) 248-3303
Fax: (440) 248-1702
Kent, WA: Phone (253) 872-0500 Fax: (253) 872-0199
Oak Hill, WV: Phone (304) 465-5880 Fax: (304) 465-5886

1045925

QTY. -1	PART No.	DESCRIPTION	WT. EA. lbs.	MATERIAL	ITEM
(1)	2006878	ERECTOR HOLDING CYL. MFD ASSY			211
(1)	2002787	THRUST THROTTLE MFD ASSY			212
(1)	2005507	ASSEMBLY, SEGMENT YAW			213
(1)	2001933	THRUST PRESSURE CONTROL MANIFOLD ASSY			214
(2)	2006839	THRUST CYL MFD ASSY, 3 STATION			215
(5)	2006840	THRUST CLY MFD ASSY, 2 STATION			216
(1)	2004209	SCREW CONVEYOR MANIFOLD ASSY			217
(1)	2001940	RELIEF CHECK MANIFOLD ASSY			218
(1)	2001945	SCREW CONV. CYL. MANIFOLD ASSY			219
(1)	2001948	SEGMENT FEEDER MANIFOLD ASSY			220
(4)	2001942	ARTICULATION MANIFOLD ASSY			221
(1)	B110002-1	COPY CUTTER FLOW CTRL MFD ASSY			222
(2)	2001950	ERECTOR SUPPORT CYL. MANIFOLD ASSY			223
(1)	2006873	ERECTOR EXTENSION CYL. MFD. ASSY			224
(1)	2001962	RELIEF CHECK MANIFOLD ASSY			225
(2)	2002335	PILOT VALVE MANIFOLD ASSY			226
(1)	D119082-1	MANIFOLD ASSY, ERECTOR ROTATE			227
(1)	2006789	POWER UNIT ASSY, 11kW			228
(1)	2002778	COPY CUTTER MFD ASSY			229

QTY. -1	PART No.	DESCRIPTION	WT. EA. lbs.	MATERIAL	ITEM
1	A93380-1	TRANSFER PUMP			169
1	5750001460	QUICK DISCONNECT (BODY)			170
1	5750001462	QUICK DISCONNECT (NOSE)			171
1	5750001461	QUICK DISCONNECT (PLUG)			172
1	5750001463	QUICK DISCONNECT (CAP)			173
1	A105910-5	SELF COUPLING, FEMALE 1/2"			174
1	A105910-7	SELF COUPLING, MALE 1/2"			175
2	2003915	PUMP/ MOTOR ADAPTOR			176
2	A99135-1	COUPLING HALF			177
2	2003914	COUPLING HALF, PUMP			178
3	A76747-54	TAPPING PLATE, D05			179
14	A76747-14	TAPPING PLATE, D03			180
1	A76747-75	TAPPING PLATE, D05 2 STATION			181
1	A91063-8	ACCUMULATOR			182
1	A109999-1	INTEGRATED FLOW METER			183
1	2001996	EXPANSION TANK			184
					185
~~1~~	~~A76433-18~~	~~COUPLING HALF~~			~~186~~
					187
1	A22610-1	PUMP, VANE			188
1	2002901	DUAL HALL EFFECT PICKUP			189
1	2002902	6-PIN CABLE			190
47	2001914	CONNECTOR/ CABLE 10m, M12			191
120	2001580	DIN CONNECTOR, 4m CABLE			192
1	1051689	ELECTRIC MOTOR, 25HP			193
1	A105056-1	COUPLING HALF			194
2	2003901	M18 x 1.5 ADAPTER			195
1	5750012203	COUPLING INSERT			196
2	A99156-1	COUPLING INSERT			197
~~1~~	~~A76433-2~~	~~COUPLING INSERT~~			~~198~~
1	1049468	COUPLING HALF			199
2	5750009104	COUPLING INSERT			200
1	1051736	PUMP/MOTOR ADAPTER			201
2	5750001679	COUNTERBALANCE VALVE - CBCA			202
1	1048583	VALVE BODY, SANDWICH			203
1	1048573	DIRECTIONAL CONTROL VALVE, D03			204
2	A104964-8	BALL VALVE, HP, -08			205
1	A110432-1	SIGHT GAUGE			206
1	A110431-1	HYDRAULIC RESERVOIR			207
1	2004471	LEVEL SWITCH			208
1	1048991	HEAT EXCHANGER, WATER/OIL			209
1	2004653	RETURN FILTER			210

QTY. -1	PART No.	DESCRIPTION	WT. EA. lbs.	MATERIAL	ITEM
18	5750002263	RELIEF VALVE			127
2	5750000493	RELIEF VALVE			128
16	5750000489	RELIEF VALVE			129
1	5750002262	RELIEF VALVE			130
1	5750002261	RELIEF VALVE			131
7	5750000487	RELIEF VALVE			132
1	2001995	RELIEF VALVE			133
4	5750012220	VALVE, CHECK			134
1	2001959	UNLOADING RELIEF VALVE			135
4	2001919	SEQUENCE VALVE			136
					137
1	A111945-1	PRESSURE COMPENSATOR			138
					139
2	D66438-CSAAEXN	SHUTTLE VALVE			140
1	2002917	PROPORTIONAL RED/REL CARTRIDGE			141
					142
4	2001937	PROPORTIONAL PRESS. REDUCING VALVE			143
1	1049877	PROPORTIONAL DIRECTIONAL VALVE W/ OB	ELEC.		144
1	2002916	PROPORTIONAL THROTTLE CARTRIDGE			145
1	A104910-1	PROPORTIONAL AMP. CARD			146
4	A114510-1	PROPORTIONAL AMP. CARD			147
~~1~~	~~A111946-1~~	~~PROPORTIONAL AMP. CARD~~			~~148~~
2	A110426-1	ELECTRONIC PUMP CONTROL			149
1	A105005-1	ELECTRICAL CONNECTOR PROP. VALVE			150
					151
2	A121112-1	SOLENOID VALVE POPPET, 2-WAY			152
8	2002234	DIRECTIONAL VALVE			153
					154
3	A76674-59	DIRECTIONAL VALVE			155
4	A106005-1	DIRECTIONAL CONTROL VALVE, D03			156
2	A111170-1	DIRECTIONAL CONTROL VALVE			157
3	2004393	DIRECTIONAL VALVE			158
3	5750005691	DIRECTIONAL VALVE			159
17	5750005738	DIRECTIONAL VALVE			160
6	5750005730	DIRECTIONAL VALVE			161
1	2001926	DIRECTIONAL VALVE			162
1	2000206	DIRECTIONAL VALVE			163
4	2001924	DIRECTIONAL VALVE			164
16	2000444	DIRECTIONAL VALVE			165
16	2003434	PRESSURE SWITCH			166
16	5750001626	CHECK VALVE			167
87	5750001337	MINICHECK COUPLING			168

REV	DESCRIPTION	ZONE	BY/ DATE
2	ADDED ITEMS 134, 193, 194, 201		DLB 08/09/12
1	ADDED 140,196,202 ~ 210,156 REVISED ITEMS 148,196,198 ITEM 157 WAS A101440-1		DLB/DLD 9/21/12

PROPRIETARY NOTICE

The information disclosed herein, is the sole property of The Robbins Company. By accepting this information, it shall not be duplicated in full or part, used by or disclosed outside the recipient's organization without the consent of the Robbins Company. By accepting this information, the recipient agrees to retain same in confidence and to protect it from loss, misuse, alteration, unauthorized access or theft. This material is on loan only, and is to be returned to The Robbins Company upon request.

TOLERANCES UNLESS NOTED

FAB (Pt)	
0 - 1"	±1/16
1" - 5"	±1/8
5" - 20"	±1/4
20" +	±1/2

FLAME CUT SEQ/CLASS

WELDING SEQ/CLASS

MACHINING (In)	
FRACTIONS	±1/16
.X	±.03
.XX	±.015
.XXX	±.005
ANGLES	±1 °
SURFACE FINISH	125

BEDDING SEQ/CLASS

MACHINE	NEXT ASSY
EPB2016-376	
EPB2016-377	

UNLESS NOTED, ALL DIM'S ARE inch

DO NOT SCALE

THIRD ANGLE PROJECTION

ALL GEOMETRIC DIMENSIONING AND TOLERANCING PER ANSI Y14.5M-1982 AS APPLICABLE.

DIMS. (A) ARE REF

SCALE 1:1

TITLE: HYDRAULIC SCHEMATIC

SIZE D | DWG No 1045925 | REV 2 | SHT 9 OF 9

THE ROBBINS COMPANY
29100 Hall Street
Solon, Ohio 44139 USA
Phone: (440) 248-3303
Fax: (440) 248-1702

Kent, WA:
Phone (253) 872-0500
Fax: (253) 872-0199
Oak Hill, WV:
Phone (304) 465-5880
Fax: (304) 465-5886

ORIGIN D.BUCKINGHAM DATE 1/16/12 | CHECKED D.DONLEY DATE 2/15/12

1045925

QTY	PART No.	DESCRIPTION	DWG No.	WT. Total	ITEM
12	A22157-3	WASHER, SM OD M10	A22157	0.0 kg	87
3	2004393	DIRECTIONAL VALVE, CARTRIDGE	2004393	2.3 kg	88
8	663-060	NUT, BHLN Ø1/2"		0.2 kg	89
4	627-007	NUT, JAM Ø5/8"-11 UNC G5		0.1 kg	90
20	633-008	WASHER, PLAIN Ø5/8"		0.2 kg	91
12	A22151-31305	HHCS, M10x130mm C8.8	A22151	1.1 kg	92
8	2002245	08MJ-08MJ BULKHEAD 90°	2002239	1.1 kg	93
2	2001499	SPLIT FLANGE KIT, -48 CODE 61	2001491	3.9 kg	94
2	2005746	HOSE BARB, WELDMENT	2005746	11.2 kg	95
3	A22158-1	WASHER, HD NW OD M6	A22158	0.0 kg	96
21	2001507	SPLIT FLANGE KIT, -24 CODE 62	2001502	40.2 kg	97
2	A121306-6	SAE TO HOSE ADAPTER, 90° 3"	A121306	27.7 kg	98
2	663-062	NUT, BHLN Ø3/4"		0.1 kg	99
3	A22151-10405	HHCS, M6x40mm C5.6	A22151	0.0 kg	100
1	663-064	NUT, BHLN Ø1"		0.1 kg	101
3	A64355-1	VALVE BODY	A64355	1.3 kg	102
1	2002251	16MJ-16MJ BULKHEAD 90°	2002239	0.5 kg	103
3	2001497	SPLIT FLANGE KIT	2001491	2.7 kg	104
2	2001508	SPLIT FLANGE KIT, -32 CODE 62	2001502	6.6 kg	105
3	2001506	SPLIT FLANGE KIT, -20 CODE 62	2001502	3.5 kg	106
2	A104973-4	PORT ADAPTER FITTING, 2" SF-HB90	A104973	6.2 kg	107
1	5750012199	COUPLING HALF	5750012199	0.8 kg	108
2	5750009104	COUPLING INSERT	5750009104	0.3 kg	109
1	2002004	12MAORB- 12ORB STRAIGHT	2001997	0.2 kg	110
16	603-151	HB, Ø5/8"-18 UNFx1-1/2" G5		1.6 kg	111
4	A22152-20305	HHCS, M8x30mm C8.8	A22152	0.1 kg	112
1	2006437	RAPID SEGMENT UNLOADER MFD. ASSY	2006437	13.8 kg	113
8	A22157-2	WASHER, SM OD M8	A22157	0.0 kg	114
2	2002137	HOLLOW HEX PLUG, 5/8"	2002128	0.1 kg	115
8	A22154-25	NUT, M8 C8	A22154	0.0 kg	116
4	646-207	PIPE PORT, O-RING NPT Ø3" C61		8.7 kg	117
16	612-490	SHCS, Ø5/8"-11UNCx2.0" G8		2.0 kg	118
16	636-015	WASHER, HVY LOCK Ø5/8"		0.2 kg	119
1	2006831	RAPID SEGMENT UNLOADER MFD. ASSY	2006831	13.4 kg	120
8	A82384-2	WASHER, LOCK M8	A82384	0.0 kg	121
2	2000806	12MJ-10MORB	2000760	0.3 kg	122
8	2000790	08MJ-08MORB	2000760	0.5 kg	123
2	2000791	08MJ-10MORB	2000760	0.2 kg	124
1	651-456	PLUG, HOLLOW HEX 10MORB		0.1 kg	125
3	A121306-4	HOSE BARB, SAE -32, 90°	A121306	4.7 kg	126
4	1047768	FLANGE ADAPTER, CODE 62	1047768	12.6 kg	127

QTY	PART No.	DESCRIPTION	DWG No.	WT. Total	ITEM
12	603-101	HB, Ø1/2"-20 UNFx1" G5		0.6 kg	44
2	609-102	HHCS, Ø1/2"-13 UNCx1-1/4" G5		0.1 kg	45
72	A22158-4	WASHER, HD NW OD M12	A22158	0.5 kg	46
8	A22151-40455	HHCS, M12x45mm G8.8	A22151	0.5 kg	47
32	A22158-6	WASHER, HD NW OD M20	A22158	0.7 kg	48
8	A22154-48	NUT, M12 C10	A22154	0.1 kg	49
12	A22152-60655	HHCS, M20x65mm C8.8	A22152	2.8 kg	50
12	A22154-68	NUT, M20 C10	A22154	0.8 kg	51
8	A22152-30305	HHCS, M10x30mm G8.8	A22152	0.2 kg	52
12	A22158-3	WASHER, HD NW OD M10	A22158	0.0 kg	53
4	A22154-35	NUT, M10 C8	A22154	0.0 kg	54
2	609-002	HHCS, Ø1/4"-20 UNCx5/8" G5		0.0 kg	55
2	A22152-20125	HHCS, M8x12mm C8.8	A22152	0.0 kg	56
22	A22158-2	WASHER, HD NW OD M8	A22158	0.0 kg	57
4	633-002	WASHER, PLAIN Ø1/4"		0.0 kg	58
6	633-004	WASHER, PLAIN 3/8"		0.0 kg	59
28	A22152-41005	HHCS, M12x100mm C8.8	A22152	3.0 kg	60
28	A22154-45	NUT, M12 C8	A22154	0.5 kg	61
16	633-006	WASHER, PLAIN Ø1/2"		0.2 kg	62
1	A104974-4	CD 61 FLANGE TO HOSE BARB, 2"	A104974	0.5 kg	63
2	609-001	HHCS, Ø1/4"-20 UNCx1/2" G5		0.0 kg	64
16	A22152-20255	HHCS, M8x25mm C8.8	A22152	0.3 kg	65
8	A22154-28	NUT, M8 C10	A22154	0.0 kg	66
1	5750012220	CHECK VALVE, SAE -16	5750012220	1.2 kg	67
1	A105043-10	PRESSURE GAUGE, 0-600 PSI	A105043	0.7 kg	68
3	A105043-15	PRESSURE GAUGE, 0-4000 PSI	A105043	2.1 kg	69
1	2001505	SPLIT FLANGE KIT, -16 CODE 62	2001502	0.8 kg	70
2	2006672	PUMP/MOTOR ASSEMBLY, 100 HP	2006672	1435.7 kg	71
2	2003020	2.5" PIPE CLAMP	2003020	1.8 kg	72
8	600-181	HB, Ø3/4"-10 UNCx3" G8		1.9 kg	73
8	633-009	WASHER, PLAIN Ø3/4"		0.2 kg	74
2	2003920	BLANKING FLANGE, CODE 62, 2"	2003920	7.3 kg	75
2	2003919	CECK VALVE MANIFOLD ASSEMBLY	2003919	39.0 kg	76
1	2006025	SUCTION HEADER	2006025	33.8 kg	77
2	A120805-1	HEAT EXCHANGER, WATER/OIL	A120805	226.8 kg	78
8	A22159-3	WASHER, LOCK M10	A22159	0.0 kg	79
8	A22152-30255	HHCS, M10x25mm C8.8	A22152	0.2 kg	80
8	A22151-60655	HHCS, M20x65mm C8.8	A22151	1.9 kg	81
12	A82384-6	WASHER, LOCK M20	A82384	0.2 kg	82
12	A22154-65	NUT, M20 C8	A22154	0.8 kg	83
4	A101443-7	MANIFOLD, HEADER	A101443	146.2 kg	84
2	2002247	12MJ-12MJ BULKHEAD 90°	2002239	0.6 kg	85
1	662-498	TEE, JUNC BL FLAT 1-1/2" C62		8.2 kg	86

QTY	PART No.	DESCRIPTION	DWG No.	WT. Total	ITEM
1	2006671	HYD. FRAME ASSEMBLY	2006671	1223.0 kg	1
2	A98841-1	ELECTRIC MOTOR, 75HP	A98841	770.3 kg	2
1	2006659	ELECTRIC MOTOR - 100HP/60HZ	2006659	544.7 kg	3
1	2001888	VARIABLE DISPLACEMENT PUMP	2001888	49.6 kg	4
1	2001890	VARIABLE DISPLACEMENT PUMP	2001890	49.6 kg	5
2	A108609-1	MOTOR, ELECTRIC (15 HP)	A108609	253.7 kg	6
1	2001909	VARIABLE DISPLACEMENT PUMP	2001909	30.9 kg	7
1	2001920	VARIABLE DISPLACEMENT PUMP	2001920	14.5 kg	8
1	2002992	GEAR PUMP	2002992	16.8 kg	9
7	2001898	PRESSURE FILTER	2001898	271.7 kg	10
2	A105043-17	PRESSURE GAUGE, 0-6000 PSI	A105043	1.4 kg	11
2	2001901	VALVE BODY	2001901	28.1 kg	12
2	5750002263	RELIEF VALVE, T-16A	5750001663	1.3 kg	13
1	A111604-1	VALVE BODY	A111604	0.8 kg	14
1	5750002261	RELIEF VALVE, T-10A	5750000486	0.1 kg	15
1	2001900	VALVE BODY	2001900	0.6 kg	16
1	5750000493	RELIEF VALVE, T-3A	5750000492	0.3 kg	17
1	5750012202	COUPLING	5750012202	2.2 kg	18
1	2002852	COUPLING HALF	2002852	0.8 kg	19
2	A105199-1	PUMP COUPLING	A105199	1.2 kg	20
1	5750012200	COUPLER	5750012200	2.2 kg	21
2	A110000-4	COUPLING	A110000	0.5 kg	22
1	A110000-5	COUPLING	A110000	0.3 kg	23
1	2001948	MFD ASSY, SEGMENT FEEDER	2001948	63.9 kg	24
1	A108689-1	PUMP/MOTOR ADAPTOR	A108689	18.2 kg	25
2	A109998-3	PUMP/MOTOR ADAPTOR	A109998	36.4 kg	26
1	A108396-1	CHECK VALVE	A108396	0.2 kg	27
1	2002787	THRUST THROTTLE MFD ASSY	2002787	14.3 kg	28
1	2001940	RELIEF CHECK MANIFOLD ASSY	2001940	28.3 kg	29
1	2001962	RELIEF CHECK MFD ASSY	2001962	12.0 kg	30
1	2001978	PUMP/MOTOR ADAPTOR	2001978	4.8 kg	31
1	A99153-1	PUMP/MOTOR ADAPTOR	A99153	5.6 kg	32
1	2006741	SUCTION HEADER	2006741	200.6 kg	33
2	2000234	PIPE CLAMP, 6", WELD PLATE TYPE	2000234	158.0 kg	34
1	5750012203	COUPLING INSERT	5750012203	0.5 kg	35
1	A99155-1	COUPLING	A99155	0.3 kg	36
2	A99156-1	COUPLING INSERT	A99156	0.1 kg	37
1	A104965-1	BALL VALVE, SAE -16	A104965	0.5 kg	38
4	A104965-4	BALL VALVE, SAE 32	A104965	8.0 kg	39
2	A104965-6	BALL VALVE, 3" BSP	A104965	11.7 kg	40
2	A113176-1	OFFLINE FILTRATION UNIT	A113176	51.2 kg	41
6	609-053	HHCS, Ø3/8"-16 UNCx1" G5		0.1 kg	42
2	609-103	HHCS, Ø1/2"-13 UNCx2" G5		0.1 kg	43

NOTES:
1. POWER UNIT SHALL BE PLUMBED TO HYDRAULIC SCHEMATIC.
2. KEEP ALL PORTS PLUGGED UNTIL FINAL ASSEMBLY.
3. PAINT SPECIFICATIONS: SHERWIN WILLIAMS KEM AQUA
   GREY PRIMER E61WXA
   PAINT: WHITE ENAMEL F75WC501
4. MAKE SURE ALL SUCTION PORTS ARE OPEN AND ALL CASE DRAINS ARE FILLED BEFORE MOTOR ROTATION.

PROPRIETARY NOTICE
This information disclosed herein, is the sole property of Robbins Company and may not be copied or used in whole or in part, used by or disclosed to any Company. By accepting this information, recipient agrees to hold it in confidence and to use it solely for the purpose for which it was supplied. This material is on loan only, and shall be returned to Robbins Company upon request.

MACHINE	NEXT ASSY
EPB2016-376	1047541
EPB2016-377	1047542

UNLESS NOTED ALL DIMS ARE mm
TOLERANCES UNLESS NOTED

0-300	±1.5	X	±1.5
300-1500	±3	X.X	±1.0
1500-6000	±6	X.XX	±.40
6000+	±12	X.XXX	±.100
		ANGLES	±1°
		SURFACE FINISH	

DIMENSIONS (X) ARE REF.
ALL GEOMETRIC DIMENSIONING & TOLERANCING PER ANSI Y14.5-2009

REV	DESCRIPTION	REV'D BY/ DATE	APP'D BY/ DATE

TITLE: POWER UNIT ASSEMBLY

SIZE	DWG No.	REV	SHT.	SCALE
D	2006668	0	1 OF 3	SEE DETAIL

DO NOT SCALE

DRAWN BY	CHECKED STANDARDS
D.BUCKINGHAM	D.DONLEY
DATE	CHECKED DESIGN
2/7/2012	D.DONLEY
WEIGHT TOTAL	APPROVED BY
6122.6 kg	J.HEINEMAN
	DATE 2/7/2012

Robbins
www.TheRobbinsCompany.com

2006668

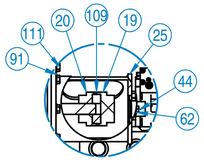

DETAIL C
1:10

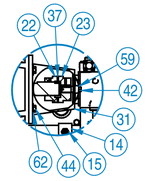

DETAIL E
1:10

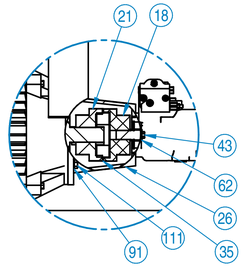

DETAIL B
1:10

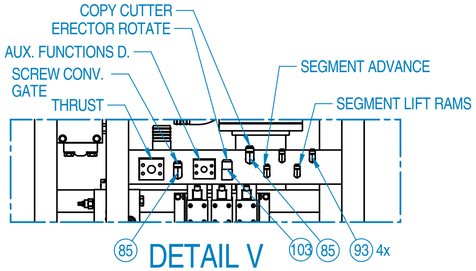

DETAIL V
1:10
VIEW ROTATED CW 90°.

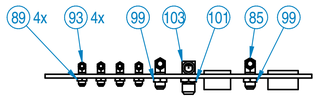

SECTION X-X
1:8
VIEW ROTATED 90°

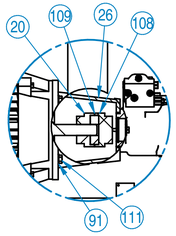

DETAIL D
1:10

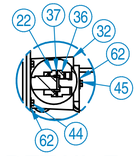

DETAIL F
1:10

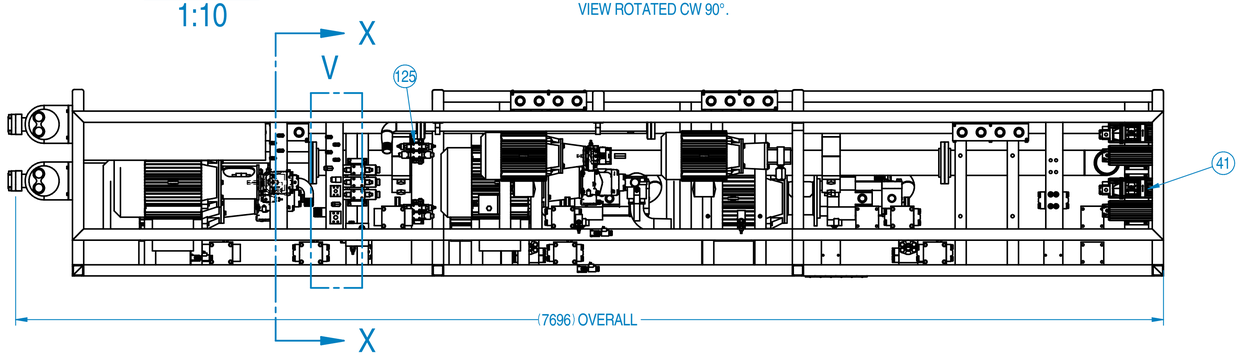

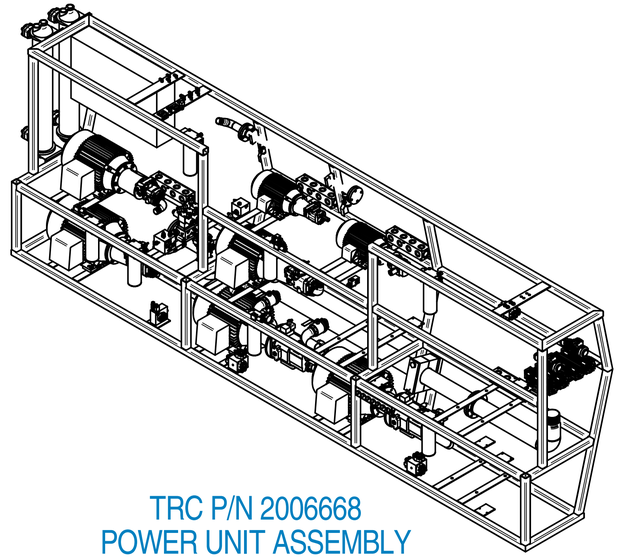

TRC P/N 2006668
POWER UNIT ASSEMBLY
1:30

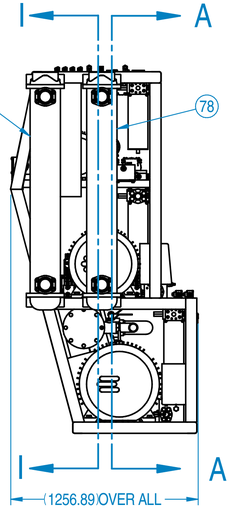

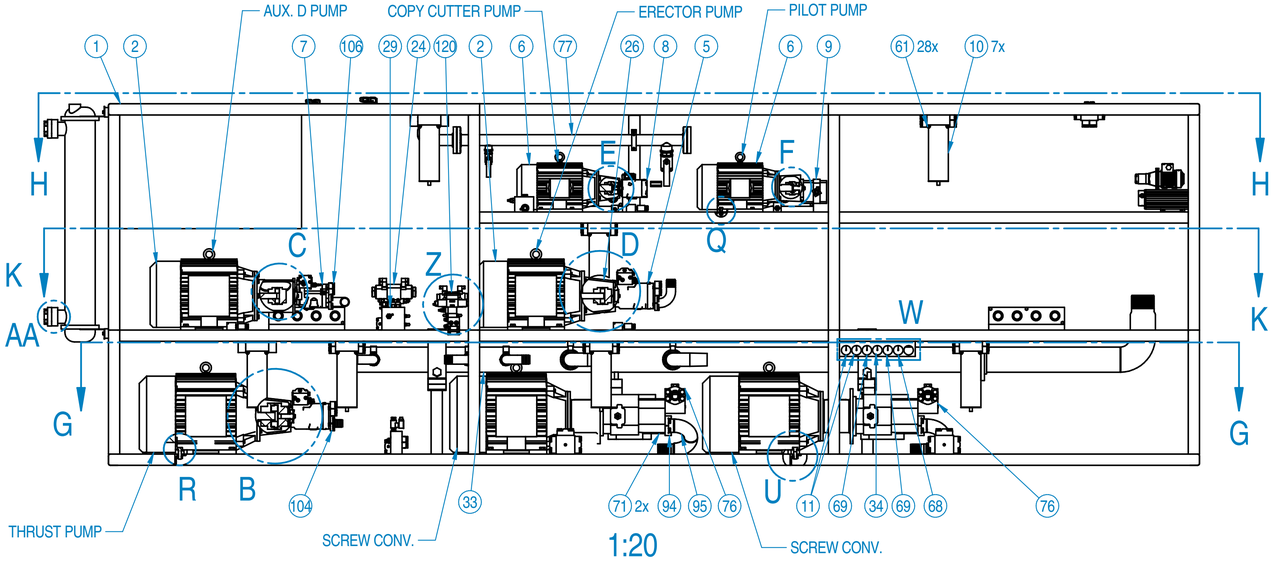

1:20

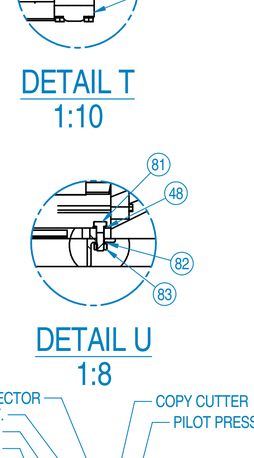

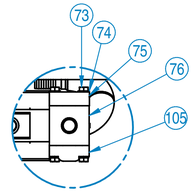

DETAIL T
1:10

DETAIL U
1:8

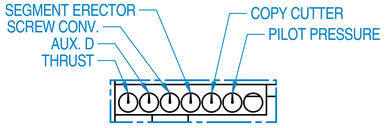

DETAIL W
1:10

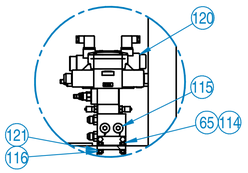

DETAIL Z
1:8

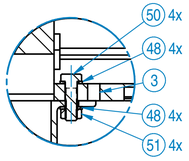

DETAIL R
1:5
TYPICAL EACH 55 & 75 KW
MOTOR ASSY.

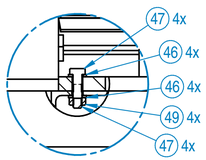

DETAIL Q
1:4
TYPICAL EACH 11 KW
MOTOR ASSY.

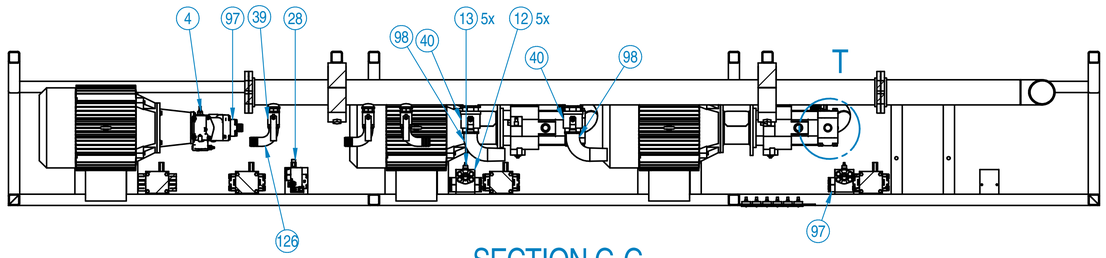

SECTION G-G
1:20

PROPRIETARY NOTICE
The information disclosed herein, is the sole property of The Robbins Company. It is not to be disclosed to a third party, nor to be duplicated in full or part, used by or disclosed to any Company. By accepting this information, recipient agrees to use it only for the purpose for which it was specifically furnished by whatsoever to the conditions. This material is on loan only, and upon request is to be returned to The Robbins Company.

MACHINE	NEXT ASSY
EPB2016-376	1047541
EPB2016-377	1047542

UNLESS NOTED ALL DIMS ARE mm.
TOLERANCES UNLESS NOTED

0-300	±1.5	X	±1.2
300-1500	±3	X.X	±1.0
1500-6000	±6	X.XX	±.40
6000+	±12	X.XX	±.100
		ANGLES	±1°
THIRD ANGLE PROJECTION		SURFACE FINISH	

DIMENSIONS (X) ARE REF.
ALL GEOMETRIC DIMENSIONING & TOLERANCING PER ANSI Y14.5-2009

REV	DESCRIPTION	REV'D BY DATE	APP'D BY DATE

TITLE: POWER UNIT ASSEMBLY

SIZE	DWG No.	REV	SHT	SCALE
D	2006668	0	2 of 3	SEE DETAIL
				DO NOT SCALE

DRAWN BY	D.BUCKINGHAM	CHECKED STANDARDS
DATE	2/7/2012	D.DONLEY
WEIGHT TOTAL	6122.6 kg	CHECKED DESIGN D.DONLEY
		APPROVED BY J.HEINEMAN
		DATE 2/7/2012

Robbins
www.TheRobbinsCompany.com

2006668

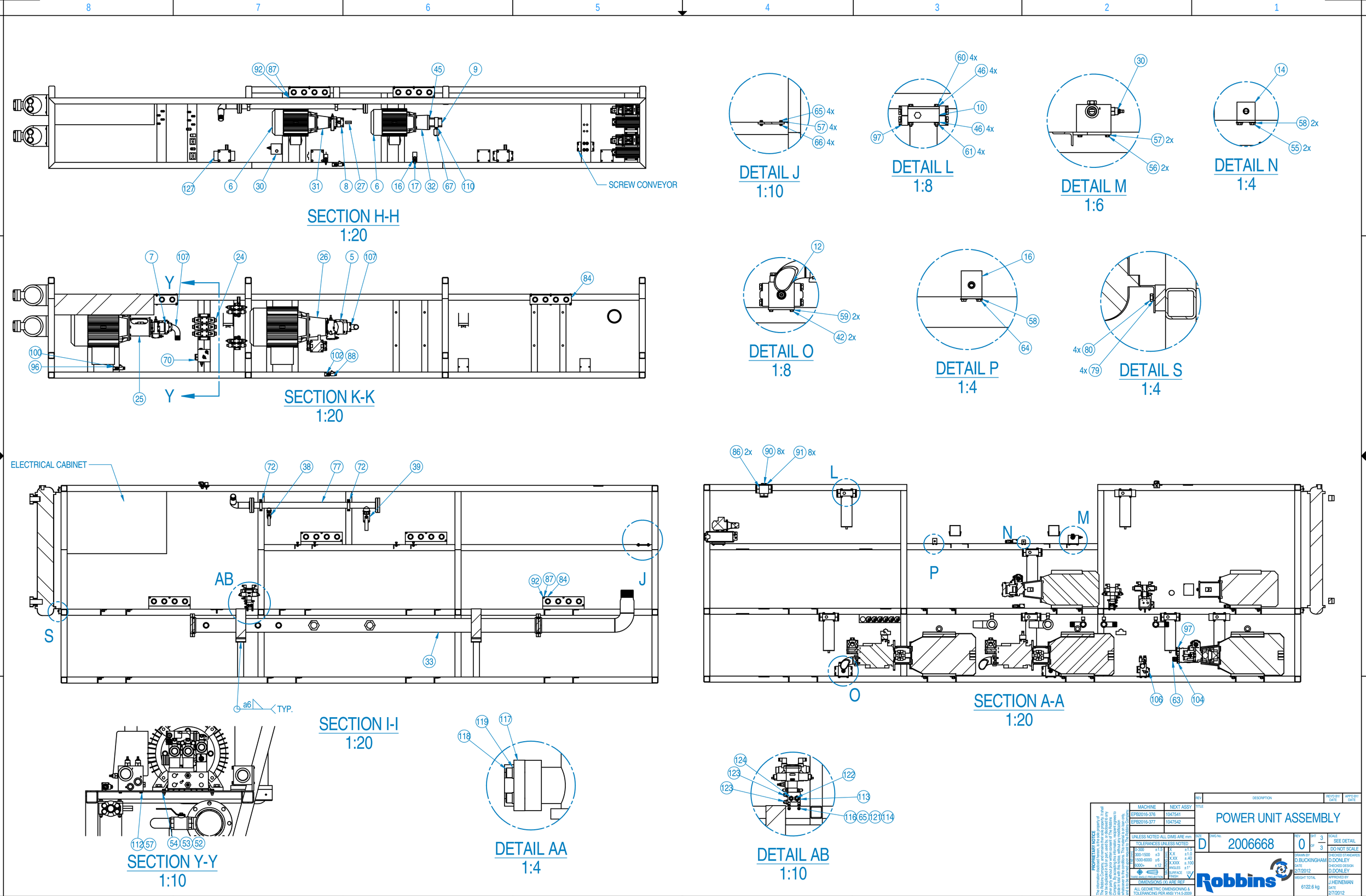

MACHINE	NEXT ASSY
EPB2016-376	1047541
EPB2016-377	1047542

UNLESS NOTED ALL DIMS ARE mm

TOLERANCES UNLESS NOTED

0-300	±1.5	X	±1.5
300-1500	±3	X.X	±1.0
1500-6000	±6	X.XX	±.40
6000+	±12	X.XXX	±.100
		ANGLES	±1°
		SURFACE FINISH	125

THIRD ANGLE PROJECTION

DIMENSIONS (X) ARE REF

ALL GEOMETRIC DIMENSIONING & TOLERANCING PER ANSI Y14.5-2009

REV	DESCRIPTION	REV'D BY DATE	APP'D BY DATE

TITLE: POWER UNIT ASSEMBLY

SIZE: D | DWG No. 2006668 | REV 0 | SHT 3 OF 3 | SCALE SEE DETAIL

DO NOT SCALE

DRAWN BY D.BUCKINGHAM DATE 2/7/2012

CHECKED STANDARDS D.DONLEY

CHECKED DESIGN D.DONLEY

WEIGHT TOTAL 6122.6 kg

APPROVED BY J.HEINEMAN DATE 2/7/2012

Robbins

www.TheRobbinsCompany.com

PROPRIETARY NOTICE

The information disclosed herein is the sole property of The Robbins Company, and remains the sole property of it shall not be duplicated in full or part, used, or disclosed to any other party without prior written consent of The Robbins Company. By accepting this information, recipient agrees to abide in fact with this notice, without any modification whatsoever to the conditions. This material is on loan only, and is to be returned upon request to The Robbins Company.

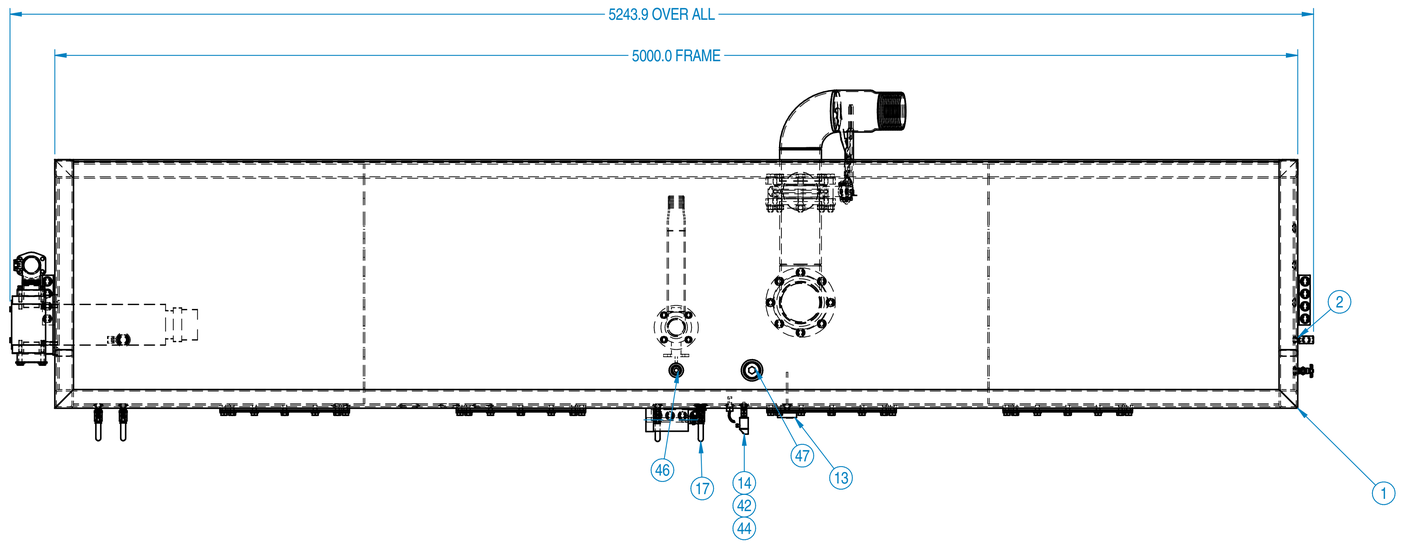

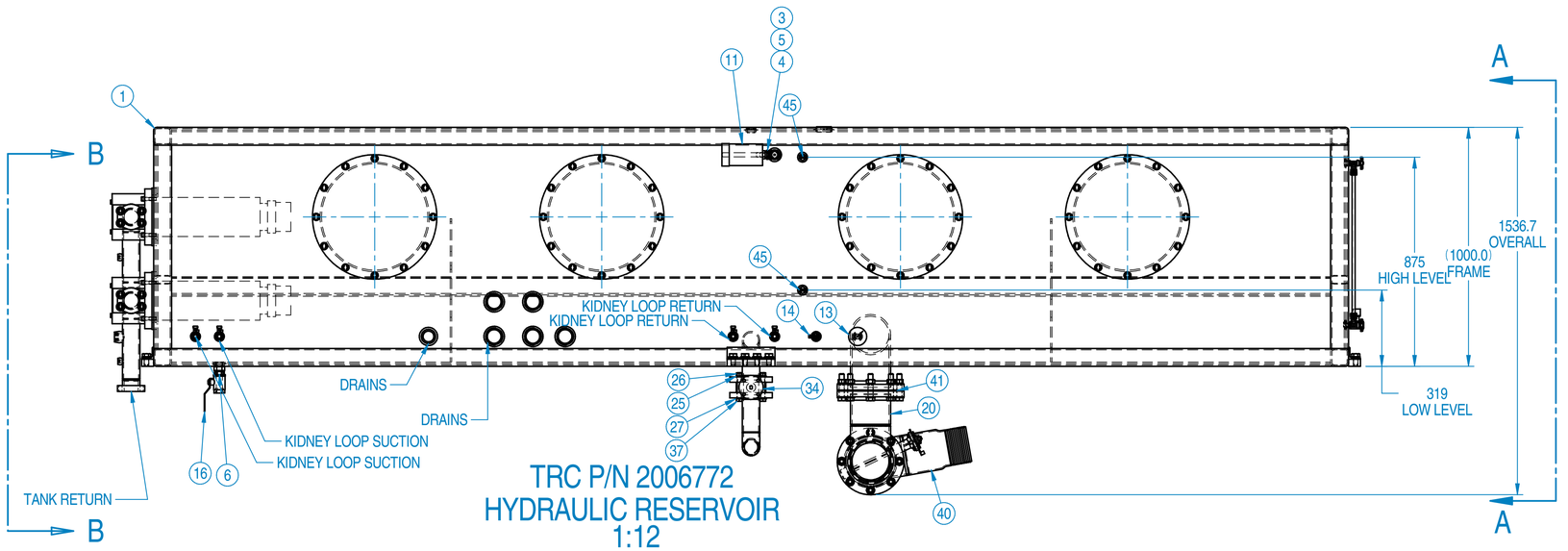

TRC P/N 2006772
HYDRAULIC RESERVOIR
1:12

QTY	PART No.	DESCRIPTION	DWG No.	WT. Total	ITEM
1	2006773	FRAME, HYDRAULIC RESERVOIR	2006773	1172.3 kg	1
1	672-318	9/16"-18MORB X 3/8"-18NPT	-	0.0 kg	2
1	2001134	16MP-12FP REDUCER BUSHING	2001119	0.1 kg	3
1	A108565-5	90 DEGREE ELBOW, 3/4"	A108565	0.3 kg	4
1	2000143	BREATHER ADAPTER	2000143	0.1 kg	5
1	A109749-6	THREAD ADAPTER 16MORB-16MP	A109749	0.2 kg	6
4	A108561-4	CLOSE NIPPLE, 1/2" NPT	A108561	0.1 kg	7
1	B44635-2C	LEVEL GAUGE ASSEMBLY	B44635	0.7 kg	8
1	5750012216	NEEDLE VALVE, SAE-6	5750012216	0.2 kg	9
2	A105072-1	RETURN FILTER, HYDRAULIC	A105072	33.8 kg	10
1	2000142	BREATHER ELEMENT	2000142	1.5 kg	11
1	5750012223	THERMOMETER, MODEL-A, 3"	5750012223	0.6 kg	13
1	2003900	TEMPERATURE TRANSDUCER/SWITCH	2003900	0.2 kg	14
1	A104965-1	BALL VALVE, SAE -16	A104965	0.5 kg	16
4	A79867-3	BALL VALVE, 1/2" NPT	A79867	1.4 kg	17
1	2006030	SUCTION FLANGE	2006030	9.6 kg	18
1	2006020	6" SUCTION FLANGE ASSEMBLY	2006020	33.1 kg	20
1	2001965	SUCTION HEADER, HYDRAULIC	2001965	11.6 kg	21
2	2000292	BLANKING FLANGE, CODE 61, 2.5"	2000292	5.5 kg	22
8	A22157-4	WASHER, SM OD M12	A22157	0.0 kg	23
8	A22153-40508	SHCS, M12x50mm C10.9	A22153	0.5 kg	24
4	A82384-5	WASHER, LOCK M16	A82384	0.0 kg	25
4	A22154-55	NUT, M16 G8	A22154	0.1 kg	26
4	A22158-5	WASHER, HD NW OD M16	A22158	0.1 kg	27
8	633-006	WASHER, PLAIN 1/2"		0.1 kg	28
8	608-108	HHCS, 1/2"-13 UNCx2-3/4" G8		0.8 kg	29
8	635-012	WASHER, LOCK 1/2"		0.0 kg	30
16	A22158-6	WASHER, HD NW OD M20	A22158	0.4 kg	31
8	612-442	SHCS, 1/2"-13 UNCx2" G8		0.6 kg	32
8	A22151-61005	HHCS, M20x100mm C8.8	A22151	2.6 kg	33
1	A104402-2	BUTTERFLY VALVE, 2.5"	A104402	3.6 kg	34
8	A22151-61405	HHCS, M20x140mm C8.8	A22151	3.4 kg	35
1	A104402-9	BUTTERFLY VALVE	A104402	11.1 kg	36
4	A22151-51105	HHCS, M16x110mm C8.8	A22151	0.8 kg	37
16	A82384-6	WASHER, LOCK M20	A82384	0.3 kg	38
16	A22154-65	NUT, M20 C8	A22154	1.1 kg	39
1	2006023	6" SUCTION FLANGE ASSEMBLY	2006023	24.2 kg	40
1	661-122	GSKT, RNG FLG Ø6"x1/16" C150		0.0 kg	41
1	2003901	M18x1.5 ADAPTER	2003901	0.1 kg	42
1	650-104	REDUCING BUSHING 1/2 X 1/4		0.0 kg	44
2	2006784	LEVEL SENSOR, ULTRASONIC	2006784	0.3 kg	45
1	653-936	PLUG, PIPE HEX SOC 1"		0.1 kg	46
1	653-939	PLUG, PIPE HEX SOC 2"		0.4 kg	47
3	653-934	PLUG, PIPE HEX SOC 1/2"		0.1 kg	48

NOTES:

1. KEEP ALL PORTS PLUGGED UNTIL FINAL ASSEMBLY.
2. TORQUE ALL FASTERNERS TO ROBBINS SPEC. DRAWING 5750990017.
3. VERIFY ALL SUCTION PORTS ARE OPEN BEFORE ELECTRIC MOTOR ROTATION.
4. PLUMB PER MACHINE HYDRAULIC SCHEMATIC.
5. PAINT SPECIFICATIONS: SHERWIN WILLIAMS KEM AQUA GREY PRIMER E61WXA.
   PAINT: SHERWIN WILLIAMS KEM AQUA WHITE ENAMEL F75WC501.
6. TANK VOLUME: 2974 liters (785.9 gallons).

PROPRIETARY NOTICE
This information disclosed herein, is the sole property of The Robbins Company and is considered confidential. It shall not be duplicated in full or part, used by or disclosed to any Company. By accepting this information, recipient agrees to maintain it in confidence and not reproduce or use it for whatsoever in the conditions. This material is on loan only, and upon request is to be returned to The Robbins Company.

MACHINE	NEXT ASSY
EPB2016-376	1047541

UNLESS NOTED ALL DIMS ARE mm
TOLERANCES UNLESS NOTED

0-300	±1.5	X	±1.5
300-1500	±3	X.X	±1.0
1500-6000	±6	X.XX	±.40
6000+	±12	X.XXX	±.100
		ANGLES	±1°

DIRECT ANGLE PROJECTION
SURFACE FINISH √

DIMENSIONS (X) ARE REF.
ALL GEOMETRIC DIMENSIONING & TOLERANCING PER ANSI Y14.5-2009

REV | DESCRIPTION | REV'D BY/ DATE | APP'D BY/ DATE

TITLE: HYDRAULIC RESERVOIR

SIZE D | DWG No. 2006772 | REV 0 | SHT 1 OF 2 | SCALE SEE DETAIL

WEIGHT TOTAL 1323.0 kg

DRAWN BY D.BUCKINGHAM DATE 2/9/2012
CHECKED STANDARDS D.DONLEY
CHECKED DESIGN D.DONLEY
APPROVED BY J.HEINEMAN DATE 2/9/2012

Robbins
www.TheRobbinsCompany.com

2006772

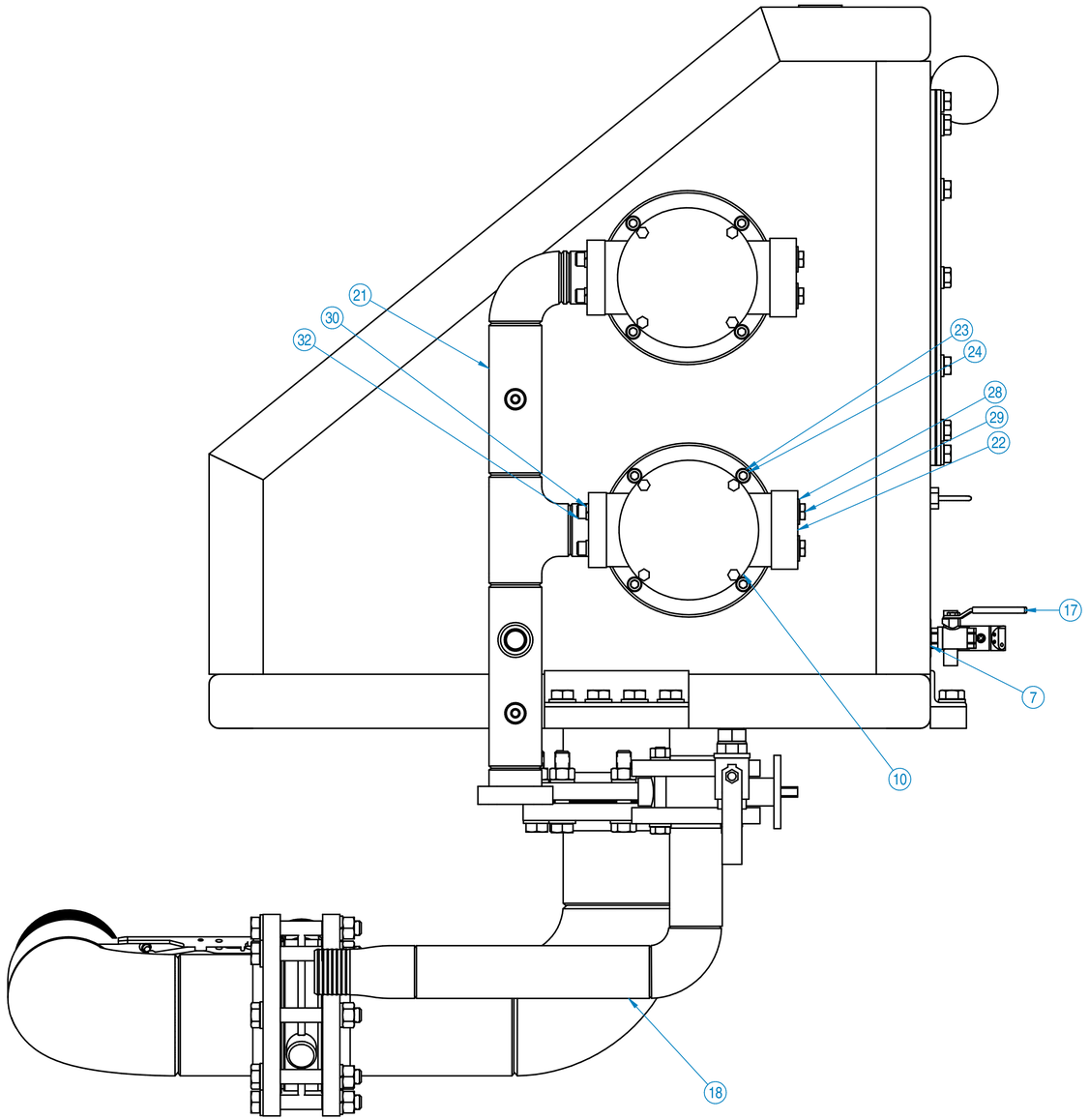

VIEW B-B
1:4

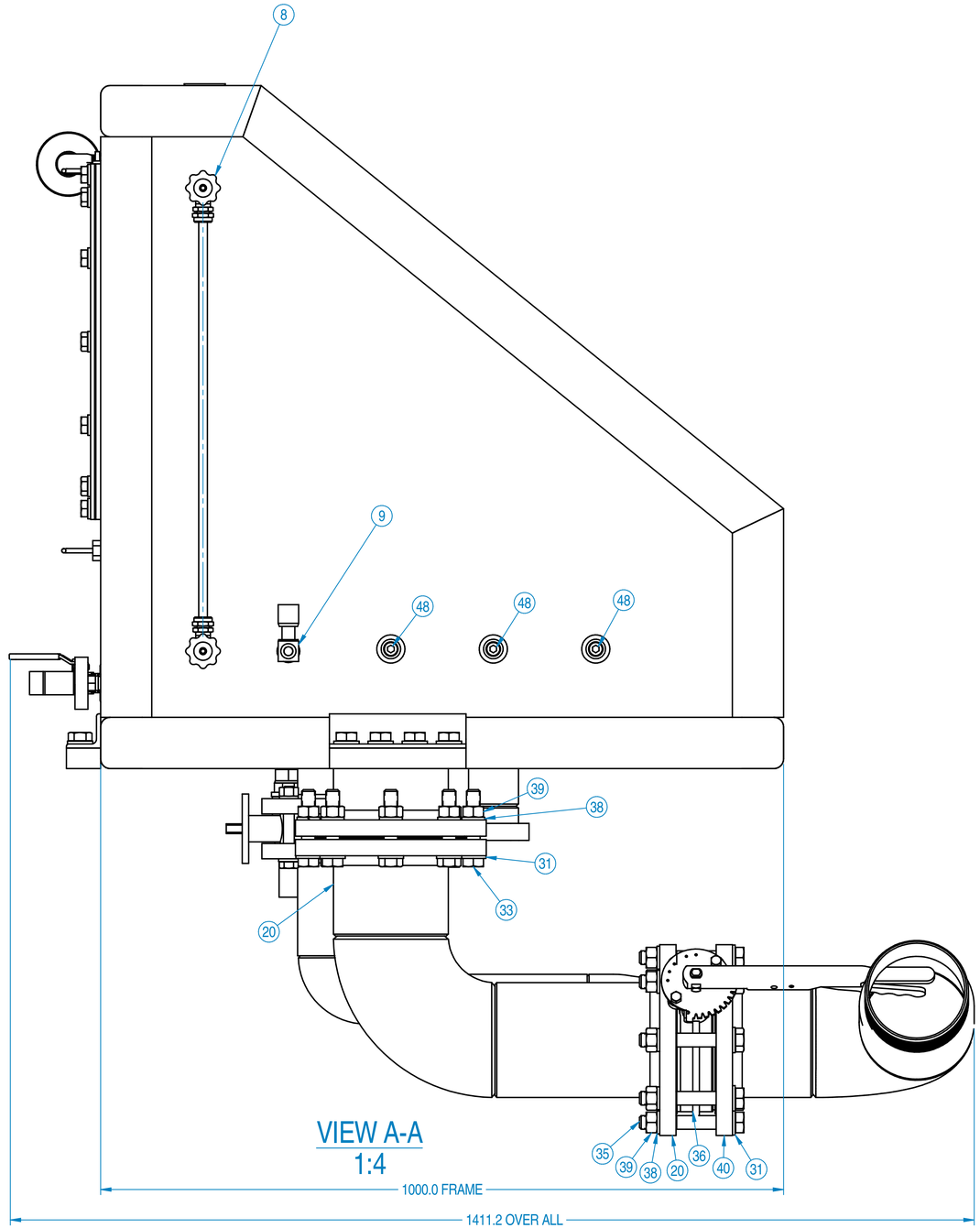

VIEW A-A
1:4

PROPRIETARY NOTICE
The information disclosed herein, at the sole property of The Robbins Company and is not to be published or shall not be duplicated in full or part, used by or disclosed to any person, firm or corporation for any purpose except to The Company. By accepting this information, recipient agrees to the foregoing restrictions and to return this information upon request to the conditions. This material is on loan only, and shall be returned upon request.

MACHINE	NEXT ASSY
EPB2016-376	1047541

UNLESS NOTED ALL DIMS ARE mm
TOLERANCES UNLESS NOTED

0-300	±.5	X	±1.0
300-1500	±3	X.X	±.10
1500-6000	±6	X.XX	±.40
6000+	±12	X.XXX	±.100
		ANGLES	±1°
THIRD ANGLE PROJECTION		SURFACE FINISH	√

DIMENSIONS IX ARE REF.
ALL GEOMETRIC DIMENSIONING & TOLERANCING PER ANSI Y14.5-2009

REV	DESCRIPTION	REVD BY DATE	APPD BY DATE

TITLE: HYDRAULIC RESERVOIR

SIZE	TWG No.	REV	SHT	OF	SCALE
D	2006772	0	2	2	SEE DETAIL

DO NOT SCALE

DRAWN BY	CHECKED STANDARDS
D.BUCKINGHAM	D.DONLEY
DATE	CHECKED DESIGN
2/9/2012	D.DONLEY
WEIGHT TOTAL	APPROVED BY
1323.0 kg	J.HEINEMAN
	DATE 2/9/2012

Robbins
www.TheRobbinsCompany.com

2006772

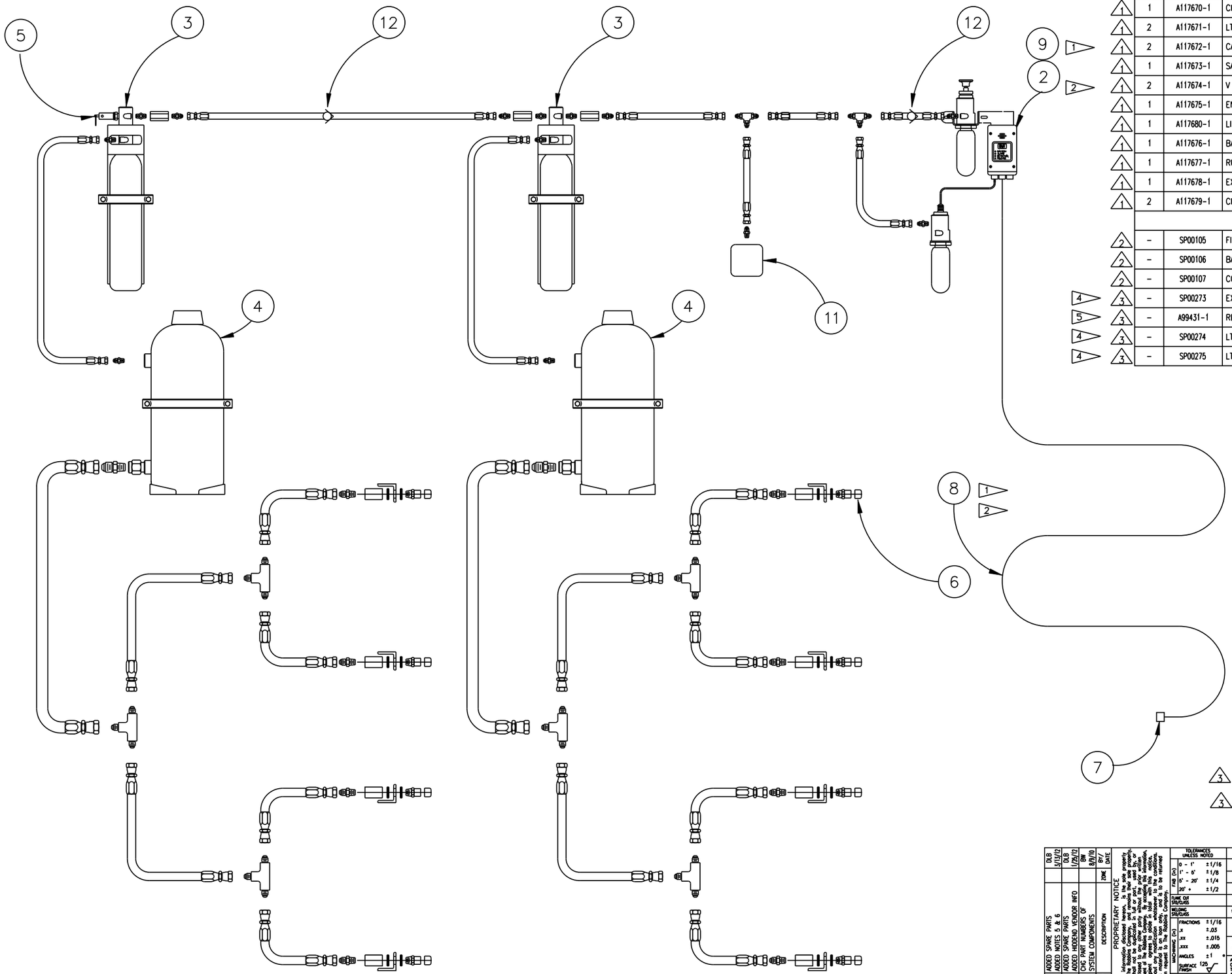

	QTY. -1	PART No.	ZONE	DESCRIPTION	WT. EA. lbs.	MATERIAL	ITEM
	–	D101749-1		FIRE PROTECTION SYSTEM		ANSUL	1
1	1	A117670-1		CHECKFIRE MP SYSTEM			2
1	2	A117671-1		LT-1-101-30 TANK, BRACKET & AGENT			3
1	2	A117672-1		CARTRIDGE, BRACKET & ACTUATOR			4
1	1	A117673-1		SAFETY VENT VALVE			5
1	2	A117674-1		V 1/2 NOZZLE (PKG OF 4)			6
1	1	A117675-1		END-OF-LINE RESISTOR			7
1	1	A117680-1		LINEAR DETECTION WIRE 100'			8
1	1	A117676-1		BATTERY ASSEMBLY			9
1	1	A117677-1		RUBBER SLEEVE (PKG OF 20)			10
1	1	A117678-1		EXPLOSION PROOF PRESSURE SWITCH			11
1	2	A117679-1		CHECK VALVE			12
				SPARE PARTS			
2	–	SP00105		FIRE SUPPRESSION CARTRIDGE			–
2	–	SP00106		BATTERY EXTENDER CABLE			–
2	–	SP00107		COVER REMOVAL TOOL			–
4 3	–	SP00273		EXTENDER CABLE			–
5 3	–	A99431-1		RELEASE CIRCUIT TEST MODULE			–
4 3	–	SP00274		LT-10 CARTRIDGE			–
4 3	–	SP00275		LT-10 ACTUATOR UNIT			–

1 DETECTION WIRE IS MOUNTED ON INSIDE EDGE OF POWER UNIT FRAME TUBE.

2 Pc 08 NOT SHOWN, USED AS A COLLAR ON DETECTION WIRE WHEN FASTENING WIRE TO TUBE.

3. SYSTEM TO BE CE AND CSA CERTIFIED FOR USE IN EUROPE OR CANADA BY ANSUL CERTIFIED REPRESENTATIVE.

3 4 DWG NUMBER A101748

3 5 DWG NUMBER A99431

REV	DESCRIPTION	ZONE	BY/DATE
3	ADDED SPARE PARTS ADDED NOTES 5 & 6		DLB 3/13/12
2	ADDED SPARE PARTS ADDED HIDDEN VENDOR INFO		DLB 1/26/12
1	CHG PART NUMBERS OF SYSTEM COMPONENTS		BW 8/9/10

PROPRIETARY NOTICE
The information disclosed hereon, is the sole property of The Robbins Company, and remains their sole property. It shall not be duplicated in full or part, used by, or disclosed to any other party without the prior written consent of The Robbins Company. By accepting this information, recipient agrees to abide in total with this notice, without any modification whatsoever to the conditions. This material is on loan only, and is to be returned upon request to The Robbins Company.

TOLERANCES UNLESS NOTED
FAB (in): 0 - 1" ±1/16; 1" - 5" ±1/8; 5" - 20" ±1/4; 20" + ±1/2
FLUME CUT SIG/CLASS
WELDING SIG/CLASS
MACHINING (in): FRACTIONS ±1/16; .X ±.03; .XX ±.015; .XXX ±.005; ANGLES ±1°; SURFACE FINISH 125
MACHINE SIG/CLASS

MACHINE: MB471-316
NEXT ASSY
W/O#
DO NOT SCALE
THIRD ANGLE PROJECTION
ALL GEOMETRIC DIMENSIONING AND TOLERANCING PER ANSI Y14.5M-1982
DIMS (X) ARE REF
SCALE: N/A

TITLE: FIRE SUPPRESSION SYSTEM DUAL TANK

SIZE: D | DWG No: D101749 | REV: 3 | SHT 1 OF 1 | ORIGIN: ☐ Solon ☒ Kent ☐ Oak Hill

DRAWN: K. DILLON DATE: 04/04/06 | CHECKED: R. JOHNSON DATE: .

Robbins
THE ROBBINS COMPANY
29100 Hall Street
Solon, Ohio 44139 USA
Phone (440) 248-3303
Fax: (440) 248-1702
Kent, WA: Phone (253) 872-0500 Fax: (253) 872-0199
Oak Hill, WV: Phone (304) 465-5880 Fax: (304) 465-5886

D101749

CHECKFIRE® MP-N ELECTRIC DETECTION AND ACTUATION SYSTEM

Data/Specifications

FEATURES

- MSHA Approved for Permissible Applications in an Explosive Methane/Air Atmosphere
- Gas Motor Actuation
- Manual and Automatic Actuation
- 3 Detection Options – Linear, Spot and Pneumatic/Linear
- Self Contained – Internal 3.6 VDC Power Source
- Power Fault Monitoring for Internal Power
- Euro-Style Terminal Block for Field Connections
- Two Part Enclosure Design Simplifies Installation and Servicing
- Tamper-Proof Screws on Front Cover
- Environmentally Sealed Enclosure
- Mounting Feet For Mounting To Any Suitable Flat Surface
- Microprocessor Based Circuitry
- Sealed, Membrane Push Button For Reset and Delay
- Vibration and Shock Resistant Design
- Electronic Circuitry That Meets The IEC Standards For Electromagnetic Compatibility in Heavy Industrial Environments
- Form “C” Relay Output Connection For Shutdown Functions
- Two Supervised Initiating Circuits – One For Detection and One for Either Manual Electric Actuation or Pressure Switch Feedback
- One Supervised Release Circuit
- Manually Field Programmable Circuits (can optionally be PC programmed)
- History File to Record The Last 50 Alarm and Trouble Events
- Built-in Diagnostic Function Identifies The Source Of Trouble
- Programmable Time Delays (Alarm to Shutdown, Shutdown to Release)

APPLICATION

The CHECKFIRE® MP-N Electric Detection and Actuation System furnishes fire detection for equipment hazard areas. Its unique actuator allows actuation of a pneumatically-actuated fire suppression system either manually or automatically.

The CHECKFIRE MP-N system is typically used with an ANSUL® A-101 Vehicle Fire Suppression system for 24-hour protection of equipment. The system is particularly suited for protection of equipment that is subjected to extreme environmental and physical conditions. The system design complies with the “Safety Standards For Underground Coal Mine Ventilation – MSHA Title 30: Part 75.”

The control module can be utilized as a self contained system, powered by its own internal Lithium battery. This allows the detection system to operate around-the-clock without use of external power.

The control module may be installed where the ambient temperature is between –40 °F to 140 °F (–40 °C to 60 °C).

DESCRIPTION

The complete CHECKFIRE MP-N system is composed of components which are combined to provide automatic fire detection and actuation. The electric detection and actuation system is designed for use with the ANSUL fire suppression systems that use pneumatic actuation as a means of system actuation.

004879

The first of two initiating circuit is the supervised detection circuit designed to be connected to linear (wire) and/or spot type thermal detectors that provide a contact closure input to initiate a fire detected condition. The second initiating circuit is designed to accept a contact closure type of actuating device such as a manual electric pull station input or a pressure switch to initiate the module when the system is actuated with the pneumatic/manual actuator. The initiating circuits are low impedance and designed to eliminate nuisance alarms associated with contact bounce.

First Initiating Circuit

Two field programmable time delays provide timing of shutdown and release functions associated with the operation of the detection and electric manual pull/pressure switch input initiating circuits. The first time delay is field programmed to assign the time between the initial alarm condition from the detection circuit and the operation of the shutdown relay. The first time delay is programmable for 5, 10, 20, or 30 seconds. The second time delay is field programmed to assign the time between the completion of the first time delay (when the shutdown relay operates) and operation of the release circuit. The second time delay is field programmable for 0, 10, 20, or 30 seconds.

Second Initiating Circuit

The second initiating circuit is field programmable to be used as an electric manual pull or as a pressure switch feedback circuit. If selected as an electric manual actuation input circuit, its operation will override the first time delay function and initiate a second time delay condition, causing the shutdown relay to immediately operate and the release to occur upon expiration of the second delay. Additionally, the control module can be field programmed, if it is so desired, to shorten the second time delay when a manual actuation occurs. The time delay options associated with the manual actuation are 0, 10, 20, and 30 seconds, with the condition that it can only be less than or equal to the time delay associated with the detection circuit.

Selection of the second initiating circuit as a pressure switch feedback circuit will result in the operation of the shutdown relay, but will not operate the release circuit. Additionally, a trouble condition will occur on the control module, indicating the need for service.

The front panel contains a “DELAY” and “RESET” button. Operation of the DELAY button will repeat the first time delay if initiated while time delay one is active. Once time delay two has started, operation of the DELAY switch has no affect.

The RESET button is used to re-initialize the control panel when depressed; it provides an indication that all LEDs and the sounder are functional. It is also used to upload the manual programming into the control module.

The front panel also contains LEDs for visual annunciation of alarm, trouble, release, and power conditions.

EMI filtering is provided on all inputs, outputs, and power circuitry.

CONSTRUCTION

The enclosure consists of a cover assembly and back box which is constructed of Noryl SE1GFN3 with a flammability rating of UL94 V-1. The back box contains the field interface terminal block, battery, and field wiring entrance ports. The cover assembly contains the control PC board assembly, sounder, operator interface panel, and environmental seal. The enclosure meets IEC 529 requirements for dust and water spray in all directions. Mounting feet allow mounting to any suitable flat surface. Steel mounting brackets are also available.

All circuitry, relays, switches, and LEDs are contained on a single PC board. A board mounted receptacle mates with the plug-in terminal block mounted in the back box. A high pitch sounder is threaded into the cover and plugged into the PC board. The PC board is encapsulated to provide added protection against moisture and dust. An RS232 connector is provided for field programming from a PC and for data retrieval from a trouble and alarm event history file. The PC board assembly contains a DIP switch for optional manual programming functions without the use of a PC.

INTERNAL CONNECTIONS

The internal battery is connected to the PC board via a single plug.

The field connection terminal strip located in the back box is a 16 position terminal block containing the following terminations:

Position	Circuit Description
1	Not Used
2	Not Used
3	+ Detection Input
4	– Detection Input
5	Initiating Input Circuit No. 2 (+)
6	Initiating Input Circuit No. 2 (–)
7	+ Release Output
8	– Release Output
9	Not Used
10	Not Used
11	Not Used
12	Not Used
13	Not Used
14	Shutdown N.O.
15	Shutdown Common
16	Shutdown N.C.

OPERATIONAL ENVIRONMENTAL SPECIFICATIONS

- Operating Temperature Rating: –40 °F to 140 °F (–40 °C to 60 °F)
- Humidity: 24 Hours at 85% +/– 5% at 86 °F (30 °C)
- Shock: In accordance with UL1254
- Vibration: In accordance with UL1254
- Electromagnetic Compatibility: Meets EN 55011 and EN 50082-2 for heavy industrial environments
- Moisture and Dust: Meets IEC 529 for direct water spray

SEQUENCE OF OPERATION

Upon receiving an input signal from either a shorted detection wire or a closed thermal detector, the following functions will be performed automatically:

1. The Alarm LED will flash, the internal sounder will pulse at a rate of two times per second. The shutdown time delay begins. (The operator can repeat the shutdown time delay if the DELAY button is pressed before the shutdown time delay has expired).
2. After the shutdown time delay has expired, the Alarm LED pulse rate and the sounder pulse rate will change to four times per second. The shutdown relay will transfer resulting in equipment shutdown (when provided), and the discharge time delay begins (when set).
3. After the discharge time delay has expired, the control module release circuit operates, resulting in the fire suppression system actuation.

   After system discharge, the Alarm LED and sounder will continue to pulse at a rate of 4 times per second for 30 seconds. After that, it will switch to the trouble mode and pulse once every 10 seconds.

If manual actuation is performed through operation of the manual input circuit, the first time delay will be by-passed and either immediate release will occur or the second time delay will begin.

If manual actuation is performed by operating the mechanical actuator, the fire suppression system will immediately discharge. The shutdown function will take place through the pressure switch circuit (if provided).

APPROVALS

- MSHA – 2G-4107-0

ORDERING INFORMATION

Part No.	Shipping Assembly
427312	CHECKFIRE MP-N Electric Detection and Actuation System Includes: Control Module, Manual/Automatic Actuator, Mounting Bracket, Gas Motor Actuator, LT-10-R Cartridge, 1/4 in. Check Valve, Label Package, and Owners Manual (Battery must be ordered separately)
71230	Linear Detection Wire, 356 °F (180 °C), 100 ft. (30.5 m)
71231	Linear detection Wire, 356 °F (180 °C), 500 ft. (152.4 m)
▸ 426520	End of Line Resistor Assembly
416218	Spot Detector – 270 °F (132 °C)
416219	Spot Detector – 325 °F (163 °C)
416220	Spot Detector – 360 °F (182 °C)
416213	Spot Detector Package (one required per detector)
416214	Spot Detector Cable Clamp Package (for use with protective tubing) – one required for each detector
416762	Spot Detector Cable Clamp Package (for use without protective tubing) – one required for each detector
416215	Flex Protective Tubing – 100 ft. (30.5 m)
416221	Spot Detector Bracket – one required for each detector
416784	AMP Crimp Tool (required for spot detector assembly)
416113	Pneumatic/Linear Detector, 35 ft. (10.7 m) (Model 808-DRV)
416216	Cable Assembly, 15 ft. (4.6 m) (for pneumatic/linear detector)
416378	Mounting Clips Package for Pneumatic/Linear Detector Sensing Element (includes 100 clips)
417055	Wire, 200 °C, 18 AWG-2 w/Shield and Drain Wire 500 ft. (152 m)
56691	Nylon Cable Ties (Pkg. of 20)
56692	Rubber Sleeves (Pkg. of 20)
71820	Splicing Device (for linear detection wire)
427308	Battery Shipping Assembly (3.6 VDC)
423541	Release Circuit Test Module
427310	Operation and Maintenance Manual
428042	Battery Extender Cable Assembly
426601	Extender Cable Assembly
423524	RS232 PC Interface Cable Kit
▸ 426461	End-of-Line Resistor Assembly (10 of Part No. 426520)
428966	Cover Removal Tool
423423	LT-10-R Cartridge

ANSUL and CHECKFIRE are trademarks of Ansul Incorporated or its affiliates.

ANSUL | tyco Fire & Security
Ansul Incorporated
Marinette, WI 54143-2542
715-735-7411
www.ansul.com

Copyright ©2006 Ansul Incorporated
Form No. F-2001001-2

MODEL EPB2016-376/377
SECTION 15 • Electrical System Assembly

1. Electrical schematic
2. Transformer specification drawing
3. VFD assembly specification drawing
4. Main electrical cabinet drawing
5. PLC installation
6. Cabling diagram
7. Communication system
8. Gas detection system
9. Fire alarm system
10. TV system
11. Air purge system

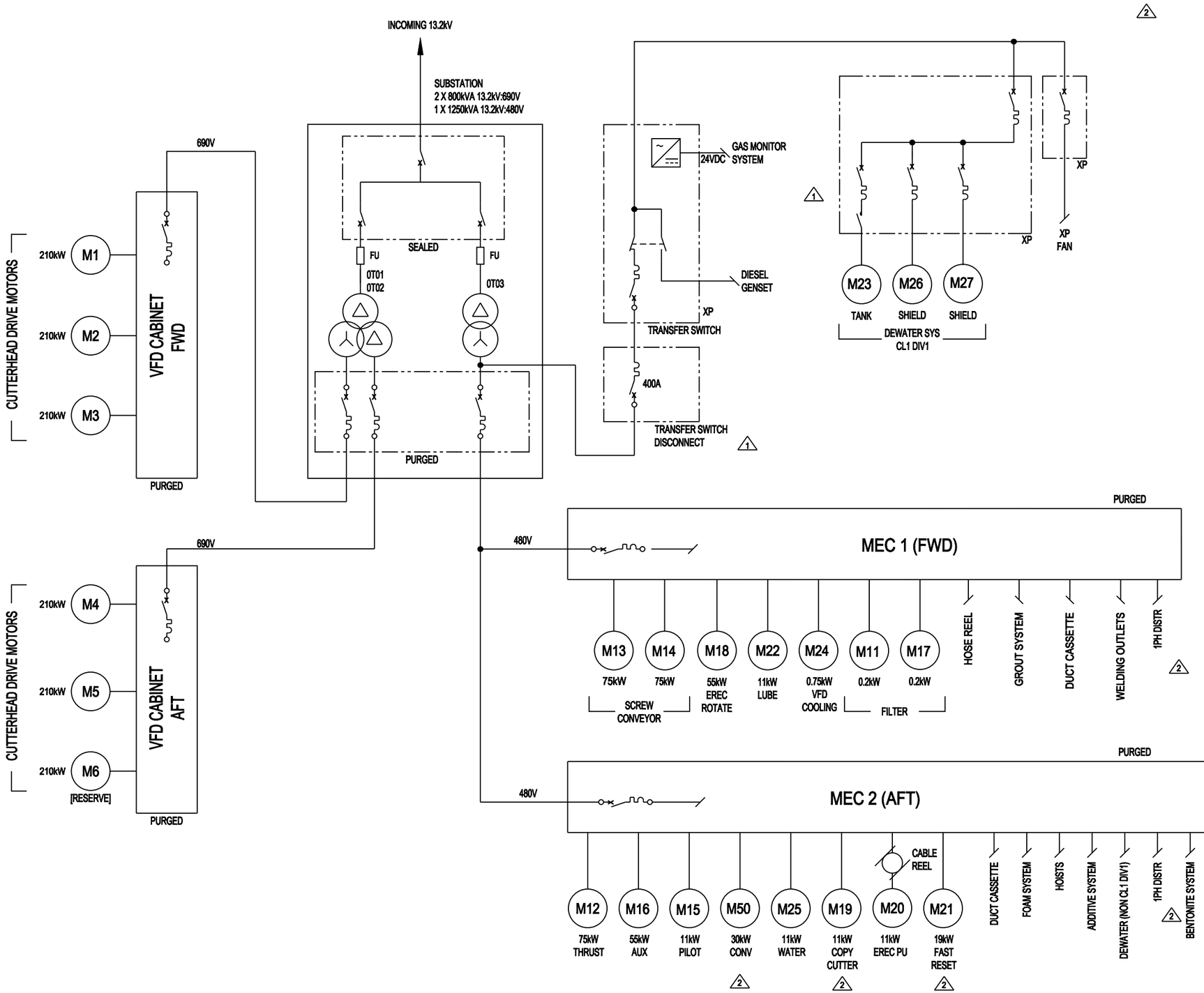

SHT	REV
51	1
50	1
49	1
48	1
47	2
46	2
45	1
44	2
43	2
42	2
41	2
40	1
39	1
38	2
37	1
36	1
35	1
34	1
33	1
32	1
31	1
30	1
29	1
28	1
27	1
26	1
25	1
24	1
23	1
22	1
21	1
20	1
19	1
18	1
17	2
16	2
15	1
14	1
13	1
12	2
11	1
9	1
8	1
7	2
6	2
5	2
4	2
3	2
2	2
1	2

ONE-LINE

REV	DESCRIPTION	REVD BY / DATE	APPD BY / DATE
2	REMOVED PURGED JBOX FOR ESSENTIAL SERVICES, M19, BENTONITE AND PLC LIGHTS. CHG'D 226, ADDED M19, M21 AND 1PH DIST TO MEC1 & 2. UPDATED REV STATUS REVISED SHTS 2-7, 12, 16, 17, 38, 41, 42, 43, 44, 46, 47, 50, 51	DBS 27SEP12	D.HOBBS 27SEP12
1	UPDATED REV STAUS, MOVED M23,26,27 TO ESSENTIAL SERVICES, ADDED TRANS SW DISC, REVISED SHEETS 1 - 49, ADDED SHEETS 50 & 51	DBS 9JUL12	D.HOBBS 10JUL12

MACHINE	NEXT ASSY
EPB2016-376	1046550
EPB2016-377	1046550

UNLESS NOTED ALL DIMS ARE inch

TOLERANCES UNLESS NOTED

0 - 1"	± 1/16
1" - 2"	± 1/8
2" - 10"	± 1/4
10" +	± 1/2

FRACTIONS ± .03
X ± .015
.XX ± .005
ANGLES ± 1°
SURFACE 125

DIMENSIONS (X) ARE REFERENCE

ALL GEOMETRIC DIMENSIONING & TOLERANCING PER ANSI Y14.5-2009

PROPRIETARY NOTICE
The information disclosed hereon, in the sole property of Robbins and is furnished in confidence and may not be duplicated in full or part, used by or disclosed to any person for any purpose without the written permission of Robbins. By accepting this information, the recipient agrees to use the information in confidence, to duplicate and disclose to others only as authorized in writing by Robbins. This notice is not to be removed. The recipient shall be liable for any damages resulting from violation of this notice.

TITLE
ELECTRICAL SCHEMATIC SAN FRANCISCO

SIZE D | DWG No. 1046646 | REV 2 | SHT 1 of 51 | SCALE 1"0"=1'0" | DO NOT SCALE

DRAWN BY P.BRENNAN DATE 3/6/2012
CHECKED DESIGNER P.BRENNAN
CHECKED DESIGN 3/6/2012
WEIGHT/UOM
APPROVED BY D.HOBBS DATE 3/6/2012

Robbins

www.TheRobbinsCompany.com

1046646

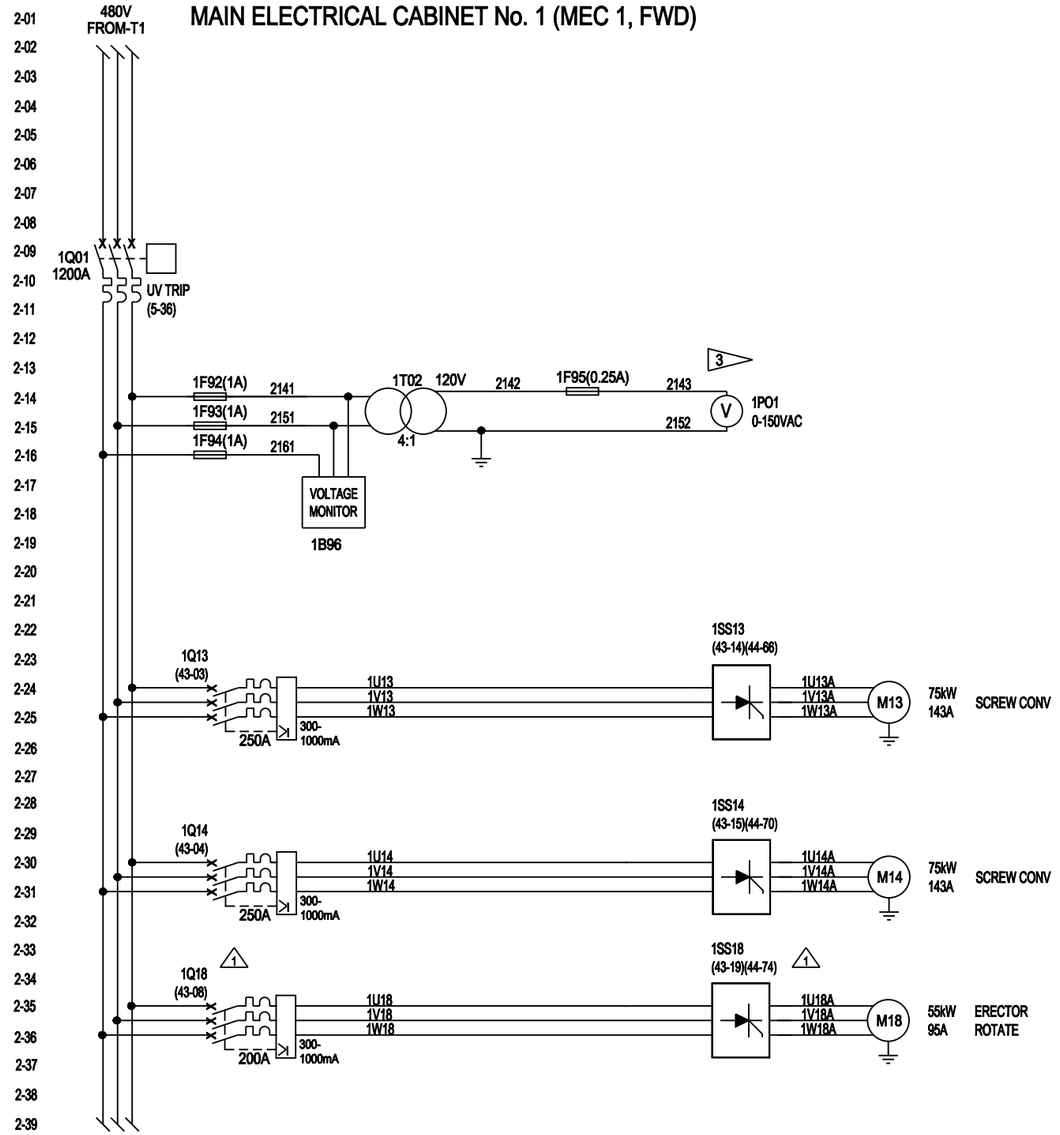

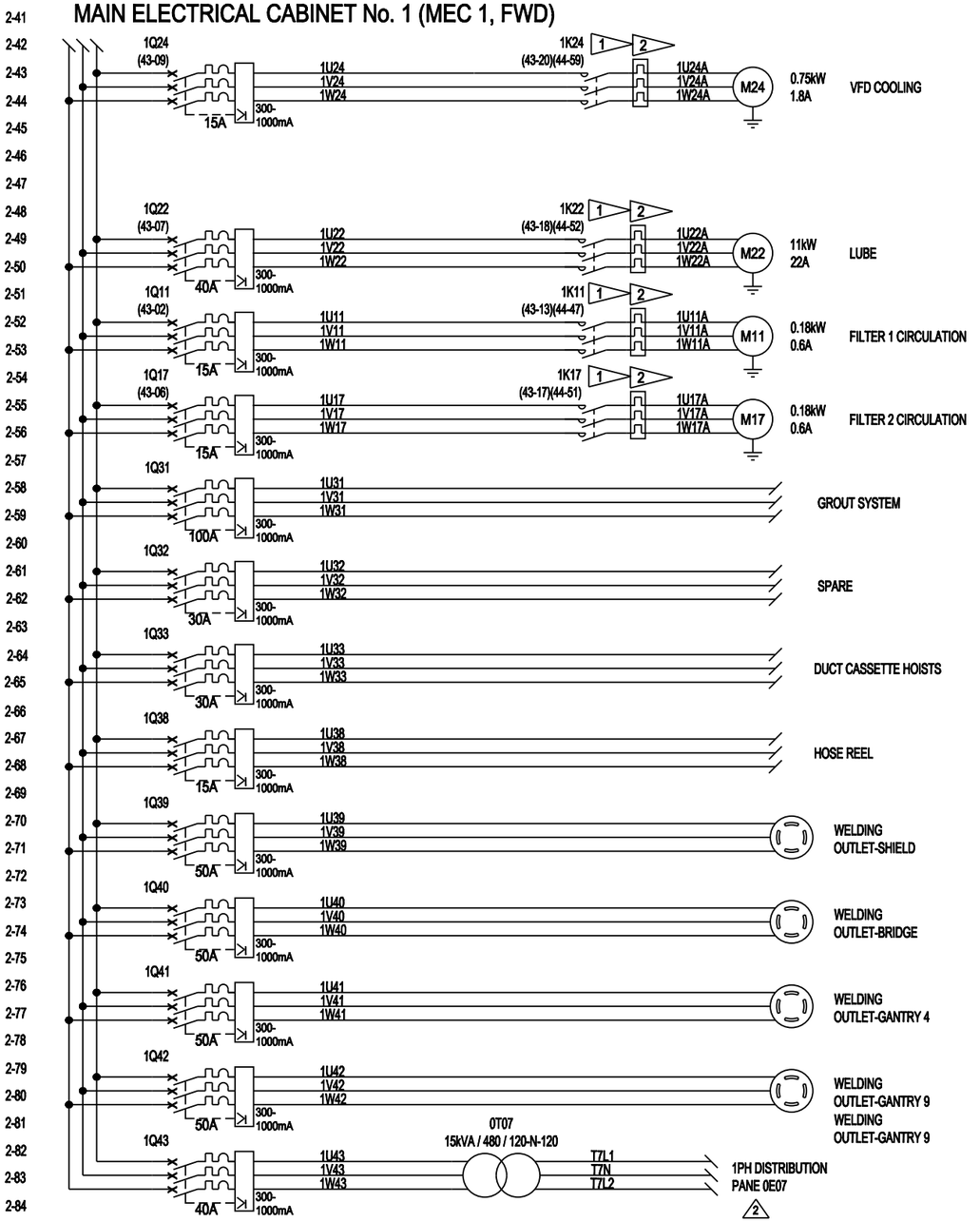

COMPONENT ITEM CODE CROSS REF.

ITEM CODE	COMPONENT
A	AMPLIFIER
B	TRANSDUCER
C	CAPACITOR
E	HEATER, LAMP, MISC ASSY
F	FUSE
G	POWER SUPPLY
H	PILOT LIGHT, WARNING LABEL
K	RELAY, CONTACTOR
L	CHOKE
M	MOTOR
N	PLC COMPONENT
P	METER, DISPLAY
Q	CIRCUIT BREAKER
R	RESISTOR
S	SWITCH
T	TRANSFORMER
U	INVERTER
W	CABLE
X	ENCLOSURE, CONNECTOR

COMPONENT LOCATIONS

ITEM CODE	LOCATION
0XXX	ELECTRICAL SYSTEM ASSY
1XXX	MEC 1
2XXX	MEC 2
3XXX	HYDRAULIC POWER UNIT
4XXX	FOAM SYSTEM
5XXX	LEFT TBM
6XXX	RIGHT TBM
7XXX	OPERATOR CABIN
8XXX	ERECTOR
9XXX	ADDITIVE SYSTEM
10XXX	GROUT SYSTEM
11XXX	BENTONITE SYSTEM
12XXX	ESSENTIAL SERVICES

NOTES:

1. SET THERMAL OVERLOAD TO MANUAL RESET MODE.
2. SET TRIP POINT TO MOTOR FULL LOAD CURRENT.
3. ITEM LOCATED ON FRONT OF MAIN ELECTRICAL CABINET.

REV	DESCRIPTION	REVD BY / DATE	APPD BY / DATE
2	ADDED 0E07 1PH DISTRIBUTION	DBS 27SEP12	D.HOBBS 27SEP12
1	CHANGED SHEET NUMBER, ADDED REF NUMBERS TO 1Q18 AND 1SS18	DBS 9JUL12	D.HOBBS 10JUL12

MACHINE	NEXT ASSY
EPB2016-376	1046350
EPB2016-377	1046350

UNLESS NOTED ALL DIMS ARE inch
TOLERANCES UNLESS NOTED
1'-0" ± 1/16 | 1'-1" ± 1/8 | 1'-2" ± 1/4 | 2'+ ± 1/2
FRACTIONS ± .03 | X ± .1 | XX ± .015 | XXX ± .005 | ANGLES ± 1° | SURFACE 125
DIMENSIONS [X] ARE REFERENCE
ALL GEOMETRIC DIMENSIONING & TOLERANCING PER ANSI Y14.5-2009

TITLE: ELECTRICAL SCHEMATIC SAN FRANCISCO
SIZE: D | DWG No.: 1046646 | REV: 2 | SHT: 2 of 51 | SCALE: 1"0"=1'0" DO NOT SCALE
DRAWN BY: P.BRENNAN | DATE: 3/6/2012
CHECKED BY/ENGINEER: P.BRENNAN | CHECKED ENGINEER | DATE: 3/6/2012
WEIGHT TOTAL:
APPROVED BY: D.HOBBS | DATE: 3/6/2012

Robbins
www.TheRobbinsCompany.com

1046646

MAIN ELECTRICAL CABINET No. 2 (MEC 2, AFT)

480V
FROM-T1

2Q02
1200A
UV TRIP
(5-38)

2F93(1A)
2F94(1A)
3051
3061
2T02 120V
4:1
3052
2F95
(0.25A)
3053
3062
3
2P01
0-150VAC

2Q12
(46-02)
250A
300-
1000mA
2U12
2V12
2W12
2SS12
(46-24)(47-66)
2U12A
2V12A
2W12A
M12
75kW
143A
THRUST

2Q16
(46-04)
200A
300-
1000mA
2U16
2V16
2W16
2SS16
(46-26)(47-70)
2U16A
2V16A
2W16A
M16
55kW
95A
AUX HYD

2Q50
(46-07)
100A
300-
1000mA
2U50
2V50
2W50
2
2SS50
(46-29)(47-78)
2U50A
2V50A
2W50A
M50
30kW
56A
CONVEYOR

2Q20
(46-06)
40A
300-
1000mA
2U20
2V20
2W20
2K20
(46-28)(47-52)
2UX20
2VX20
2WX20
M20
11kW
22A
CABLE
REEL
ERECTOR PU

MAIN ELECTRICAL CABINET No. 2 (MEC 2, AFT)

2Q15
(46-03)
40A
300-
1000mA
2U15
2V15
2W15
2K15
(46-25)(47-48)
2U15A
2V15A
2W15A
M15
11kW
22A
PILOT HYD

2Q25
(46-15)
40A
300-
1000mA
2U25
2V25
2W25
2K25
(46-19)(47-58)
2U25A
2V25A
2W25A
M25
11kW
22A
WATER SYSTEM

2Q21
100A
300-
1000mA
2U21
2V21
2W21
2K21
(46-20)(47-54)
2U21A
2V21A
2W21A
M21
19kW
35A
FAST RESET
2

2Q28
100A
300-
1000mA
2U28
2V28
2W28
BENTONITE
SYSTEM

2Q19
50A
300-
1000mA
2U19
2V19
2W19
2K19
(46-27)(47-50)
2U19A
2V19A
2W19A
M19
11kW
22A
COPY CUTTER
2

2Q42
70A
300-
1000mA
2U42
2V42
2W42
FOAM SYSTEM CABINET

2Q43
70A
300-
1000mA
2U43
2V43
2W43
ADDITIVE SYSTEM

2Q44
15A
300-
1000mA
2U44
2V44
2W44
MATERIAL HOIST 1

2Q45
15A
300-
1000mA
2U45
2V45
2W45
MATERIAL HOIST 2

2Q46
15A
300-
1000mA
2U46
2V46
2W46
MATERIAL HOIST 3

2Q47
30A
300-
1000mA
2U47
2V47
2W47
SUBMERSIBLE
DEWATER PUMP
BACK UP

2Q48
30A
300-
1000mA
2U48
2V48
2W48
SUBMERSIBLE
DEWATER PUMP
BACK UP

1Q49
40A
300-
1000mA
1U49
1V49
1W49
0T08
15kVA / 480 / 120-N-120
T8L1
T8N
T8L2
1PH DISTRIBUTION
PANE 0E08
2

REV	DESCRIPTION	REVD BY / DATE	APP'D BY / DATE
2	ADDED 0E07 1PH DISTRIBUTION, FAST RESET AND COPY CUTTER. CHG'D M26 TO M50	DBS 27SEP12	D.HOBBS 27SEP12
1	CHANGED SHEET NUMBERS	DBS 9JUL12	D.HOBBS 10JUL12

TITLE: ELECTRICAL SCHEMATIC
SAN FRANCISCO

MACHINE	NEXT ASSY
EPB2016-376	1046350
EPB2016-377	1046350

UNLESS NOTED ALL DIMS ARE inch
TOLERANCES UNLESS NOTED
0 - 1" ± 1/16 | FRACTIONS 1/16
1" - 2" ± 1/8 | .X ± .09
2" - 20" ± 1/4 | .XX ± .015
20" + ± 1/2 | .XXX ± .005
ANGLES ± 1°
SURFACE FINISH 125
DIMENSIONS (D) ARE REFERENCE
ALL GEOMETRIC DIMENSIONING & TOLERANCING PER ANSI Y14.5-2009

SIZE: D | DWG No.: 1046646 | REV: 2 | SHT: 3 OF 51 | SCALE: 1"=1'0" | DO NOT SCALE
DRAWN BY: P.BRENNAN | DATE: 3/6/2012
CHECKED BY/ENGR: P.BRENNAN | CHECKED ENGR DATE: 3/6/2012
WEIGHT TOTAL:
APPROVED BY: D.HOBBS | DATE: 3/6/2012

Robbins
www.TheRobbinsCompany.com

1046646

480V
FROM LINE SIDE
0T03 MAIN CIRCUIT BREAKER

480V
FROM GENSET

TRANSFER SWITCH
SEE SEPARATE
SCHEMATIC

XP

TR017 TR020
24VDC
TO GAS MONITORS

480V
TO ESSENTIAL
SERVICES CABINET

480V
POWER
SUPPLY

12K53
PHASE
FAULT
RELAY

ASYMMETRY
PHASE SEQ
PHASE LOSS

1 3 5
8 7 9 11 12

SUBSTATION GAS SHUTDOWN INTERLOCKS

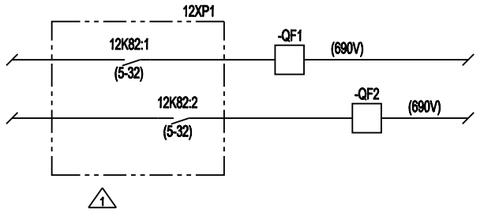

480V
FROM TRANSFER SWITCH

ESSENTIAL SERVICES

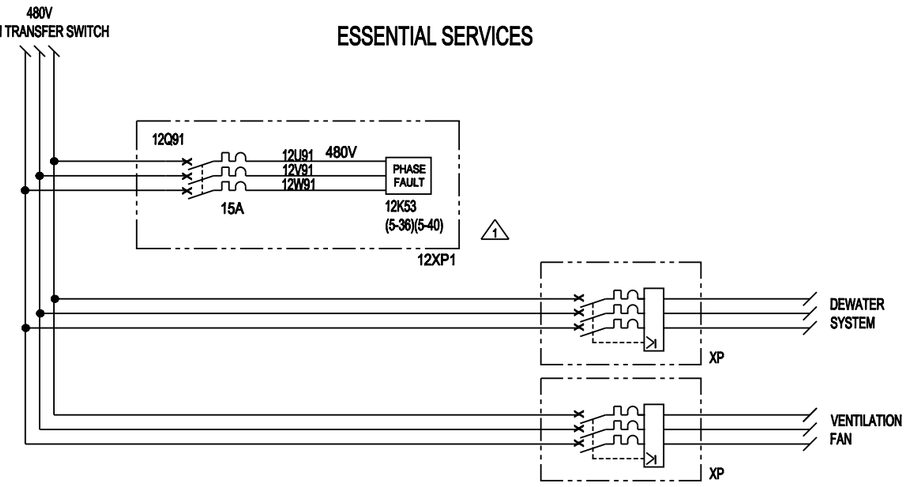

1

REV	DESCRIPTION	REVD BY/ DATE	APPD BY/ DATE
2	DELETED E.S. CABINET, REMOVED AIR COMP, 1PH DIST 0E07, 0E08, AND BENTONITE SYSTEM	DBS 27SEP12	D.HOBBS 27SEP12
1	CHANGED SHT NUMBER AND REF NUMBERS WAS 38, MOVED 12XP1	DBS 9JUL12	D.HOBBS 10JUL12

MACHINE	NEXT ASSY
EPB2016-376	1046350
EPB2016-377	1046350

UNLESS NOTED ALL DIMS ARE inch
TOLERANCES UNLESS NOTED
1'-1" ± 1/16 | FRACTIONS ±1/8
1'-11" ± 1/8 | X ±.03
2'-10" ± 1/4 | XX ±.015
10'+ ± 1/2 | XXX ±.005
ANGLES ± 1°
SURFACE FINISH 125
THIRD-ANGLE PROJECTION
DIMENSIONS [X] ARE REFERENCE
ALL GEOMETRIC DIMENSIONING & TOLERANCING PER ANSI Y14.5-2009

TITLE: ELECTRICAL SCHEMATIC
SAN FRANCISCO

SIZE D | DWG No. 1046646 | REV 2 | SHT 4 of 51 | SCALE 1"0"=1'0" DO NOT SCALE

DRAWN BY P.BRENNAN DATE 3/6/2012
CHECKED BY/ENGINEER P.BRENNAN CHECKED ENGINEER 3/6/2012
WEIGHT TOTAL
APPROVED BY D.HOBBS DATE 3/6/2012

Robbins

www.TheRobbinsCompany.com

1046646

PROPRIETARY NOTICE
The information disclosed hereon, is the sole property of The Robbins Company and is not to be used, copied or disclosed to any party not authorized in writing by The Robbins Company. By accepting this information, recipient agrees to hold it in confidence and to use it only for the purpose authorized by The Robbins Company. This restriction is to be construed to the broadest extent allowed by law.

TR017 24VDC (4-27) — FROM TRANSFER RELAY P/S — TR020 COM (4-27)

METHANE MONITOR, PFR INTERLOCKS

13061 TO PLC (13-06) — 4-20ma — J1 OPEN ALCOM — ALARM 1 ALARM 2 SYS. FAIL — C NC NO C NC NO C NC NO — A B C D — Y Br Blk

OE11
METHANE MONITOR #1
SHIELD

13131 TO PLC (13-13) — 4-20ma — J1 OPEN ALCOM — ALARM 1 ALARM 2 SYS. FAIL — C NC NO C NC NO C NC NO — A B C D — Y Br Blk

OE12
METHANE MONITOR #2
SCREW CONV DISCHARGE

OE11 METHANE MONITOR #1 — ALARM — ALARM 2 SYS FAIL — 5241
OE12 METHANE MONITOR #2 — ALARM — ALARM 2 SYS FAIL — 5242

5221 — OH96 REF — METHANE MONITOR ROTATING LIGHT
OH97 — METHANE MONITOR HORN

5243 — 5244 — 12K81 — METHANE INTERLOCK RELAY 1

12XP1

2 — VFD CABINET 5311 — TRANSFORMER SUBSTATION 5312 — FOAM CABINET 5313 — MAIN ELECTRICAL CABINET 5314 — ADDITIVE CABINET 5315 — 2

MUCK VOLUME MEASUREMENT 5341 — THEODOLITE 5342 — ENZAN STATION 5343 — 12K81:1 (5-24) — 5344 — PHASE FAULT 12K53:1 (4-44)

5361 — 12K82 (4-36) (4-38) (4-40) — METHANE INTERLOCK RELAY 2 (1)
12Q01:UV (4-59) — UV TRIP ESSENTIAL SERVICES CABINET (1)
1Q01:UV (2-09) — UV TRIP MEC 1
2Q02:UV (3-02) — UV TRIP MEC 2

PHASE FAULT 12K53:2 (4-44) — 5381 — 1H92 RD — PHASE FAULT
3

TR017 24VDC (4-27) — FROM TRANSFER RELAY P/S — TR020 COM (4-27)

13201 TO PLC (13-20) — 4-20ma — J1 OPEN ALCOM — ALARM 1 ALARM 2 SYS. FAIL — C NC NO C NC NO C NC NO — A B C D — Y Br Blk

OE14
CARBON MONOXIDE MONITOR SHIELD

13271 TO PLC (13-27) — 4-20ma — J1 OPEN ALCOM — ALARM 1 ALARM 2 SYS. FAIL — C NC NO C NC NO C NC NO — A B C D — Y Br Blk

OE15
CARBON MONOXIDE MONITOR DECK 4

13461 TO PLC (13-46) — 4-20ma — J1 OPEN ALCOM — ALARM 1 ALARM 2 SYS. FAIL — C NC NO C NC NO C NC NO — A B C D — Y Br Blk

OE16
OXYGEN MONITOR SHIELD

13531 TO PLC (13-53) — 4-20ma — J1 OPEN ALCOM — ALARM 1 ALARM 2 SYS. FAIL — C NC NO C NC NO C NC NO — A B C D — Y Br Blk

OE17
OXYGEN MONITOR DECK 4

13601 TO PLC (13-60) — 4-20ma — J1 OPEN ALCOM — ALARM 1 ALARM 2 SYS. FAIL — C NC NO C NC NO C NC NO — A B C D — Y Br Blk

OE18
CARBON DIOXIDE SHIELD

13671 TO PLC (13-67) — 4-20ma — J1 OPEN ALCOM — ALARM 1 ALARM 2 SYS. FAIL — C NC NO C NC NO C NC NO — A B C D — Y Br Blk

OE19
CARBON DIOXIDE DECK 4

14061 TO PLC (14-06) — 4-20ma — J1 OPEN ALCOM — ALARM 1 ALARM 2 SYS. FAIL — C NC NO C NC NO C NC NO — A B C D — Y Br Blk

OE20
HYDROGEN SULFIDE SHIELD

14131 TO PLC (14-13) — 4-20ma — J1 OPEN ALCOM — ALARM 1 ALARM 2 SYS. FAIL — C NC NO C NC NO C NC NO — A B C D — Y Br Blk

OE21
HYDROGEN SULFIDE DECK 4

REV	DESCRIPTION	REVD BY / DATE	APPD BY / DATE
2	REMOVED ESSENTIAL SERVICES CABINET AND ESTOP ADDED LINE NUMBERS TO ESTOPS	DBS 27SEP12	D.HOBBS 27SEP12
1	CHANGED SHEET NUMBER, MOVE 1Q01:UV, UV TRIP, ESC INTO ESSENTIAL SERVICE CAB, ADDED PRESSURE SWITCH AND MOVED 12K82, METHANE INTERLOCK RELAY 2	DBS/PMB 9JUL12	D.HOBBS 10JUL12

MACHINE	NEXT ASSY
EPB2016-376	1046350
EPB2016-377	1046350

TITLE: ELECTRICAL SCHEMATIC SAN FRANCISCO

UNLESS NOTED ALL DIMS ARE inch
TOLERANCES UNLESS NOTED
DIMENSIONS [X] ARE REFERENCE
ALL GEOMETRIC DIMENSIONING & TOLERANCING PER ANSI Y14.5-2009

SIZE D — DWG No. 1046646 — REV 2 — SHT 5 of 51 — SCALE 1"0"=1'0" DO NOT SCALE

DRAWN BY P.BRENNAN DATE 3/6/2012
CHECKED BY/ENGINEER P.BRENNAN CHECKED ON/DATE 3/6/2012
WEIGHT TOTAL
APPROVED BY D.HOBBS DATE 3/6/2012

Robbins

www.TheRobbinsCompany.com

1046646

PROPRIETARY NOTICE
The information disclosed hereon, is the sole property of The Robbins Company and is not to be used, copied or disclosed to any party without the written permission of The Robbins Company. By accepting this information, recipient agrees to indemnify The Robbins Company for any loss or damage caused by its unauthorized use. This material is to be used only, and is to be returned, upon request by The Robbins Company.

1PH LOAD PANEL 0E07

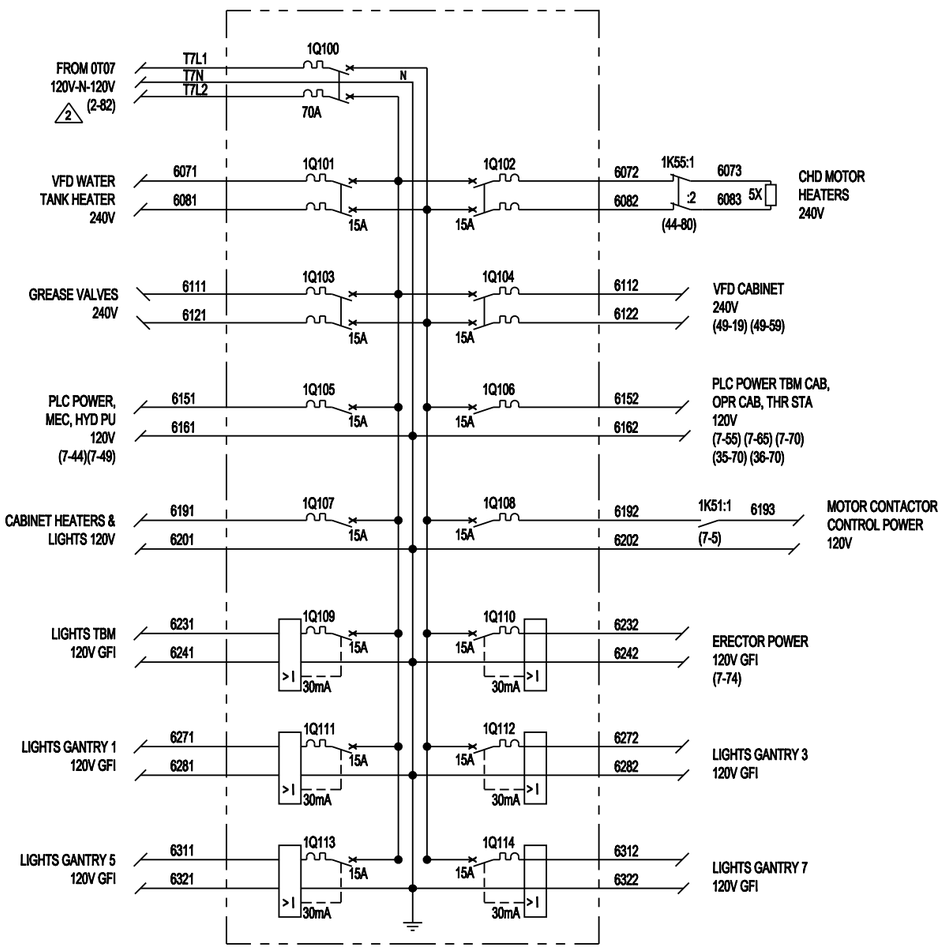

CABINET LIGHTING & HEATERS

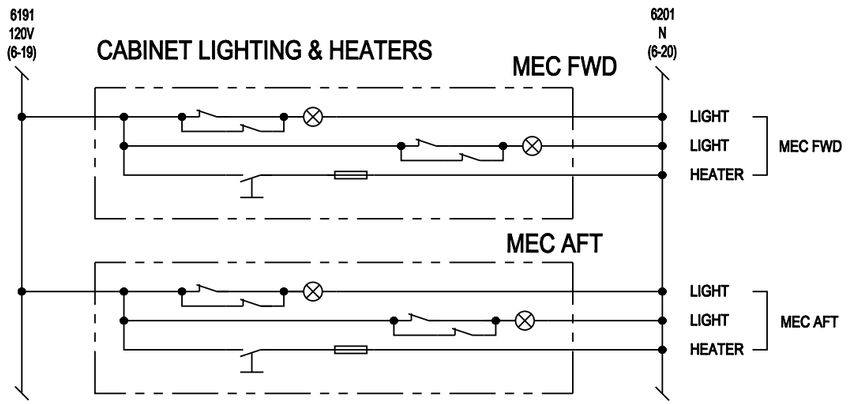

1PH LOAD PANEL 0E08

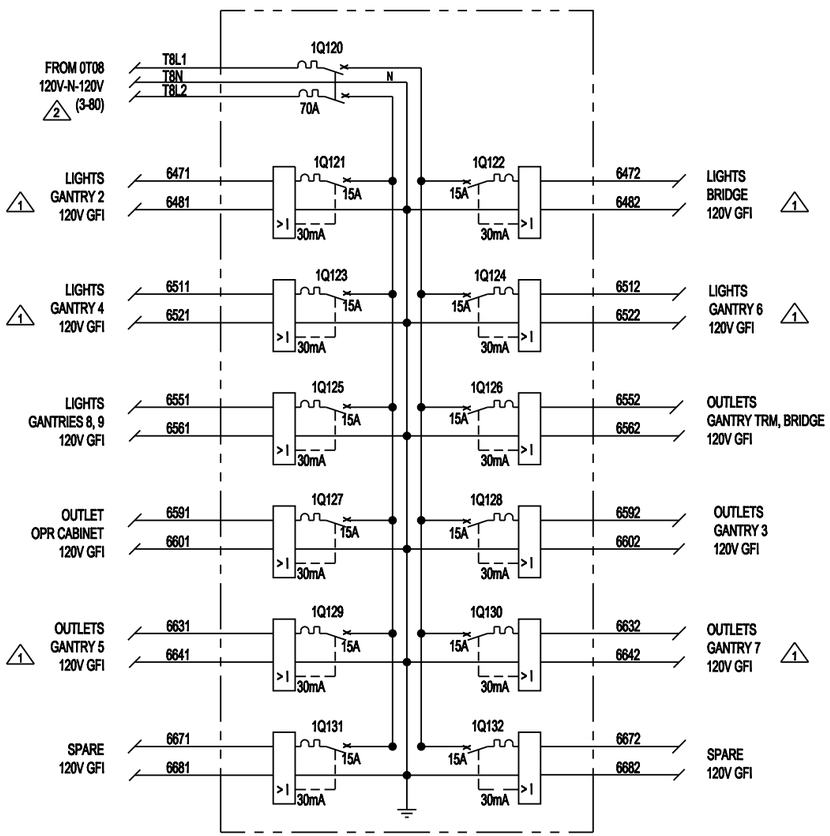

REV	DESCRIPTION	REV'D BY DATE	APP'D BY DATE
2	CHANGED REF NUMBERS	DBS 27SEP12	D.HOBBS 27SEP12
1	CHANGED SHEET NUMBER, CHANGED CALLOUTS ON 0E06	DBS 9JUL12	D.HOBBS 10JUL12

MACHINE	NEXT ASSY
EPB2016-376	1046350
EPB2016-377	1046350

UNLESS NOTED ALL DIMS ARE Inch

TOLERANCES UNLESS NOTED

0 - 1"	± 1/16	FRACTIONS	
1" - 3"	± 1/8	.X	± .03
3" - 20"	± 1/4	.XX	± .015
20" +	± 1/2	.XXX	± .005
		ANGLES	± 1
		SURFACE	125

DIMENSIONS IN () ARE REFERENCE

ALL GEOMETRIC DIMENSIONING & TOLERANCING PER ANSI Y14.5-2009

TITLE: ELECTRICAL SCHEMATIC SAN FRANCISCO

SIZE: D | DWG No.: 1046646 | REV: 2 | SHT: 6 OF 51 | SCALE: 1"0"=1"0" DO NOT SCALE

DRAWN BY: P.BRENNAN | DATE: 3/6/2012 | WEIGHT/VOL:

CHECKED BY/CHKR: P.BRENNAN | CHECKED DESIGN: 3/6/2012

APPROVED BY: D.HOBBS | DATE: 3/6/2012

Robbins

www.TheRobbinsCompany.com

1046646

PROPRIETARY NOTICE
The information disclosed hereon is the sole property of The Robbins Company. It is not to be reproduced in whole or in part, used by or disclosed to others for any purpose without the written permission of The Robbins Company. By accepting this information, recipient agrees to hold it in confidence and to use it only for the purpose for which it was furnished. This notice is not to be removed, altered or obliterated. The information contained herein is subject to change without notice.

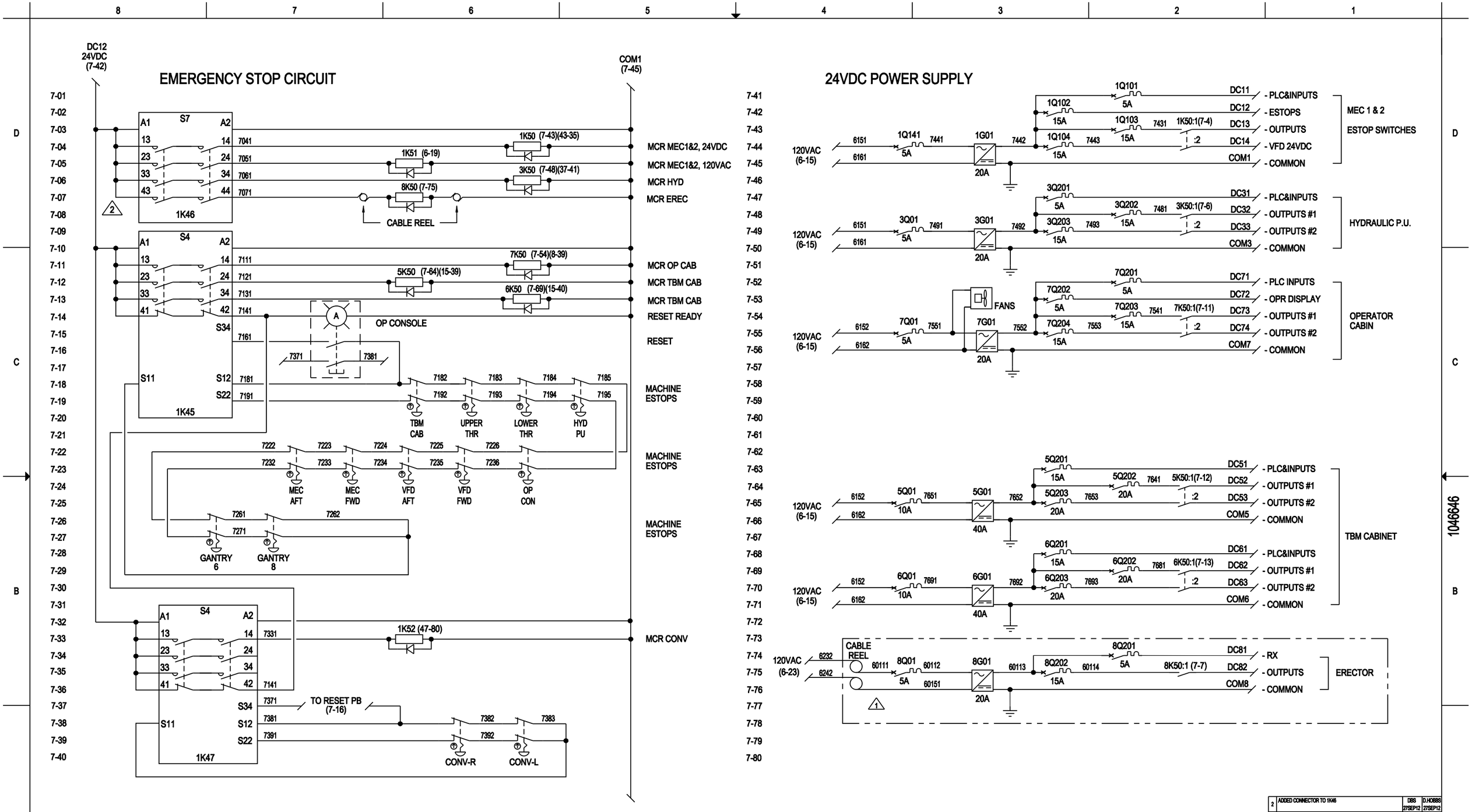

REV	DESCRIPTION	REV'D BY/ DATE	APP'D BY/ DATE
2	ADDED CONNECTOR TO 1K46	DBS 27SEP12	D.HOBBS 27SEP12
1	CHANGED SHEET NUMBER, CHG'D LINE DESIGNATORS	DBS 9JUL12	D.HOBBS 10JUL12

MACHINE	NEXT ASSY
EPB2016-376	1046350
EPB2016-377	1046350

UNLESS NOTED ALL DIMS ARE inch
TOLERANCES UNLESS NOTED
0 - 1" ± 1/16
1" - 5" ± 1/8
5" - 20" ± 1/4
20" + ± 1/2
FRACTIONS/16
.X ± .03
.XX ± .015
.XXX ± .005
ANGLES ± 1
SURFACE 125
FINISH
TWO-ANGLE PROJECTION
DIMENSIONS (X) ARE REFERENCE
ALL GEOMETRIC DIMENSIONING & TOLERANCING PER ANSI Y14.5-2009

PROPRIETARY NOTICE
This information disclosed herein, is the sole property of The Robbins Company and is not to be reproduced in full or part, used by, or disclosed to any other party without prior written consent of The Robbins Company. By accepting this information, the recipient agrees to abide in kind with the foregoing restriction, without any modification to the contents, this material is not to be used, and is to be returned upon request to The Robbins Company.

TITLE
ELECTRICAL SCHEMATIC
SAN FRANCISCO

SIZE D | DWG No. 1046646 | REV 2 | SHT 7 OF 51 | SCALE 1"0"=1"0" DO NOT SCALE

DRAWN BY P.BRENNAN DATE 3/6/2012
CHECKED STANDARDS P.BRENNAN CHECKED DESIGN 3/6/2012
WEIGHT TOTAL
APPROVED BY D.HOBBS DATE 3/6/2012

Robbins

www.TheRobbinsCompany.com

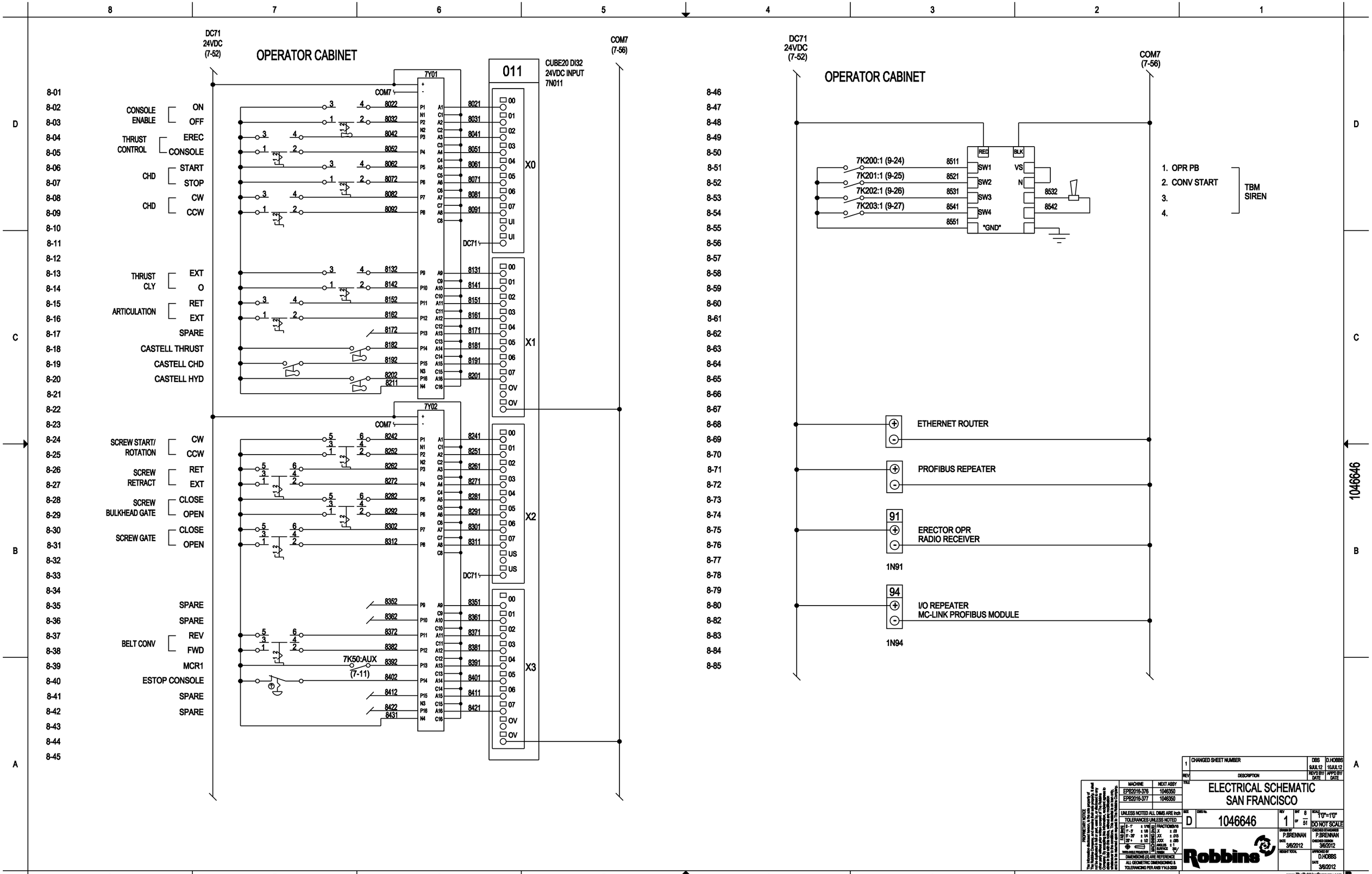

REV	DESCRIPTION	REV'D BY/ DATE	APP'D BY/ DATE
1	CHANGED SHEET NUMBER	DBS 9JUL12	D.HOBBS 10JUL12

MACHINE	NEXT ASSY
EPB2016-376	1046350
EPB2016-377	1046350

UNLESS NOTED ALL DIMS ARE inch

TOLERANCES UNLESS NOTED

0 - 1"	± 1/16
1" - 5"	± 1/8
5" - 20"	± 1/4
20" +	± 1/2

FRACTIONS/16
.X ± .03
.XX ± .015
.XXX ± .005
ANGLES ± 1
SURFACE 125
FINISH

TWO-ANGLE PROJECTION

DIMENSIONS (X) ARE REFERENCE

ALL GEOMETRIC DIMENSIONING & TOLERANCING PER ANSI Y14.5-2009

TITLE: ELECTRICAL SCHEMATIC SAN FRANCISCO

SIZE: D | DWG No. 1046646 | REV 1 | SHT 8 OF 51 | SCALE 1"0"=1'0" DO NOT SCALE

DRAWN BY P.BRENNAN DATE 3/6/2012 | CHECKED ESTIMATOR P.BRENNAN CHECKED DESIGN 3/6/2012

WEIGHT TOTAL | APPROVED BY D.HOBBS DATE 3/6/2012

Robbins

www.TheRobbinsCompany.com

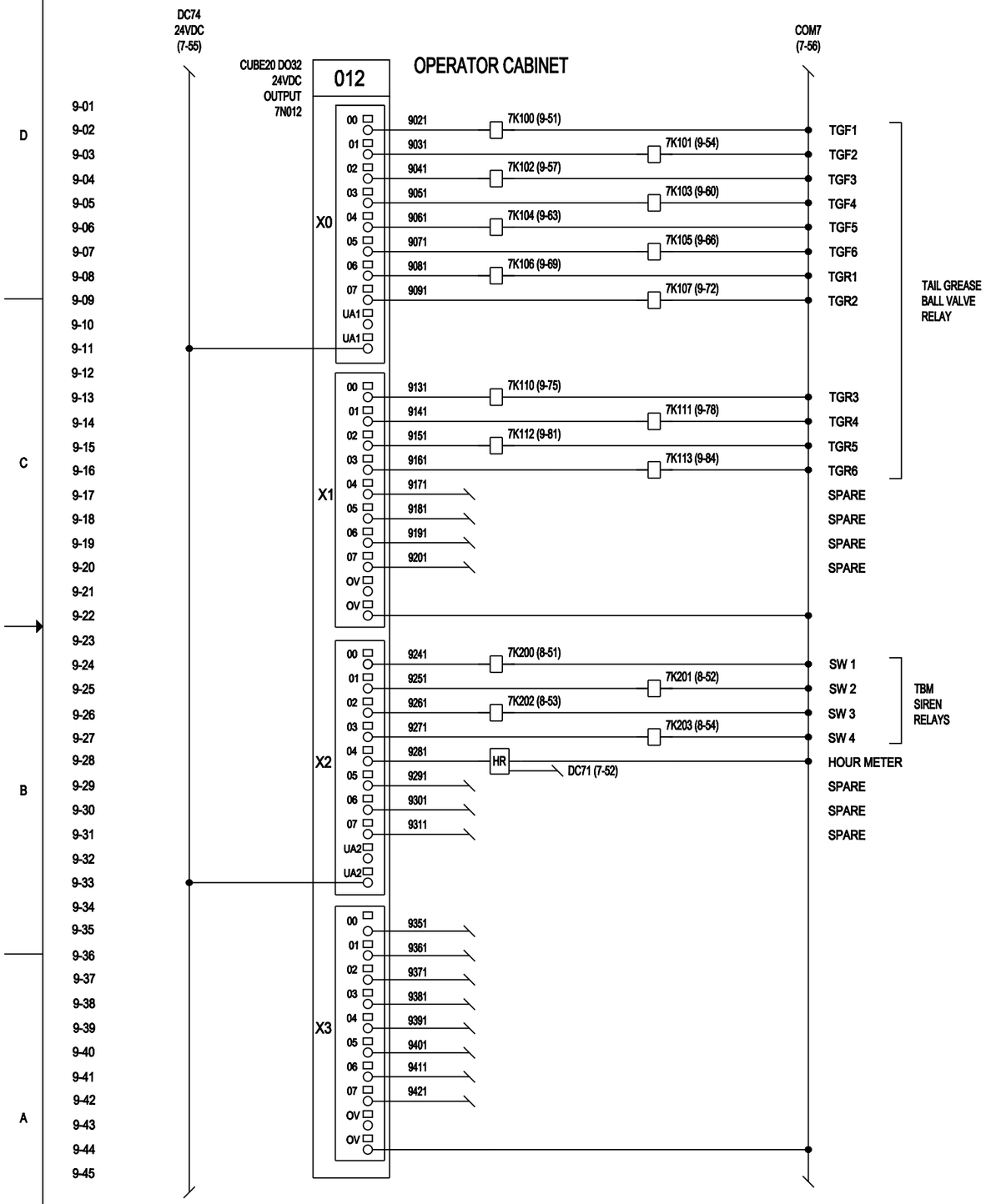

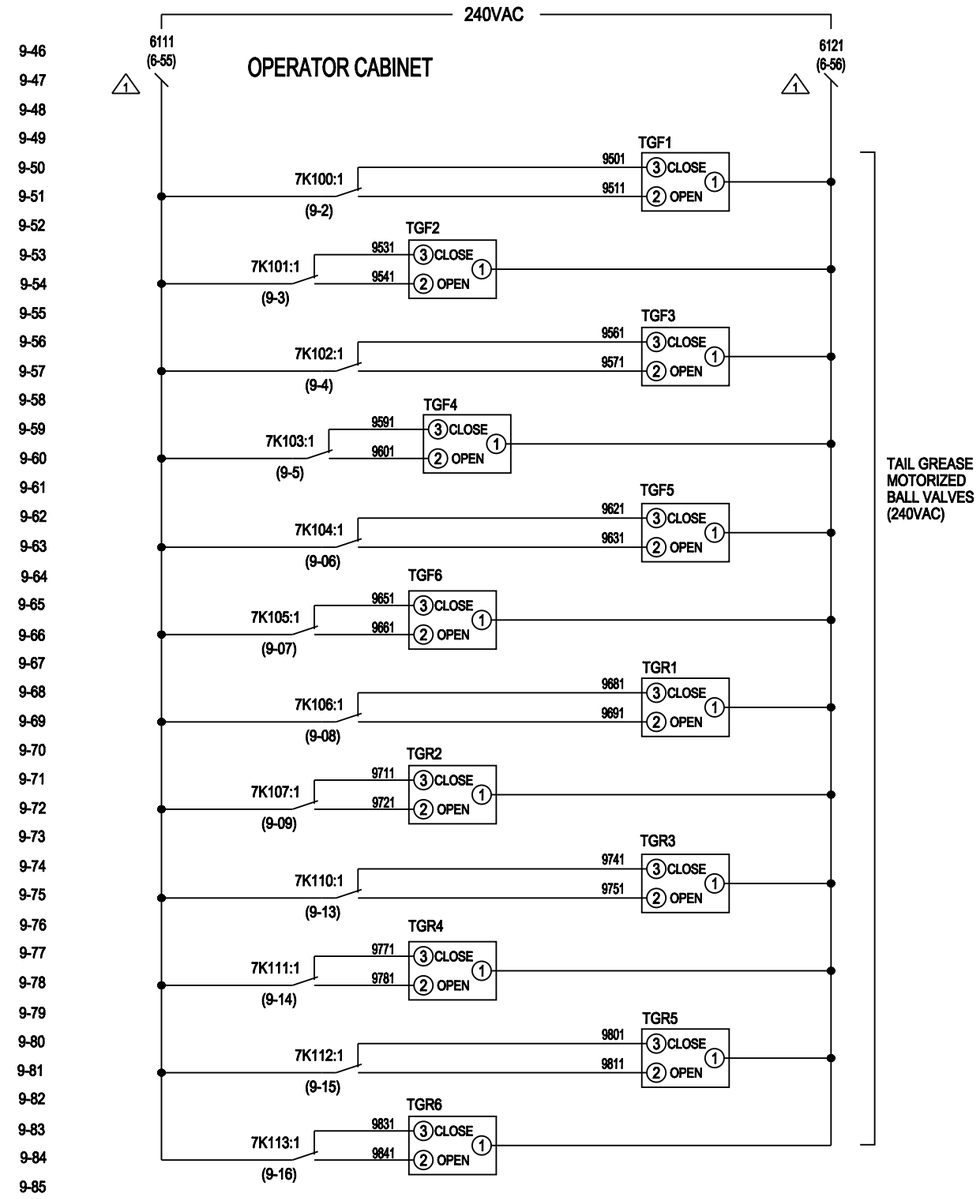

REV	DESCRIPTION	DBS	D.HOBBS
1	CHG'D SHEET NO. CHG'D CALLOUTS LINE IN	9JUL12	10JUL12
		REV'D BY/ DATE	APP'D BY/ DATE

MACHINE	NEXT ASSY
EPB2016-376	1046350
EPB2016-377	1046350

UNLESS NOTED ALL DIMS ARE inch
TOLERANCES UNLESS NOTED
FRACTIONS ± .03
X ± .015
XX ± .005
XXX ± .000
ANGLES ± 1°
SURFACE FINISH
DIMENSIONS [X] ARE REFERENCE
ALL GEOMETRIC DIMENSIONING & TOLERANCING PER ANSI Y14.5-2009

TITLE: ELECTRICAL SCHEMATIC SAN FRANCISCO

SIZE D | DWG No. 1046646 | REV 1 | SHT 9 of 51 | SCALE 1"0"=1'0" DO NOT SCALE

DRAWN BY P.BRENNAN DATE 3/6/2012
CHECKED BY/ENGINEER P.BRENNAN CHECKED DESIGN 3/6/2012
WEIGHT TOTAL
APPROVED BY D.HOBBS DATE 3/6/2012

Robbins

www.TheRobbinsCompany.com

1046646

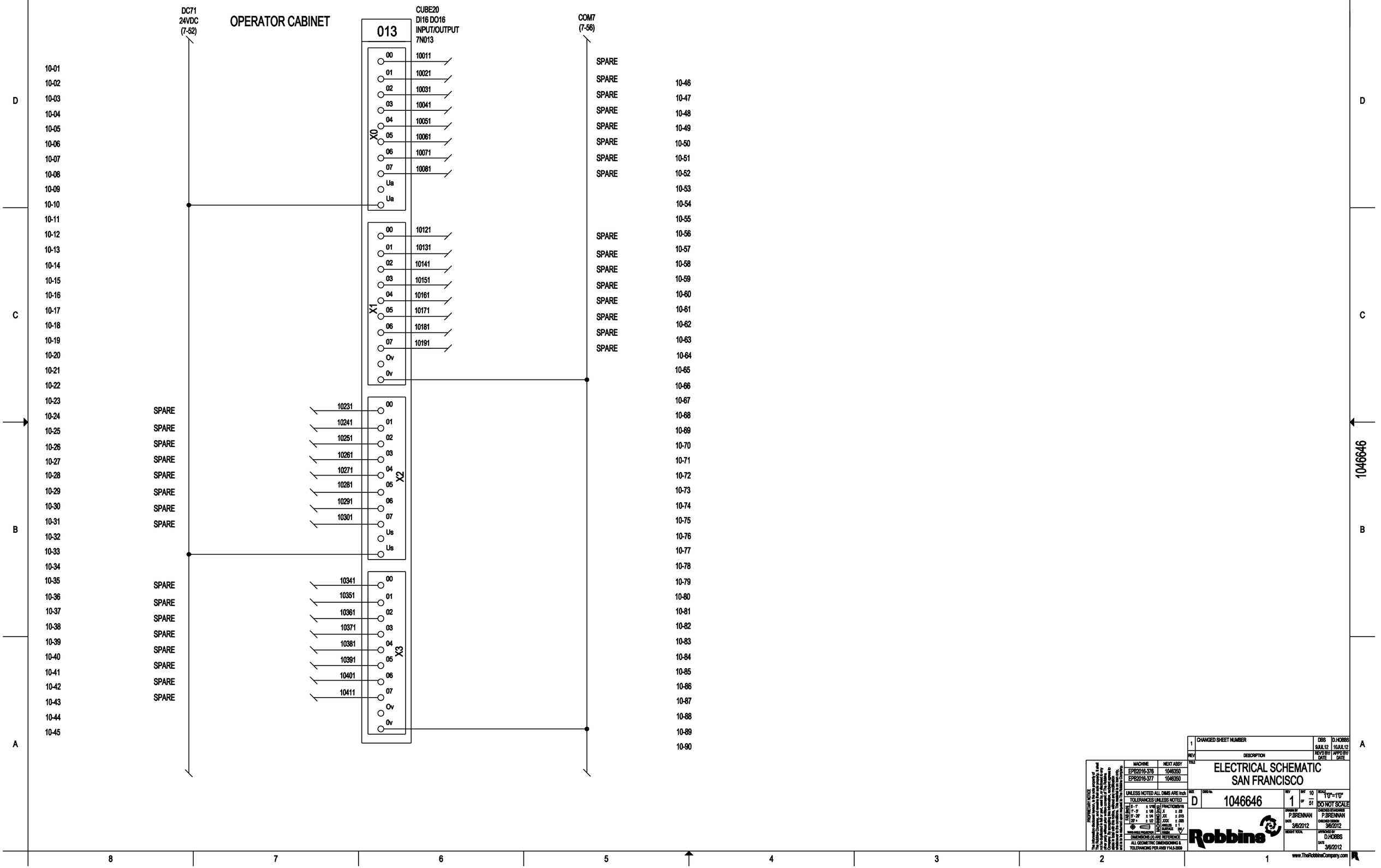

REV	DESCRIPTION	REV'D BY/ DATE	APP'D BY/ DATE
1	CHANGED SHEET NUMBER	DBS 9JUL12	D.HOBBS 10JUL12

MACHINE	NEXT ASSY
EPB2016-376	1046350
EPB2016-377	1046350

UNLESS NOTED ALL DIMS ARE inch

TOLERANCES UNLESS NOTED

0 - 1"	± 1/16	FRACTIONS/16	
1" - 5"	± 1/8	.X	± .03
5" - 20"	± 1/4	.XX	± .015
20" +	± 1/2	.XXX	± .005
		ANGLES	± 1
		SURFACE	125
		FINISH	

MACHINE SHOP TOLERANCES

DIMENSIONS (X) ARE REFERENCE

ALL GEOMETRIC DIMENSIONING & TOLERANCING PER ANSI Y14.5-2009

PROPRIETARY NOTICE

This information disclosed herein, is the sole property of The Robbins Company, and shall not be used, in whole or in part, nor be disclosed to any other party without prior written consent of The Robbins Company. By accepting this information, recipient agrees to abide by the intent of the Robbins Company, and to be returned upon request to The Robbins Company.

TITLE

ELECTRICAL SCHEMATIC SAN FRANCISCO

SIZE	DWG No.	REV	SHT	SCALE
D	1046646	1	10 OF 51	1'0"=1'0" DO NOT SCALE

DRAWN BY	CHECKED BY/ DESIGN
P.BRENNAN	P.BRENNAN
DATE 3/6/2012	CHECKED DESIGN 3/6/2012
WEIGHT TOTAL	APPROVED BY D.HOBBS
	DATE 3/6/2012

Robbins

www.TheRobbinsCompany.com

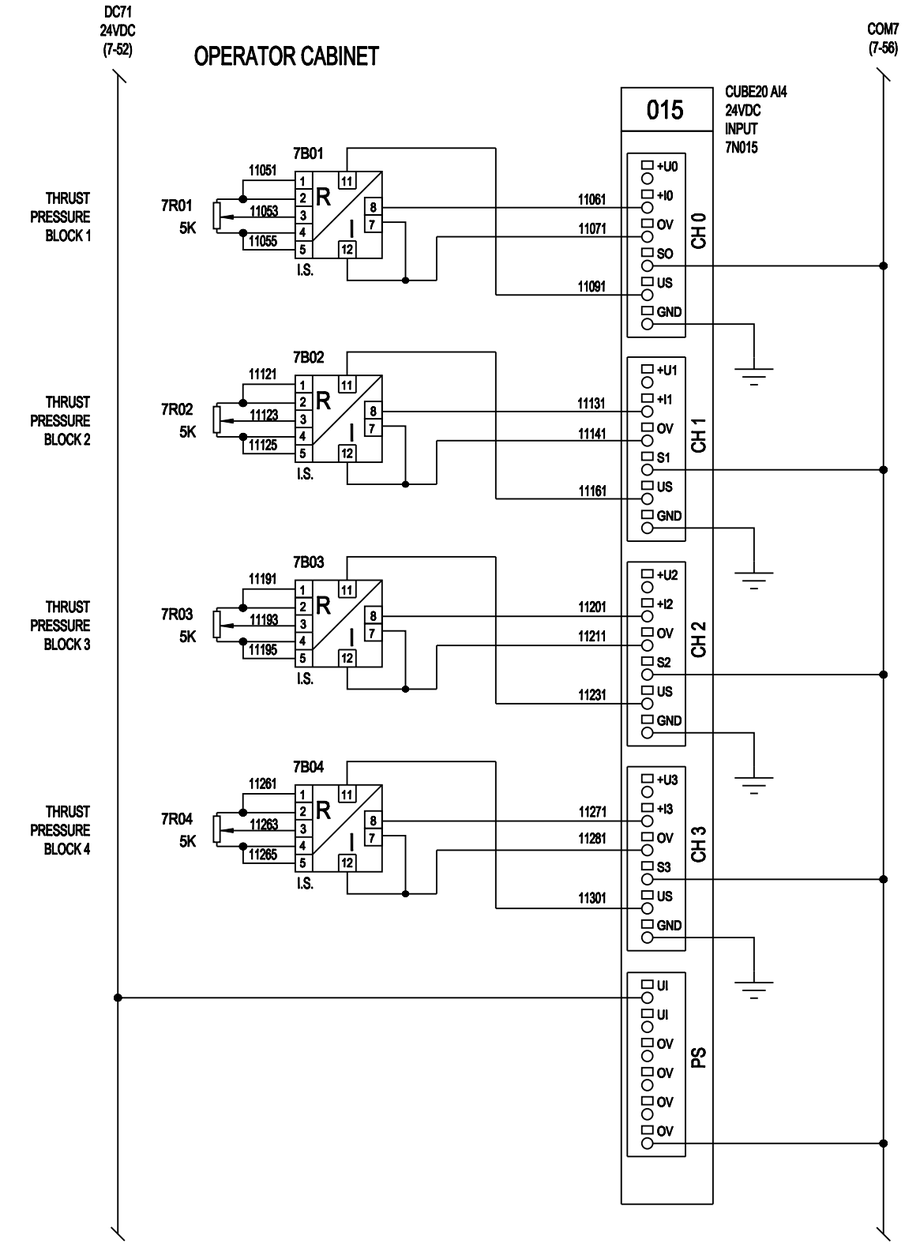

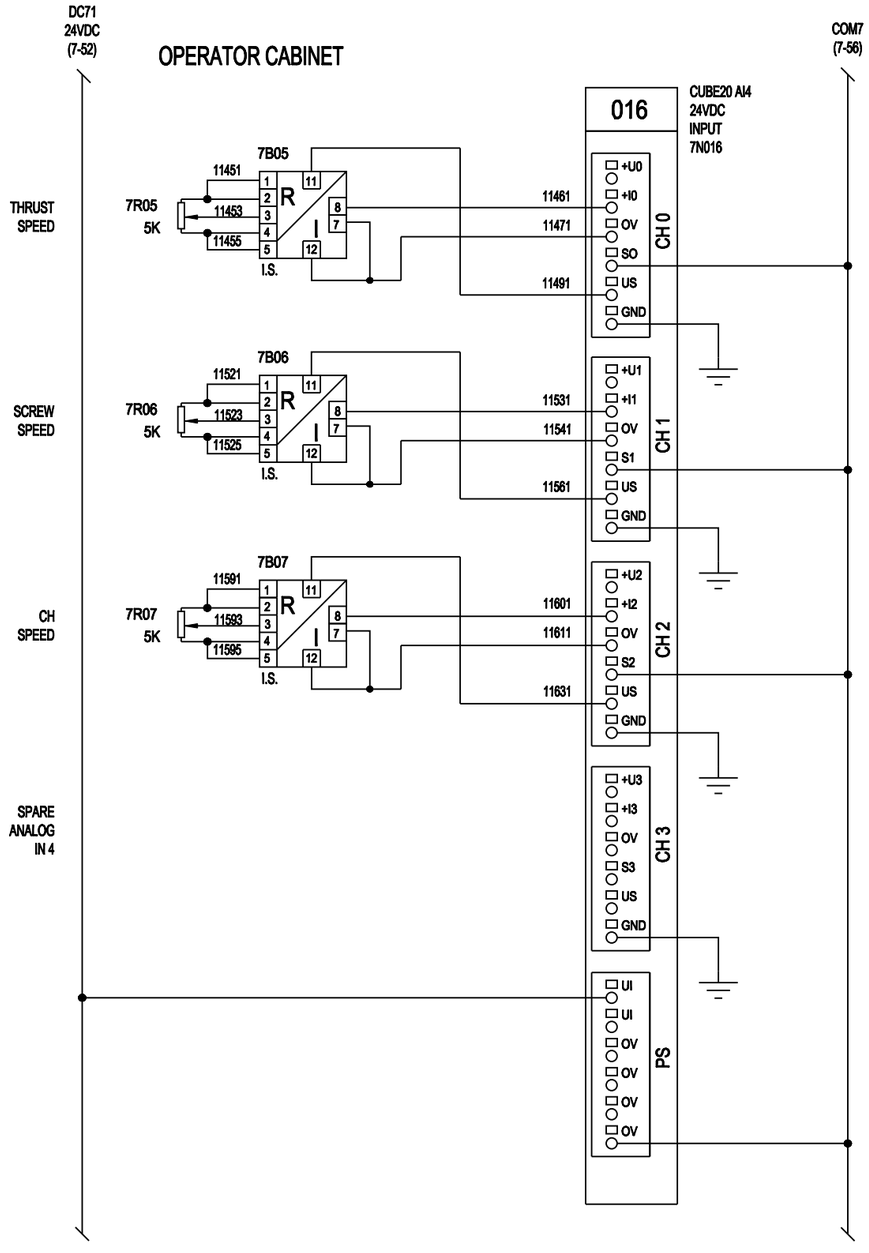

REV	DESCRIPTION	REVD BY / DATE	APPD BY / DATE
1	CHANGED SHEET NUMBER	DBS 9JUL12	D.HOBBS 10JUL12

PROPRIETARY NOTICE
This information disclosed herein, in the sole property of Robbins Company, is submitted in confidence and shall not be published in full or part, used by or disclosed to any person for any purpose without the written permission of Robbins Company. By accepting this information, recipient agrees to abide by the foregoing restrictions and to return this information as directed by Robbins Company upon request. This drawing is an instrument of service, and is the property of Robbins Company. By accepting this drawing, recipient agrees to be responsible for the safekeeping of this drawing while in its possession, and to be liable for any loss or damage to this drawing while in its possession. This drawing is to be used only for the purpose for which it was intended, and is not to be reproduced or copied in whole or part. It is not to be assigned to any third party without prior written permission of Robbins Company. All rights of common law copyright and other property rights in this drawing are specifically reserved.

MACHINE	NEXT ASSY
EPB2016-376	1046350
EPB2016-377	1046350

UNLESS NOTED ALL DIMS ARE Inch
TOLERANCES UNLESS NOTED
0 - 1" ± 1/16 | 1" - 2" ± 1/8 | 2" - 20" ± 1/4 | 20" + ± 1/2
FRACTIONS 1/16 | X ± .03 | XX ± .015 | XXX ± .005 | ANGLES ± 1° | SURFACE FINISH 125
DIMENSIONS (D) ARE REFERENCE
ALL GEOMETRIC DIMENSIONING & TOLERANCING PER ANSI Y14.5-2009

ELECTRICAL SCHEMATIC
SAN FRANCISCO

SIZE	DWG No.	REV	SHT	SCALE
D	1046646	1	11 of 51	1"0"=1'0" DO NOT SCALE

DRAWN BY: P.BRENNAN DATE: 3/6/2012
CHECKED BY/ENGINEER: P.BRENNAN CHECKED DESIGN: 3/6/2012
WEIGHT TOTAL:
APPROVED BY: D.HOBBS DATE: 3/6/2012

Robbins
www.TheRobbinsCompany.com

1046646

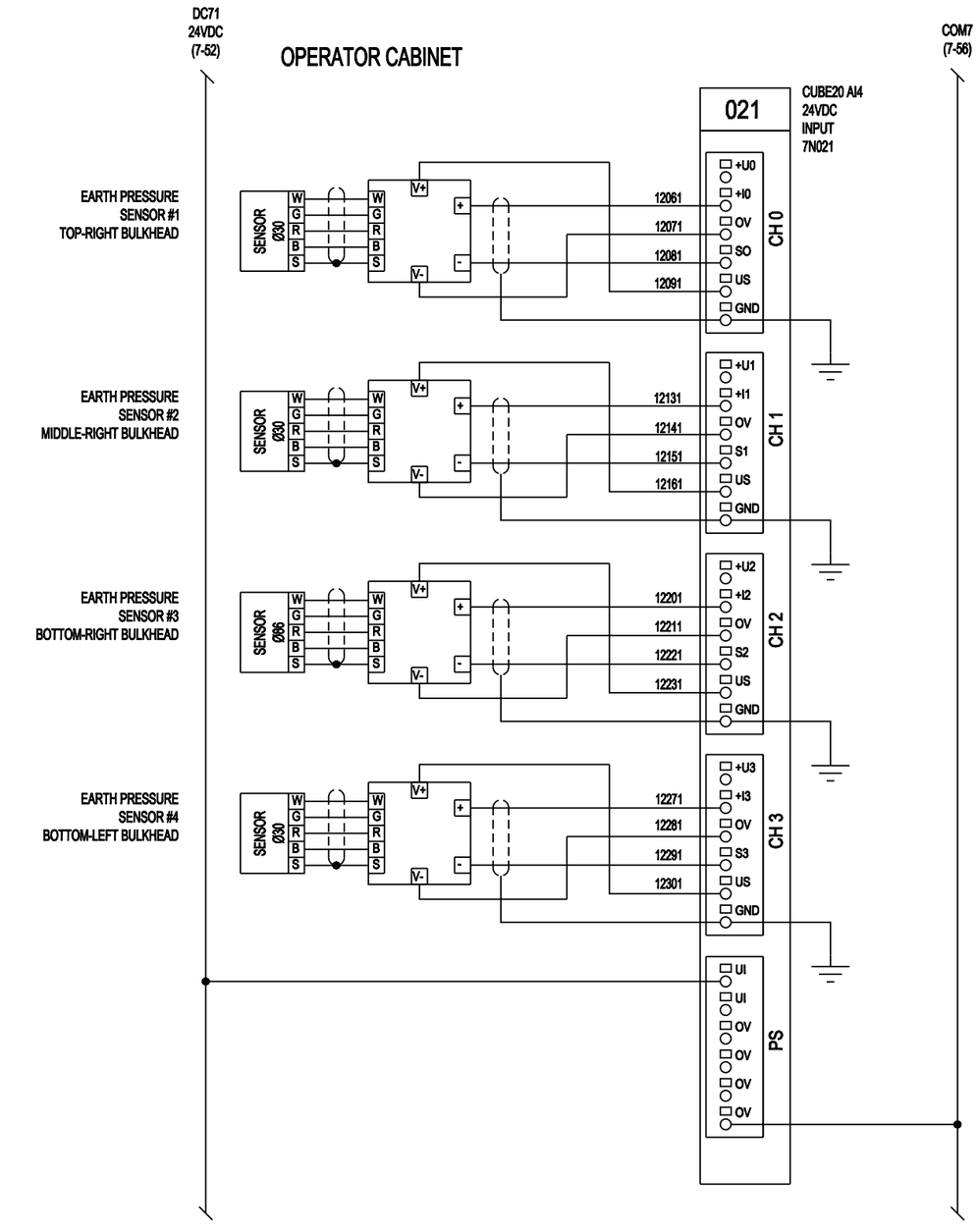

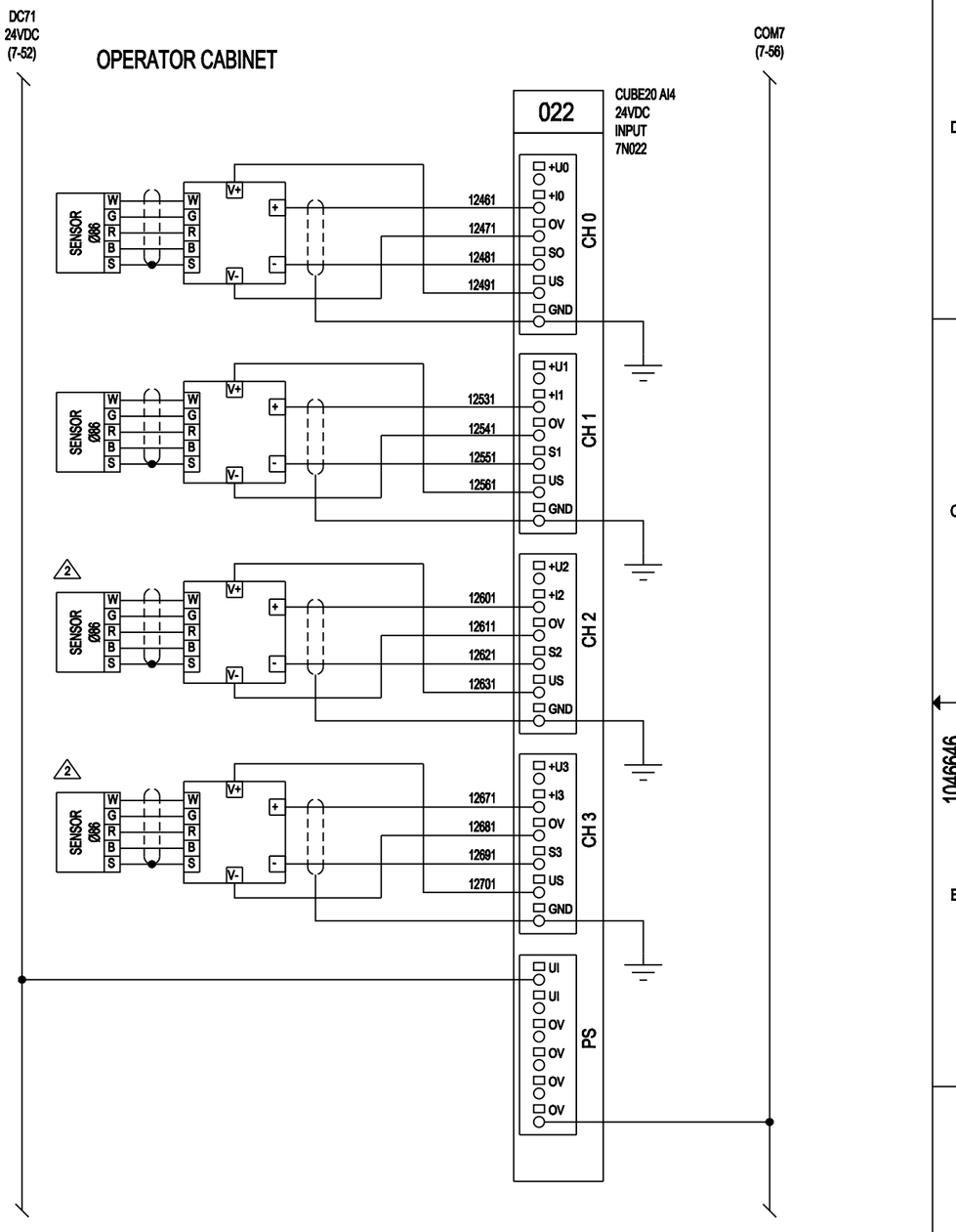

REV	DESCRIPTION	REVD BY / DATE	APP'D BY / DATE
2	CHANGED SENSOR LABLE, WAS 36	DBS 27SEP12	D.HOBBS 27SEP12
1	CHANGED SHEET NUMBER	DBS 9JUL12	D.HOBBS 10JUL12

MACHINE	NEXT ASSY
EPB2016-376	1046350
EPB2016-377	1046350

UNLESS NOTED ALL DIMS ARE Inch
TOLERANCES UNLESS NOTED
0 - 1" ± 1/16 | 1" - 2' ± 1/8 | 2' - 20' ± 1/4 | 20' + ± 1/2
FRACTIONS/16 | X ± .03 | XX ± .015 | XXX ± .005 | ANGLES ± 1 | SURFACE FINISH 125
DIMENSIONS (D) ARE REFERENCE
ALL GEOMETRIC DIMENSIONING & TOLERANCING PER ANSI Y14.5-2009

TITLE: ELECTRICAL SCHEMATIC SAN FRANCISCO

SIZE D | DWG No. 1046646 | REV 2 | SHT 12 OF 51 | SCALE 1"0"=1'0" DO NOT SCALE

DRAWN BY P.BRENNAN DATE 3/6/2012
CHECKED BY/ENGINEER P.BRENNAN CHECKED ENGINEER 3/6/2012
WEIGHT TOTAL
APPROVED BY D.HOBBS DATE 3/6/2012

Robbins
www.TheRobbinsCompany.com

1046646

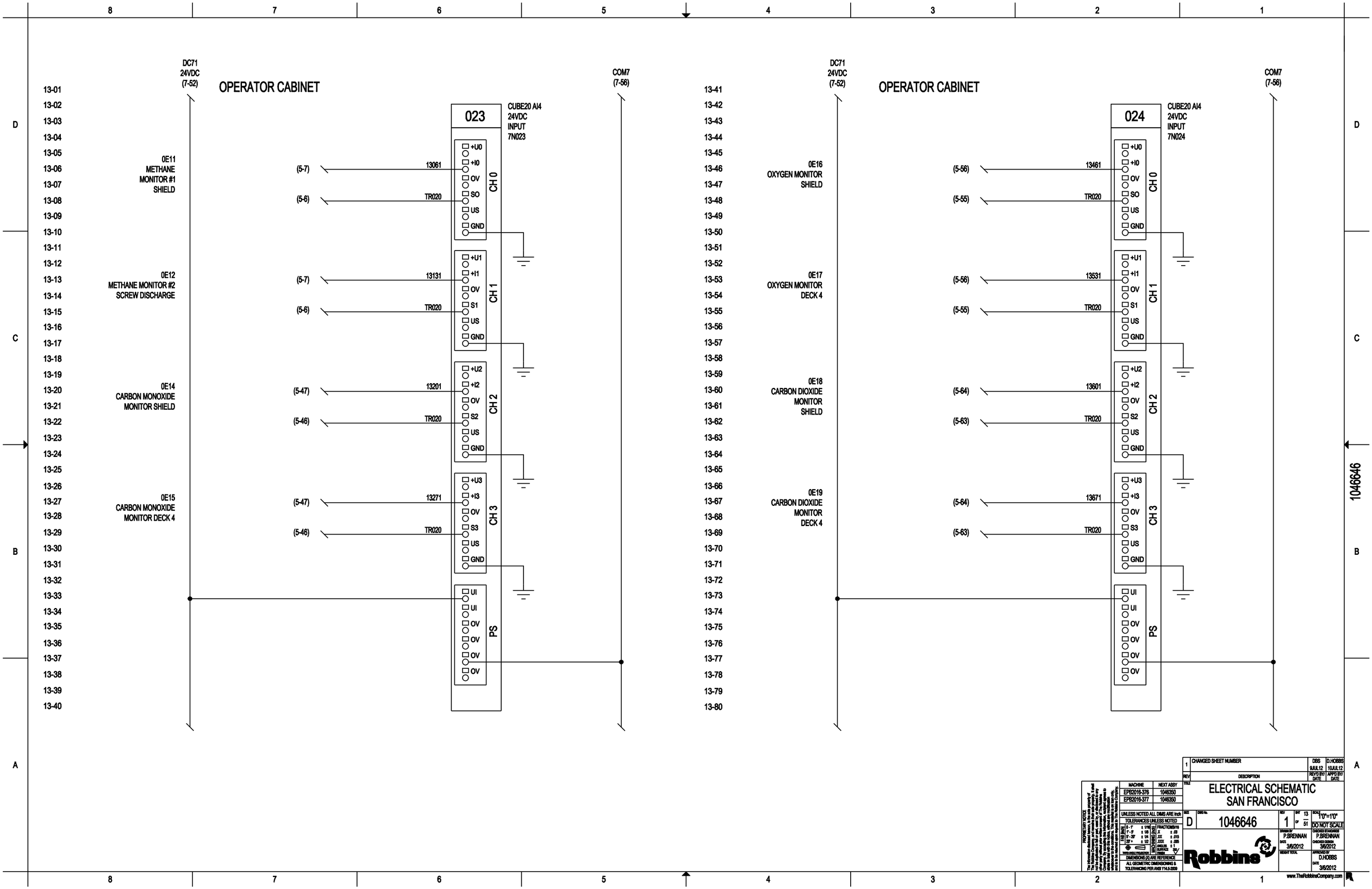

REV	DESCRIPTION	REV'D BY/ DATE	APP'D BY/ DATE
1	CHANGED SHEET NUMBER	DBS 9JUL12	D.HOBBS 10JUL12

MACHINE	NEXT ASSY
EPB2016-376	1046350
EPB2016-377	1046350

UNLESS NOTED ALL DIMS ARE inch

TOLERANCES UNLESS NOTED

0 - 1"	± 1/16	FRACTIONS/16	
1" - 5"	± 1/8	.X	± .03
5" - 20"	± 1/4	.XX	± .015
20" +	± 1/2	.XXX	± .005
		ANGLES	± 1
		SURFACE FINISH	250

MACHINING TOLERANCES

DIMENSIONS (X) ARE REFERENCE

ALL GEOMETRIC DIMENSIONING & TOLERANCING PER ANSI Y14.5-2009

TITLE

ELECTRICAL SCHEMATIC SAN FRANCISCO

SIZE	DWG No.	REV	SHT	SCALE
D	1046646	1	13 OF 51	1"0"=1"0" DO NOT SCALE

DRAWN BY P.BRENNAN DATE 3/6/2012

CHECKED STANDARDS P.BRENNAN CHECKED DESIGN 3/6/2012

WEIGHT TOTAL

APPROVED BY D.HOBBS DATE 3/6/2012

Robbins

www.TheRobbinsCompany.com

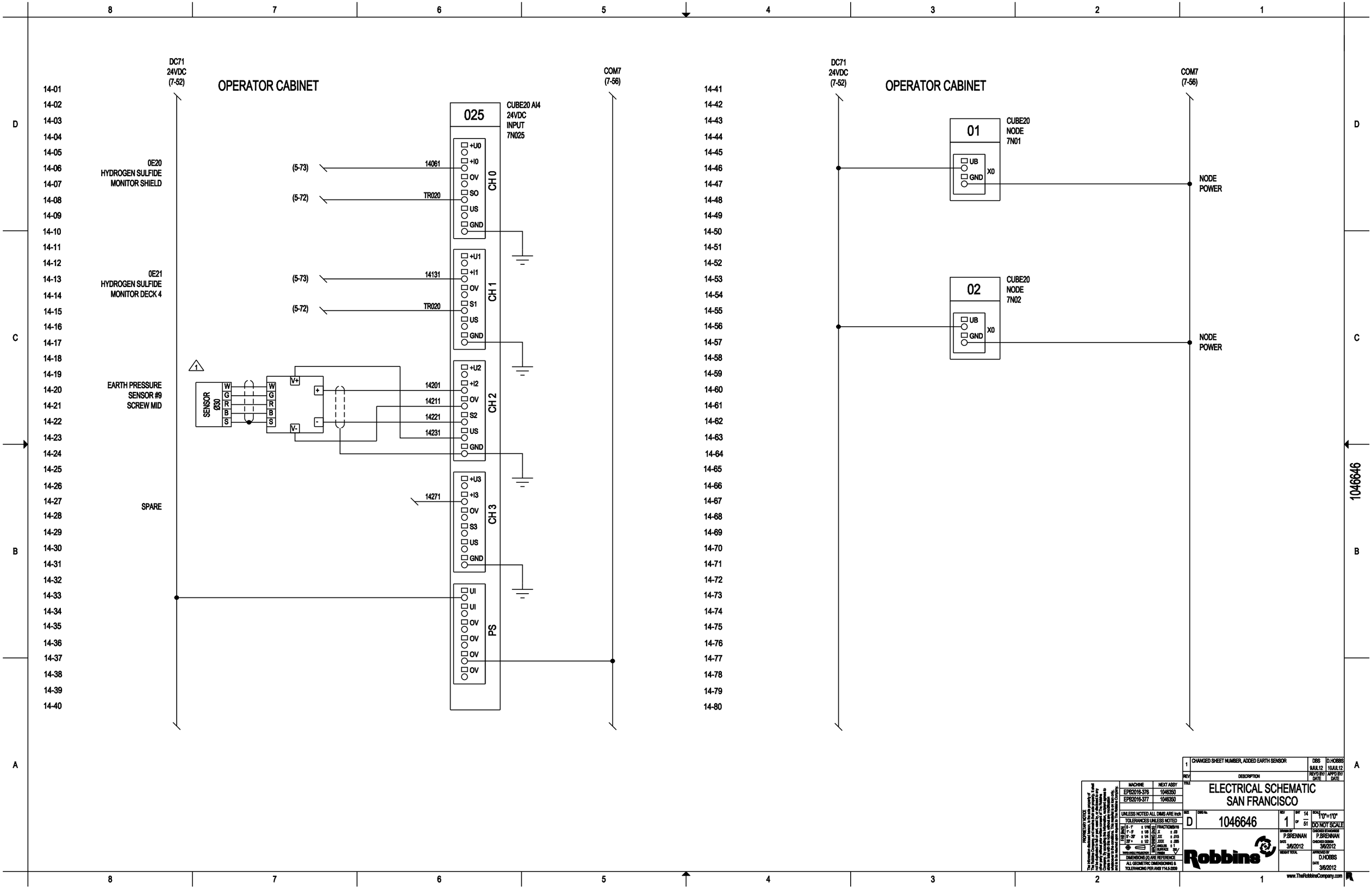

REV	DESCRIPTION	REV'D BY/ DATE	APP'D BY/ DATE
1	CHANGED SHEET NUMBER, ADDED EARTH SENSOR	DBS 9JUL12	D.HOBBS 10JUL12

MACHINE	NEXT ASSY
EPB2016-376	1046350
EPB2016-377	1046350

UNLESS NOTED ALL DIMS ARE inch
TOLERANCES UNLESS NOTED

0 - 1"	± 1/16	FRACTIONS/16	
1" - 5"	± 1/8	.X	± .03
5" - 20"	± 1/4	.XX	± .015
20" +	± 1/2	.XXX	± .005
		ANGLES	± 1
		SURFACE FINISH	125

TWO-HOLE PROJECTION
DIMENSIONS (X) ARE REFERENCE
ALL GEOMETRIC DIMENSIONING & TOLERANCING PER ANSI Y14.5-2009

PROPRIETARY NOTICE
This information disclosed herein, is the sole property of The Robbins Company, Inc. and is not to be used, or used in whole or in part, used by, or disclosed to any other party without prior written consent of The Robbins Company. By accepting this information, recipient agrees to abide by the Robbins Company, without any modification or alteration to the conditions. This material is not to be used, and is to be returned upon request to The Robbins Company.

TITLE
ELECTRICAL SCHEMATIC
SAN FRANCISCO

SIZE D | DWG No. 1046646 | REV 1 | SHT 14 OF 51 | SCALE 1'0"=1'0"
DO NOT SCALE

DRAWN BY P.BRENNAN | DATE 3/6/2012
CHECKED BY/ENGINEER P.BRENNAN | CHECKED DESIGN 3/6/2012
WEIGHT TOTAL
APPROVED BY D.HOBBS | DATE 3/6/2012

Robbins

www.TheRobbinsCompany.com

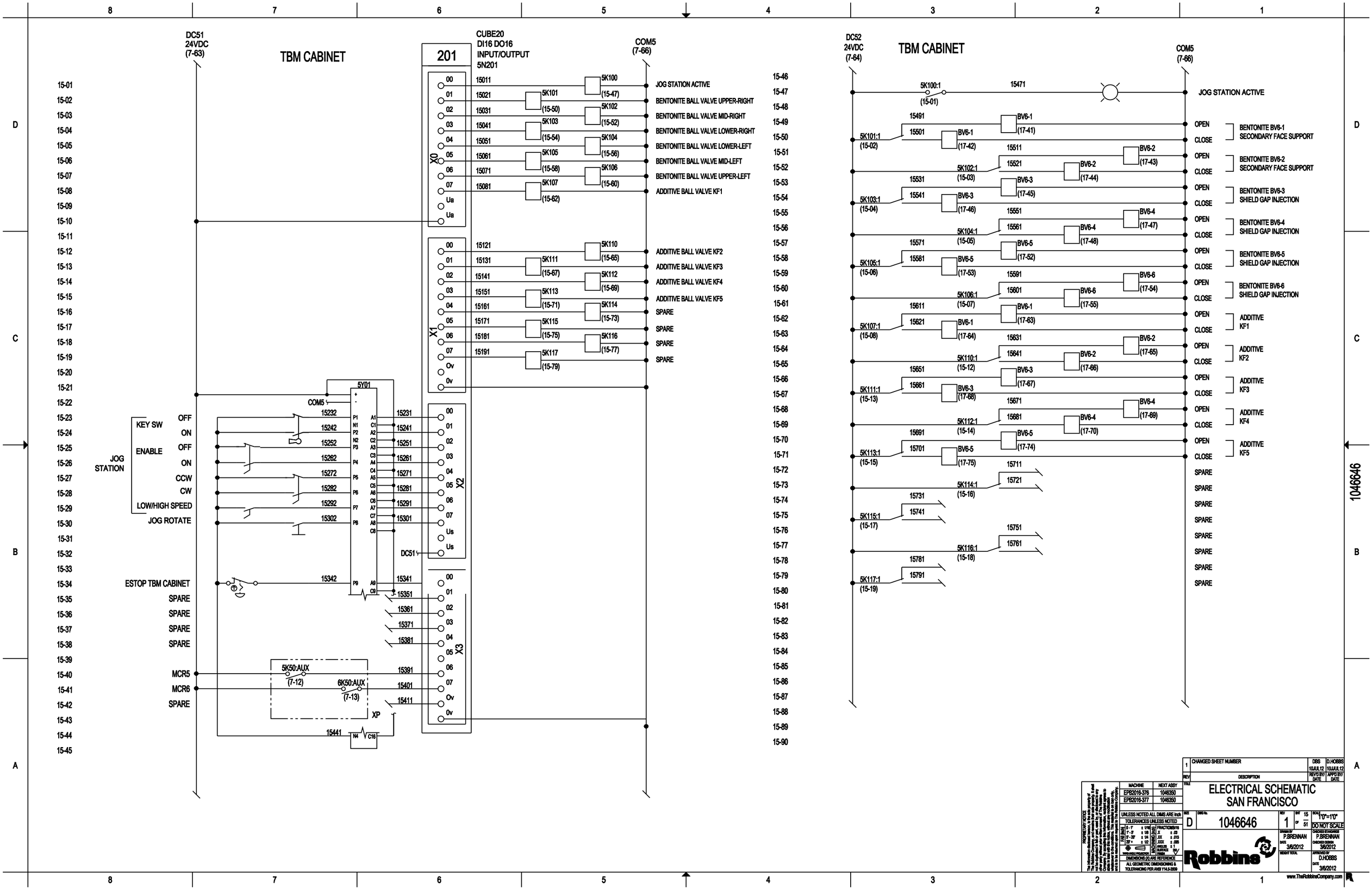

REV	DESCRIPTION	REV'D BY/ DATE	APP'D BY/ DATE
1	CHANGED SHEET NUMBER	DBS 10JUL12	D.HOBBS 10JUL12

MACHINE	NEXT ASSY
EPB2016-376	1046350
EPB2016-377	1046350

UNLESS NOTED ALL DIMS ARE inch
TOLERANCES UNLESS NOTED

0 - 1"	± 1/16	FRACTIONS/16	
1" - 5"	± 1/8	.X	± .03
5" - 20"	± 1/4	.XX	± .015
20" +	± 1/2	.XXX	± .005
		ANGLES	± 1
		SURFACE	125
		FINISH	

MACHINE DIMENSIONS
DIMENSIONS (X) ARE REFERENCE
ALL GEOMETRIC DIMENSIONING & TOLERANCING PER ANSI Y14.5-2009

PROPRIETARY NOTICE
This information disclosed herein, is the sole property of The Robbins Company, and is not to be used, or disclosed to any other party without prior written consent of The Robbins Company. By accepting this information, the recipient agrees to abide by the Robbins Company, without any modification whatsoever to the contents. This material is to be held only, and is to be returned upon request to The Robbins Company.

TITLE
ELECTRICAL SCHEMATIC SAN FRANCISCO

SIZE D | DWG No. 1046646 | REV 1 | SHT 15 OF 51 | SCALE 1'0"=1'0" DO NOT SCALE

DRAWN BY P.BRENNAN DATE 3/6/2012
CHECKED STANDARDS P.BRENNAN CHECKED DESIGN 3/6/2012
WEIGHT TOTAL
APPROVED BY D.HOBBS DATE 3/6/2012

Robbins

www.TheRobbinsCompany.com

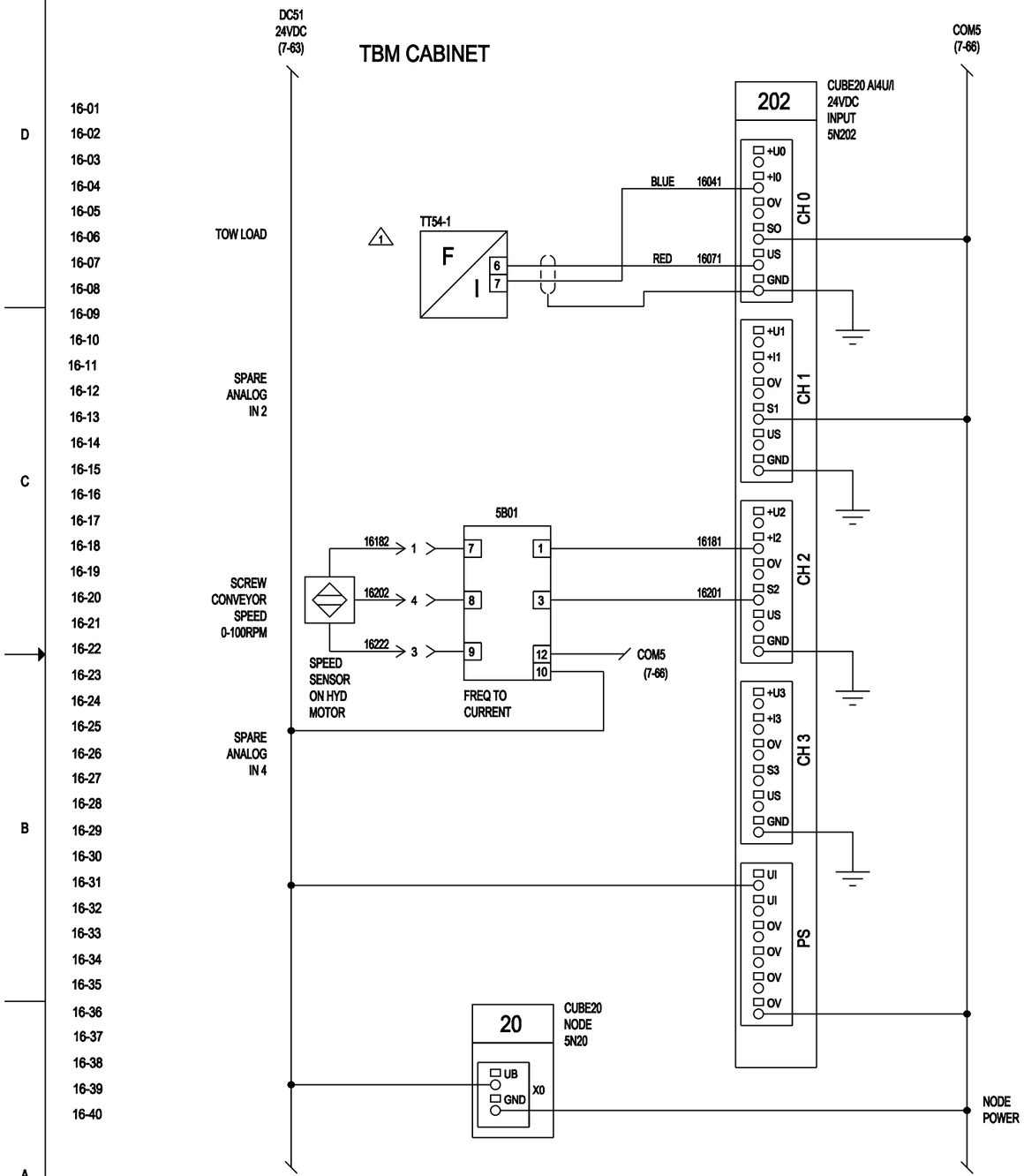

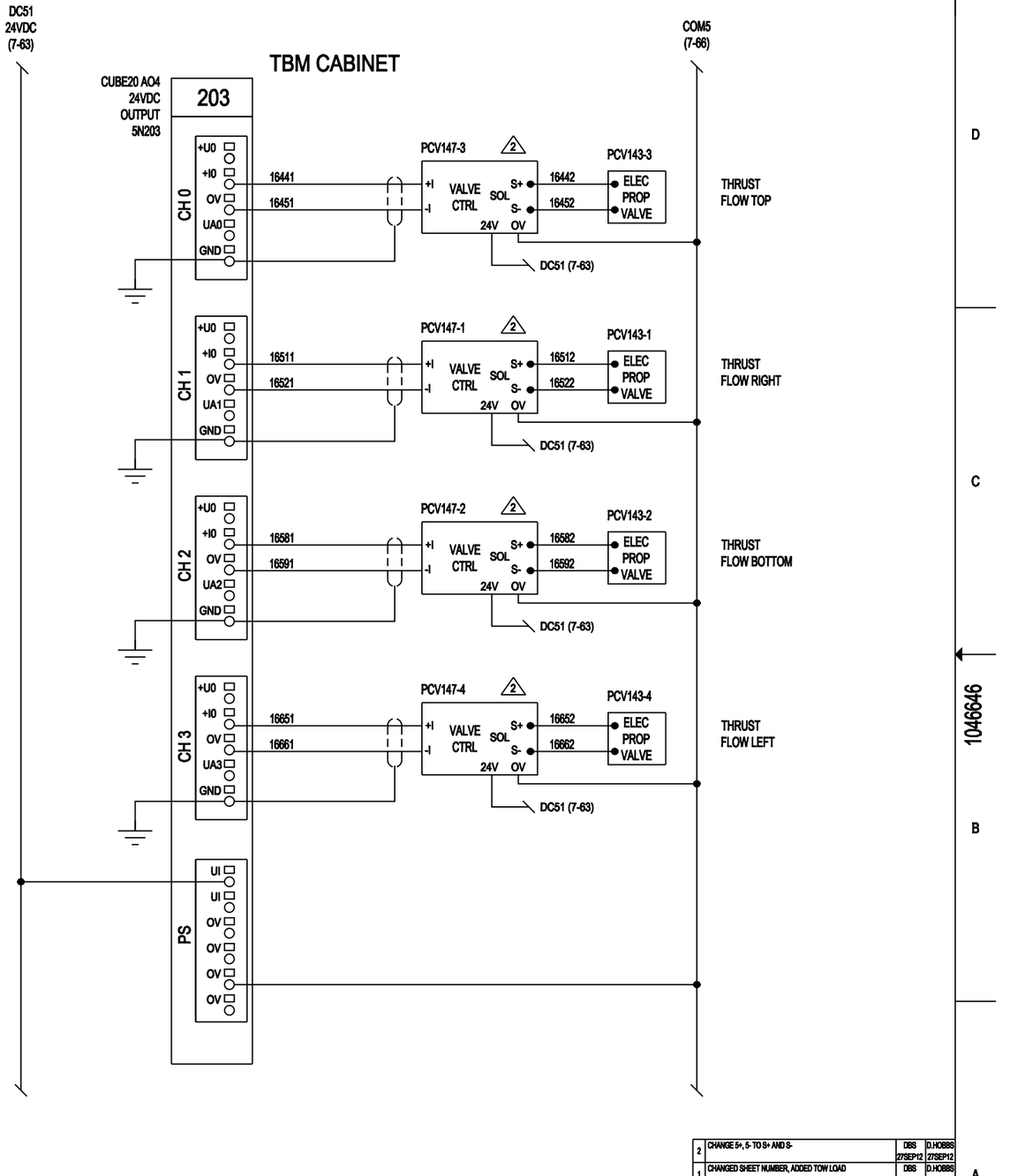

REV	DESCRIPTION	REVD BY / DATE	APPD BY / DATE
2	CHANGE S+, S- TO S+ AND S-	DBS 27SEP12	D.HOBBS 27SEP12
1	CHANGED SHEET NUMBER, ADDED TOW LOAD	DBS 10JUL12	D.HOBBS 10JUL12

MACHINE	NEXT ASSY
EPB2016-376	1046550
EPB2016-377	1046550

UNLESS NOTED ALL DIMS ARE Inch
TOLERANCES UNLESS NOTED
DIMENSIONS (X) ARE REFERENCE
ALL GEOMETRIC DIMENSIONING & TOLERANCING PER ANSI Y14.5-2009

TITLE: ELECTRICAL SCHEMATIC SAN FRANCISCO

SIZE D | DWG No. 1046646 | REV 2 | SHT 16 of 51 | SCALE 1"0"=1"0" | DO NOT SCALE

DRAWN BY P.BRENNAN DATE 3/6/2012
CHECKED ENGINEER P.BRENNAN CHECKED DESIGN 3/6/2012
WEIGHT TOOL
APPROVED BY D.HOBBS DATE 3/6/2012

Robbins

www.TheRobbinsCompany.com

1046646

PROPRIETARY NOTICE
The information disclosed hereon, in the sole property of The Robbins Company and is not to be disclosed to any party not authorized in writing by The Robbins Company. By accepting this information, the recipient agrees to hold it in confidence and to use it only for the purpose for which it is furnished. This notice is not to be construed as an admission or presumption of publication or unrestricted right. This notice is not to be removed or defaced. The recipient agrees to indemnify The Robbins Company for any loss or injury caused by unauthorized use.

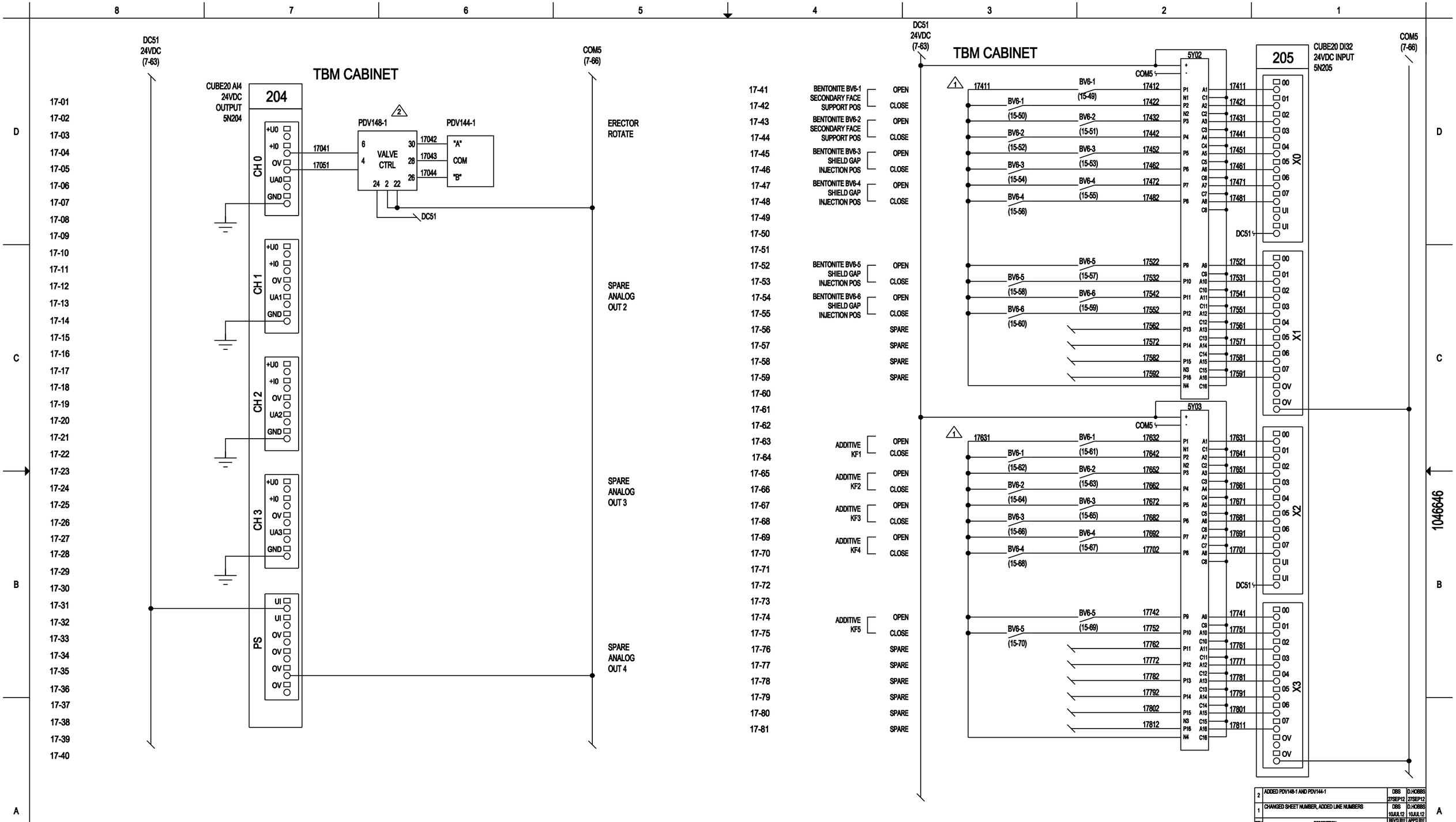

REV	DESCRIPTION	DBS 10JUL12	D.HOBBS 10JUL12
2	ADDED PDV148-1 AND PDV144-1	DBS 27SEP12	D.HOBBS 27SEP12
1	CHANGED SHEET NUMBER, ADDED LINE NUMBERS	DBS 10JUL12	D.HOBBS 10JUL12

MACHINE	NEXT ASSY
EPB2016-376	1046350
EPB2016-377	1046350

UNLESS NOTED ALL DIMS ARE inch
TOLERANCES UNLESS NOTED
0 - 1" ± 1/16
1" - 5" ± 1/8
5" - 20" ± 1/4
20" + ± 1/2
FRACTIONS/16
.X ± .03
.XX ± .015
.XXX ± .005
ANGLES ± 1
SURFACE 125
DIMENSIONS (X) ARE REFERENCE
ALL GEOMETRIC DIMENSIONING & TOLERANCING PER ANSI Y14.5-2009

PROPRIETARY NOTICE
This information disclosed herein, is the sole property of The Robbins Company, and shall not be reproduced in full or part, used by, or disclosed to any other party without prior written consent of The Robbins Company. By accepting this information, recipient agrees to abide in total with the foregoing, without any modification or alteration of the contents. This material is not to be used, sold to be returned upon request to The Robbins Company.

TITLE
ELECTRICAL SCHEMATIC SAN FRANCISCO

SIZE D | DWG No. 1046646 | REV 2 | SHT 17 OF 51 | SCALE 1'0"=1'0" DO NOT SCALE

DRAWN BY P.BRENNAN DATE 3/6/2012
CHECKED STANDARDS P.BRENNAN 3/6/2012
WEIGHT TOTAL
APPROVED BY D.HOBBS DATE 3/6/2012

Robbins

www.TheRobbinsCompany.com

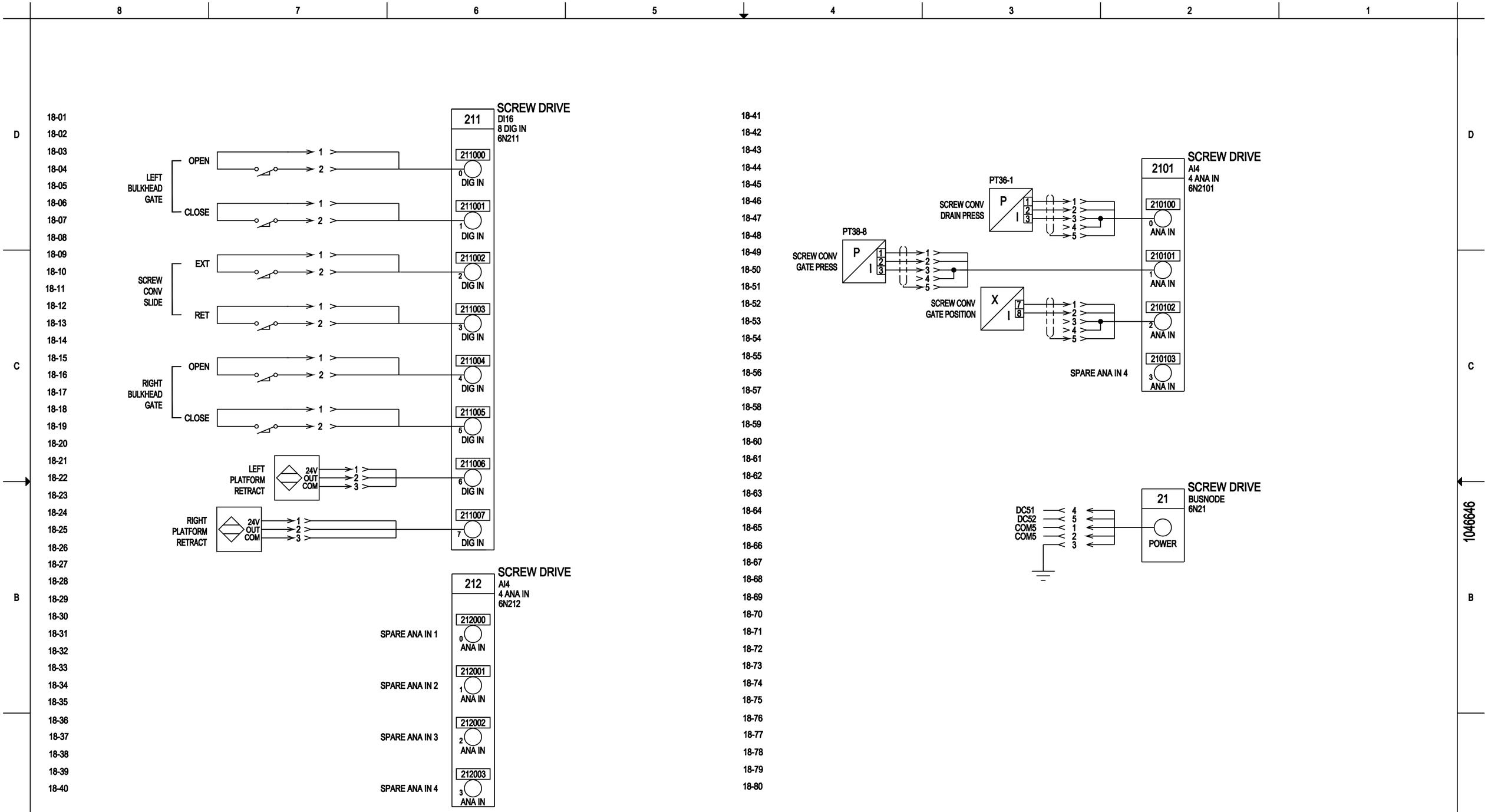

REV	DESCRIPTION	REV'D BY DATE	APP'D BY DATE
1	CHANGED SHEET NUMBER	DBS 10JUL12	D.HOBBS 10JUL12

MACHINE	NEXT ASSY
EPB2016-376	1046350
EPB2016-377	1046350

UNLESS NOTED ALL DIMS ARE inch
TOLERANCES UNLESS NOTED
0 - 1" ± 1/16
1" - 5" ± 1/8
5" - 20" ± 1/4
20" + ± 1/2
FRACTIONS ± 1/16
.X ± .03
.XX ± .015
.XXX ± .005
ANGLES ± 1
SURFACE FINISH 125
DIMENSIONS (X) ARE REFERENCE
ALL GEOMETRIC DIMENSIONING & TOLERANCING PER ANSI Y14.5-2009

PROPRIETARY NOTICE
This information disclosed herein, is the sole property of The Robbins Company, and is not to be used, copied, or used for the purpose of any other person or other than the Robbins Company. It shall not be disclosed to a third party without prior written consent of The Robbins Company. By accepting this information, the recipient agrees to obtain the prior written consent of The Robbins Company, and to be held to the conditions, without any modification, whatsoever to the contents. This material is not to be used, copied, or used for the purpose of any other person or other than the Robbins Company.

TITLE
ELECTRICAL SCHEMATIC SAN FRANCISCO

SIZE D | DWG No. 1046646 | REV 1 | SHT 18 OF 51 | SCALE 1"0"=1"0" DO NOT SCALE

DRAWN BY P.BRENNAN DATE 3/6/2012
CHECKED STANDARDS P.BRENNAN CHECKED DESIGN 3/6/2012
WEIGHT TOTAL
APPROVED BY D.HOBBS DATE 3/6/2012

Robbins

www.TheRobbinsCompany.com

19-01
19-02
19-03
19-04
19-05
19-06
19-07
19-08
19-09
19-10
19-11
19-12 SPARE DIG I/O 0
19-13
19-14 SPARE DIG I/O 1
19-15
19-16 SPARE DIG I/O 2
19-17
19-18 SPARE DIG I/O 3
19-19
19-20 SPARE DIG I/O 4
19-21
19-22 SPARE DIG I/O 5
19-23
19-24 SPARE DIG I/O 6
19-25
19-26 SPARE DIG I/O 7
19-27
19-28
19-29
19-30
19-31
19-32
19-33
19-34
19-35
19-36
19-37
19-38
19-39
19-40
19-41
19-42
19-43
19-44
19-45

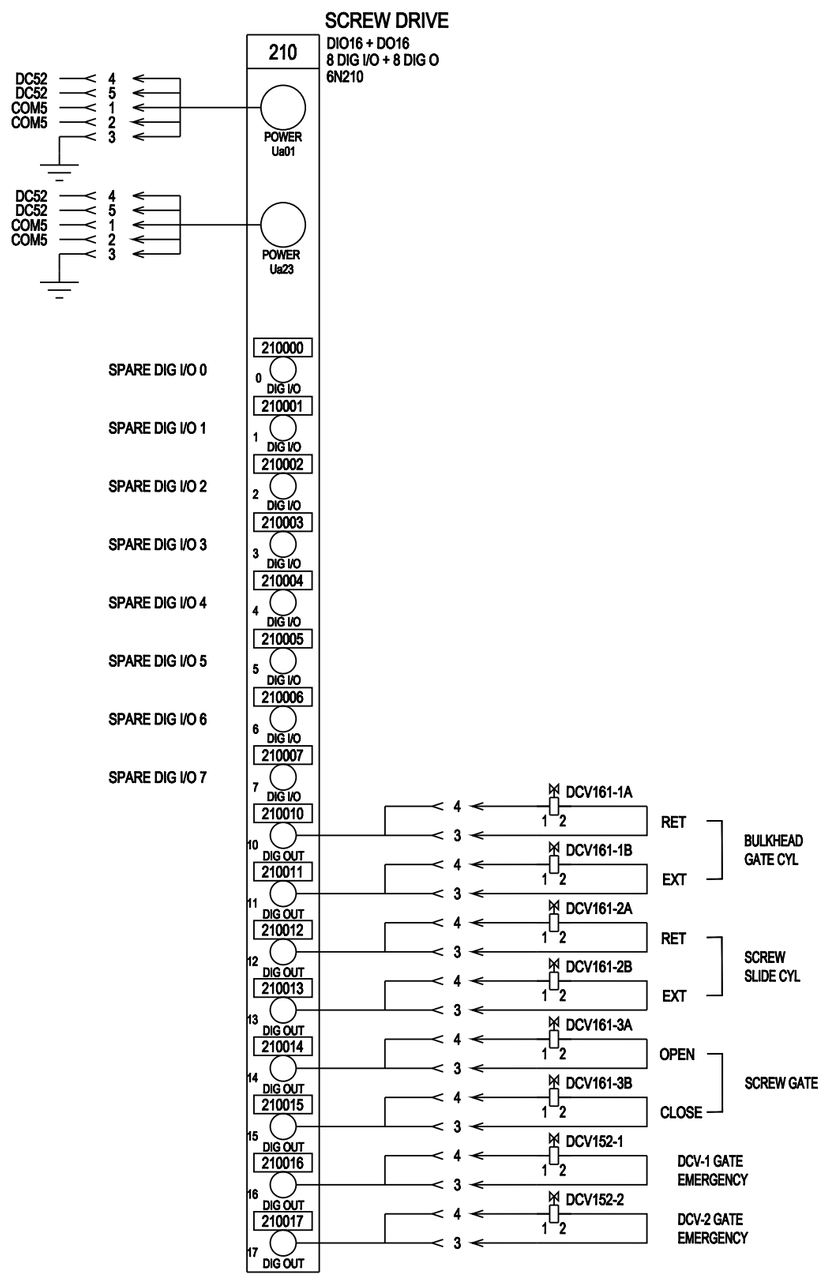

19-46
19-47
19-48
19-49
19-50
19-51
19-52
19-53
19-54
19-55
19-56
19-57
19-58
19-59
19-60
19-61
19-62
19-63
19-64
19-65
19-66
19-67
19-68
19-69
19-70
19-71
19-72
19-73
19-74
19-75
19-76
19-77
19-78
19-79
19-80
19-81
19-82
19-83
19-84
19-85
19-86
19-87
19-88
19-89
19-90

REV	DESCRIPTION	REV'D BY / DATE	APP'D BY / DATE
1	CHANGED SHEET NUMBER	DBS 10JUL12	D.HOBBS 10JUL12

TITLE: ELECTRICAL SCHEMATIC SAN FRANCISCO

MACHINE	NEXT ASSY
EPB2016-376	1046350
EPB2016-377	1046350

UNLESS NOTED ALL DIMS ARE Inch
TOLERANCES UNLESS NOTED
0 - 1" ± 1/16 | FRACTIONS 1/16
1" - 5" ± 1/8 | X ± .03
5" - 20" ± 1/4 | XX ± .015
20" + ± 1/2 | XXX ± .005
ANGLES ± 1
SURFACE FINISH 125
THIRD ANGLE PROJECTION
DIMENSIONS (X) ARE REFERENCE
ALL GEOMETRIC DIMENSIONING & TOLERANCING PER ANSI Y14.5-2009

SIZE D | DWG No. 1046646 | REV 1 | SHT 19 OF 51 | SCALE 1"0"=1"0" | DO NOT SCALE
DRAWN BY P.BRENNAN | DATE 3/6/2012
CHECKED BY/ENGINEER P.BRENNAN | CHECKED DESIGN 3/6/2012
WEIGHT TOTAL | APPROVED BY D.HOBBS | DATE 3/6/2012

Robbins
www.TheRobbinsCompany.com

1046646

PROPRIETARY NOTICE
The information disclosed hereon, in the sole property of The Robbins Company and is not to be reproduced in full or part, used by or disclosed to any person or entity for any purpose without the written permission of The Robbins Company. By accepting this information, it is agreed that this information will be held in confidence and will not be disclosed to any person or entity except as authorized in the conditions. This restriction is to limit use, but not to limit the recipient's right to use information contained in the data if it is obtained from another source without restriction.

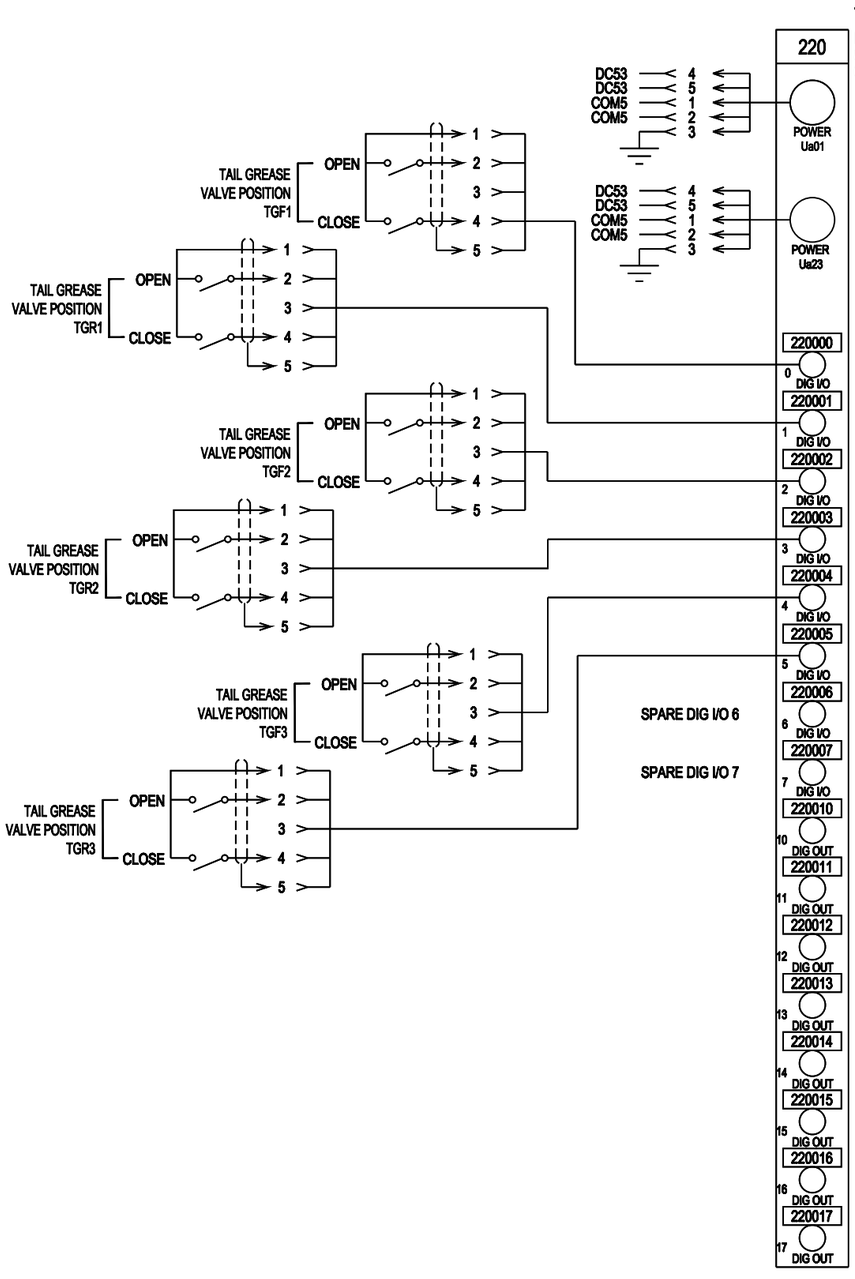

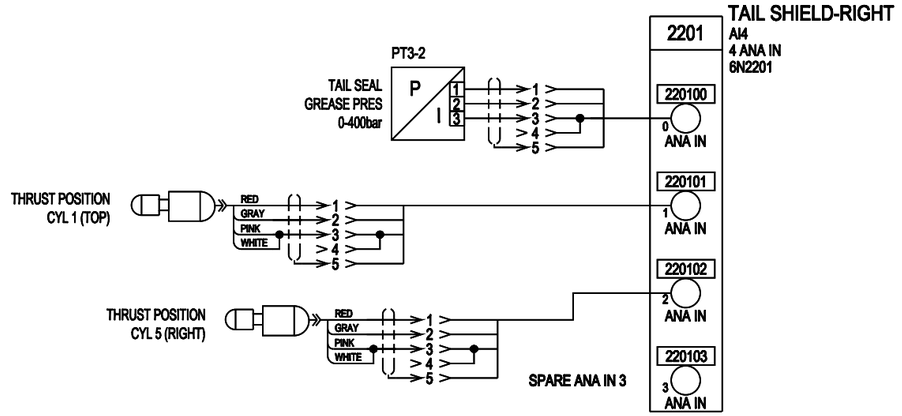

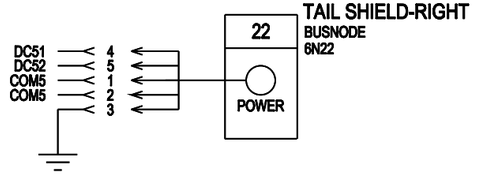

1	CHANGED SHEET NUMBER	DBS 10JUL12	D.HOBBS 10JUL12
REV	DESCRIPTION	REVD BY/ DATE	APPD BY/ DATE

MACHINE	NEXT ASSY
EPS2016-376	1046350
EPS2016-377	1046350

UNLESS NOTED ALL DIMS ARE Inch
TOLERANCES UNLESS NOTED
FRACTIONS/16 ± 1/64 | X ± .03 | XX ± .010 | XXX ± .005 | ANGLES ± 1 | MATERIAL
DIMENSIONS (X) ARE REFERENCE.
ALL GEOMETRIC DIMENSIONING & TOLERANCING PER ANSI Y14.5-2009

TITLE: ELECTRICAL SCHEMATIC SAN FRANCISCO

SIZE D | DWG No. 1046646 | REV 1 | SHT 20 OF 51 | SCALE 1"0"=1"0" | DO NOT SCALE

DRAWN BY P.BRENNAN DATE 3/6/2012
CHECKED BY/ENGINEER P.BRENNAN CHECKED DESIGN 3/6/2012
WEIGHT TOTAL
APPROVED BY D.HOBBS DATE 3/6/2012

Robbins

www.TheRobbinsCompany.com

1046646

PROPRIETARY NOTICE: The information disclosed herein, in the ink property of Robbins Company, and shall not be reproduced in whole or part, used by or disclosed to any Company. By accepting this information, recipient agrees to not to be used in connection with any design, manufacture or sale without the written consent of Robbins Company. This material is not to be sold, and is to be returned to Robbins Company.

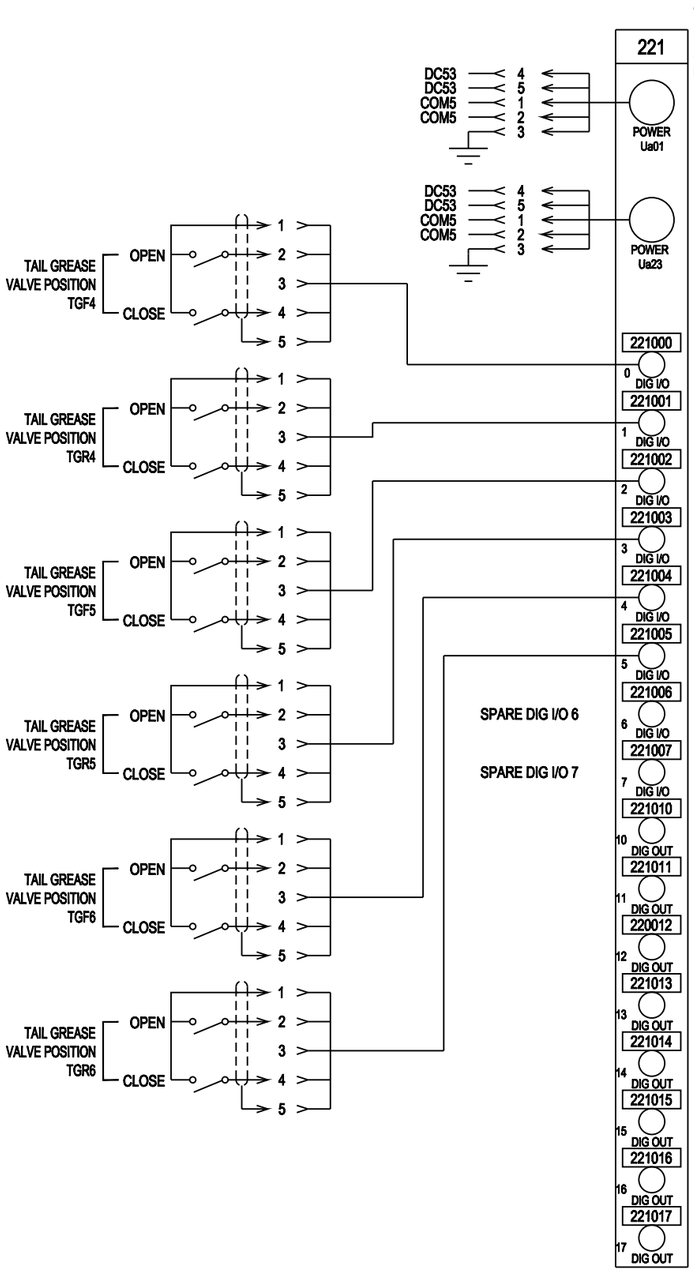

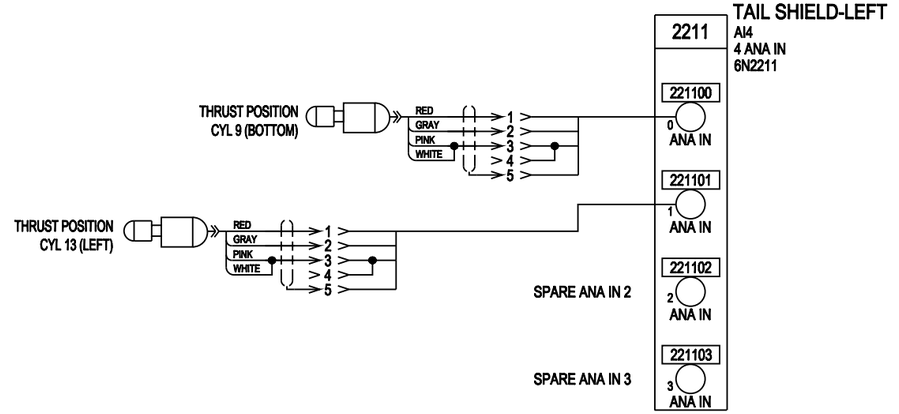

REV	DESCRIPTION	REVD BY / DATE	APPD BY / DATE
1	CHANGED SHEET NUMBER	DBS 10JUL12	D.HOBBS 10JUL12

MACHINE	NEXT ASSY
EPS2016-376	1046350
EPS2016-377	1046350

UNLESS NOTED ALL DIMS ARE Inch
TOLERANCES UNLESS NOTED
FRACTIONS/16 ± 1/64
X ± .03
XX ± .015
XXX ± .005
ANGLES ± 1°
MATERIAL
FINISH
DIMENSIONS (X) ARE REFERENCE.
ALL GEOMETRIC DIMENSIONING & TOLERANCING PER ANSI Y14.5-2009

PROPRIETARY NOTICE
This information disclosed herein, is the sole property of Robbins Company. It shall not be reproduced in whole or part, used by or disclosed to any Company. By accepting this information, recipient agrees to not to use it for any purpose other than that for which it was furnished without the prior written permission of Robbins Company. This restriction is to be construed to include all forms of reproduction, modification, distribution or publication by any means or method, in whole or in part.

ELECTRICAL SCHEMATIC SAN FRANCISCO

SIZE	DWG No.	REV	SHT	SCALE
D	1046646	1	21 of 51	1"0"=1"0" DO NOT SCALE

DRAWN BY	DESIGNED BY ENGINEER
P.BRENNAN	P.BRENNAN
DATE 3/6/2012	CHECKED DESIGN 3/6/2012
WEIGHT TOOL	APPROVED BY D.HOBBS
	DATE 3/6/2012

Robbins
www.TheRobbinsCompany.com

1046646

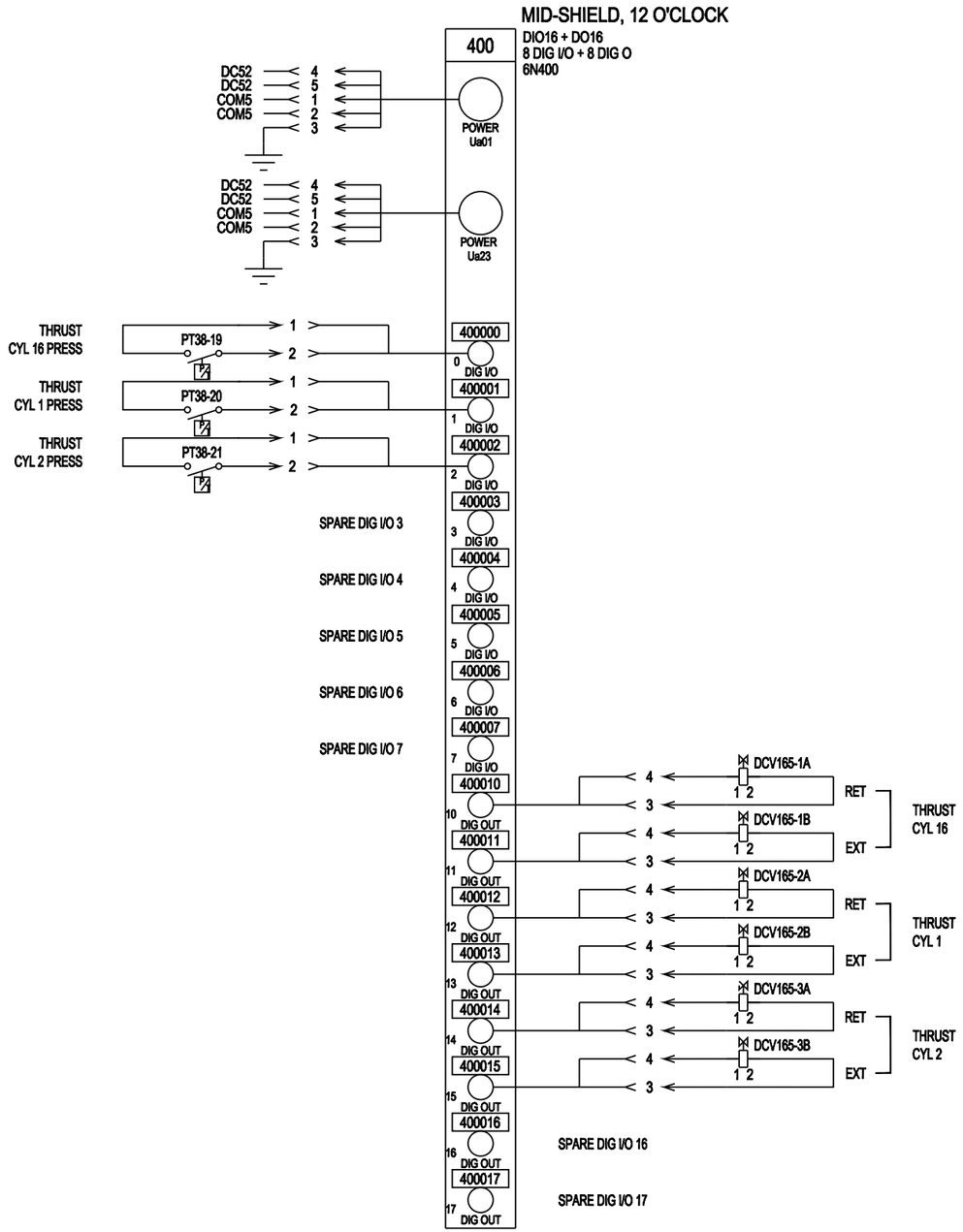

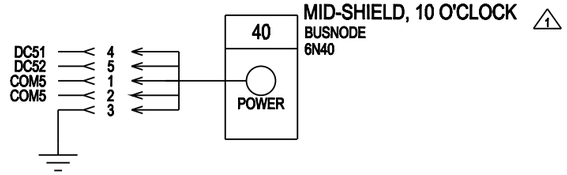

REV	DESCRIPTION	DBS 10JUL12 REV'D BY DATE	D.HOBBS 10JUL12 APP'D BY DATE
1	CHANGED SHEET NUMBER, CHG'D POSITION OF BUS NODE		

MACHINE	NEXT ASSY
EP82016-376	1046350
EP82016-377	1046350

UNLESS NOTED ALL DIMS ARE: Inch
TOLERANCES UNLESS NOTED
FRACTIONS ± 1/16
X ± .03
XX ± .015
XXX ± .005
ANGLES ± 1°
SURFACE 125RMS
DIMENSIONS (X) ARE REFERENCE
ALL GEOMETRIC DIMENSIONING & TOLERANCING PER ANSI Y14.5-2009

PROPRIETARY NOTICE
This information disclosed herein, is the sole property of Robbins & Myers, Inc. and is not to be used, reproduced or disclosed to others except as specifically authorized in writing by the Company. By accepting this information, recipient agrees to abide by the foregoing restrictions. Unauthorized use is subject to civil and criminal penalties. This notice is not to be removed. Robbins & Myers, Inc. is a Delaware Corporation.

ELECTRICAL SCHEMATIC
SAN FRANCISCO

SIZE D | DWG No. 1046646 | REV 1 | SHT 22 OF 51 | SCALE 1"0"=1'0" DO NOT SCALE

DRAWN BY P.BRENNAN DATE 3/6/2012
CHECKED (STANDARD) P.BRENNAN CHECKED (DESIGN) 3/6/2012
WEIGHT TOTAL
APPROVED BY D.HOBBS DATE 3/6/2012

Robbins

www.TheRobbinsCompany.com

1046646

MID-SHIELD, 1 O'CLOCK

401
DIO16 + DO16
8 DIG I/O + 8 DIG O
6N401

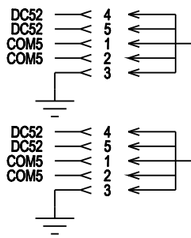

23-01		401	
23-02			
23-03			
23-04			
23-05			
23-06			
23-07			
23-08			
23-09			
23-10			
23-11		401000	
23-12	SPARE DIG I/O 0	0 DIG I/O	
23-13		401001	
23-14	SPARE DIG I/O 1	1 DIG I/O	
23-15		401002	
23-16	SPARE DIG I/O 2	2 DIG I/O	
23-17		401003	
23-18	SPARE DIG I/O 3	3 DIG I/O	
23-19		401004	
23-20	SPARE DIG I/O 4	4 DIG I/O	
23-21		401005	
23-22	SPARE DIG I/O 5	5 DIG I/O	
23-23		401006	
23-24	SPARE DIG I/O 6	6 DIG I/O	
23-25		401007	
23-26	SPARE DIG I/O 7	7 DIG I/O	
23-27		401010	
23-28		10 DIG OUT	SPARE DIG I/O 10
23-29		401011	
23-30		11 DIG OUT	SPARE DIG I/O 11
23-31		401012	
23-32		12 DIG OUT	SPARE DIG I/O 12
23-33		401013	
23-34		13 DIG OUT	SPARE DIG I/O 13
23-35		401014	
23-36		14 DIG OUT	SPARE DIG I/O 14
23-37		401015	
23-38		15 DIG OUT	SPARE DIG I/O 15
23-39		401016	
23-40		16 DIG OUT	SPARE DIG I/O 16
23-41		401017	
23-42		17 DIG OUT	SPARE DIG I/O 17
23-43			
23-44			
23-45			

23-46	
23-47	
23-48	
23-49	
23-50	
23-51	
23-52	
23-53	
23-54	
23-55	
23-56	
23-57	
23-58	
23-59	
23-60	
23-61	
23-62	
23-63	
23-64	
23-65	
23-66	
23-67	
23-68	
23-69	
23-70	
23-71	
23-72	
23-73	
23-74	
23-75	
23-76	
23-77	
23-78	
23-79	
23-80	
23-81	
23-82	
23-83	
23-84	
23-85	
23-86	
23-87	
23-88	
23-89	
23-90	

1046646

REV	DESCRIPTION	REV'D BY / DATE	APP'D BY / DATE
1	CHANGED SHEET NUMBER	DBS 10JUL12	D.HOBBS 10JUL12

MACHINE	NEXT ASSY
EPB2016-376	1046350
EPB2016-377	1046350

UNLESS NOTED ALL DIMS ARE: Inch
TOLERANCES UNLESS NOTED
0 - 1' ± 1/16
1' - 2' ± 1/8
2' - 20' ± 1/4
20' + ± 1/2
FRACTIONS ± 1/64
X ± .03
XX ± .015
XXX ± .005
ANGLES ± 1°
SURFACE FINISH 125
THIRD ANGLE PROJECTION
DIMENSIONS (X) ARE REFERENCE.
ALL GEOMETRIC DIMENSIONING & TOLERANCING PER ANSI Y14.5-2009

PROPRIETARY NOTICE
This information disclosed herein, is the sole property of Robbins Company and is not to be used by or disclosed to others for any purpose except as specifically authorized in writing by Robbins Company. By accepting this information, recipient agrees to protect the information from loss, theft or unauthorized use and to return it to Robbins Company upon request. This notice is not to be construed as a limitation or restriction on anyone's right to use information that is in the recipient's possession prior to receipt from Robbins Company or that is subsequently obtained by the recipient from a person who has lawfully possessed such information without restriction and who has not been under any obligation of confidentiality with respect to such information.

ELECTRICAL SCHEMATIC
SAN FRANCISCO

SIZE	DWG No.	REV	SHT	SCALE
D	1046646	1	23 of 51	1"0"=1"0" DO NOT SCALE

DRAWN BY	CHECKED BY/ENGINEER
P.BRENNAN	P.BRENNAN
DATE 3/6/2012	CHECKED 3/6/2012
WEIGHT TOTAL	APPROVED BY D.HOBBS
	DATE 3/6/2012

Robbins

www.TheRobbinsCompany.com

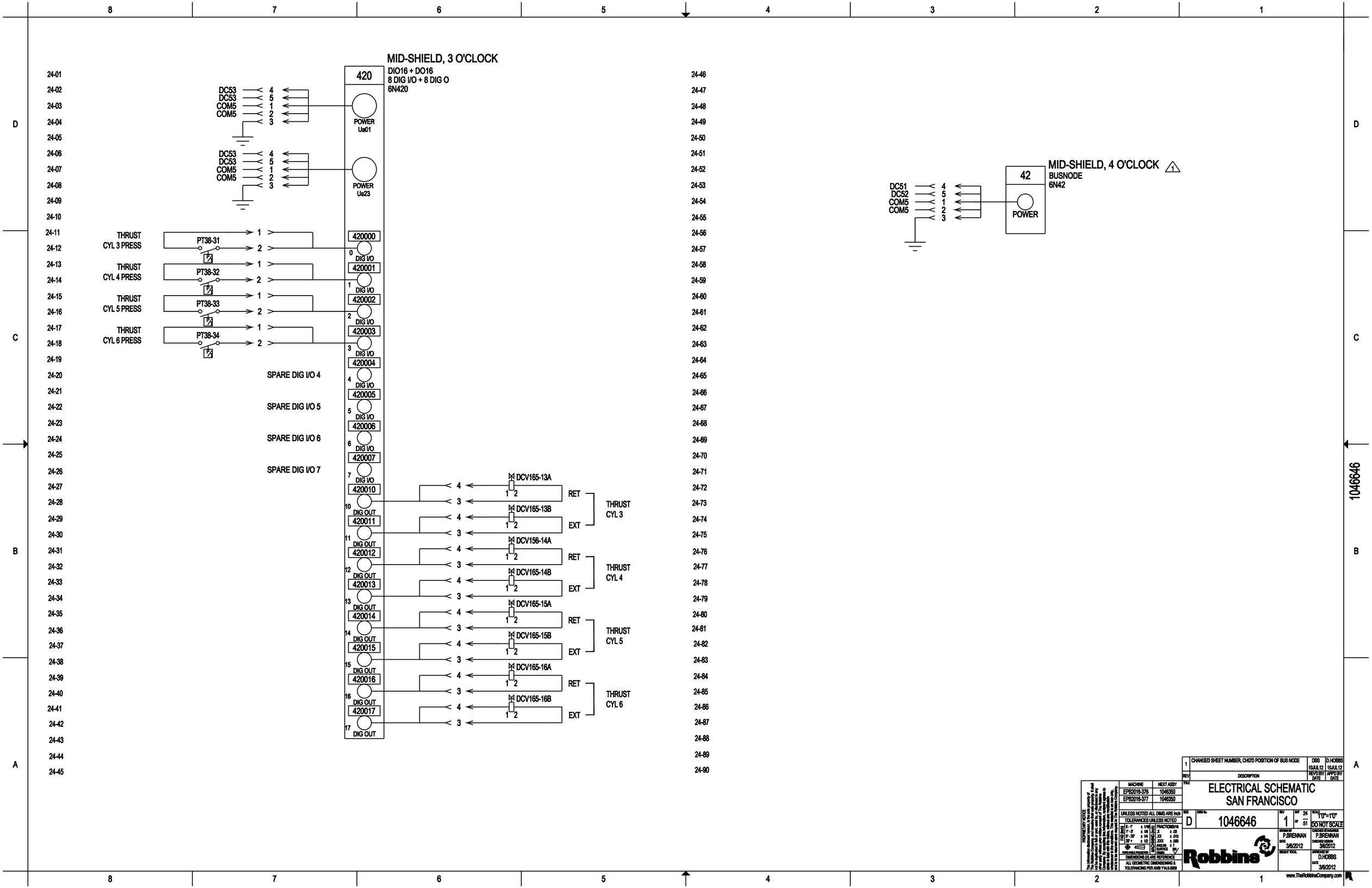
MID-SHIELD, 3 O'CLOCK
420
DIO16 + DO16
8 DIG I/O + 8 DIG O
6N420
POWER
Ua01
POWER
Ua23
DC53
DC53
COM5
COM5
THRUST
CYL 3 PRESS
THRUST
CYL 4 PRESS
THRUST
CYL 5 PRESS
THRUST
CYL 6 PRESS
PT38-31
PT38-32
PT38-33
PT38-34
420000
420001
420002
420003
420004
420005
420006
420007
420010
420011
420012
420013
420014
420015
420016
420017
DIG I/O
DIG OUT
SPARE DIG I/O 4
SPARE DIG I/O 5
SPARE DIG I/O 6
SPARE DIG I/O 7
DCV165-13A
DCV165-13B
DCV156-14A
DCV165-14B
DCV165-15A
DCV165-15B
DCV165-16A
DCV165-16B
RET
EXT
THRUST
CYL 3
THRUST
CYL 4
THRUST
CYL 5
THRUST
CYL 6
MID-SHIELD, 4 O'CLOCK
42
BUSNODE
6N42
POWER
DC51
DC52
COM5
COM5
1046646
1
CHANGED SHEET NUMBER, CHG'D POSITION OF BUS NODE
DBS 10JUL12
D.HOBBS 10JUL12
REV
DESCRIPTION
REV'D BY DATE
APP'D BY DATE
TITLE
ELECTRICAL SCHEMATIC
SAN FRANCISCO
SIZE D
DWG No. 1046646
REV 1
SHT 24 OF 51
SCALE 1"0"=1'0"
DO NOT SCALE
DRAWN BY P.BRENNAN
DATE 3/6/2012
CHECKED STANDARDS P.BRENNAN
CHECKED DESIGN 3/6/2012
WEIGHT TOTAL
APPROVED BY D.HOBBS
DATE 3/6/2012
MACHINE
NEXT ASSY
EPB2016-376
1046350
EPB2016-377
1046350
UNLESS NOTED ALL DIMS ARE inch
TOLERANCES UNLESS NOTED
FRACTIONS/Ø16
.X ± .03
.XX ± .015
.XXX ± .005
ANGLES ± 1
SURFACE 125
FINISH
DIMENSIONS (X) ARE REFERENCE
ALL GEOMETRIC DIMENSIONING & TOLERANCING PER ANSI Y14.5-2009
Robbins
www.TheRobbinsCompany.com

MID-SHIELD, 4 O'CLOCK

421
DIO16 + DO16
8 DIG I/O + 8 DIG O
6N421

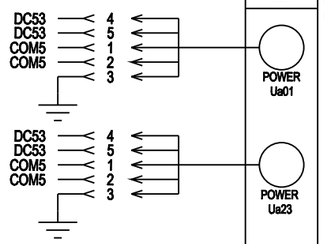

421000 — 0 DIG I/O — SPARE DIG I/O 0
421001 — 1 DIG I/O — SPARE DIG I/O 1
421002 — 2 DIG I/O — SPARE DIG I/O 2
421003 — 3 DIG I/O — SPARE DIG I/O 3
421004 — 4 DIG I/O — SPARE DIG I/O 4
421005 — 5 DIG I/O — SPARE DIG I/O 5
421006 — 6 DIG I/O — SPARE DIG I/O 6
421007 — 7 DIG I/O — SPARE DIG I/O 7

421010 — 10 DIG OUT
421011 — 11 DIG OUT — SPARE DIG I/O 12
421012 — 12 DIG OUT
421013 — 13 DIG OUT — SPARE DIG I/O 13
421014 — 14 DIG OUT — SPARE DIG I/O 14
421015 — 15 DIG OUT — SPARE DIG I/O 15
421016 — 16 DIG OUT — SPARE DIG I/O 16
421017 — 17 DIG OUT — SPARE DIG I/O 17

25-01 25-02 25-03 25-04 25-05 25-06 25-07 25-08 25-09 25-10 25-11 25-12 25-13 25-14 25-15 25-16 25-17 25-18 25-19 25-20 25-21 25-22 25-23 25-24 25-25 25-26 25-27 25-28 25-29 25-30 25-31 25-32 25-33 25-34 25-35 25-36 25-37 25-38 25-39 25-40 25-41 25-42 25-43 25-44 25-45

25-46 25-47 25-48 25-49 25-50 25-51 25-52 25-53 25-54 25-55 25-56 25-57 25-58 25-59 25-60 25-61 25-62 25-63 25-64 25-65 25-66 25-67 25-68 25-69 25-70 25-71 25-72 25-73 25-74 25-75 25-76 25-77 25-78 25-79 25-80 25-81 25-82 25-83 25-84 25-85 25-86 25-87 25-88 25-89 25-90

REV	DESCRIPTION	REV'D BY / DATE	APP'D BY / DATE
1	CHANGED SHEET NUMBER	DBS 10JUL12	D.HOBBS 10JUL12

MACHINE	NEXT ASSY
EP82016-376	1046350
EP82016-377	1046350

UNLESS NOTED ALL DIMS ARE: Inch
TOLERANCES UNLESS NOTED
0 - 1" ± 1/16
1" - 2" ± 1/8
2" - 5" ± 1/4
5" + ± 1/2
FRACTIONS ± 1/16
X ± .03
XX ± .015
XXX ± .005
ANGLES ± 1°
SURFACE 125RMS
DIMENSIONS (X) ARE REFERENCE
ALL GEOMETRIC DIMENSIONING & TOLERANCING PER ANSI Y14.5-2009

PROPRIETARY NOTICE
This information disclosed herein, is the sole property of Robbins Company. Any reproduction in part or as a whole without the written permission of Robbins Company is prohibited. This drawing is loaned subject to the agreement that it will not be used in any manner detrimental to the interests of Robbins Company. By accepting this information, recipient agrees to return it upon demand and to refrain from copying it or making it available to unauthorized persons. This drawing is not to be used for any purpose not expressly permitted by written authorization from Robbins Company. The software licensed to Robbins Company.

ELECTRICAL SCHEMATIC SAN FRANCISCO

SIZE	DWG No.	REV	SHT	SCALE
D	1046646	1	25 of 51	1"0"=1'0" DO NOT SCALE

DRAWN BY: P.BRENNAN — DATE: 3/6/2012
CHECKED DESIGNER: P.BRENNAN — CHECKED DESIGN: 3/6/2012
WEIGHT TOTAL:
APPROVED BY: D.HOBBS — DATE: 3/6/2012

Robbins

www.TheRobbinsCompany.com

1046646

MID-SHIELD, 4 O'CLOCK

422
DIO16 + DO16
8 DIG I/O + 8 DIG O
6N422

DC53 4
DC53 5
COM5 1
COM5 2
3

POWER
Ua01

DC53 4
DC53 5
COM5 1
COM5 2
3

POWER
Ua23

422000 — 0 DIG I/O — SPARE DIG I/O 0
422001 — 1 DIG I/O — SPARE DIG I/O 1
422002 — 2 DIG I/O — SPARE DIG I/O 2
422003 — 3 DIG I/O — SPARE DIG I/O 3

422004 — 4 DIG I/O — DCV153-7 (4, 3; 1, 2) — ARTIC CYLS 10, 1 FLOAT
422005 — 5 DIG I/O — DCV153-8 (4, 3; 1, 2) — ARTIC CYL 2 FLOAT
422006 — 6 DIG I/O — DCV160-2A (4, 3; 1, 2) — RET
422007 — DIG I/O — DCV160-2B (4, 3; 1, 2) — EXT
ARTICULATION CYLINDERS 10, 1 (TOP)

422010 — 7 DIG I/O — DCV160-3A (4, 3; 1, 2) — RET
422011 — 10 DIG OUT — DCV160-3B (4, 3; 1, 2) — EXT
ARTICULATION CYLINDER 2 (UPPER RIGHT)

422012 — 11 DIG OUT — DCV160-5A (4, 3; 1, 2) — RET
422013 — 12 DIG OUT — DCV160-5B (4, 3; 1, 2) — EXT
ARTICULATION CYLINDER 4 (LOWER RIGHT)

422014 — 13 DIG OUT — DCV160-4A (4, 3; 1, 2) — RET
422015 — 14 DIG OUT — DCV160-4B (4, 3; 1, 2) — EXT
ARTICULATION CYLINDER 3 (MIDDLE RIGHT)

422016 — 15 DIG OUT — DCV153-4 (4, 3; 1, 2) — ARTIC CYL 4 FLOAT
422017 — 16 DIG OUT — DCV153-3 (4, 3; 1, 2) — ARTIC CYL 3 FLOAT
17 DIG OUT

MID-SHIELD, 4 O'CLOCK

4221
AI4
4 ANA IN
6N4221

PT38-15 — ARTIC CYLS 10,1 PRESSURE 0-400bar — 422100 — 0 ANA IN
PT38-16 — ARTIC CYL 2 PRESSURE 0-400bar — 422101 — 1 ANA IN
PT38-12 — ARTIC CYL 4 PRESSURE 0-400bar — 422102 — 2 ANA IN
PT38-11 — ARTIC CYL 3 PRESSURE 0-400bar — 422103 — 3 ANA IN

REV	DESCRIPTION	DBS 10JUL12 REV'D BY	D.HOBBS 10JUL12 APP'D BY DATE
1	CHANGED SHEET NUMBER		

MACHINE	NEXT ASSY
EP62016-376	1046350
EP62016-377	1046350

UNLESS NOTED ALL DIMS ARE Inch
TOLERANCES UNLESS NOTED
0 - 1" ± 1/16 | FRACTIONS ±1/16
1" - 3" ± 1/8 | .X ± .03
3" - 20" ± 1/4 | .XX ± .015
20" + ± 1/2 | .XXX ± .005
ANGLES ± 1
SURFACE 125
DIMENSIONS (X) ARE REFERENCE
ALL GEOMETRIC DIMENSIONING & TOLERANCING PER ANSI Y14.5-2009

TITLE: ELECTRICAL SCHEMATIC SAN FRANCISCO

SIZE D | DWG No. 1046646 | REV 1 | SHT 26 OF 51 | SCALE 1"0"=1"0" DO NOT SCALE

DRAWN BY P.BRENNAN DATE 3/6/2012
CHECKED BY/DRAWER P.BRENNAN CHECKED DESIGNER 3/6/2012
WEIGHT/VOLUME
APPROVED BY D.HOBBS DATE 3/6/2012

Robbins — www.TheRobbinsCompany.com

1046646

PROPRIETARY NOTICE
The information disclosed herein, is the sole property of The Robbins Company and is not to be used by or disclosed to others for any purpose without the written permission of The Robbins Company. By accepting this information, recipient agrees to protect it as confidential and to return it upon request. Under no circumstances, may this material be used in any way detrimental to the interests of The Robbins Company.

MID-SHIELD, 6 O'CLOCK

440
DIO16 + DO16
8 DIG I/O + 8 DIG O
6N440

DC62 4
DC62 5
COM6 1
COM6 2
3

POWER
Ua01

DC62 4
DC62 5
COM6 1
COM6 2
3

POWER
Ua23

THRUST CYL 7 PRESS — PT38-22 — 1, 2 — 440000 — 0 DIG I/O
THRUST CYL 8 PRESS — PT38-23 — 1, 2 — 440001 — 1 DIG I/O
THRUST CYL 9 PRESS — PT38-24 — 1, 2 — 440002 — 2 DIG I/O
THRUST CYL 10 PRESS — PT38-25 — 1, 2 — 440003 — 3 DIG I/O
THRUST CYL 11 PRESS — PT38-26 — 1, 2 — 440004 — 4 DIG I/O

440005 — 5 DIG I/O — SPARE DIG I/O 5

440006 — 6 DIG I/O — DCV165-4A (4, 3, 1 2) — RET
440007 — 7 DIG I/O — DCV165-4B (4, 3, 1 2) — EXT
THRUST CYL 7

440010 — 10 DIG OUT — DCV165-5A (4, 3, 1 2) — RET
440011 — 11 DIG OUT — DCV165-5B (4, 3, 1 2) — EXT
THRUST CYL 8

440012 — 12 DIG OUT — DCV165-6A (4, 3, 1 2) — RET
440013 — 13 DIG OUT — DCV165-6B (4, 3, 1 2) — EXT
THRUST CYL 9

440014 — 14 DIG OUT — DCV165-7A (4, 3, 1 2) — RET
440015 — 15 DIG OUT — DCV165-7B (4, 3, 1 2) — EXT
THRUST CYL 10

440016 — 16 DIG OUT — DCV165-8A (4, 3, 1 2) — RET
440017 — 17 DIG OUT — DCV165-11B (4, 3, 1 2) — EXT
THRUST CYL 11

MID-SHIELD, 7 O'CLOCK ⚠1

DC61 4
DC62 5
COM6 1
COM6 2
3

44
BUSNODE
6N44

POWER

1046646

REV	DESCRIPTION	DRS	D.HOBBS
1	CHANGED SHEET NUMBER, CHG'D POSITION OF BUS NODE	10JUL12 REV'D BY DATE	10JUL12 APP'D BY DATE

TITLE: ELECTRICAL SCHEMATIC SAN FRANCISCO

MACHINE	NEXT ASSY
EPB2016-376	1046350
EPB2016-377	1046350

UNLESS NOTED ALL DIMS ARE: Inch
TOLERANCES UNLESS NOTED
0 - 1" ± 1/16
1" - 2" ± 1/8
2" - 20" ± 1/4
20" + ± 1/2
FRACTIONS ± 1/64
X ± .03
XX ± .015
XXX ± .005
ANGLES ± 1°
SURFACE 125RMS
IMPERIAL PROJECTION
DIMENSIONS (X) ARE REFERENCE
ALL GEOMETRIC DIMENSIONING & TOLERANCING PER ANSI Y14.5-2009

SIZE D | DWG No. 1046646 | REV 1 | SHT 27 OF 51 | SCALE 1"0"=1'0" | DO NOT SCALE
DRAWN BY P.BRENNAN DATE 3/6/2012
CHECKED DRAWING P.BRENNAN CHECKED DESIGN 3/6/2012
WEIGHT TOTAL
APPROVED BY D.HOBBS DATE 3/6/2012

Robbins
www.TheRobbinsCompany.com

PROPRIETARY NOTICE
This information disclosed herein, is the sole property of The Robbins Company and is not to be used by or disclosed to others for any purpose except as specifically authorized in writing by The Robbins Company. By accepting this information, recipient agrees to exercise due care in preventing the unauthorized use of it. Except as otherwise specifically agreed in writing, it is only transmitted for limited use, and in no event may it be used for the benefit of any third party without the express written consent of The Robbins Company. (c) 1997 (thru) 2012 The Robbins Company

MID-SHIELD, 7 O'CLOCK

441
DIO16 + DO16
8 DIG I/O + 8 DIG O
6N441

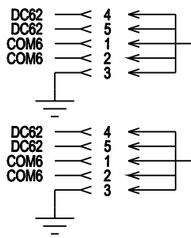

28-01		441	
28-02			
28-03			
28-04			
28-05			
28-06			
28-07			
28-08			
28-09			
28-10			
28-11		441000	
28-12	SPARE DIG I/O 0	0 DIG I/O	
28-13		441001	
28-14	SPARE DIG I/O 1	1 DIG I/O	
28-15		441002	
28-16	SPARE DIG I/O 2	2 DIG I/O	
28-17		441003	
28-18	SPARE DIG I/O 3	3 DIG I/O	
28-19		441004	
28-20	SPARE DIG I/O 4	4 DIG I/O	
28-21		441005	
28-22	SPARE DIG I/O 5	5 DIG I/O	
28-23		441006	
28-24	SPARE DIG I/O 6	6 DIG I/O	
28-25		441007	
28-26	SPARE DIG I/O 7	7 DIG I/O	
28-27		441010	
28-28		10 DIG OUT	SPARE DIG OUT 10
28-29		441011	
28-30		11 DIG OUT	SPARE DIG OUT 11
28-31		441012	
28-32		12 DIG OUT	SPARE DIG OUT 12
28-33		441013	
28-34		13 DIG OUT	SPARE DIG OUT 13
28-35		441014	
28-36		14 DIG OUT	SPARE DIG OUT 14
28-37		441015	
28-38		15 DIG OUT	SPARE DIG OUT 15
28-39		441016	
28-40		16 DIG OUT	SPARE DIG OUT 16
28-41		441017	
28-42		17 DIG OUT	SPARE DIG OUT 17
28-43			
28-44			
28-45			

28-46	
28-47	
28-48	
28-49	
28-50	
28-51	
28-52	
28-53	
28-54	
28-55	
28-56	
28-57	
28-58	
28-59	
28-60	
28-61	
28-62	
28-63	
28-64	
28-65	
28-66	
28-67	
28-68	
28-69	
28-70	
28-71	
28-72	
28-73	
28-74	
28-75	
28-76	
28-77	
28-78	
28-79	
28-80	
28-81	
28-82	
28-83	
28-84	
28-85	
28-86	
28-87	
28-88	
28-89	
28-90	

PROPRIETARY NOTICE
This information disclosed herein is the sole property of Robbins Company. Any reproduction in part or as a whole without the written permission of Robbins Company is prohibited. By accepting this information, recipient agrees to return it to Robbins Company upon request and to not duplicate or disclose it without permission from Robbins Company. In the event of conflict between this notice and any state law, the law that provides the most protection to Robbins Company shall govern.

MACHINE	NEXT ASSY
EPB2016-376	1046350
EPB2016-377	1046350

UNLESS NOTED ALL DIMS ARE: Inch
TOLERANCES UNLESS NOTED
0 - 1' ± 1/16
1' - 2' ± 1/8
2' - 20' ± 1/4
20' + ± 1/2
FRACTIONS ± 1/64
X ± .03
XX ± .015
XXX ± .005
ANGLES ± 1°
SURFACE 125
FINISH
DIMENSIONS (X) ARE REFERENCE
ALL GEOMETRIC DIMENSIONING & TOLERANCING PER ANSI Y14.5-2009

REV	DESCRIPTION	DBS 10JUL12	D.HOBBS 10JUL12
1	CHANGED SHEET NUMBER	REVD BY DATE	APPD BY DATE

TITLE: ELECTRICAL SCHEMATIC SAN FRANCISCO

SIZE D | DWG No. 1046646 | REV 1 | SHT 28 OF 51 | SCALE 1"0"=1'0" | DO NOT SCALE

DRAWN BY P.BRENNAN DATE 3/6/2012
CHECKED DESIGNER P.BRENNAN CHECKED DESIGNER 3/6/2012
WEIGHT TOTAL
APPROVED BY D.HOBBS DATE 3/6/2012

Robbins

www.TheRobbinsCompany.com

1046646

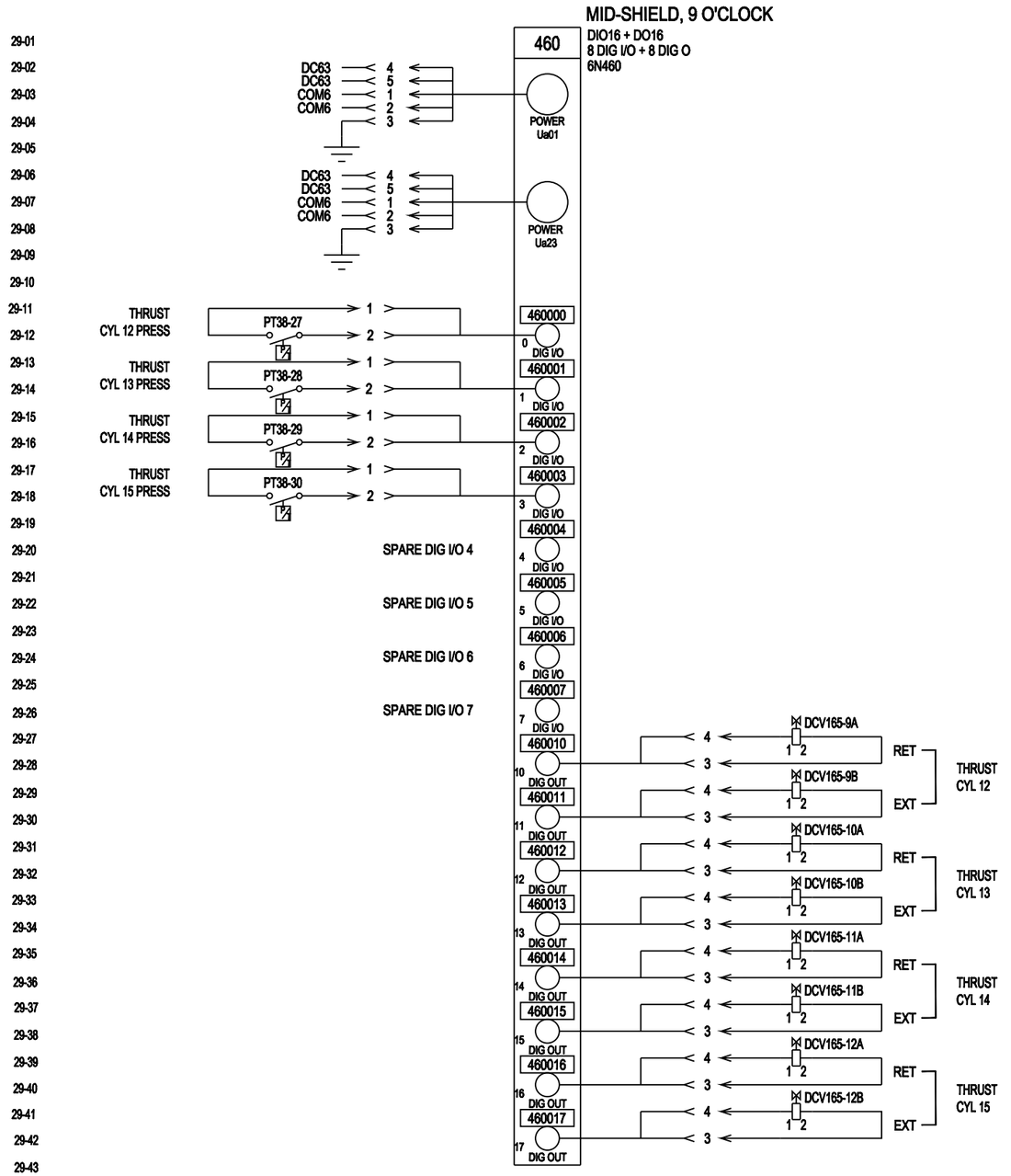

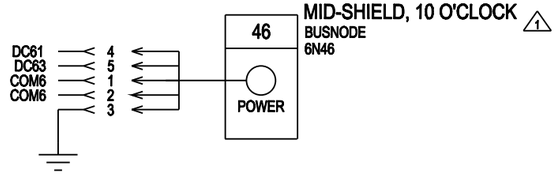

REV	DESCRIPTION	DRS / REV'D BY DATE	D.HOBBS / APP'D BY DATE
1	CHANGED SHEET NUMBER, CHG'D POSITION OF BUS NODE	10JUL12	10JUL12

MACHINE	NEXT ASSY
EP82016-376	1046350
EP82016-377	1046350

UNLESS NOTED ALL DIMS ARE: Inch

TOLERANCES UNLESS NOTED

FRACTIONS	
X	± .03
XX	± .015
XXX	± .005
ANGLES	± 1°
SURFACE FINISH	125

DIMENSIONS (X) ARE REFERENCE.

ALL GEOMETRIC DIMENSIONING & TOLERANCING PER ANSI Y14.5-2009

PROPRIETARY NOTICE

This information disclosed herein, is the sole property of Robbins Company and is not to be used, reproduced or disclosed to others except as specifically authorized in writing by Robbins Company. By accepting this information, recipient agrees to abide by the foregoing restrictions. Recipient agrees to return this information to Robbins Company upon request and agrees to destroy it in accordance with any applicable document retention and destruction policy. This notice is not to be removed. This notice is to be construed in accordance with the laws of the State of California.

TITLE: ELECTRICAL SCHEMATIC SAN FRANCISCO

SIZE	DWG No.	REV	SHT	SCALE
D	1046646	1	29 of 51	1"0"=1'0"

DO NOT SCALE

DRAWN BY	CHECKED BY/ENGINEER
P.BRENNAN	P.BRENNAN
DATE: 3/6/2012	CHECKED DESIGN: 3/6/2012
WEIGHT TOTAL:	APPROVED BY: D.HOBBS
	DATE: 3/6/2012

Robbins

www.TheRobbinsCompany.com

1046646

30-01
30-02
30-03
30-04
30-05
30-06
30-07
30-08
30-09
30-10
30-11
30-12
30-13
30-14
30-15
30-16
30-17
30-18
30-19
30-20
30-21
30-22
30-23
30-24
30-25
30-26
30-27
30-28
30-29
30-30
30-31
30-32
30-33
30-34
30-35
30-36
30-37
30-38
30-39
30-40
30-41
30-42
30-43
30-44
30-45

30-46
30-47
30-48
30-49
30-50
30-51
30-52
30-53
30-54
30-55
30-56
30-57
30-58
30-59
30-60
30-61
30-62
30-63
30-64
30-65
30-66
30-67
30-68
30-69
30-70
30-71
30-72
30-73
30-74
30-75
30-76
30-77
30-78
30-79
30-80
30-81
30-82
30-83
30-84
30-85
30-86
30-87
30-88
30-89
30-90

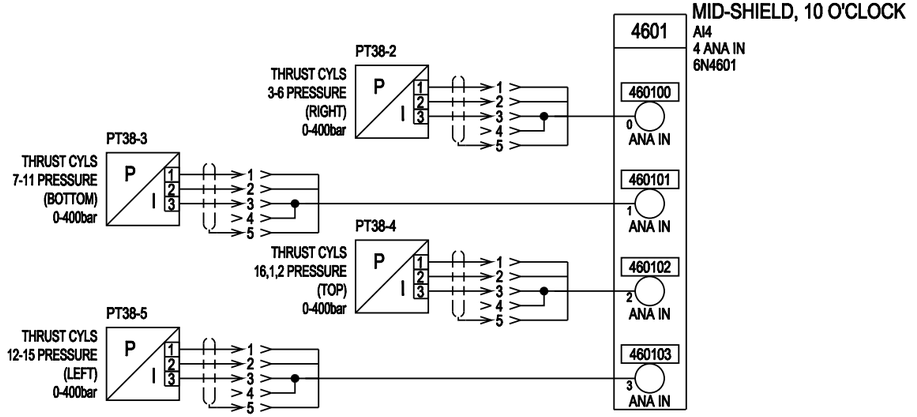

REV	DESCRIPTION	REVD BY/ DATE	APPD BY/ DATE
1	CHANGED SHEET NUMBER	DBS 10JUL12	D.HOBBS 10JUL12

MACHINE	NEXT ASSY
EPB2016-376	1046350
EPB2016-377	1046350

UNLESS NOTED ALL DIMS ARE inch
TOLERANCES UNLESS NOTED
1" - 1' ± 1/16 | FRACTIONS ± 1/8
1' - 2' ± 1/8 | .X ± .03
2' - 20' ± 1/4 | .XX ± .015
20'+ ± 1/2 | .XXX ± .005
ANGLES ± 1°
SURFACE FINISH
DIMENSIONS (X) ARE REFERENCE
ALL GEOMETRIC DIMENSIONING & TOLERANCING PER ANSI Y14.5-2009

TITLE: ELECTRICAL SCHEMATIC SAN FRANCISCO

SIZE D | DWG No. 1046646 | REV 1 | SHT 30 OF 51 | SCALE 1"0"=1'0" DO NOT SCALE

DRAWN BY P.BRENNAN DATE 3/6/2012
CHECKED BY/ENGINEER P.BRENNAN CHECKED ENGINEER 3/6/2012
WEIGHT TOTAL
APPROVED BY D.HOBBS DATE 3/6/2012

Robbins

www.TheRobbinsCompany.com

1046646

PROPRIETARY NOTICE
The information disclosed hereon, is the sole property of The Robbins Company and is not to be used, reproduced or disclosed in any manner, in whole or in part, except by or on behalf of the Company, by accepting this information, recipient agrees to abide by the foregoing restrictions. This notice is not to be removed or altered in any manner. This notice is to be construed as a notice of copyright, whether or not registered, under the laws of the United States.

MID-SHIELD, 10 O'CLOCK

461
DIO16 + DO16
8 DIG I/O + 8 DIG O
6N461

DC63 4
DC63 5
COM6 1
COM6 2
3
POWER
Ua01

DC63 4
DC63 5
COM6 1
COM6 2
3
POWER
Ua23

461000 0 DIG I/O — SPARE DIG I/O 0
461001 1 DIG I/O — SPARE DIG I/O 1
461002 2 DIG I/O — DCV153-2 (1 2) — ARTICULATION CYLS 5, 6 FLOAT
461003 3 DIG I/O — DCV160-9A (1 2) — RET; DCV160-9B (1 2) — EXT — ARTICULATION CYLS 5, 6 (BOTTOM)
461004 4 DIG I/O — DCV160-8A (1 2) — RET; DCV160-8B (1 2) — EXT — ARTICULATION CYL 7 (LOWER LEFT)
461005 5 DIG I/O — DCV160-6A (1 2) — RET; DCV160-6B (1 2) — EXT — ARTICULATION CYL 8 (MIDDLE LEFT)
461006 6 DIG I/O — DCV153-1 (1 2) — ARTIC CYL 7 FLOAT
461007 7 DIG I/O — DCV153-5 (1 2) — ARTIC CYL 8 FLOAT
461010 10 DIG OUT — DCV160-7A (1 2) — RET; DCV160-7B (1 2) — EXT — ARTICULATION CYL 9 (UPPER LEFT)
461011 11 DIG OUT — DCV153-6 (1 2) — ARTIC CYL 9 FLOAT
460012 12 DIG OUT — DCV155-1 (1 2) — MEASUREMENT SYNC
461013 13 DIG OUT — DCV155-2 (1 2) — THRUST SYNC
461014 14 DIG OUT
461015 15 DIG OUT
461016 16 DIG OUT
461017 17 DIG OUT

MID-SHIELD, 10 O'CLOCK

4611
AI4
4 ANA IN
6N4611

PT38-18 — ARTIC CYLS 5, 6 PRESSURE 0-400bar — 461100 0 ANA IN
PT38-17 — ARTIC CYL 7 PRESSURE 0-400bar — 461101 1 ANA IN
PT38-13 — ARTIC CYL 8 PRESSURE 0-400bar — 461102 2 ANA IN
PT38-14 — ARTIC CYL 9 PRESSURE 0-400bar — 461103 3 ANA IN

REV	DESCRIPTION	DBS DATE	D.HOBBS APP'D BY/ DATE
1	CHANGED SHEET NUMBER	10JUL12	10JUL12

MACHINE	NEXT ASSY
EP82016-376	1046350
EP82016-377	1046350

UNLESS NOTED ALL DIMS ARE Inch
TOLERANCES UNLESS NOTED
0 - 1" ± 1/64 | FRACTIONS ±1/8
1" - 3" ± 1/8 | X ±.03
3" - 20" ± 1/4 | XX ±.015
20" + ± 1/2 | XXX ±.005
ANGLES ± 1°
SURFACE 125/
FIRST ANGLE PROJECTION
DIMENSIONS IN [ ] ARE REFERENCE
ALL GEOMETRIC DIMENSIONING & TOLERANCING PER ANSI Y14.5-2009

TITLE: ELECTRICAL SCHEMATIC SAN FRANCISCO
SIZE D | DWG No. 1046646 | REV 1 | SHT 31 OF 51 | SCALE 1"0"=1"0" DO NOT SCALE
DRAWN BY P.BRENNAN DATE 3/6/2012
CHECKED BY/ENGINEER P.BRENNAN CHECKED DESIGN 3/6/2012
WEIGHT/ LOCAL
APPROVED BY D.HOBBS DATE 3/6/2012

Robbins

www.TheRobbinsCompany.com

1046646

PROPRIETARY NOTICE
The information disclosed herein, in the size property of Robbins Company, and shall not be reproduced in whole or part, used by, or disclosed to any other person or entity without the written permission of the Company. By accepting this information, recipient agrees to abide by the foregoing restrictions. This notice is to be construed as a notice of publication within the meaning of 17 USC 401(b) and in the absence of any other proper notice of copyright, unauthorized publication shall not be construed as a limitation of or waiver of others of copyright or other protection of the Company.

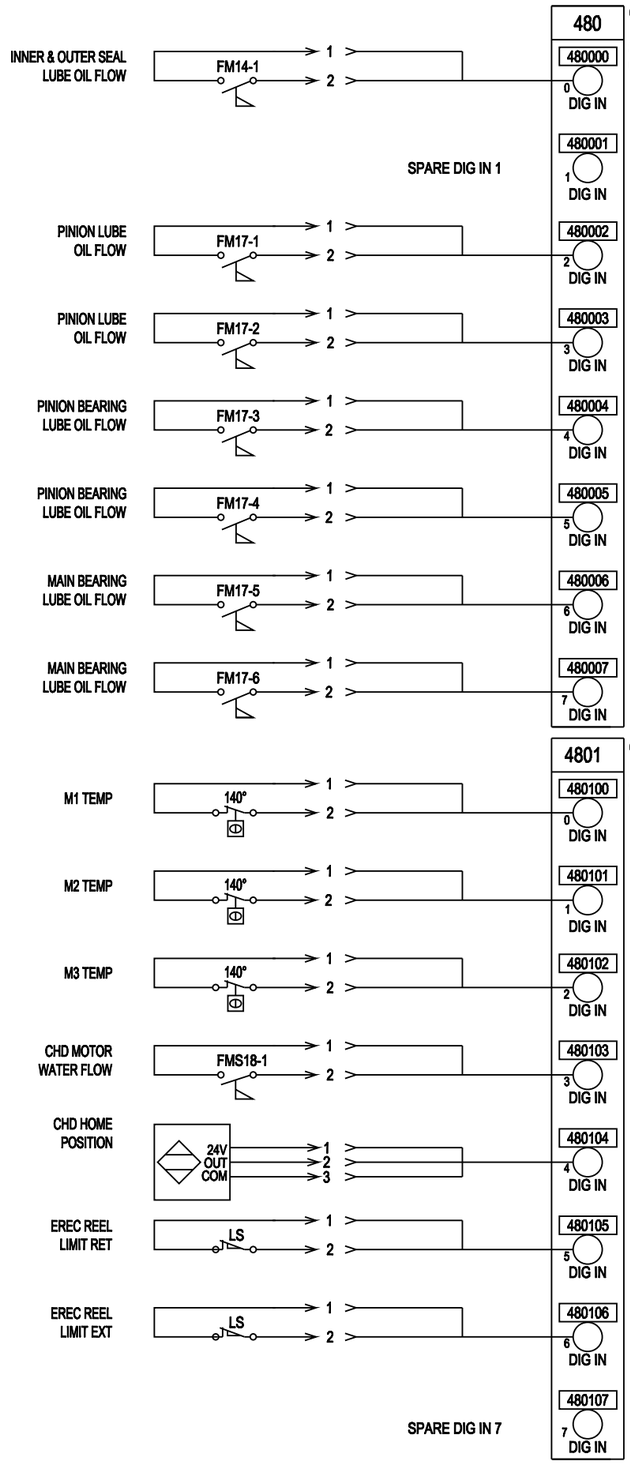

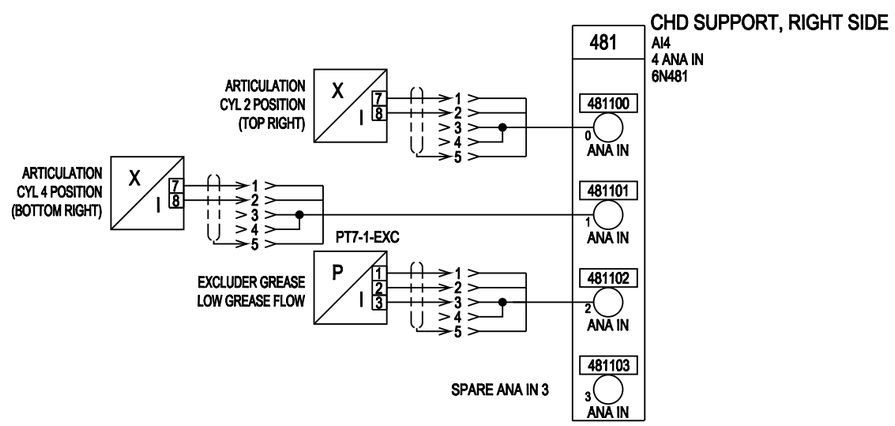

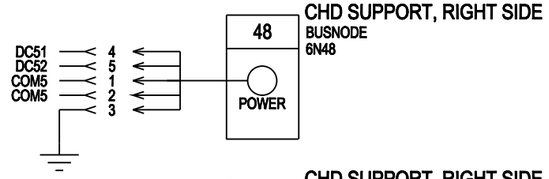

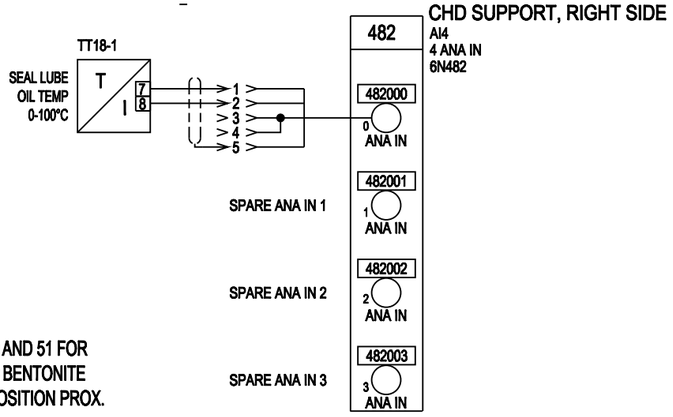

⚠1 NOTE:
SEE SHEET 50 AND 51 FOR ADDITIVE AND BENTONITE BALL VALVE POSITION PROX.

REV	DESCRIPTION	REVD BY/ DATE	APPD BY/ DATE
1	CHANGED SHEET NUMBER, ADDED NOTE	DBS 10JUL12	D.HOBBS 10JUL12

MACHINE	NEXT ASSY
EPB2016-376	1046350
EPB2016-377	1046350

UNLESS NOTED ALL DIMS ARE inch
TOLERANCES UNLESS NOTED
DIMENSIONS [X] ARE REFERENCE
ALL GEOMETRIC DIMENSIONING & TOLERANCING PER ANSI Y14.5-2009

TITLE: ELECTRICAL SCHEMATIC SAN FRANCISCO

SIZE D | DWG No. 1046646 | REV 1 | SHT 32 of 51 | SCALE 1"0"=1'0" DO NOT SCALE

DRAWN BY P.BRENNAN DATE 3/6/2012
CHECKED BY/ENGINEER P.BRENNAN CHECKED ESIGNOR 3/6/2012
WEIGHT TOTAL
APPROVED BY D.HOBBS DATE 3/6/2012

Robbins

www.TheRobbinsCompany.com

1046646

CHD SUPPORT, LEFT SIDE

490
DIO16 + DO16
8 DIG I/O + 8 DIG O
6N490

DC62 4
DC62 5
COM6 1
COM6 2
3
POWER
Ua01

DC62 4
DC62 5
COM6 1
COM6 2
3
POWER
Ua23

MAIN BEARING LUBE OIL FLOW — FM17-7 — 1 2 — 490000 — 0 DIG I/O
MAIN BEARING LUBE OIL FLOW — FM17-8 — 1 2 — 490001 — 1 DIG I/O
MAIN BEARING LUBE OIL FLOW — FM17-9 — 1 2 — 490002 — 2 DIG I/O
MAIN BEARING LUBE OIL FLOW — FM17-10 — 1 2 — 490003 — 3 DIG I/O
MAIN BEARING LUBE OIL FLOW — FM17-11 — 1 2 — 490004 — 4 DIG I/O

SPARE DIG I/O 5 — 490005 — 5 DIG I/O

490006 — 6 DIG I/O — DCV161-6A (4 / 3, 1 2) — RET
490007 — 7 DIG I/O — DCV161-6B (4 / 3, 1 2) — EXT
COPY CUTTER

490010 — 10 DIG OUT — DCV164-1 (4 / 3, 1 2) — WEAR DETECTOR BIT
490011 — 11 DIG OUT — DCV164-3 (4 / 3, 1 2) — WEAR DETECTOR BIT
490012 — 12 DIG OUT — DCV164-4 (4 / 3, 1 2) — WEAR DETECTOR PIPE

490013 — 13 DIG OUT — SPARE DIG OUT 13
490014 — 14 DIG OUT — SPARE DIG OUT 14

490015 — 15 DIG OUT — DCV18-1 (4 / 3, 1 2) — LUBE GREASE PRE-CHARGE
490016 — 16 DIG OUT — DCV18-2 (4 / 3, 1 2) — LUBE GREASE NORMAL RUN

490017 — 17 DIG OUT — SPARE DIG OUT 17

CHD SUPPORT, LEFT SIDE

4901
AI4
4 ANA IN
6N4901

PT57-1 — WEAR DETECTOR BIT PRESS — P / I (1 2 3) — 1 2 3 4 5 — 490100 — 0 ANA IN
PT57-2 — WEAR DETECTOR BIT PRESS — P / I (1 2 3) — 1 2 3 4 5 — 490101 — 1 ANA IN
PT57-3 — WEAR DETECTOR PIPE PRESS — P / I (1 2 3) — 1 2 3 4 5 — 490102 — 2 ANA IN
TT18-2 — CHD BRG LUBE OIL TEMP 0-100°C — T / I (7 8) — 1 2 3 4 5 — 490103 — 3 ANA IN

CHD SUPPORT, LEFT SIDE

49
BUSNODE
6N49

DC61 4
DC62 5
COM6 1
COM6 2
3
POWER

1046646

REV	DESCRIPTION	REVD BY DATE	APPD BY DATE
1	CHANGED SHEET NUMBER	DBS 10JUL12	D.HOBBS 10JUL12

MACHINE	NEXT ASSY
EPB2016-376	1046350
EPB2016-377	1046350

UNLESS NOTED ALL DIMS ARE: Inch
TOLERANCES UNLESS NOTED
0 - 1" ± 1/16
1" - 2" ± 1/8
2" - 20" ± 1/4
20" + ± 1/2
FRACTIONS ± 1/32
X ± .03
XX ± .015
XXX ± .005
ANGLES ± 1°
SURFACE 125
THIRD ANGLE PROJECTION
DIMENSIONS (X) ARE REFERENCE
ALL GEOMETRIC DIMENSIONING & TOLERANCING PER ANSI Y14.5-2009

TITLE: ELECTRICAL SCHEMATIC SAN FRANCISCO
SIZE D — DWG No. 1046646 — REV 1 — SHT 33 OF 51 — SCALE 1"0"=1"0" — DO NOT SCALE
DRAWN BY P.BRENNAN DATE 3/6/2012
CHECKED BY/CHECKED DESIGN P.BRENNAN 3/6/2012
WEIGHT TOTAL
APPROVED BY D.HOBBS DATE 3/6/2012

Robbins
www.TheRobbinsCompany.com

PROPRIETARY NOTICE
The information disclosed hereon is the sole property of The Robbins Company. Neither receipt nor possession thereof confers or transfers any right to reproduce or disclose it, or to manufacture or sell anything it may describe, without the prior written permission of The Robbins Company. By accepting this information, recipient agrees to use it only for the purpose for which it is furnished by The Robbins Company, to maintain it in confidence, to reproduce it only to the extent necessary for such purpose, and to return it promptly on request. (ISSUED 1/1/1999)

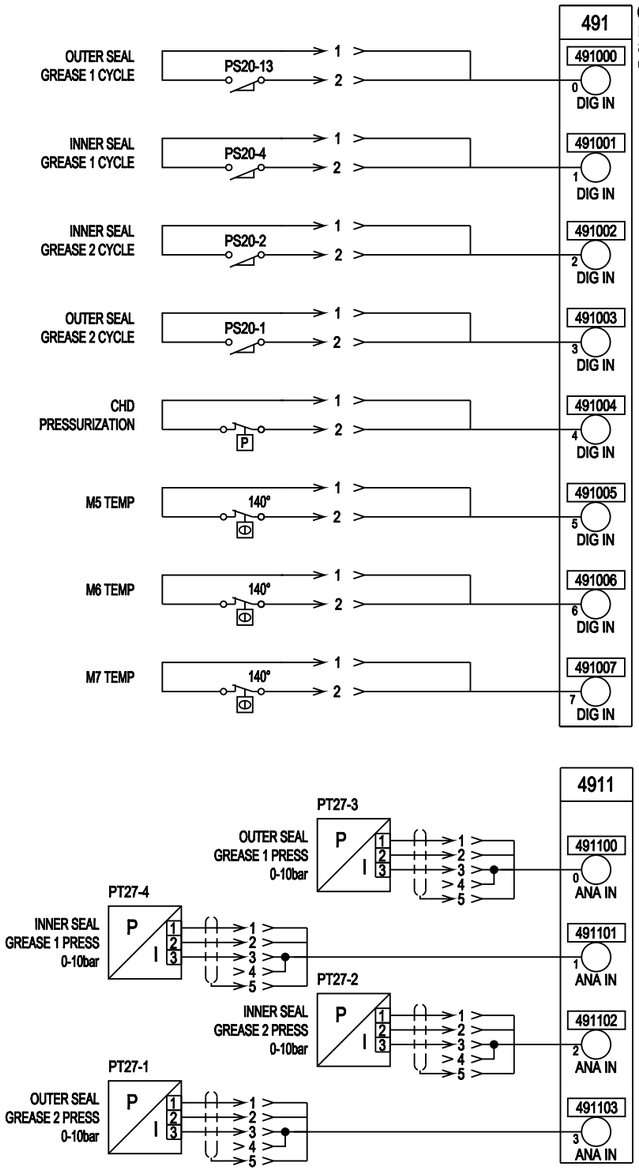

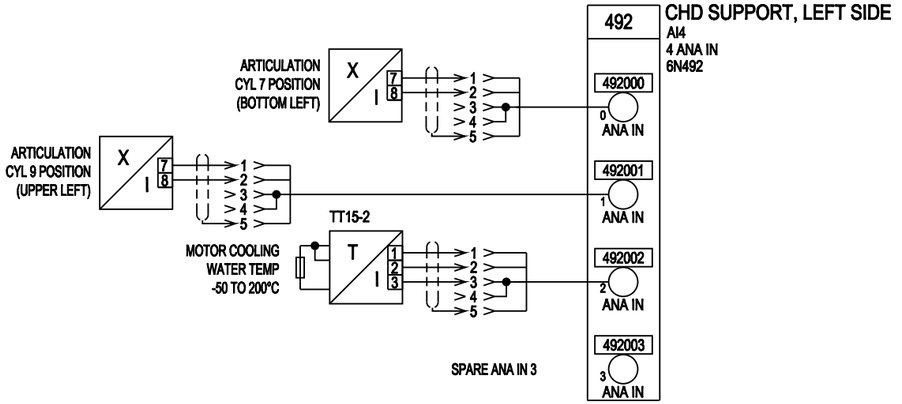

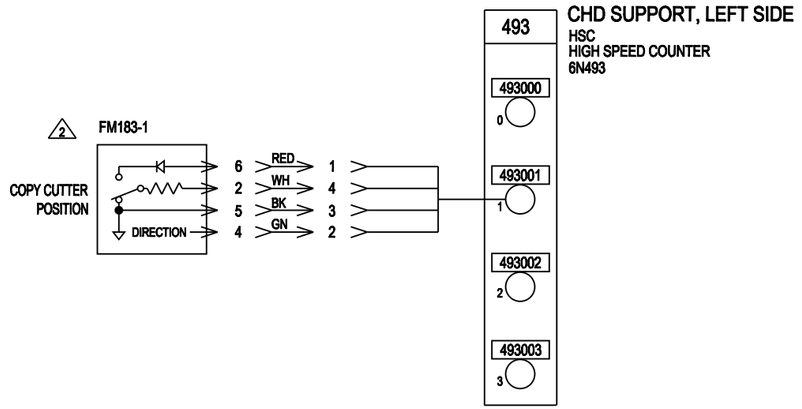

REV	DESCRIPTION	REVD BY/ DATE	APPD BY/ DATE
2	ADDED WIRE COLORS TO FM183-1	DBS 27SEP12	D.HOBBS 27SEP12
1	CHANGED SHEET NUMBER	DBS 10JUL12	D.HOBBS 10JUL12

MACHINE	NEXT ASSY
EP82016-376	1046350
EP82016-377	1046350

UNLESS NOTED ALL DIMS ARE inch
TOLERANCES UNLESS NOTED
0 - 1" ± 1/16 | FRACTIONS 1/16
1" - 2" ± 1/8 | X ± .03
2" - 20" ± 1/4 | XX ± .015
20" + ± 1/2 | XXX ± .005
ANGLES ± 1
SURFACE FINISH 250
DIMENSIONS (D) ARE REFERENCE.
ALL GEOMETRIC DIMENSIONING & TOLERANCING PER ANSI Y14.5-2009

PROPRIETARY NOTICE
This information disclosed hereon, in the sole property of Robbins Company. By accepting this information, recipient agrees to not to duplicate it in full or part, used by or disclosed to any person or entity for any purpose without the express written permission of Robbins Company. By accepting this information, recipient agrees to return it upon request of Robbins Company. This drawing is an unpublished work fully protected by the copyright laws of the United States of America (USA) (Title 17 USC Section 106). Unauthorized use, distribution or duplication is prohibited. Violators may be prosecuted to the fullest extent permitted by law. Copyright notice does not imply publication.

ELECTRICAL SCHEMATIC
SAN FRANCISCO

SIZE D | DWG No. 1046646 | REV 2 | SHT 34 OF 51 | SCALE 1"=1'0" DO NOT SCALE

DRAWN BY P.BRENNAN DATE 3/6/2012
CHECKED BY/ENGINEER P.BRENNAN CHECKED DESIGN 3/6/2012
WEIGHT TOTAL
APPROVED BY D.HOBBS DATE 3/6/2012

Robbins
www.TheRobbinsCompany.com

1046646

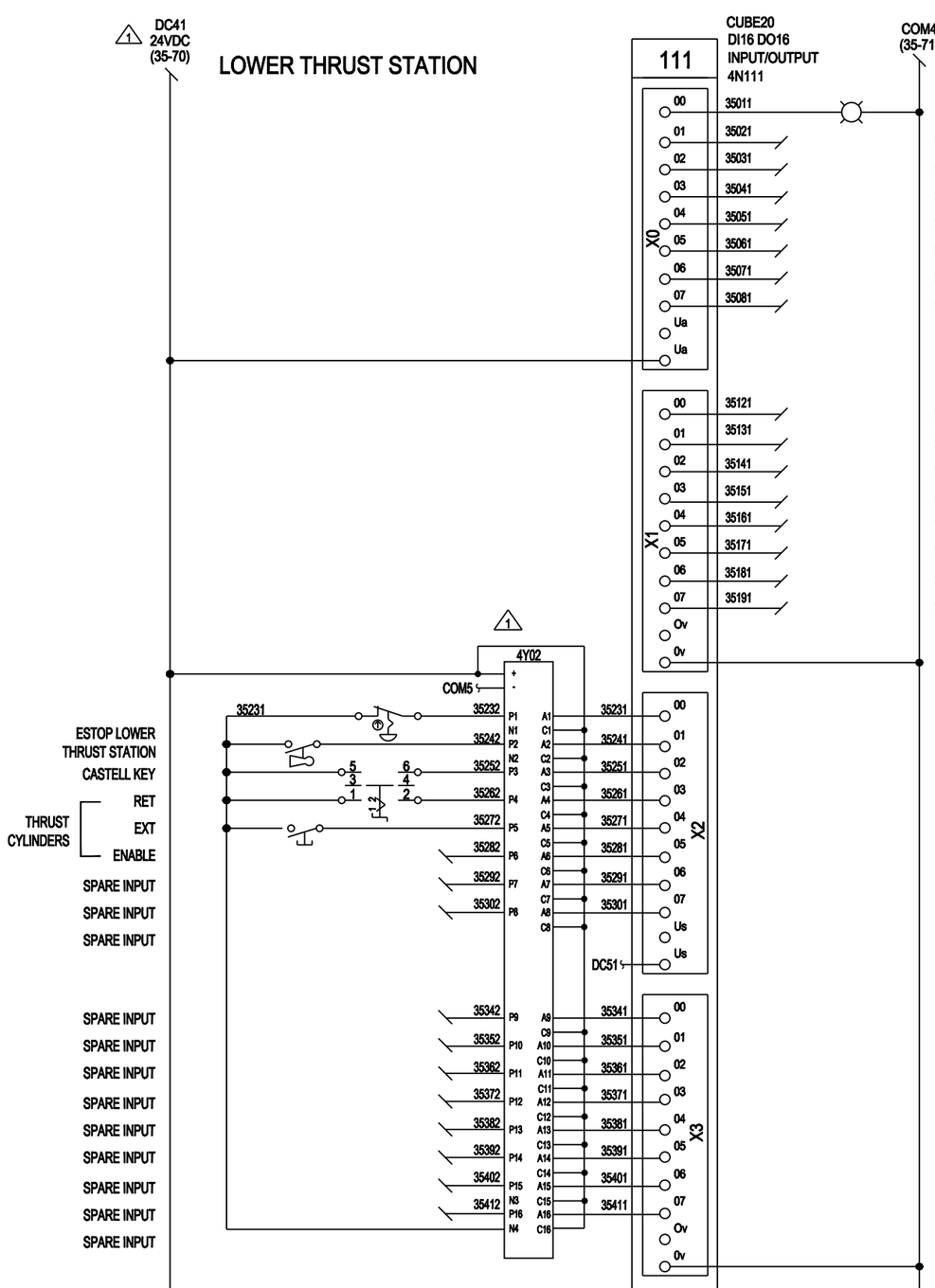

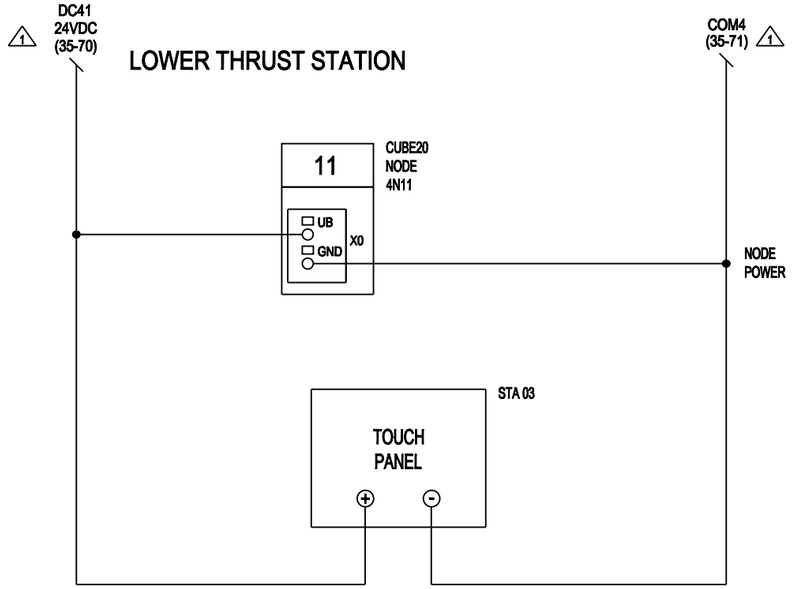

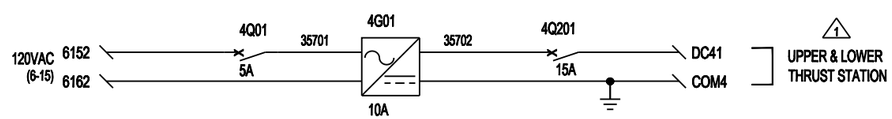

REV	DESCRIPTION	REVD BY/ DATE	APPD BY/ DATE
1	CHANGED SHEET NUMBERS, REMOVED "A" FROM CALLOUTS, ADDED 4Y02 BARRIER, ADDED LOWER TO CALLOUT	DBS 10JUL12	D.HOBBS 10JUL12

MACHINE	NEXT ASSY
EP82016-376	1046350
EP82016-377	1046350

UNLESS NOTED ALL DIMS ARE inch
TOLERANCES UNLESS NOTED
DIMENSIONS (D) ARE REFERENCE
ALL GEOMETRIC DIMENSIONING & TOLERANCING PER ANSI Y14.5-2009

TITLE: ELECTRICAL SCHEMATIC SAN FRANCISCO

SIZE: D | DWG No.: 1046646 | REV: 1 | SHT: 35 OF 51 | SCALE: 1"0"=1'0" | DO NOT SCALE

DRAWN BY: P.BRENNAN 3/6/2012
CHECKED BY/ENGINEER: P.BRENNAN 3/6/2012
APPROVED BY: D.HOBBS 3/6/2012

Robbins

www.TheRobbinsCompany.com

1046646

UPPER THRUST STATION

DC41 24VDC (35-70) ⚠1

CUBE20 DI16 DO16 INPUT/OUTPUT 4N112

COM4 (35-71) ⚠1

36-01				36-46
36-02		00 36011	THRUST STATION ACTIVE	36-46
36-03		01 36021	SPARE OUTPUT	36-47
36-04		02 36031	SPARE OUTPUT	36-48
36-05		03 36041	SPARE OUTPUT	36-49
36-06		04 36051	SPARE OUTPUT	36-50
36-07		05 36061	SPARE OUTPUT	36-51
36-08		06 36071	SPARE OUTPUT	36-52
36-09		07 36081	SPARE OUTPUT	36-53
36-10		Ua		36-54
36-11		Ua		36-55
36-12		00 36121		36-56
36-13		01 36131	SPARE OUTPUT	36-57
36-14		02 36141	SPARE OUTPUT	36-58
36-15		03 36151	SPARE OUTPUT	36-59
36-16		04 36161	SPARE OUTPUT	36-60
36-17		05 36171	SPARE OUTPUT	36-61
36-18		06 36181	SPARE OUTPUT	36-62
36-19		07 36191	SPARE OUTPUT	36-63
36-20		Ov	SPARE OUTPUT	36-64
36-21		Ov		36-65
36-22				36-66
36-23				36-67
36-24				36-68
36-25				36-69
36-26				36-70
36-27				36-71
36-28				36-72
36-29				36-73
36-30				36-74
36-31				36-75
36-32				36-76
36-33				36-77
36-34				36-78
36-35				36-79
36-36				36-80
36-37				
36-38				
36-39				
36-40				
36-41				
36-42				
36-43				
36-44				
36-45				

⚠1

4Y01

COM5 +/-

ESTOP UPPER THRUST STATION	36231	36232 P1	N1 C1	36231	00
CASTELL KEY		36242 P2	N2 C2	36241	01
THRUST CYLINDERS RET		36252 P3	C3 A3	36251	02
EXT		36262 P4	C4 A4	36261	03
ENABLE		36272 P5	C5 A5	36271	04
SPARE INPUT		36282 P6	C6 A6	36281	05
SPARE INPUT		36292 P7	C7 A7	36291	06
SPARE INPUT		36302 P8	C8 A8	36301	07
					Us
				DC51	Us
SPARE INPUT		36342 P9	C9 A9	36341	00
SPARE INPUT		36352 P10	C10 A10	36351	01
SPARE INPUT		36362 P11	C11 A11	36361	02
SPARE INPUT		36372 P12	C12 A12	36371	03
SPARE INPUT		36382 P13	C13 A13	36381	04
SPARE INPUT		36392 P14	C14 A14	36391	05
SPARE INPUT		36402 P15	C15 A15	36401	06
SPARE INPUT		36412 N3 P16	C16 A16 N4	36411	07
					Ov
					Ov

X0 X1 X2 X3

⚠1

UPPER THRUST STATION

DC41 24VDC (35-70) ⚠1

COM4 (35-71) ⚠1

CUBE20 NODE 4N11

UB GND X0

NODE POWER

STA 03

TOUCH PANEL ⊕ ⊖

REV	DESCRIPTION	REVD BY / DATE	APPD BY / DATE
1	CHANGED SHEET NUMBERS, REMOVED "A" FROM CALLOUTS, ADDED 4Y01 BARRIER, DELETED UPPER THRUST STATION	DBS 10JUL12	D.HOBBS 10JUL12

MACHINE	NEXT ASSY
EPB2016-376	1046350
EPB2016-377	1046350

UNLESS NOTED ALL DIMS ARE inch
TOLERANCES UNLESS NOTED
DIMENSIONS (X) ARE REFERENCE
ALL GEOMETRIC DIMENSIONING & TOLERANCING PER ANSI Y14.5-2009

TITLE: ELECTRICAL SCHEMATIC SAN FRANCISCO

SIZE D | DWG No. 1046646 | REV 1 | SHT 36 OF 51 | SCALE 10"=1'0" | DO NOT SCALE

DRAWN BY P.BRENNAN DATE 3/6/2012
CHECKED BY/MGR P.BRENNAN CHECKED DESIGN 3/6/2012
APPROVED BY D.HOBBS DATE 3/6/2012
WEIGHT TOTAL

Robbins

www.TheRobbinsCompany.com

1046646

PROPRIETARY NOTICE: The information disclosed hereon, in the sole property of The Robbins Company, is not to be used, copied, or disclosed in any way without the written permission of The Robbins Company. By accepting this information, or using it, the recipient agrees to indemnify The Robbins Company for any loss or liability resulting from any unauthorized use of this information. This warning is not to be construed as limiting the rights of The Robbins Company, which are to be interpreted broadly and to the maximum extent permitted by law.

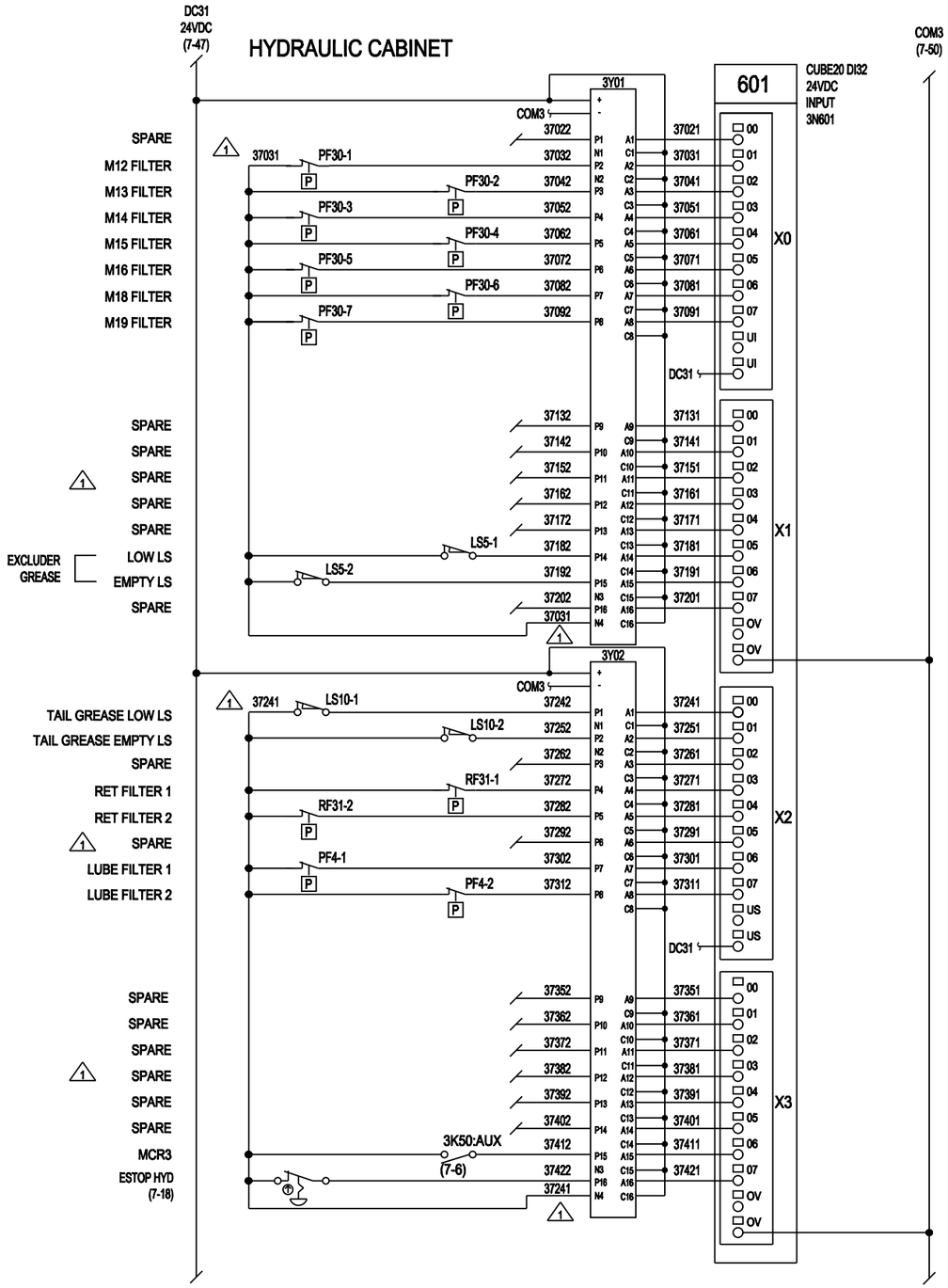

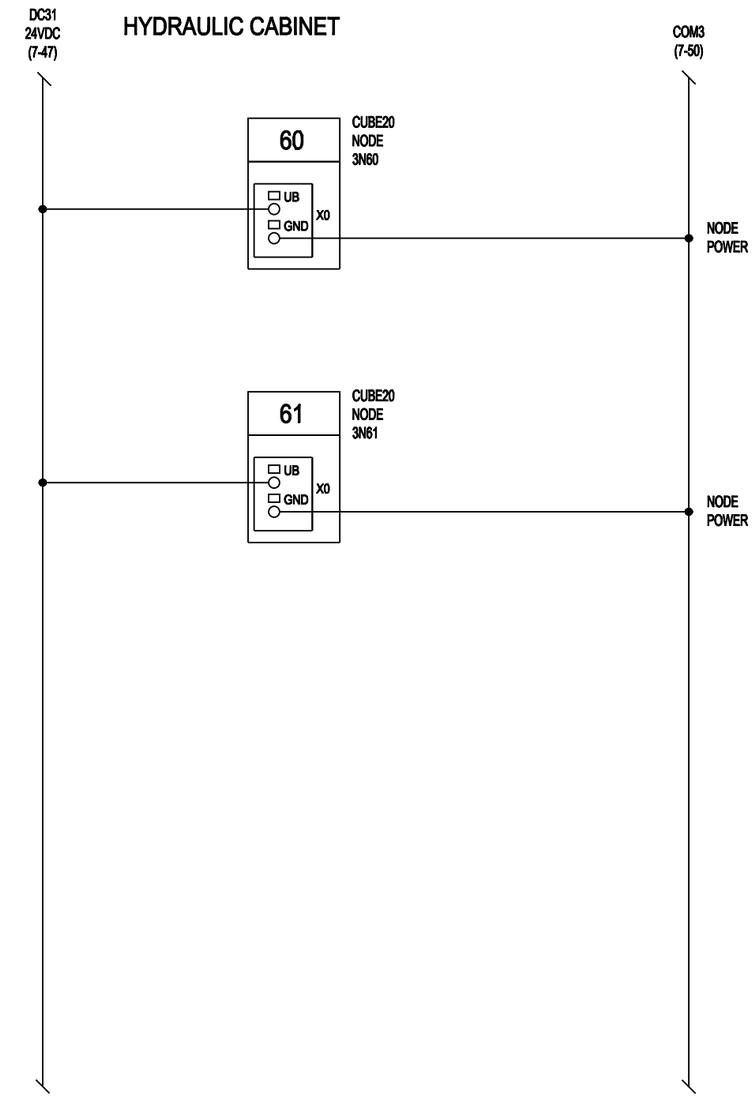

REV	DESCRIPTION	REVD BY/ DATE	APPD BY/ DATE
1	CHG'D SHT NUMBER, ADDED LINE NUMBERS, DELETED OPR STA FEED, FILTER 3	DBS 10JUL12	D.HOBBS 10JUL12

MACHINE	NEXT ASSY
EPB2016-376	1046350
EPB2016-377	1046350

UNLESS NOTED ALL DIMS ARE inch
TOLERANCES UNLESS NOTED
1' - 0" ± 1/16
1' - 1' ± 1/8
1' - 2' ± 1/4
2' + ± 1/2
FRACTIONS ± .03
X ± .03
XX ± .015
XXX ± .005
ANGLES ± 1°
SURFACE FINISH
THIRD-ANGLE PROJECTION
DIMENSIONS [X] ARE REFERENCE
ALL GEOMETRIC DIMENSIONING & TOLERANCING PER ANSI Y14.5-2009

TITLE: ELECTRICAL SCHEMATIC SAN FRANCISCO

SIZE D | DWG No. 1046646 | REV 1 | SHT 37 of 51 | SCALE 1"0"=1'0" DO NOT SCALE

DRAWN BY P.BRENNAN DATE 3/6/2012
CHECKED BY/ENGINEER P.BRENNAN CHECKED ON/DATE 3/6/2012
WEIGHT TOTAL
APPROVED BY D.HOBBS DATE 3/6/2012

Robbins

www.TheRobbinsCompany.com

1046646

PROPRIETARY NOTICE
The information disclosed hereon, is the sole property of The Robbins Company and is not to be used, reproduced or disclosed in any manner without the written permission of The Robbins Company. By accepting this information, recipient agrees to abide by the foregoing restrictions. Recipient agrees to return this information to The Robbins Company upon request and under all conditions. This material is to be used only, and to be returned, within the terms of the Master Contract.

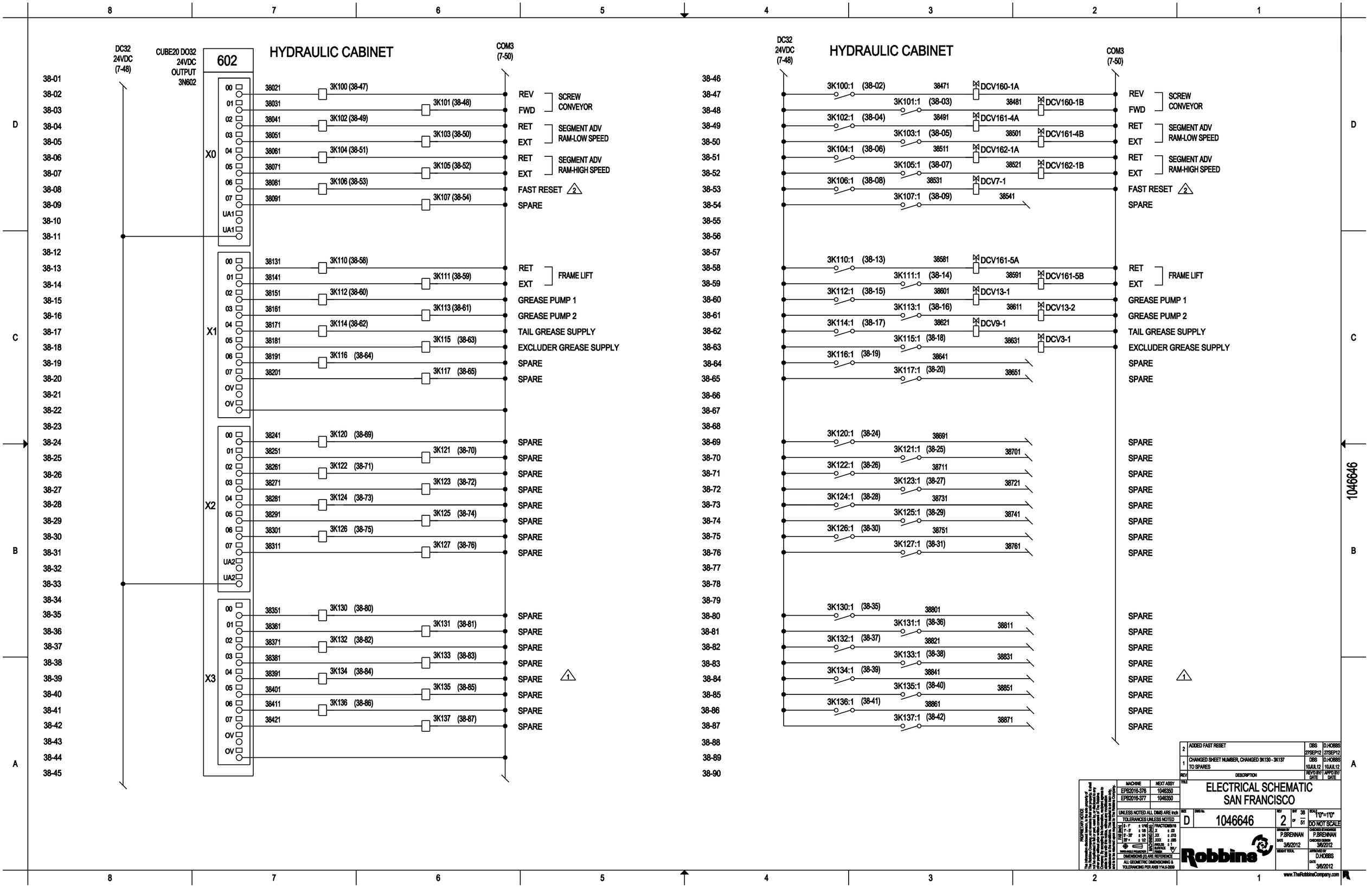

REV	DESCRIPTION	REVD BY/ DATE	APPD BY/ DATE
2	ADDED FAST RESET	DBS 27SEP12	D.HOBBS 27SEP12
1	CHANGED SHEET NUMBER, CHANGED 3K130 - 3K137 TO SPARES	DBS 10JUL12	D.HOBBS 10JUL12

TITLE: ELECTRICAL SCHEMATIC SAN FRANCISCO

MACHINE	NEXT ASSY
EPB2016-376	1046350
EPB2016-377	1046350

UNLESS NOTED ALL DIMS ARE Inch
TOLERANCES UNLESS NOTED
FRACTIONS±1/16 | X ±.03 | XX ±.015 | XXX ±.005 | ANGLES ±1° | SURFACE FINISH 250
DIMENSIONS (X) ARE REFERENCE.
ALL GEOMETRIC DIMENSIONING & TOLERANCING PER ANSI Y14.5-2009

SIZE D | DWG No. 1046646 | REV 2 | SHT 38 OF 51 | SCALE 1"0"=1"0" | DO NOT SCALE
DRAWN BY P.BRENNAN DATE 3/6/2012
CHECKED BY/CHECKED P.BRENNAN 3/6/2012
WEIGHT TOTAL
APPROVED BY D.HOBBS DATE 3/6/2012

Robbins
www.TheRobbinsCompany.com

PROPRIETARY NOTICE
This information disclosed hereon, to the sole property of The Robbins Company and is not to be reproduced in full or part, used by or disclosed to any person or corporation for any purpose without the written permission of The Robbins Company. By accepting this information, it is agreed to that it will be held in confidence and will not be copied, reproduced or disclosed to others except as may be specifically authorized in writing by The Robbins Company. This material is to be returned upon request and in any event upon completion of the use for which it was loaned.

HYDRAULIC CABINET

DC31 24VDC (7-47)

COM3 (7-50)

39-01 39-02 39-03 39-04 39-05 39-06 39-07 39-08 39-09 39-10 39-11 39-12 39-13 39-14 39-15 39-16 39-17 39-18 39-19 39-20 39-21 39-22 39-23 39-24 39-25 39-26 39-27 39-28 39-29 39-30 39-31 39-32 39-33 39-34 39-35 39-36 39-37 39-38 39-39 39-40

HYD TANK LEVEL

HYD TANK TEMPERATURE -17 TO +121°C

THRUST PRESSURE 0-400bar

OUTER & INNER SEAL PRESSURE

603 — CUBE20 AI4U/I 24VDC INPUT 3N603

LT51-1 — X/I — 2 3 4 — 39041 39061 39071

TT54-1 — T/I — 6 7 — 39141

PT38-1 — P/I — 1 2 3 — 39181 39201 39211

PT19-1 — P/I — 1 2 3 — 39251 39271 39281

CH 0: +U0 +I0 OV SO US GND

CH 1: +U1 +I1 OV S1 US GND — 39111

CH 2: +U2 +I2 OV S2 US GND

CH 3: +U3 +I3 OV S3 US GND

PS: UI UI OV OV OV OV

39-41 39-42 39-43 39-44 39-45 39-46 39-47 39-48 39-49 39-50 39-51 39-52 39-53 39-54 39-55 39-56 39-57 39-58 39-59 39-60 39-61 39-62 39-63 39-64 39-65 39-66 39-67 39-68 39-69 39-70 39-71 39-72 39-73 39-74 39-75 39-76 39-77 39-78 39-79 39-80

SCREW AUX FUNCS PRESSURE 0-400bar

M16 PRESSURE 0-400bar

SEGMENT SYSTEM PRESSURE 0-400bar

M15 PILOT PRESSURE 0-40bar

604 — CUBE20 AI4U/I 24VDC INPUT 3N604

PT38-9 — P/I — 1 2 3 — 39441 39461 39471

PT38-7 — P/I — 1 2 3 — 39511 39531 39541

PT38-10 — P/I — 1 2 3 — 39581 39601 39611

PT37-1 — P/I — 1 2 3 — 39651 39671 39681

CH 0: +U0 +I0 OV SO US GND

CH 1: +U1 +I1 OV S1 US GND

CH 2: +U2 +I2 OV S2 US GND

CH 3: +U3 +I3 OV S3 US GND

PS: UI UI OV OV OV OV

1046646

REV	DESCRIPTION	DBS 10AUL12 REV'D BY/DATE	D.HOBBS 10AUL12 APP'D BY/DATE
1	CHANGED SHEET NUMBER		

PROPRIETARY NOTICE
The information disclosed herein, in the size property of The Robbins Company, and shall not be reproduced or copied or used in whole or in part, used for, or disclosed to any other party for any purpose whatsoever without the written permission of The Robbins Company. By accepting this information, recipient agrees to retain same in confidence, to limit access thereto to employees of recipient with a need to know thereof and to take such other precautions as recipient normally takes to retain its own confidential information. This notice is not to be construed as an admission or presumption of publication nor shall any rights be granted hereunder for any use of this information inconsistent with the foregoing restrictions.

MACHINE	NEXT ASSY
EPB2016-376	1046350
EPB2016-377	1046350

UNLESS NOTED ALL DIMS ARE Inch

TOLERANCES UNLESS NOTED

0 - 1'	± 1/16	FRACTIONS	1/8
1' - 3'	± 1/8	.X	± .03
3' - 20'	± 1/4	.XX	± .015
20' +	± 1/2	.XXX	± .005
		ANGLES	± 1
		SURFACE	125
		FINISH	

THIRD ANGLE PROJECTION

DIMENSIONS IN [ ] ARE REFERENCE

ALL GEOMETRIC DIMENSIONING & TOLERANCING PER ANSI Y14.5-2009

ELECTRICAL SCHEMATIC SAN FRANCISCO

SIZE	DWG No.	REV	SHT	SCALE
D	1046646	1	39 of 51	1"0"=1'0"

DO NOT SCALE

DRAWN BY: P.BRENNAN — DATE: 3/6/2012

CHECKED BY/ENGINEER: P.BRENNAN — CHECKED ENGINEER DATE: 3/6/2012

WEIGHT TOTAL:

APPROVED BY: D.HOBBS — DATE: 3/6/2012

Robbins

www.TheRobbinsCompany.com

1046646

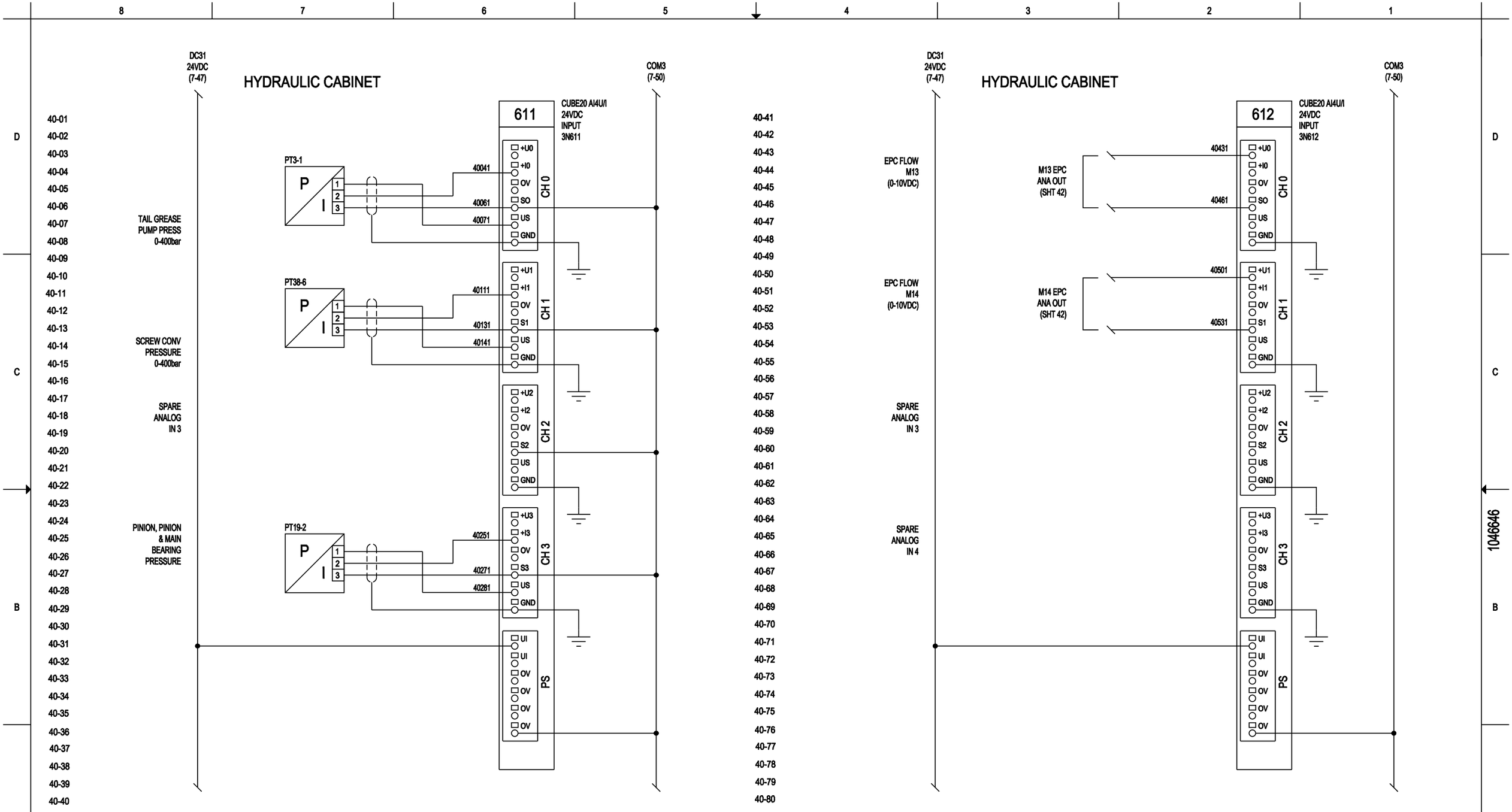

REV	DESCRIPTION	REV'D BY/ DATE	APP'D BY/ DATE
1	CHANGED SHEET NUMBER	DBS 10JUL12	D.HOBBS 10JUL12

MACHINE	NEXT ASSY
EPB2016-376	1046350
EPB2016-377	1046350

UNLESS NOTED ALL DIMS ARE inch

TOLERANCES UNLESS NOTED

0 - 1"	± 1/16	FRACTIONS/1/16	
1" - 5"	± 1/8	.X	± .03
5" - 20"	± 1/4	.XX	± .015
20" +	± 1/2	.XXX	± .005
		ANGLES	± 1
		SURFACE	125
		FINISH	

THIRD ANGLE PROJECTION

DIMENSIONS (X) ARE REFERENCE

ALL GEOMETRIC DIMENSIONING & TOLERANCING PER ANSI Y14.5-2009

PROPRIETARY NOTICE

This information disclosed herein, is the sole property of The Robbins Company and is not to be used, copied or used for the duplication of all or part, used by, or disclosed to any other party without prior written consent of The Robbins Company. By accepting this information, recipient agrees to abide by the Robbins Company, without prior written consent of the Robbins Company. This material is not to be copied, sold or used in any manner to the Robbins Company.

TITLE

ELECTRICAL SCHEMATIC SAN FRANCISCO

SIZE	DWG No.	REV	SHT	SCALE
D	1046646	1	40 OF 51	1'0"=1'0" DO NOT SCALE

DRAWN BY P.BRENNAN DATE 3/6/2012

CHECKED STANDARDS P.BRENNAN CHECKED DESIGN 3/6/2012

WEIGHT TOTAL

APPROVED BY D.HOBBS DATE 3/6/2012

Robbins

www.TheRobbinsCompany.com

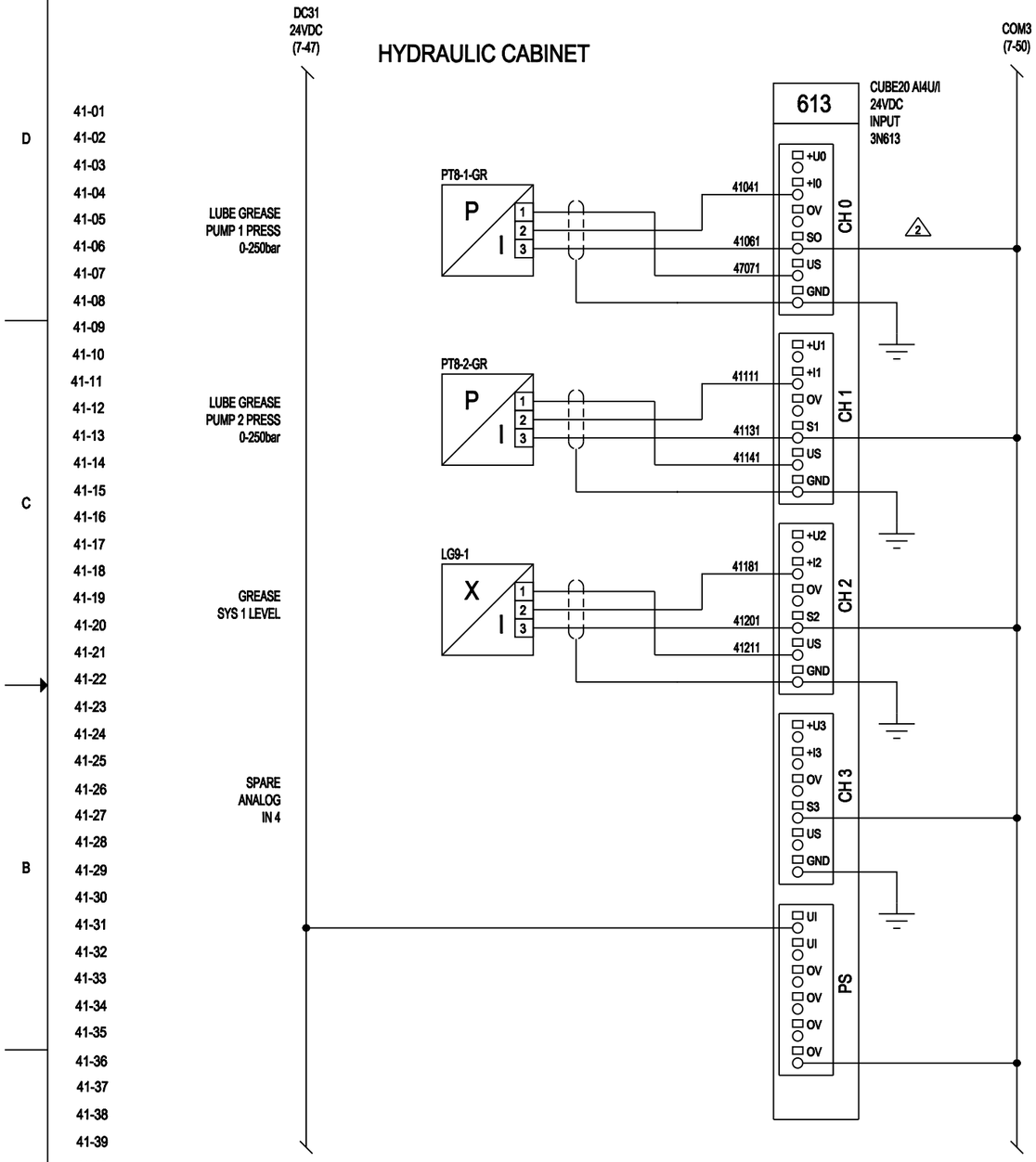

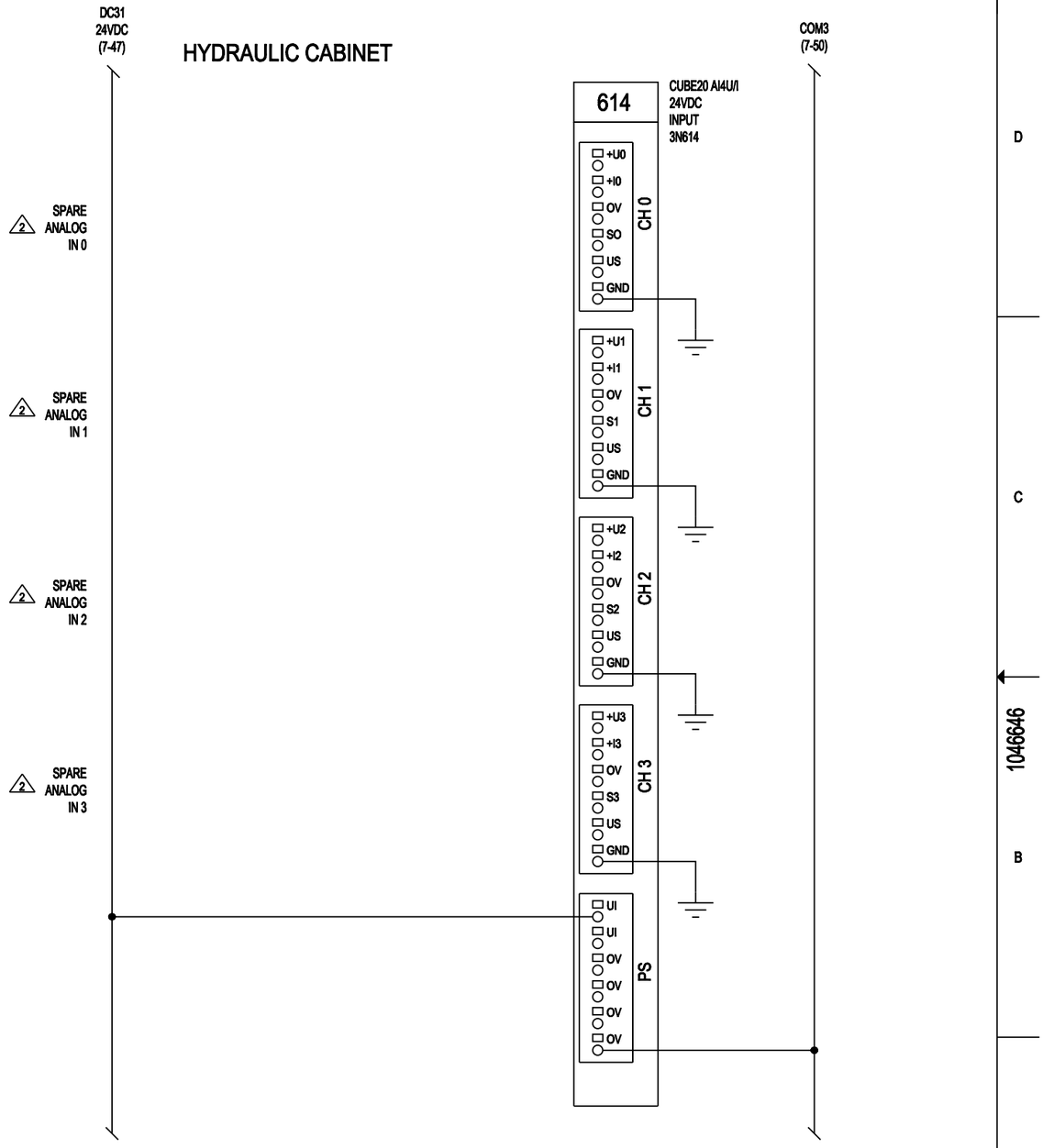

REV	DESCRIPTION	DRAWN BY / DATE	APPROVED BY / DATE
2	ADDED CONNECTOR CH0 TO COM3, REMOVED PRESSURE SWITCHES CHANGED TO SPARES	DBS 27SEP12	D.HOBBS 27SEP12
1	CHANGED SHEET NUMBER	DBS 10JUL12	D.HOBBS 10JUL12

MACHINE	NEXT ASSY
EPB2016-376	1046350
EPB2016-377	1046350

UNLESS NOTED ALL DIMS ARE Inch

TOLERANCES UNLESS NOTED

0 - 1"	± 1/16	FRACTIONS	
1" - 3"	± 1/8	.X	± .03
3" - 20"	± 1/4	.XX	± .015
20" +	± 1/2	.XXX	± .005
		ANGLES	± 1
		SURFACE	125
		FINISH	

DIMENSIONS (X) ARE REFERENCE

ALL GEOMETRIC DIMENSIONING & TOLERANCING PER ANSI Y14.5-2009

PROPRIETARY NOTICE
The information disclosed hereon, in the sole property of Robbins Company and is not to be used, reproduced or disclosed to others except as specifically authorized in writing by the Company. By accepting this information, recipient agrees to protect the same from loss, theft or unauthorized use and to return it to the Company upon request. This notice is not to be removed, altered or obliterated from this drawing.

ELECTRICAL SCHEMATIC
SAN FRANCISCO

SIZE	DWG No.	REV	SHT	SCALE
D	1046646	2	41 of 51	1"0"=1"0" DO NOT SCALE

DRAWN BY: P.BRENNAN
DATE: 3/6/2012
CHECKED BY/ENGINEER: P.BRENNAN
CHECKED DESIGN: 3/6/2012
WEIGHT TOTAL:
APPROVED BY: D.HOBBS
DATE: 3/6/2012

Robbins

www.TheRobbinsCompany.com

1046646

HYDRAULIC CABINET

DC31 24VDC (7-47)

COM3 (7-50)

CUBE20 A04 24VDC OUTPUT 3N615

615

CH 0 / CH 1 / CH 2 / CH 3 / PS

+U0, +I0, OV, UA0, GND

+U0, +I0, OV, UA1, GND

+U0, +I0, OV, UA2, GND

+U0, +I0, OV, UA3, GND

UI, UI, OV, OV, OV, OV

42031, 42051, 42101, 42251, 42261, 42281

M13 CONTROLLER

EPC

ANALOG INPUT 1 — 42031 / 42051

ANALOG INPUT 2 — 42101 / 42051

ANALOG INPUT 3

LVDT ANALOG INPUT 4

LVDT OSCILLATOR

SUPPLY 24VDC — DC31 24VDC

DIGITAL

VALVE DRIVER — 42071 / 42072

ANALOG OUTPUT 2 — 40431 / 40461 — SHT 40

SCREW CONV SPEED SIG (0-10VDC)

LVDT: BLK 42101, WHT 42102, RED 42103, GRN 42104 — (A), (B), (D), (C)

SCREW CONV PRESS SIG (0-10VDC)

M14 CONTROLLER

EPC

ANALOG INPUT 1 — 42031 / 42051

ANALOG INPUT 2 — 42101 / 42051

ANALOG INPUT 3

LVDT ANALOG INPUT 4

LVDT OSCILLATOR

SUPPLY 24VDC — DC31 24VDC

DIGITAL

VALVE DRIVER — 42181 / 42182

ANALOG OUTPUT 2 — 40501 / 40501 — SHT 40

SPARE ANALOG OUT 3

LVDT: BLK 42211, WHT 42212, RED 42213, GRN 42214 — (A), (B), (D), (C)

SPARE ANALOG OUT 4

PFC146-1 LYNCH

3, 2, 1

SPARE

HYDRAULIC CABINET

DC31 24VDC (7-47)

COM3 (7-50)

CUBE20 AI4U/I 24VDC INPUT 3N616

616

CH 0 / CH 1 / CH 2 / CH 3 / PS

+U0, +I0, OV, SO, US, GND — 42431, 42461, 42471

+U1, +I1, OV, S1, US, GND — 42511, 42531

+U2, +I2, OV, S2, US, GND

+U3, +I3, OV, S3, US, GND

UI, UI, OV, OV, OV, OV

COPY CUTTER TANK LEVEL

COPY CUTTER TANK TEMP -17 TO +121°C

SPARE IN

SPARE

REV	DESCRIPTION	REVD BY / DATE	APPD BY / DATE
2	CORRECTED LINE NUMBER, WAS 42541	DBS 27SEP12	D.HOBBS 27SEP12
1	CHGD SHT NUMBER, MOVED THRUST FLOW TO 3N615, CHG'D LINE NUMBERS. CHG'D 3N616 TO INPUT	DBS 10JUL12	D.HOBBS 10JUL12

TITLE: ELECTRICAL SCHEMATIC SAN FRANCISCO

MACHINE	NEXT ASSY
EPB2016-376	1040XXX
EPB2016-377	1040XXX

UNLESS NOTED ALL DIMS ARE Inch

TOLERANCES UNLESS NOTED

FRACTIONS ±1/16, X ±.03, XX ±.015, XXX ±.005, ANGLES ±1°, SURFACE FINISH 250

DIMENSIONS (X) ARE REFERENCE.

ALL GEOMETRIC DIMENSIONING & TOLERANCING PER ANSI Y14.5-2009

SIZE D | DWG No. 1046646 | REV 2 | SHT 42 OF 51 | SCALE 1"0"=1"0" DO NOT SCALE

DRAWN BY P.BRENNAN DATE 3/6/2012

CHECKED BY/CHECKER P.BRENNAN CHECKED DESIGN 3/6/2012

WEIGHT TOTAL

APPROVED BY D.HOBBS DATE 3/6/2012

Robbins

www.TheRobbinsCompany.com

1046646

PROPRIETARY NOTICE
This information disclosed hereon, to the sole property of The Robbins Company and is not to be reproduced in full or part, used by or disclosed to any person or corporation for any purpose without the written permission of The Robbins Company. By accepting this information, it is agreed to that it will be held in confidence and will not be copied, reproduced or disclosed to others or used in whole or in part except as authorized in this restriction. This material is on loan only, and is to be returned to The Robbins Company upon request.

MAIN ELECTRICAL CABINET FWD

DC11 24VDC (7-41)

COM1 (7-45)

801 — CUBE20 DI32 24VDC INPUT 1N801

43-01					
43-02	M11	1Q11:1	(2-52)	43021	00
43-03	M13	1Q13:1	(2-24)	43031	01
43-04	M14	1Q14:1	(2-30)	43041	02
43-05	SPARE			43051	03
43-06	M17	1Q17:1	(2-55)	43061	04
43-07	M22	1Q22:1	(2-49)	43071	05
43-08	M18	1Q18:1	(2-35) ⚠1	43081	06
43-09	M24	1Q24:1	(2-43)	43091	07
43-10					UI
43-11					UI

C/B STATUS — X0

43-12					
43-13	M11	1K11-OL:2	(2-52)	43131	00
43-14	M13	1SS13-FLT 3 7	(2-24)	43141	01
43-15	M14	1SS14-FLT 3 7	(2-30)	43151	02
43-16	SPARE			43161	03
43-17	M17	1K17-O/L:2	(2-36)	43171	04
43-18	M22	1K22-O/L:2	(2-55)	43181	05
43-19	M18	1SS18-FLT	(2-49)	43191	06
43-20	M24	1K24-O/L:2	(2-35) ⚠1	43201	07
43-21			(2-43)		OV
43-22					OV

OVERLOAD STATUS — X1

43-23					
43-24	SPARE	⚠2		43241	00
43-25	SPARE			43251	01
43-26	SPARE			43261	02
43-27	SPARE			43271	03
43-28	SPARE			43281	04
43-29	SPARE			43291	05
43-30	SPARE			43301	06
43-31	SPARE			43311	07
43-32					US
43-33					US

X2

43-34					
43-35	MCR1	1K50:AUX	(7-4)	43351	00
43-36	ESTOP VFD FWD			43361	01
43-37	ESTOP CONV L			43371	02
43-38	ESTOP CONV R			43381	03
43-39	ESTOP MEC 1			43391	04
43-40	ESTOP VFD AFT			43401	05
43-41	SPARE			43411	06
43-42	SPARE			43421	07
43-43					OV
43-44					OV
43-45					

X3

MAIN ELECTRICAL CABINET FWD

DC11 24VDC (7-41)

COM1 (7-45)

80 — CUBE20 NODE 1N80

UB, GND — X0

NODE POWER

43-46	
43-47	
43-48	
43-49	
43-50	
43-51	
43-52	
43-53	
43-54	
43-55	
43-56	
43-57	
43-58	
43-59	
43-60	
43-61	
43-62	
43-63	
43-64	
43-65	
43-66	
43-67	
43-68	
43-69	
43-70	
43-71	
43-72	
43-73	
43-74	
43-75	
43-76	
43-77	
43-78	
43-79	
43-80	

REV	DESCRIPTION	REVD BY / DATE	APPD BY / DATE
2	REMOVED ESSENTIAL SERVICES CABINET	DBS 28SEP12	D.HOBBS 28SEP12
1	CHANGED SHEET NUMBERS, CORRECTED REF NUMBERS	DBS 10JUL12	D.HOBBS 10JUL12

TITLE: ELECTRICAL SCHEMATIC SAN FRANCISCO

MACHINE	NEXT ASSY
EPB2016-376	1046350
EPB2016-377	1046350

UNLESS NOTED ALL DIMS ARE inch
TOLERANCES UNLESS NOTED
1" - 1' ± 1/16 | 1'-1' ± 1/8 | 1'-10' ± 1/4 | 10'+ ± 1/2
FRACTIONS ± .03 | X ± .03 | XX ± .015 | XXX ± .005 | ANGLES ± 1 | SURFACE FINISH
DIMENSIONS [X] ARE REFERENCE
ALL GEOMETRIC DIMENSIONING & TOLERANCING PER ANSI Y14.5-2009

SIZE D | DWG No. 1046646 | REV 2 | SHT 43 of 51 | SCALE 1"0"=1'0" DO NOT SCALE

DRAWN BY P.BRENNAN DATE 3/6/2012
CHECKED ENGINEER P.BRENNAN CHECKED DESIGN 3/6/2012
WEIGHT TOTAL
APPROVED BY D.HOBBS DATE 3/6/2012

Robbins

www.TheRobbinsCompany.com

1046646

PROPRIETARY NOTICE
The information disclosed hereon is the sole property of Robbins Company and may not be used, reproduced or disclosed in any manner without the express written permission of Robbins Company. By accepting this information, recipient agrees to abide by the foregoing restrictions. Recipient agrees to return this information to Robbins Company under any of the following conditions: This material is to be used only for the purpose for which it was loaned, or upon demand, and is to be returned immediately thereafter. (ISO 9001)

MAIN ELECTRICAL CABINET FWD

DC13 24VDC (7-43)

CUBE20 DO32 24VDC OUTPUT 1N802

802

COM1 (7-45)

X0	00	44021	1K100 (44-47)	M11 FILTER 1 PUMP
	01	44031	1K101 (44-48)	SPARE
	02	44041	1K102 (44-49)	SPARE
	03	44051	1K103 (44-50)	SPARE
	04	44061	1K104 (44-51)	M17 FILTER 2 PUMP
	05	44071	1K105 (44-52)	M22 LUBE PUMP
	06	44081	1K106 (44-53)	SPARE △2
	07	44091	1K107 (44-54)	SPARE
	UA1			
	UA1			
X1	00	44131	1K110 (44-58)	SPARE
	01	44141	1K111 (44-59)	M24 VFD COOLING
	02	44151	1K112 (44-60)	SPARE
	03	44161	1K113 (44-61)	SPARE
	04	44171		SPARE (NOT USED)
	05	44181		SPARE (NOT USED)
	06	44191		SPARE (NOT USED)
	07	44201		SPARE (NOT USED)
	OV			
	OV			
X2	00	44241	1K120 (44-68)	M13 SCREW CONV
	01	44251	1K121 (44-72)	M14 SCREW CONV
	02	44261	1K122	M18 EREC ROTATE
	03	44271	1K123	SPARE
	04	44281	1K124	SPARE
	05	44291	1K125	SPARE
	06	44301	1K126	SPARE
	07	44311	1K127 (44-80)	CHD MOTOR HEATERS
	UA2			
	UA2			
X3	00	44351		SPARE (NOT USED)
	01	44361		SPARE (NOT USED)
	02	44371		SPARE (NOT USED)
	03	44381		SPARE (NOT USED)
	04	44391		SPARE (NOT USED)
	05	44401		SPARE (NOT USED)
	06	44411		SPARE (NOT USED)
	07	44421		SPARE (NOT USED)
	OV			
	OV			

120VAC CIRCUIT

5553 120VAC (5-55)

5562 N (5-56)

1K100:1	(44-02)	44471	1K11 (2-52)	44472	1K11-O/L → M11 FILTER 1 PUMP
1K101:1	(44-03)				→ SPARE 120V
1K102:1	(44-04)	44491			→ SPARE 120V
1K103:1	(44-05)				→ SPARE 120V
1K104:1	(44-06)	44511	1K17 (2-55)	44512	1K17-O/L → M17 FILTER 2 PUMP
1K105:1	(44-07)	44521	1K22 (2-49)	44522	1K22-O/L → M22 LUBE PUMP
1K106:1	(44-08)	44531			→ SPARE 120V △2
1K107:1	(44-09)	44541			→ SPARE 120V
1K110:1	(44-13)	44581			→ SPARE
1K111:1	(44-14)	44591	1K24 (2-43)	37592	1K24-O/L → M24 VFD COOLING
1K112:1	(44-15)	44601			→ SPARE 120V
1K113:1	(44-16)	44611			→ SPARE 120V

SOFTSTART CIRCUIT

1SS13 (2-24) 8 / 9 / 11 → M13 SCREW CONV

1K120 (44-24)

1SS14 (2-30) 8 / 9 / 11 → M14 SCREW CONV

1K121 (44-25)

1SS18 (2-30) 8 / 9 / 11 → M18 EREC ROTATE

1K122 (44-26) △1

DC13 → 1K127:1(44-31) → 1K55(6-7) → COM1 → CHD MOTOR HEATERS

REV	DESCRIPTION	REVD BY/ DATE	APPD BY/ DATE
2	DELETED M19 COPY CUTTER/ERY EREC ROTATE	DBS 28SEP12	D.HOBBS 28SEP12
1	CHANGED SHEET NUMBERS, CORRECTED REF NUMBER	DBS 10JUL12	D.HOBBS 10JUL12

MACHINE	NEXT ASSY
EPB2016-376	1046350
EPB2016-377	1046350

UNLESS NOTED ALL DIMS ARE inch
TOLERANCES UNLESS NOTED
FRACTIONS±1/16 | X ±.03 | XX ±.015 | XXX ±.005 | ANGLES ±1
SURFACE FINISH 250
REMOVE ALL SHARP EDGES
DIMENSIONS (X) ARE REFERENCE
ALL GEOMETRIC DIMENSIONING & TOLERANCING PER ANSI Y14.5-2009

PROPRIETARY NOTICE: The information disclosed hereon, in the sole property of Robbins Company and shall not be reproduced in whole or part, used by, or disclosed to any third party without the written permission of Robbins Company. By accepting this information, recipient agrees to use the information solely for the purpose authorized by Robbins Company and to return it to Robbins Company upon request. This material is not to be sold.

ELECTRICAL SCHEMATIC
SAN FRANCISCO

SIZE D | DWG No. 1046646 | REV 2 | SHT 44 OF 51 | SCALE 1/0"=1'0" DO NOT SCALE

DRAWN BY P.BRENNAN DATE 3/6/2012
CHECKED BY/ENGINEER P.BRENNAN CHECKED DESIGN 3/6/2012
WEIGHT TOTAL
APPROVED BY D.HOBBS DATE 3/6/2012

Robbins

www.TheRobbinsCompany.com

1046646

MAIN ELECTRICAL CABINET FWD

DC11
24VDC
(7-41)

COM1
(7-45)

CUBE20 AI4 U/I
24VDC
INPUT
1N803

803

SUBSTATION
X1:80 — 45041 — +I0
X1:79 — 45051 — OV
CH 0
SO
US
GND

TRAFO TEMP
0-250°C

1B96
8 — 45121 — +I1
COM 12 — 45131 — OV
CH 1
S1
+24V 11 — 45151 — US
GND
V
mA

BUS VOLTS
L1-L2
0-600V

9 — 45191 — +I2
OV
CH 2
S2
US
GND

BUS VOLTS
L2-L3
0-600V

10 — 45261 — +I3
OV
CH 3
S3
US
GND

BUS VOLTS
L1-L3
0-600V

UI
UI
OV
OV
PS
OV
OV
OV
OV

45-01 45-02 45-03 45-04 45-05 45-06 45-07 45-08 45-09 45-10 45-11 45-12 45-13 45-14 45-15 45-16 45-17 45-18 45-19 45-20 45-21 45-22 45-23 45-24 45-25 45-26 45-27 45-28 45-29 45-30 45-31 45-32 45-33 45-34 45-35 45-36 45-37 45-38 45-39 45-40

45-41 45-42 45-43 45-44 45-45 45-46 45-47 45-48 45-49 45-50 45-51 45-52 45-53 45-54 45-55 45-56 45-57 45-58 45-59 45-60 45-61 45-62 45-63 45-64 45-65 45-66 45-67 45-68 45-69 45-70 45-71 45-72 45-73 45-74 45-75 45-76 45-77 45-78 45-79 45-80

DC11
24VDC
(7-41)

COM1
(7-45)

MAIN ELECTRICAL CABINET FWD

CUBE20 AI4 U/I
24VDC INPUT
1N804

804

M13
AMPS
0-134A

1SS13
13 — 45441 — +U0
14 — 45461 — +I0
OV
SO
CH 0
US
GND

M14
AMPS
0-134A

1SS14
13 — 45511 — +U1
14 — 45531 — +I1
OV
S1
CH 1
US
GND

M18
AMPS
0-134A

1SS18
13 — 45581 — +U2
14 — 45601 — +I2
OV
S2
CH 2
US
GND

SPARE

+U3
+I3
OV
S3
CH 3
US
GND

UI
UI
OV
OV
PS
OV
OV

REV	DESCRIPTION	DBS DATE	D.HOBBS 10JUL12
1	CHANGED SHEET NUMBERS	10JUL12	10JUL12

MACHINE	NEXT ASSY
EPB2016-376	1046350
EPB2016-377	1046350

UNLESS NOTED ALL DIMS ARE Inch
TOLERANCES UNLESS NOTED
0 - 1" ± 1/16 | FRACTIONS 1/8
1" - 3" ± 1/8 | .X ± .03
3" - 20" ± 1/4 | .XX ± .015
20" + ± 1/2 | .XXX ± .005
ANGLES ± 1
SURFACE 125/
DIMENSIONS IN [ ] ARE METRIC EQUIVALENTS
DIMENSIONS IN ( ) ARE REFERENCE
ALL GEOMETRIC DIMENSIONING & TOLERANCING PER ANSI Y14.5-2009

TITLE: ELECTRICAL SCHEMATIC SAN FRANCISCO

SIZE D | DWG No. 1046646 | REV 1 | SHT 45 of 51 | SCALE 1/0"=1'0" | DO NOT SCALE

DRAWN BY P.BRENNAN DATE 3/6/2012
CHECKED BY/MGR P.BRENNAN CHECKED/DESIGN 3/6/2012
WEIGHT/LOCAL
APPROVED BY D.HOBBS DATE 3/6/2012

Robbins

www.TheRobbinsCompany.com

1046646

PROPRIETARY NOTICE
The information disclosed herein, in the size property of The Robbins Company, and may not be reproduced or used for any purpose not expressly permitted in writing by The Robbins Company. By accepting this information, recipient agrees to return it on request and not to disclose it to others without permission, and to use it only for the purpose for which it was loaned. This notice is to be construed as including or subject to any further limitations put on the information by the Robbins Company.

MAIN ELECTRICAL CABINET AFT

DC11 24VDC (7-41)

COM1 (7-45)

821 — CUBE20 DI32 24VDC INPUT 2N821

M12	2Q12:1	(3-18)	46021	00	X0
M15	2Q15:1	(3-43)	46031	01	
M16	2Q16:1	(3-24)	46041	02	
2 M19	2Q19:1	(3-55)	46051	03	
C/B STATUS M20	2Q20:1	(3-36)	46061	04	
2 M50	2Q26:1	(3-30)	46071	05	
2 M21	2Q21:1	2 (3-49)	46081	06	
SPARE			46091	07	
				UI	
				UI	
			46131	00	X1
SPARE			46141	01	
SPARE			46151	02	
M25	2Q25:1	(3-46)	46161	03	
SPARE			46171	04	
SPARE			46181	05	
OVERLOAD STATUS M25	2K25-O/L:2	(3-46)	46191	06	
M21	2K21-O/L:2	(3-49)	46201	07	
				OV	
				OV	
M12	2SS12-FLT 3 7	(3-18)	46241	00	X2
M15	2K15-O/L:2	(3-43)	46251	01	
M16	2SS16-FLT 3 7	(3-24)	46261	02	
2 M19	2K19-O/L:2	(3-55)	46271	03	
M20	2K20-O/L:2	(3-36)	46281	04	
2 M50	2SS26-FLT 3 7	(3-30)	46291	05	
SPARE			46301	06	
CABLE REEL LIMIT SW (WHEN USED)			46311	07	
				US	
				US	
BELT SLIP SW		COM1	46351	00	X3
2 ESTOP GANTRY 6			46361	01	
ESTOP GANTRY 8			46371	02	
ESTOP MEC2			46381	03	
SPARE			46391	04	
SPARE			46401	05	
SPARE			46411	06	
SPARE			46421	07	
				OV	
				OV	

82 — CUBE20 NODE 2N82

UB, GND (X0) → NODE POWER

DC11 24VDC (7-41)

M12 AMPS 0-172A

M16 AMPS 0-114A

M26 AMPS 0-67A

SPARE

MAIN ELECTRICAL CABINET AFT

COM1 (7-45)

823 — CUBE20 AI4 U/I 24VDC INPUT 2N823

ISS12	13	46501	CH 0: +U0, +I0, OV, SO, US, GND
	14	46521	
ISS16	13	46571	CH 1: +U1, +I1, OV, S1, US, GND
	14	46591	
ISS26	13	46641	CH 2: +U2, +I2, OV, S2, US, GND
	14	46661	
			CH 3: +U3, +I3, OV, S3, US, GND
			PS: UI, UI, OV, OV, OV, OV, OV

REV	DESCRIPTION	REVD BY / DATE	APP'D BY / DATE
2	ADDED M19 AND M21, CHANGED M26 TO 51 CHANGED GANTRY ESTOP NUMBERS	DBS 27SEP12	D.HOBBS 27SEP12
1	CHANGED SHEET NUMBERS	DBS 10JUL12	D.HOBBS 10JUL12

TITLE: ELECTRICAL SCHEMATIC SAN FRANCISCO

MACHINE	NEXT ASSY
EPB2016-376	1046350
EPB2016-377	1046350

UNLESS NOTED ALL DIMS ARE Inch

TOLERANCES UNLESS NOTED

0 - 1"	± 1/16	FRACTIONS	1/8
1" - 2"	± 1/8	.X	± .03
2" - 20"	± 1/4	.XX	± .015
20" +	± 1/2	.XXX	± .005
		ANGLES	± 1
		SURFACE FINISH	125

DIMENSIONS (D) ARE REFERENCE

ALL GEOMETRIC DIMENSIONING & TOLERANCING PER ANSI Y14.5-2009

SIZE D | DWG No. 1046646 | REV 2 | SHT 46 OF 51 | SCALE 1"0"=1'0" | DO NOT SCALE

DRAWN BY: P.BRENNAN, DATE 3/6/2012 | CHECKED BY/ENGR: P.BRENNAN, CHECKED ENGR 3/6/2012 | WEIGHT TOL: | APPROVED BY: D.HOBBS, DATE 3/6/2012

Robbins — www.TheRobbinsCompany.com

1046646

PROPRIETARY NOTICE
The information disclosed hereon is the sole property of Robbins Company and is not to be used, reproduced or disclosed to others without the written permission of Robbins Company. By accepting this information, recipient agrees to use it only for the purpose for which it is furnished by Robbins Company, and to return it upon request. This drawing is to be used in accordance with all applicable laws and regulations of Robbins Company.

MAIN ELECTRICAL CABINET AFT

DC13 24VDC (7-43)

CUBE20 DO32 24VDC OUTPUT 2N822

822

COM1 (7-45)

X0

00	47021	2K100 (47-47)	SPARE
01	47031	2K101 (47-48)	M15 PILOT
02	47041	2K102 (47-49)	SPARE
03	47051	2K103 (47-50)	M19 COPY CUTTER (2)
04	47061	2K104 (47-51)	SPARE
05	47071	2K105 (47-52)	M20 EREC PU
06	47081	2K106 (47-53)	M21 FAST RESET (2)
07	47091	2K107 (47-54)	SPARE
UA1			
UA1			

X1

00	47131	2K110 (47-58)	M25 WATER
01	47141	2K111 (47-59)	SPARE
02	47151	2K112 (47-60)	SPARE
03	47161	2K113 (47-61)	SPARE
04	47171	2K114 (47-62)	SPARE
05	47181	2K115 (47-63)	SPARE
06	47191		SPARE — NOT USED
07	47201		SPARE — NOT USED
OV			
OV			

X2

00	47241	2K120 (47-68)	M12 THRUST
01	47251	2K121 (47-72)	M16 AUX
02	47261	2K122	SPARE
03	47271	2K123 (47-80)	M50 CONVEYOR (2)
04	47281	2K124	SPARE
05	47291	2K125	SPARE
06	47301	2K126	SPARE
07	47311	2K127 (47-85)	GAS ALARM
UA2			
UA2			

X3

00	47351	SPARE
01	47361	SPARE
02	47371	SPARE
03	47381	SPARE
04	47391	SPARE
05	47401	SPARE
06	47411	SPARE
07	47421	SPARE
OV		NOT USED
OV		NOT USED

120VAC CIRCUIT

5553 120VAC (5-55)

5562 N (5-56)

2K100:1 (47-02)	47471	2K101:1 (47-03)	47481	2K15 (3-43) 47482	2K15-O/L — SPARE 120V
2K102:1 (47-04)	47491	2K103:1 (47-05)	47501	2K19 (3-55) 47502	2K19-O/L — M15 PILOT — SPARE 120V — M19 COPY CUTTER (2)
2K104:1 (47-06)	47511	2K105:1 (47-07)	47521	2K20 (3-36) 47522	2K20-O/L — SPARE 120V — M20 EREC PU
2K106:1 (47-08)	47531	2K21 (3-49) 47532		2K21-O/L	M21 FAST RESET (2)
2K107:1 (47-09)	47541				SPARE 120V

2K110:1 (47-13)	47581	2K25 (4-64) 47582		2K25-O/L	M25 WATER
2K111:1 (47-14)	47591				SPARE 120V
2K112:1 (47-15)	47601				SPARE 120V
2K113:1 (47-16)	47611				SPARE 120V
2K114:1 (47-17)	47621				SPARE 120V
2K115:1 (47-18)	47631				SPARE 120V

SOFTSTART CIRCUIT

2SS12 (3-18) — 8, 9, 11 — M12 THRUST

2K120 (47-24)

2SS16 (3-24) — 8, 9, 11 — M16 AUX

2K121 (47-25)

2SS50 (3-30) (2) — 8, 9, 11 — M50 CONVEYOR

2K123 (47-27) 1K52:1 (7-33)

DC13

2K127:1(47-31) 47851

TUNNEL ALARM

COM1

TUNNEL GAS ALARMS (BY CUSTOMER- 24VDC, 5A MAX)

REV	DESCRIPTION	REVD BY/ DATE	APPD BY/ DATE
2	ADDED M19 AND M21, CHGD M26 TO M50	DBS 27SEP12	D.HOBBS 27SEP12
1	CHANGED SHEET NUMBERS	DBS 10JUL12	D.HOBBS 10JUL12

TITLE: ELECTRICAL SCHEMATIC SAN FRANCISCO

MACHINE	NEXT ASSY
EPB2016-376	1046350
EPB2016-377	1046350

UNLESS NOTED ALL DIMS ARE inch
TOLERANCES UNLESS NOTED
FRACTIONS±1/16 | X ±.03 | XX ±.015 | XXX ±.005 | ANGLES ±1 | FINISH 250
DIMENSIONS (X) ARE REFERENCE
ALL GEOMETRIC DIMENSIONING & TOLERANCING PER ANSI Y14.5-2009

SIZE D | DWG No. 1046646 | REV 2 | SHT 47 OF 51 | SCALE 1"0"=1'0" DO NOT SCALE

DRAWN BY P.BRENNAN DATE 3/6/2012 | CHECKED BY/ENGINEER P.BRENNAN CHECKED DESIGN 3/6/2012 | WEIGHT TOTAL | APPROVED BY D.HOBBS DATE 3/6/2012

Robbins

www.TheRobbinsCompany.com

1046646

PROPRIETARY NOTICE
The information disclosed hereon, in the sole property of Robbins Company, is for use only by employees of Robbins Company. By accepting this information, employee agrees to hold it in confidence and not to disclose it to any person, firm or corporation not employed by Robbins Company under the same condition. This material is not to be copied, reproduced, or used in any manner without the written permission of Robbins Company.

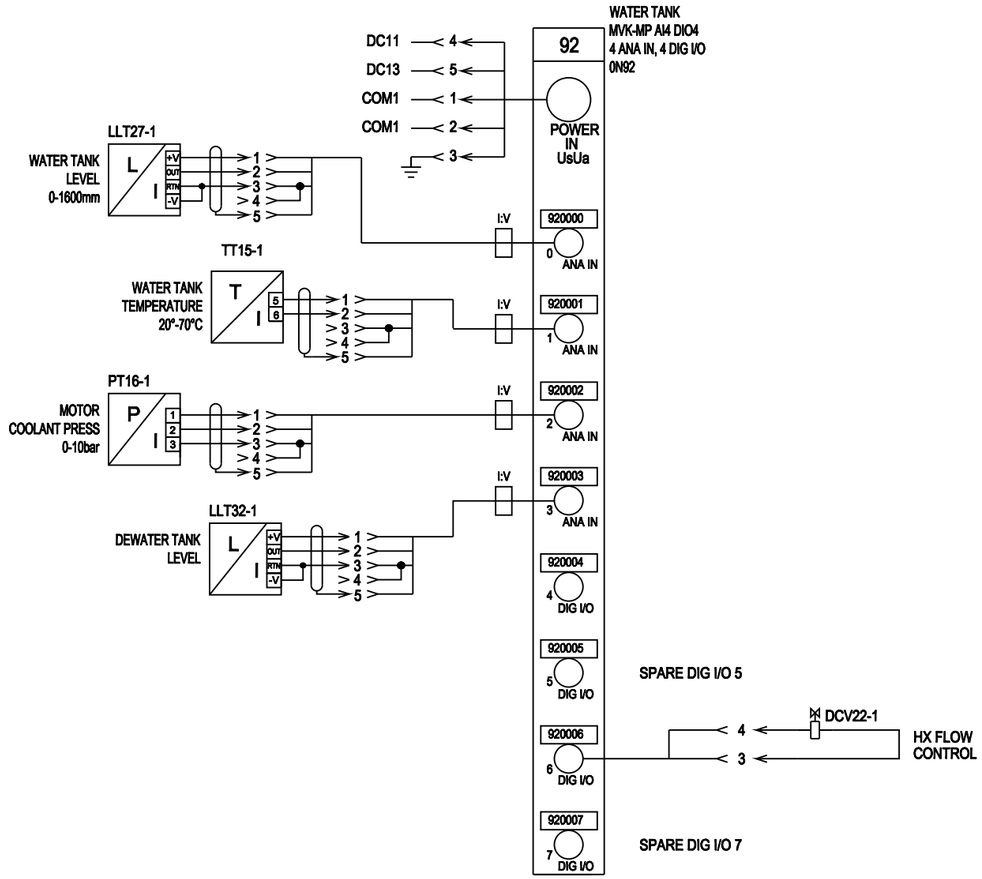

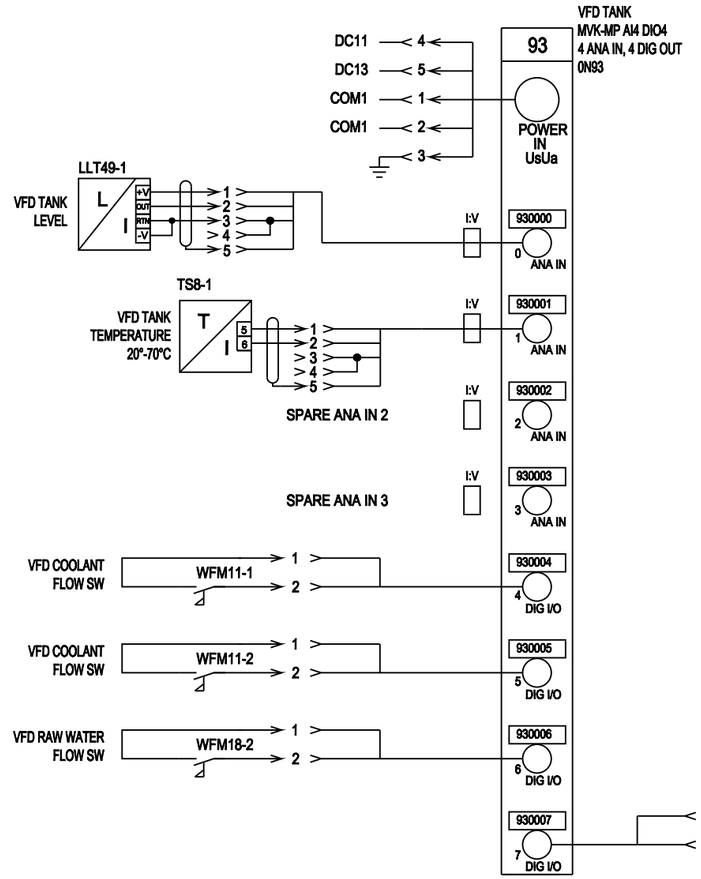

REV	DESCRIPTION	DRAWN BY / DATE	APPD BY / DATE
1	CHANGED SHEET NUMBERS	DBS 10JUL12	D.HOBBS 10JUL12

TITLE: ELECTRICAL SCHEMATIC SAN FRANCISCO

MACHINE	NEXT ASSY
EPB2016-376	1046350
EPB2016-377	1046350

UNLESS NOTED ALL DIMS ARE Inch
TOLERANCES UNLESS NOTED
FRACTIONS ± 1/16, .X ± .03, .XX ± .015, .XXX ± .005, ANGLES ± 1°, SURFACE FINISH 125
DIMENSIONS (XX) ARE REFERENCE.
ALL GEOMETRIC DIMENSIONING & TOLERANCING PER ANSI Y14.5-2009

SIZE D | DWG No. 1046646 | REV 1 | SHT 48 of 51 | SCALE 1"0"=1"0" DO NOT SCALE

DRAWN BY P.BRENNAN DATE 3/6/2012
CHECKED BY/CHECKED P.BRENNAN 3/6/2012
WEIGHT TOTAL
APPROVED BY D.HOBBS DATE 3/6/2012

Robbins

www.TheRobbinsCompany.com

1046646

PROPRIETARY NOTICE
This information disclosed herein, is the sole property of The Robbins Company. By accepting this information, it shall not be duplicated in full or part, used by or disclosed to any person, firm or corporation for any purpose whatsoever without the written permission of The Robbins Company. By accepting this information, it shall agree to hold The Robbins Company harmless from any injury arising from any use of this information. This material is on loan only, and is to be used in accordance with the terms of the Master Contract.

TBM/VFD INTERFACE — VFD CABINET FWD

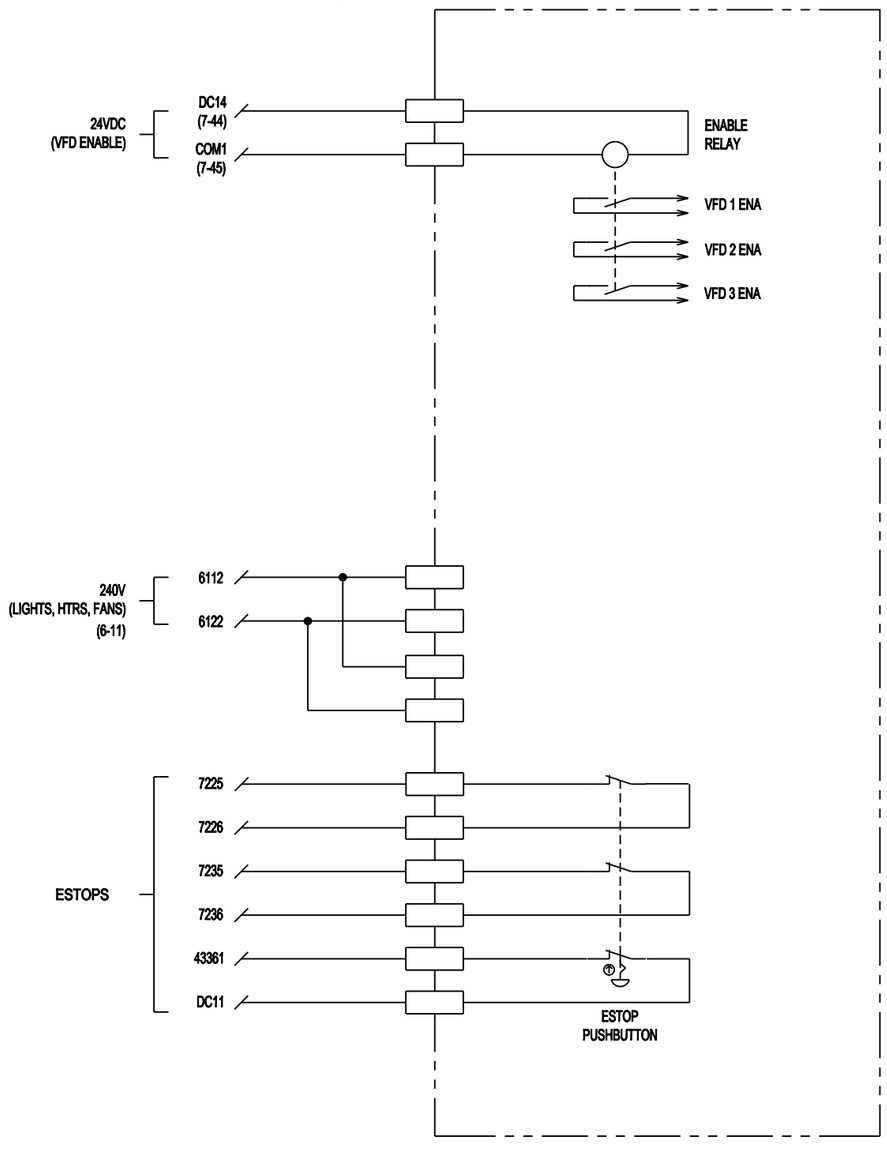

TBM/VFD INTERFACE — VFD CABINET AFT

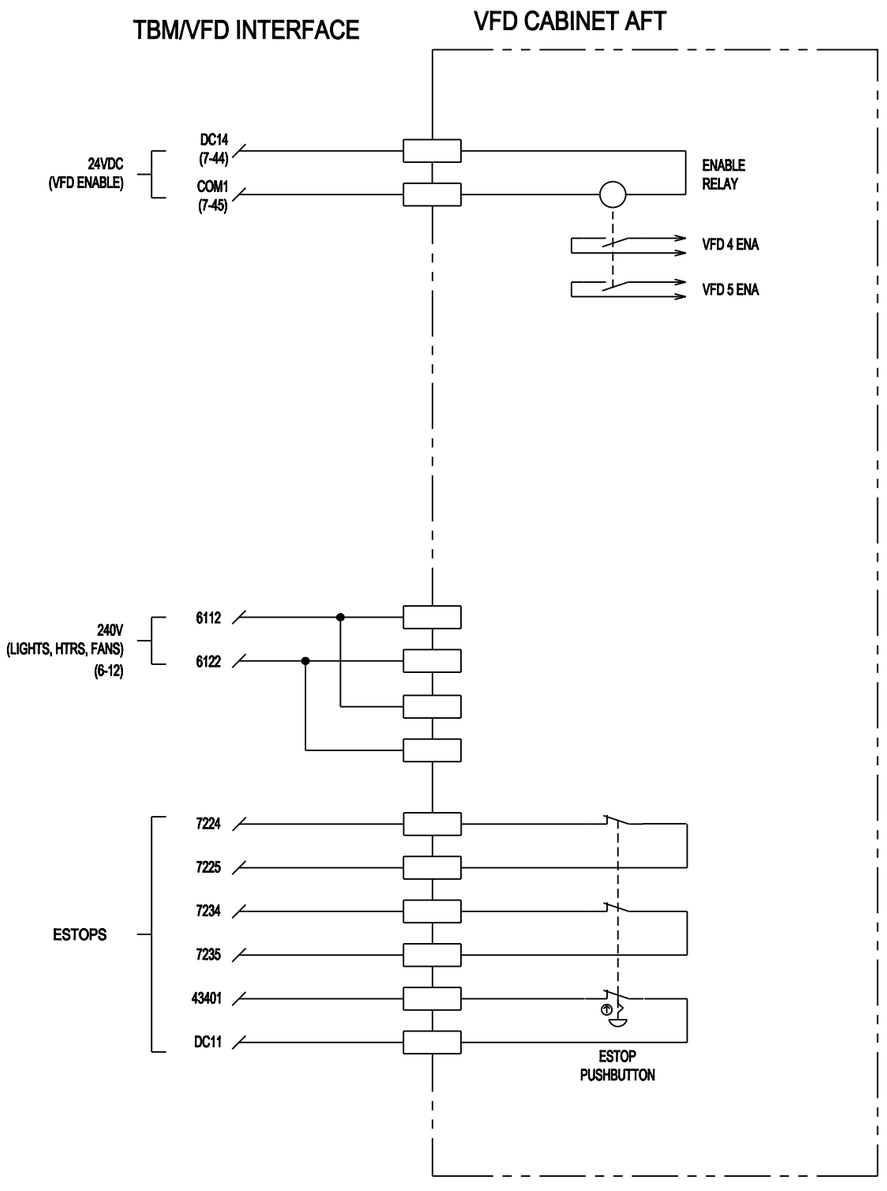

REV	DESCRIPTION	DBS 10JUL12	D.HOBBS 10JUL12
1	CHANGED SHEET NUMBERS	REVD BY DATE	APPD BY DATE

MACHINE	NEXT ASSY
EPB2016-376	1046350
EPB2016-377	1046350

UNLESS NOTED ALL DIMS ARE: Inch
TOLERANCES UNLESS NOTED
0 - 1" ± 1/64 | FRACTIONS/16
1" - 5" ± 1/8 | X ± .03
5" - 20" ± 1/4 | XX ± .015
20" + ± 1/2 | XXX ± .005
ANGLES ± 1
SURFACE 32√
DIMENSIONS (X) ARE REFERENCE.
ALL GEOMETRIC DIMENSIONING & TOLERANCING PER ANSI Y14.5-2009

PROPRIETARY NOTICE
This information disclosed herein, is the sole property of The Robbins Company. Any reproduction in part or as a whole without the written permission of The Robbins Company is prohibited. By accepting this information, recipient agrees to return it to The Robbins Company upon request and to not use it, except in the manufacture of equipment for The Robbins Company, under conditions no less restrictive than those contained herein. This notice is not to be removed. The Robbins Company

ELECTRICAL SCHEMATIC SAN FRANCISCO

SIZE	DWG No.	REV	SHT	SCALE
D	1046646	1	49 of 51	1"0"=1"0" DO NOT SCALE

DRAWN BY	CHECKED ENGINEER	WEIGHT TOTAL	APPROVED BY
P.BRENNAN	P.BRENNAN		D.HOBBS
DATE 3/6/2012	CHECKED DESIGN 3/6/2012		DATE 3/6/2012

Robbins

www.TheRobbinsCompany.com

1046646

50-01 50-02 50-03 50-04 50-05 50-06 50-07 50-08 50-09 50-10 50-11 50-12 50-13 50-14 50-15 50-16 50-17 50-18 50-19 50-20 50-21 50-22 50-23 50-24 50-25 50-26 50-27 50-28 50-29 50-30 50-31 50-32 50-33 50-34 50-35 50-36 50-37 50-38 50-39 50-40

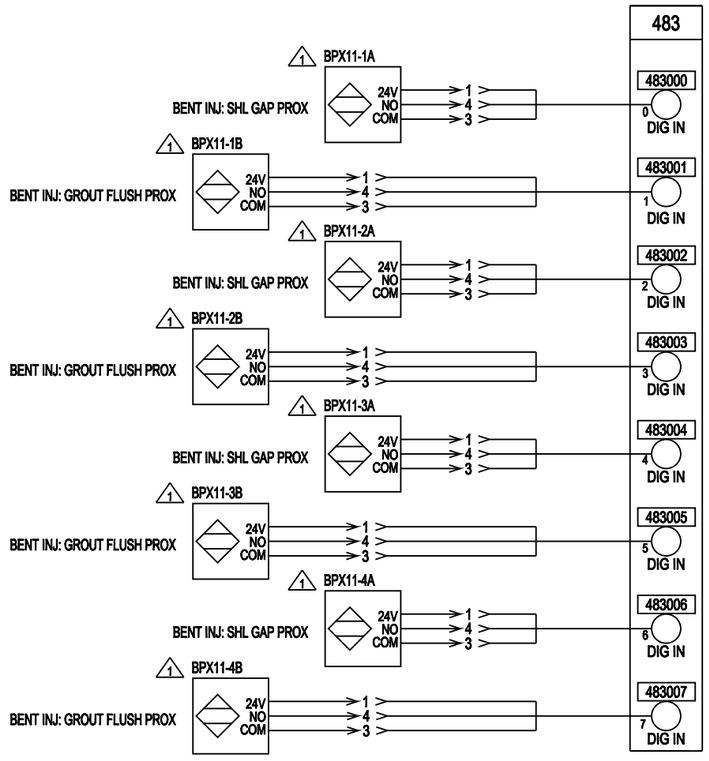

CHD SUPPORT RIGHT SIDE
DI16
8 DIG IN
6N483

50-41 50-42 50-43 50-44 50-45 50-46 50-47 50-48 50-49 50-50 50-51 50-52 50-53 50-54 50-55 50-56 50-57 50-58 50-59 50-60 50-61 50-62 50-63 50-64 50-65 50-66 50-67 50-68 50-69 50-70 50-71 50-72 50-73 50-74 50-75 50-76 50-77 50-78 50-79 50-80

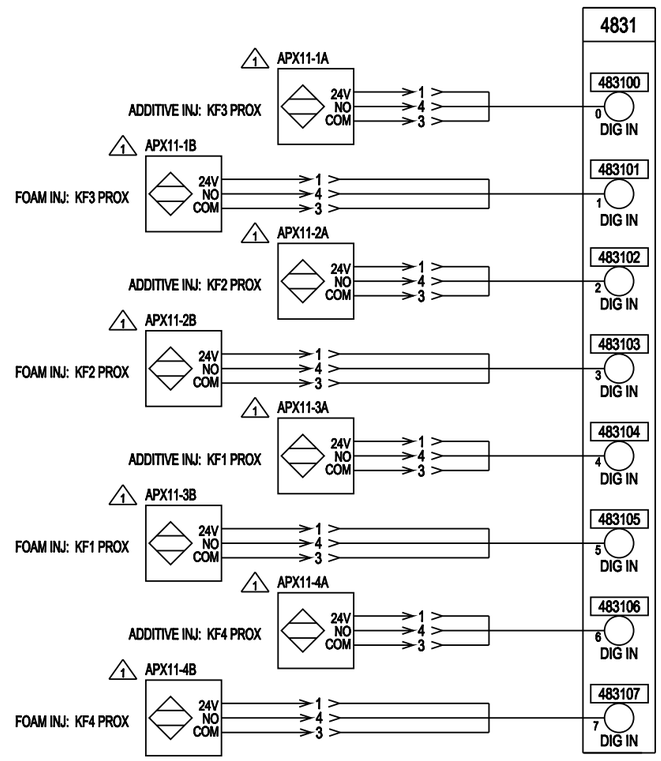

CHD SUPPORT RIGHT SIDE
DI16
8 DIG IN
6N4831

REV	DESCRIPTION	DBS	D.HOBBS
1	ADDED A AND B TO LABEL	27SEP12	27SEP12
		REV'D BY/ DATE	APP'D BY/ DATE

TITLE: ELECTRICAL SCHEMATIC SAN FRANCISCO

MACHINE	NEXT ASSY
EP62016-376	1046350
EP62016-377	1046350

UNLESS NOTED ALL DIMS ARE: Inch
TOLERANCES UNLESS NOTED
0 - 1" ± 1/64 | 1" - 5" ± 1/8 | 5" - 20" ± 1/4 | 20" + ± 1/2
FRACTIONS ± 1/16 | .X ± .03 | .XX ± .015 | .XXX ± .005 | ANGLES ± 1 | SURFACE 125
DIMENSIONS IN [ ] ARE REFERENCE
ALL GEOMETRIC DIMENSIONING & TOLERANCING PER ANSI Y14.5-2009

SIZE D | DWG No. 1046646 | REV 1 | SHT 50 OF 51 | SCALE 1"0"=1"0" | DO NOT SCALE
DRAWN BY D.SUMPTER | DATE 9JUL12
CHECKED BY/ENGINEER D.SUMPTER | CHECKED DESIGN 9JUL12
APPROVED BY D.HOBBS | DATE 17JUL12
WEIGHT TOTAL

Robbins
www.TheRobbinsCompany.com

1046646

PROPRIETARY NOTICE
The information disclosed herein, is the sole property of The Robbins Company. It is not to be used, copied, or disclosed to others for the benefit of a third party, except by or for disclosure to the Owner. By accepting this information, the Owner agrees to hold it in confidence and to use it only for the purpose for which it was furnished. Upon request, all copies of this information will be returned. Failure to comply with these conditions may result in claims for damages. This notice is not to be removed. Copyright © The Robbins Company.

51-01 51-02 51-03 51-04 51-05 51-06 51-07 51-08 51-09 51-10 51-11 51-12 51-13 51-14 51-15 51-16 51-17 51-18 51-19 51-20 51-21 51-22 51-23 51-24 51-25 51-26 51-27 51-28 51-29 51-30 51-31 51-32 51-33 51-34 51-35 51-36 51-37 51-38 51-39 51-40

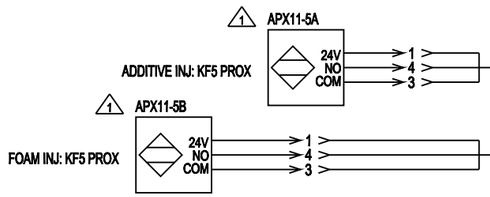

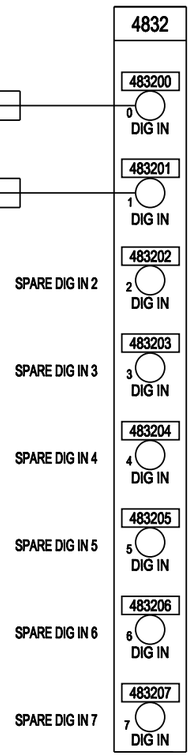

CHD SUPPORT RIGHT SIDE
DI16
8 DIG IN
6N4832

51-41 51-42 51-43 51-44 51-45 51-46 51-47 51-48 51-49 51-50 51-51 51-52 51-53 51-54 51-55 51-56 51-57 51-58 51-59 51-60 51-61 51-62 51-63 51-64 51-65 51-66 51-67 51-68 51-69 51-70 51-71 51-72 51-73 51-74 51-75 51-76 51-77 51-78 51-79 51-80

REV	DESCRIPTION	REVD BY / DATE	APP'D BY / DATE
1	CHANGED LABELS ON PROX SWITCHES	DBS 27SEP12	D.HOBBS 27SEP12

TITLE: ELECTRICAL SCHEMATIC SAN FRANCISCO

MACHINE	NEXT ASSY
EPB2016-376	1046350
EPB2016-377	1046350

UNLESS NOTED ALL DIMS ARE inch
TOLERANCES UNLESS NOTED
0 - 1" ± 1/16 | 1" - 3" ± 1/8 | 3" - 20" ± 1/4 | 20" + ± 1/2
FRACTIONS/16 | X ± .03 | XX ± .015 | XXX ± .005 | ANGLES ± 1 | SURFACE 250
DIMENSIONS (D) ARE REFERENCE
ALL GEOMETRIC DIMENSIONING & TOLERANCING PER ANSI Y14.5-2009

SIZE D | DWG No. 1046646 | REV 1 | SHT 51 OF 51 | SCALE 1/0"=1'0" | DO NOT SCALE
DRAWN BY D.SUMPTER DATE 9JUL12
CHECKED BY/DATE D.SUMPTER 9JUL12
WEIGHT/TOOL
APPROVED BY D.HOBBS DATE 17JUL12

Robbins
www.TheRobbinsCompany.com

1046646

PROPRIETARY NOTICE
This information disclosed hereon, in the sole property of The Robbins Company. Any reproduction in part or as a whole without the written permission of The Robbins Company is prohibited. By accepting this information, recipient agrees to not use it in any manner detrimental to the interest of The Robbins Company and to return it upon request. This drawing is to be used only for the purpose for which it was loaned by The Robbins Company and is to be returned if requested.

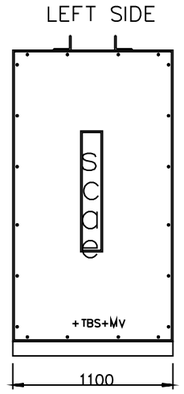

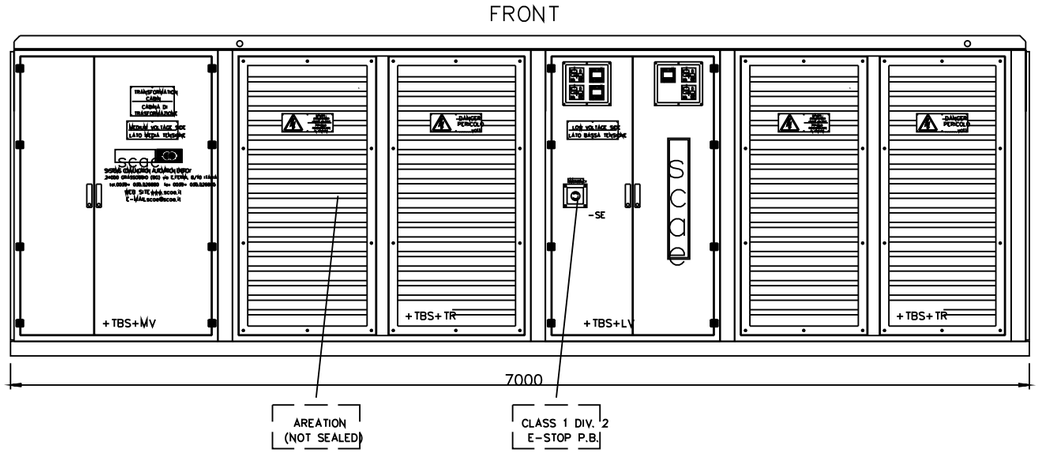

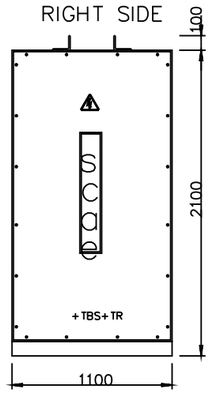

1 INCOMING LINE 13,2kV
2 OUTGOING LINES 690V / 480V
3 1"G AIR INLET PLATE (PURGING SYSTEM FOR MV COMPARTMENT)
4 1"G AIR INLET PLATE (PURGING SYSTEM FOR LV COMPARTMENT)

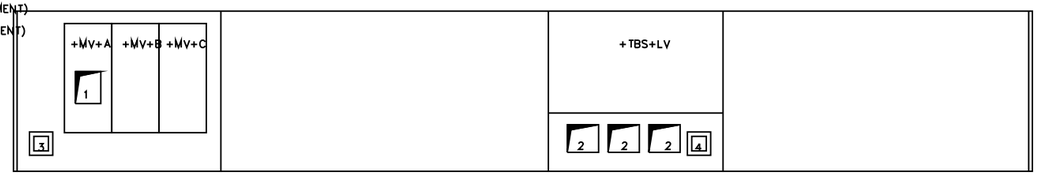

BOTTOM SECTION

CAST RESIN TRANSFORMER SUBSTATION ASSY REQUIREMENTS:

1

2X800kVA + 1X1250kVA, PROTECTION IP55.

TRANSFORMER 1 (DUAL SECONDARY, Dyn11-d0):

CAPACITY: 1600kVA (2x800kVA)
PRIMARY: 13,200V DELTA
HV PROTECTION: SF6 + FUSES + SHUNT TRIP
SECONDARY-1: 800kVA, 690V WYE WITH NEUTRAL
LV PROTECTION-1: 800A C/B WITH 24V UV TRIP
INSULATION FAULT MONITOR
SECONDARY-2: 800kVA, 690V DELTA
LV PROTECTION-2: 800A C/B WITH 24VDC UV TRIP
INSULATION FAULT MONITOR

TRANSFORMER 2 (Dyn11):

CAPACITY: 1250kVA
PRIMARY: 13,200V DELTA
SECONDARY: 480V WYE WITH NEUTRAL
HV PROTECTION SF6 + FUSES + SHUNT TRIP
LV PROTECTION: 2000A C/B WITH 24V UV TRIP
GROUND FAULT MONITOR ON NEUTRAL
PROVIDE 2000:5 CT FOR EXTERNAL PF CORR UNIT

6% IMPEDANCE

2X ±2.5% VOLTAGE ADJUST TAPS EACH TRANSFORMER

PROVIDE INTERNAL SHUNT TRIP POWER SUPPLY FOR SF6 SWITCHES

TEMPERATURE MONITOR, 4-20mA=0-240°C

CE APPROVED AND MARKED

AIR PURGING PREPARATION:
ROBBINS WILL PROVIDE AIR PURGE SYSTEM. ALL SUBSTATION COMPONENTS THAT PRODUCE AN ARC UNDER NORMAL CONDITIONS (C/B, CONTACTOR, PUSHBUTTON, ETC) MUST BE EITHER HERMETICALLY SEALED, OR INSTALLED IN A SEALED SUB-ENCLOSURE THAT IS CAPABLE OF HOLDING AIR PRESSURE (100Mbar).

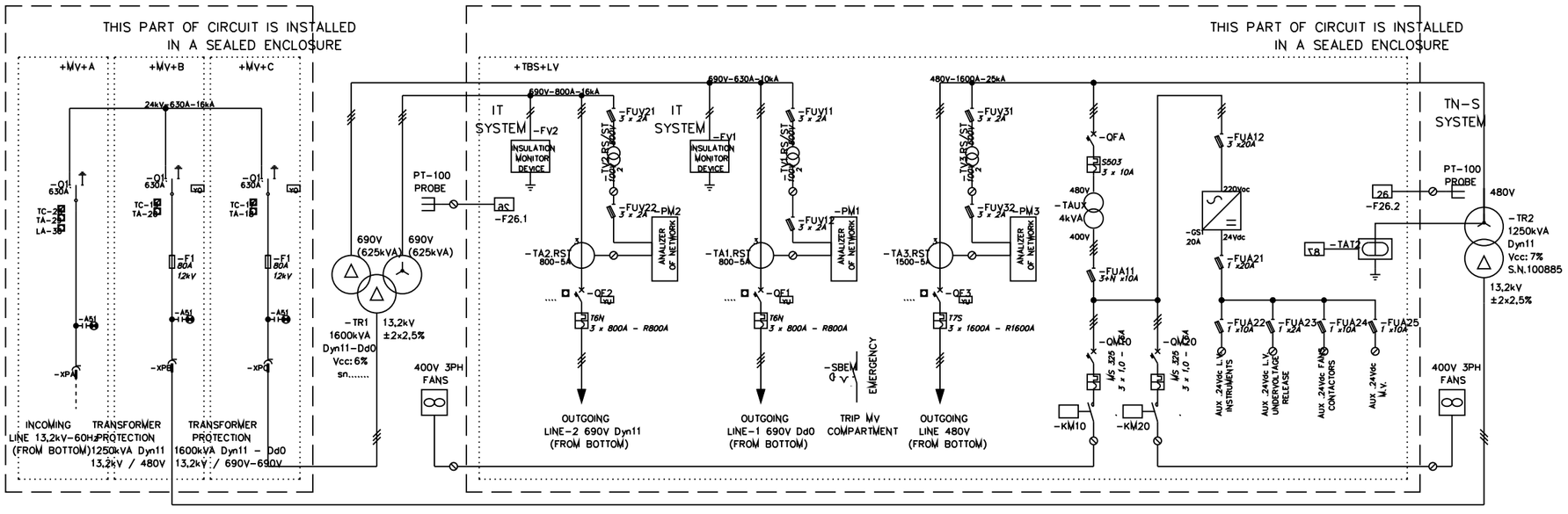

SINGLE LINE DIAGRAM

KEY FREE
KEY LOCKED
KEY FREE WITH CIRCUIT BREAKER CONNECTED
KEY FREE WITH DOOR CLOSED

TC = KEY FREE WITH SWITCH DISCONNECTO EARTH CLOSED
TA = KEY FREE WITH SWITCH DISCONNECTO EARTH OPEN
LA = KEY FREE WITH SWITCH DISCONNECTO LINE OPEN

REV	DESCRIPTION	REVD BY / DATE	APPD BY / DATE
2	REDRAWN PER VENDOR'S SUPPLIED DRAWING	D.SUMPTER 22MAY12	D.HOBBS 22MAY12
1	WAS 600kVA	D.SUMPTER 13FEB12	D.HOBBS 13FEB12

MACHINE	NEXT ASSY
EPB2016-376	
EPB2016-377	

UNLESS NOTED ALL DIMS ARE: mm
TOLERANCES UNLESS NOTED
X.000 ± 1.5 | X ± 1.5
.000-1500 ± .2 | .XX ± .13
1500-6000 ± 6 | .XXX ± .05
6000+ ± 12 | .XXXX ± .760
ANGLES ± 1
SURFACE 64
DIMENSIONS (X) ARE REFERENCE
ALL GEOMETRIC DIMENSIONING & TOLERANCING PER ANSI Y14.5-2009

TITLE: XFMR, 2X800 + 1250kVA 13.2kV:690/480V, 60Hz, PURGED
SIZE D | DWG No. 1046330 | REV 2 | UNIT 1 OF 1 | SCALE 1:20 DO NOT SCALE
DRAWN BY D.SUMPTER DATE 2FEB12
CHECKED BY/DATE D.SUMPTER
APPROVED BY D.HOBBS DATE 2FEB12
WEIGHT TOTAL 476kg

Robbins

www.TheRobbinsCompany.com

1046330

NOTES:

- ALL DEVICES TO BE LABELED ACCORDING TO THE SCHEMATICS.
- CONDUIT FOR THRU-DOOR VOLTAGE MONITOR TO BE MARKED "CAUTION 690V".
- INSURE COMMON CONNECTION FOR ALL GROUND WIRES TO CABINET GROUND AND EARTH GROUND.
- SET PROFI-BUS NODE ADDRESS ON EACH DRIVER CONTROL UNIT (RDCU). ADDRESS IS NOT SET THROUGH KEYPAD. (SEE TABLES BELOW)
- SHOP TO SUPPLY ALL LABELS AND LEGENDS.
- SHOP TO SUPPLY PLEXI-GLASS SHIELD OVER ANY UNPROTECTED AREA.
- 1 1 FIBER OPTIC CABLE, 30ft, IS USED TO INTERTIE MULTIPLE CABINETS. SHIP LOOSE INSIDE CABINET. FIELD INSTALL AS NECESSARY FOR MULTIPLE VFD CABINET LINEUPS. SEE SHEET 10.

2

QTY. -1	PART No.	DESCRIPTION	WT. EA. Kg	MATERIAL	ITEM
3	B118655-5	INVERTER, FAN UNIT KIT			44
3	B118655-27	KIT, MECH, R7i/R8i PLUG CONNECTORS + MECH			45
3	B118655-28	KIT MECH, R7i/R8i INVERTER FAN MOUNT			46
1	B118655-21	DSU, 380-690V, 1370kVA (115V,230V)			47
4	B118655-22	DSU CONTROL PANEL KIT + 3M CABLE			48
1	B118655-23	DSU, SOFTWARE, CONTROL PROGRAM			49
1	B118655-7	DSU MEASURING_IO KIT 0.5m OPTIC CABLE			50
1	B118655-9	DSU FAN UNIT KIT (FAN UNIT + CABLE) 230V, 50/60Hz			51
1	B118655-8	DSU CONTROL CABLE			52
1	B118655-29	KIT, MECH, DSU FAN MOUNT			53
1	B118655-24	DSU CHARGING KIT / 230V			54
1	B118655-11	DSU VOLTAGE TRANSDUCER KIT			55
6	B118655-18	FUSE DSU AC SUPPLY, 900A, 690V		404FU1,405,406 406,410,411	56
6	B118655-25	FUSE, INVERTER DC INPUT, 700A, 1250V		426FU1,2,3, 4,5,6,7,8,	57
4	B118655-26	FIBER OPTIC DOUBLE, 5M, 4 CONNECTORS.			58
2	B118655-31	KIT 205, MECH, R7i/R8i BUSBAR FUSE KIT FOR 2 MODULES			59
~~2~~	~~B118655-32~~	~~KIT 224, MECH, R7i/R8i SHROUD KIT~~			~~60~~
2	B118655-33	KIT 208, MECH, R7i/R8i TRAVERSE SUPPORT 600mm			61
1	B118655-34	KIT 15, MECH, DSU GUIDES 400mm			62
~~1~~	~~B118655-35~~	~~KIT 24, MECH, DSU SHROUT TOP AND BOTTOM 400mm~~			~~63~~
1	B118655-36	KIT 17, MECH, DSU AC BUS CONNECTION			64
2	A98079-6	HEATER, 200W, 230V, 50/60Hz W/THERMOSTAT		HTR1, 2	65
1	1028888	PUSHBUTTON, ESTOP, 30mm, 3NC/1NO			66
6	A99499-1	RELAY, 4 POLE, DUAL THROW, 24VDC, COIL & BASE		5K6,12,38,68,74,77	67
4	1030498	PROFIBUS, SUB-D, CONNECTOR			68
2	1033811	OUTLET, UNIVERSAL, 20A, 260V			69
~~1~~	~~A116065-3~~	~~WEATHERPROOF S.S. SINGLE GANG PLATE~~			~~70~~
1	A71935-8	BOX, WEATHERPROOF, FOR SINGLE GANG			71
1	A78734-1	POWER SUPPLY, 24VDC, 20A		PS1	72
1	A98068-9	CIRCUIT BREAKER, 20A, 1POLE		5Q66	73
2	A98069-7	CIRCUIT BREAKER, 15A, 2POLE		5Q27,59	74
1	A122350-24	LED CABLE CONNECTOR, END OF LINE			75
4	A122350-25	LED CABLE CONNECTOR, UNIT TO UNIT			76
1	1034760	SUPPORT FRAME FOR UNIVERSAL OUTLET			77
45ft	A99009-13	CABLE, 4/0 SINGLE COND			78
25ft	A99009-2	CABLE, #4 SINGLE COND			79
18ft	A99009-14	CABLE, #14 SINGLE COND			80
42ft	A99009-15	CABLE, #10 SINGLE COND			81
1	1045715-1	ACRYLIC SHEET, 48x96x0.177			82
7	1045716-2	ERIFLEX FLEXIBAR, 3MTC 3X32X1,3M			83
1	1045661-1	FIBER OPTIC CABLE, SINGLE PLASTIC, 30ft			84
3	A104467-1	ENCLOSURE, NEMA 4, 12"X10"X6"			85

QTY. -1	PART No.	DESCRIPTION	WT. EA. kg	MATERIAL	ITEM
-	D123245-1	VFD CABINET ASSEMBLY, EPB 3-DRIVE			1
1	A122350-1	SINGLE DOOR ENCLOSURE W/PANEL 2000X800X600			2
2	A122350-2	SINGLE DOOR ENCLOSURE W/OUT PANEL 2000X600X600			3
1	A122350-20	SINGLE DOOR ENCLOSURE W/O PANEL 2000 (H) X 400 (W) X 600 (D)			4
1	A122350-4	SINGLE DOOR ENCLOSURE W/PANEL 2000X600X600			5
1	A122350-5	SIDEWALL 2000X600			6
1	A122350-6	DIVIDER PANEL 2000X502			7
1	A122350-7	FRONT & REAR PLINTH 100X800			8
3	A122350-8	FRONT & REAR PLINTH 100X600			9
1 1	A122350-9	FRONT & REAR PLINTH 100X400			10
3 1	4	A122350-10	SIDE PLINTH 100X569		11
1	A122350-11	VERTICAL BAYING ATTACHMENT			12
4	A122350-12	CORNER BAYING BRACKET			13
4	A122350-13	FLAT BAYING BRACKET			14
1 1	A122350-14	EYEBOLT INTERCONNECTION BRACKET			15
5	A122350-15	DELUXE HANDLE			16
1 ~~5~~	~~A122350-16~~	~~PUSHBUTTON INSERT, DELUXE HANDLE~~			~~17~~
4	A122350-17	DOOR SWITCH KIT			18
1	A122350-18	20 L.E.D. LIGHT SYSTEM, 24VDC			19
4	A122350-19	30 L.E.D. LIGHT SYSTEM, 24VDC			20
1pk	A122350-21	PLINTH BAYING BRACKETS 20/pk			21
6pk	A122350-22	TS BAYING QUICK WEDGE 6/pk			22
4	A122350-23	TOP BAYING COVER			23
2	A122381-1	BUSBAR, 525mm, 3200A			24
2	A122381-3	BUSBAR, 925mm, 3200A			25
2	A122409-1	CONNECTOR BUSBAR			26
1 8	A122380-1	SUPPORT BUSBAR, 3200A MAXI-PLS			27
1 2	A122383-2	CLAMP, CONNECTOR 20X63mm BAR			28
3	A122384-1	TERMINAL STUD, M12			29
2	A122410-1	SNAP NUT			30
1	B122310-1	DISCONNECT SWITCH ASSEMBLY, 1200A, 690V			31
2	A122292-1	CONTACTOR, 690V, 3P, NON-REVERSING		5K54,56	32
2	A122292-2	TERMINAL LUG KIT		5K54,56	33
1	A121470-1	RELAY, VOLTAGE MONITOR		OVR1	34
2	A122291-1	THRU DOOR VOLTAGE INDICATOR (FLUSH MOUNT)			35
2	A122291-2	6ft #10 NTW CONDUIT			36
1 ~~2~~	~~A122291-3~~	~~30mm TO 1 1/4: R 3W CONDUIT/ADAPTER~~			~~37~~
3	B118655-19	INVERTER, 315kW, 690V,347A/+du/dt			38
4	B118655-2	INVERTER/DSU, DRIVE CONTROL UNIT + CABLES			39
3	B118655-20	INVERTER, SOFTWARE, STANDARD APPL (+N664)			40
3	B118655-3	INVERTER, DDCS COMMUNICATION BOARD 3			41
1 ~~1~~	~~A70301-1~~	~~LIGHT SWITCH, ASSY, 1P~~			~~42~~
4	B118655-4	INVERTER, PROFIBUS DP ADAPTER			43

SHT	REV
10	1
9	0
8	0
7	0
6	0
5	0
4	0
3	2
2	1
1	3

REV	DESCRIPTION	BY/DATE
3	UPDATED REVISION STATUS CHG'D QTY ITEM 69 WAS 1	DBS 23MAR12
2	CHG'D QTY ITEM 69 WAS 1 DELETED DAB MODE ADDRESS LABEL	DBS 3FEB12
1	UPDATED PER ECO 4108 DELETED ITEMS 17,37,42&63, CHGS QTYS, ADDED ITEMS 78-85 ADDED FLAGE NOTE 1 REV SHT 2&3	DBS 28OCT11

PROPRIETARY NOTICE
The information disclosed herein, is the sole property of The Robbins Company, and is not to be published, or shall not be duplicated in full or part, used by, or disclosed to others for any purpose without the written consent of The Robbins Company. By accepting this information, recipient agrees to place it under the strictest confidence, and to use it only for the purpose for which it was intended. This material is on loan only, and is to be returned upon request by The Robbins Company.

TOLERANCES UNLESS NOTED
FRAC (mm) 0-300 ±1.5; 300-1500 ±5; 1500-6000 ±6; 6000+ ±12
FLAME CUT 303/CLASS
WELDING 303/CLASS
MACHINING (mm) x ±1.5; x.x ±1.0; x.xx ±.40; x.xxx ±.100; ANGLES ±1°
SURFACE FINISH 32
BRAZING 303/CLASS

MACHINE | NEXT ASSY
UNLESS NOTED, ALL DIM'S ARE mm
DO NOT SCALE
THIRD ANGLE PROJECTION
ALL GEOMETRIC DIMENSIONING AND TOLERANCING PER ISO R1101 - 1983
DIMS (in) ARE REF
SCALE 1:1

TITLE: VFD CABINET ASSEMBLY EPB, 3-DRIVE
SIZE D | DWG No D123245 | REV 3 | SHT 1 OF 10 | ORION Spec Rel Pkg's
DRAWN DSAMPTER DATE 19OCT11 | CHECKED BJDONOVAN DATE 19OCT11

Robbins
THE ROBBINS COMPANY
29100 Hall Street
Solon, Ohio 44139 USA
Phone: (440) 248-3303
Fax: (440) 248-1702
Kent, WA: Phone (253) 872-0500 Fax: (253) 872-0199
Oak Hill, WV: Phone (304) 465-5880 Fax: (304) 465-5886

D123245

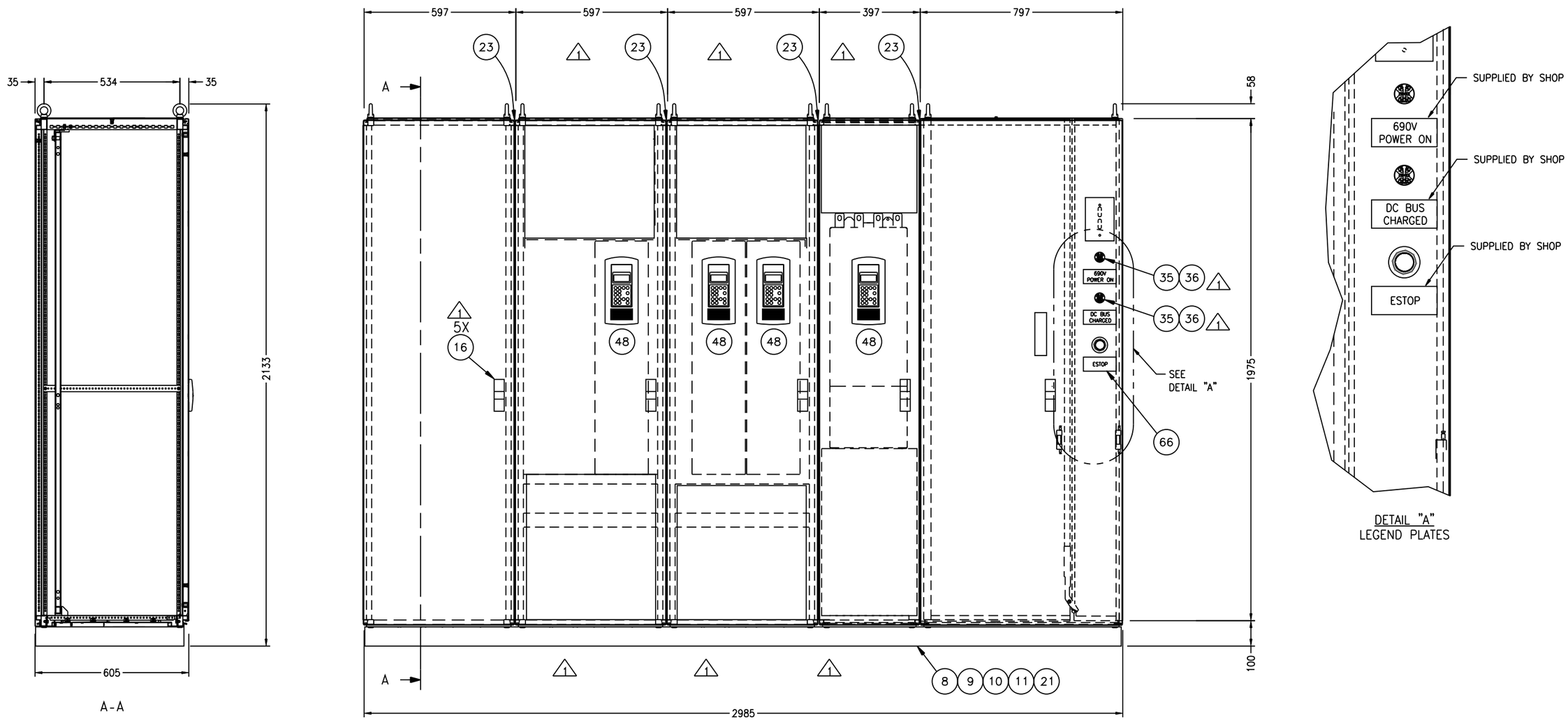

QTY. -1	PART No.	DESCRIPTION	WT. EA. kg	MATERIAL	ITEM

D123245

REV	DESCRIPTION	ZONE	BY/DATE
1	REMOVED BALLONS 17,37,60,67		DBS 20DEC11

PROPRIETARY NOTICE

The information disclosed hereon, is the sole property of the Robbins Company, and remains the sole property, it shall not be duplicated in full or part, used by, or disclosed to any other party without the prior written consent of the Robbins Company. By accepting this information, recipient agrees to abide in total with this notice, without any modification whatsoever to the conditions. This material is on loan only, and is to be returned upon request to the Robbins Company.

TOLERANCES UNLESS NOTED	
FAB (mm)	0-300 ±1.5
	300-1500 ±3
	1500-6000 ±6
	6000+ ±12
FLAME CUT STD/CLASS	
WELDING STD/CLASS	
MACHINING (mm)	X ±1.5
	X.X ±1.0
	X.XX ±.40
	X.XXX ±.100
	ANGLES ±1°
	SURFACE FINISH 3.2
BRAZING STD/CLASS	

MACHINE | NEXT ASSY

UNLESS NOTED, ALL DIM'S ARE mm

DO NOT SCALE

THIRD ANGLE PROJECTION

ALL GEOMETRIC DIMENSIONING AND TOLERANCING PER ISO R1101 - 1983

DIMS (X) ARE REF

SCALE 1:1

TITLE

VFD CABINET ASSEMBLY EPB, 3-DRIVE

SIZE D | DWG No D123245 | REV 1 | SHT 2 OF 10 | ORIGIN Solon Kent Oak Hill RC

Phone: (440) 248-3303
Fax: (440) 248-1702

Robbins
THE ROBBINS COMPANY
29100 Hall Street
Solon, Ohio 44139 USA

DRAWN D.SUMPTER DATE 19OCT11
CHECKED B.DONOVAN DATE 19OCT11

Kent, WA:
Phone (253) 872-0500
Fax: (253) 872-0199
Oak Hill, WV:
Phone (304) 465-5880
Fax: (304) 465-5886

QTY. -1	PART No.	DESCRIPTION	WT. EA. kg	MATERIAL	ITEM

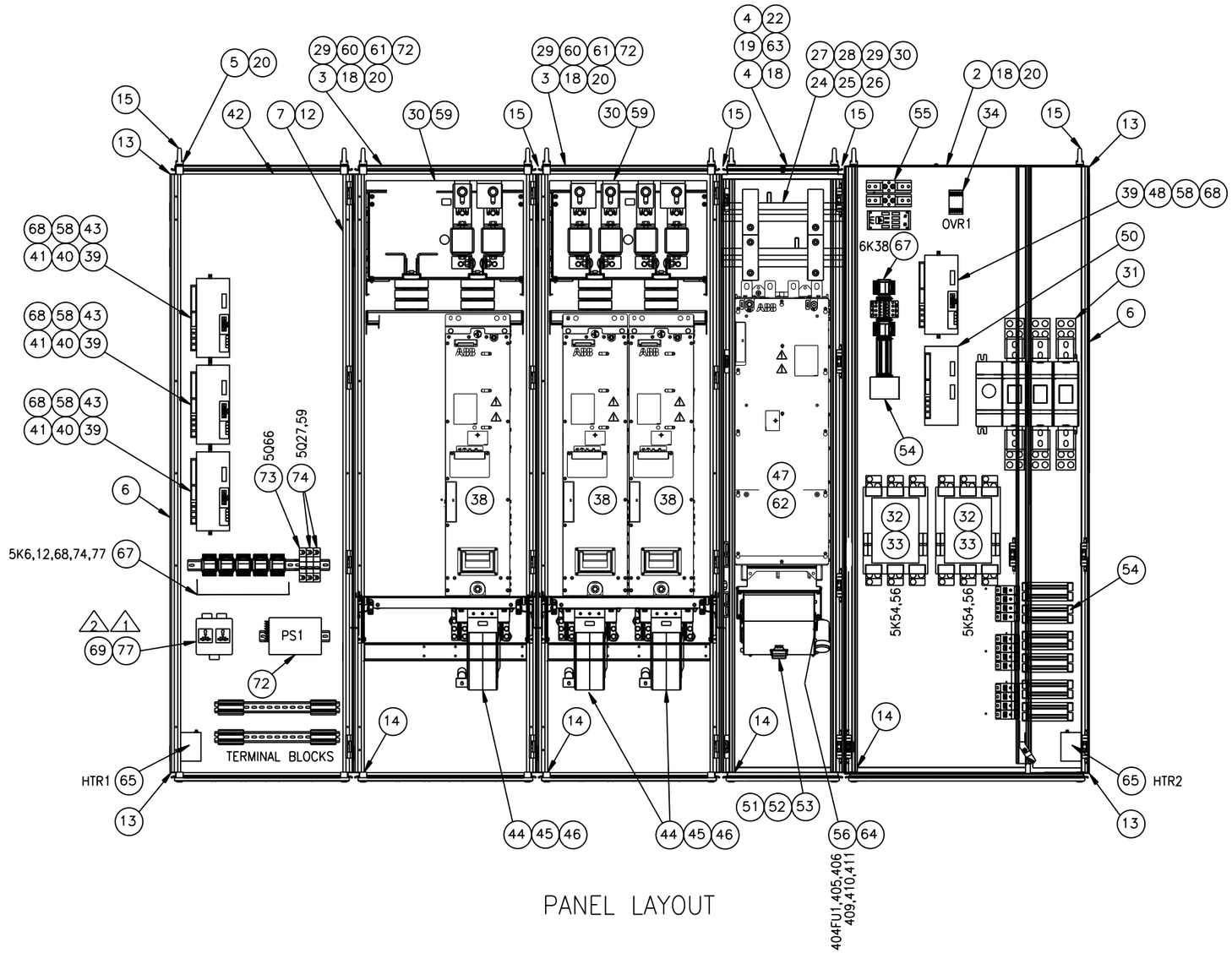

PANEL LAYOUT

REV	DESCRIPTION	ZONE	BY / DATE
2	DWG CHANGE, ADDED SECOND OUTLET		DBS 190CT11
1	CHANGED ITEM CALL OUT TO 10 17		DBS 200CT11

PROPRIETARY NOTICE
The information disclosed herein, is the sole property of The Robbins Company, and is considered proprietary. It shall not be duplicated in full or part, used by or disclosed outside the recipient's organization without the consent of the Robbins Company. By accepting this information, the recipient agrees to abide by this notice. Unauthorized use, duplication or disclosure may be subject to civil and criminal penalties. This material is on loan only, and is to be returned upon request by The Robbins Company.

TOLERANCES UNLESS NOTED	
FAB (mm) 0–300	±1.5
300–1500	±3
1500–6000	±6
6000+	±12
FLAME CUT SRD/CLASS	
WELDING SRD/CLASS	
MACHINING (mm) x	±1.5
x.x	±1.0
x.xx	±.40
x.xxx	±.100
ANGLES	±1 °
SURFACE FINISH	32
BEARING SRD/CLASS	

MACHINE	NEXT ASSY
UNLESS NOTED, ALL DIM'S ARE mm	
DO NOT SCALE	
THIRD ANGLE PROJECTION	
ALL GEOMETRIC DIMENSIONING AND TOLERANCING PER ISO R1101 – 1983 DIMS (X) ARE REF	SCALE 1:1

TITLE
VFD CABINET ASSEMBLY EPB, 3–DRIVE

SIZE	DWG No	REV	SHT	ORIGIN
D	D123245	2	3 OF 10	

Phone: (440) 248-3303
Fax: (440) 248-1702
THE ROBBINS COMPANY
29100 Hall Street
Solon, Ohio 44139 USA
Kent, WA:
Phone (253) 872-0500
Fax: (253) 872-0199
Oak Hill, WV:
Phone (304) 465-5880
Fax: (304) 465-5886

ORIGIN	CHECKED
D.SUMPTER 190CT11	B.DONNOVAN 190CT11

D123245

NOTES:

1. WIRE PER MACHINE SCHEMATIC.
2. ALL COMPONENTS SHALL BE IDENTIFIED BY LABELS.
3. ALL TERMINALS AND WIRING ABOVE 55 VOLTS SHALL BE PROTECTED AGAINST ELECTRICAL SHOCK (DIRECT AND INDIRECT CONTACT), BY USE OF INSULATED BARRIERS AND SHIELDS.
4. CERTIFY AND MARK ASSEMBLY AS CE COMPLIANT.
5. PROVIDE (12) X 2-1/2" DIA. (2" CONDUIT TRADE SIZE) HOLE IN APPROX. POSITION AS SHOWN. PLUG WITH SEAL PLUG.
6. PROVIDE (12) X 1-3/8" DIA. (1-1/4" CONDUIT TRADE SIZE) HOLE IN APPROX. POSITION AS SHOWN. PLUG WITH SEAL PLUG.
7. PROVIDE (12) X 7/8" DIA. (1/2" CONDUIT TRADE SIZE) HOLE IN APPROX. POSITION AS SHOWN. PLUG WITH SEAL PLUG.
8. PHYSICAL LAYOUT SHOWN IS GENERAL ONLY. CABINET BUILDER CAN RE-ARRANGE COMPONENTS LAYOUT AS REQUIRED.

	QTY	PART No.	DESCRIPTION	DWG No.	Component/Vendor ID	ITEM
	1	A116347-2	CUBE20 DIG OUT PROFIBUS		1N802	38
	2	A116347-4	CUBE20 ANA IN PROFIBUS		1N803, 804	39
	1	1028504	CABLE, JUMPER, 120VAC , 5FT	1028500		40
	2	1028502	LAMP, CABINET, LED, 489mm	1028500		41
	1	1028505	CONNECTOR, END TO END	1028500		42
	5	A98079-10	DOOR SWITCH			43
	1	1028506	SWITCHED CABLE AND TERMINATOR	1028500		44
	1	A98079-5	HEATER, 200W, 120V WITH THERMOSTAT			45
	300	1029672	TERMINAL BLOCK, GREY	1029720		46
	10	1029675	END SECTION GREY	1029720		47
	10	1029677	END STOP, 36mm	1029720		48
	2	1029679	DINRAIL 2 METER	1029720		49
	10	1029676	JUMPER, 10 POLE	1029720		50
	1	A39666-1	VOLTMETER, 0-600V		1P01	51
	1	1028888	PUSHBUTTON, ESTOP, 30mm, 3 NC / 1 NO	1028888		52
	1	A90638-6	INDICATOR LIGHT RED, 24V		1H92	53
	1	1030709	FLANGE HANDLE, S7 FRAME	1030700		54
	1	1030703	FLANGE MECHANISM, S7 FRAME	1030700		55
	1	1030717	CABLE, 48", S7 FRAME	1030700		56
	-					57
	1	1030605	ALUMINUM PLATE 300x700			58
	12	1027670	SEAL PLUG, 2" CONDUIT HOLE	1027662		59
	12	1027668	SEAL PLUG, 1-1/4" CONDUIT HOLE	1027662		60
	12	1027664	SEAL PLUG, 1/2" CONDUIT HOLE	1027662		61
5	3	A98083-1	DIODE SUPPRESSOR		1K50-52	62
6	1	A122909-1	VOLTAGE MONITOR, 3PH 600V		1B96	63
7	1	A121807-1	RELAY, 30A, DPDT, 24VDC COIL		1K55	64
	1	A7258	TRANSFORMER, POTENTIAL 4:1		1T02	65
	1	A108562-143	NIPPLE, 1-1/2" X 8" PIPE			67
1	1	1045366	BUSS BAR COMPONENTS, ASSY, RITTAL			68

QTY	PART No.	DESCRIPTION	DWG No.	Component/Vendor ID	ITEM
1	B122266-4	SOFTSTART, 55KW, 104A		1K18	1
1	D117527-1	ENCL, 2500x1700x400, 5DR, LH FLG			2
1	A93352-4	CIRCUIT BREAKER, 1200A, 3P		1Q01	3
2	A93352-3	LUG KIT, S7		1Q01	4
2	A93366-7	TERMINAL COVER		1Q01	5
2	1027557	CIRCUIT BREAKER, 250A, GF, T4	1027530	1Q13, 14	6
1	1027544	CIRCUIT BREAKER, 100A, GF, T3	1027532	1Q31	7
4	1027539	CIRCUIT BREAKER, 50A GF, T2	1027531	1Q39, 40, 41, 42	8
2	1027537	CIRCUIT BREAKER, 30A, GF, T2	1027531	1Q32, 33	9
1	1027538	CIRCUIT BREAKER, 40A, GF, T2	1027531	1Q22	10
4	1027534	CIRCUIT BREAKER, 15A, GF, T2	1027531	1Q24, 11, 17, 38	11
3	A98068-7	CIRCUIT BREAKER, 15A 1POLE		1Q102, 103, 104	12
2	A98068-4	CIRCUIT BREAKER, 5A, 1POLE		1Q101, 141	13
1	1027556	CIRCUIT BREAKER, 200A, GF, T4		1Q18	14
2	B122266-5	SOFTSTART, 75KW, 130A		1SS13, 14	15
6	B122266-10	LUG KIT, SOFTSTART PSE142-170		1SS13, 14, 18	16
3	B122266-12	TERMINAL SHIELD, SOFTSTART PSE142-170		1SS13, 14, 18	17
1	A108214-2	STARTER, 1.6-2.4A, IEC, 690V, 120V COIL		1K24	18
2	A108214-1	STARTER, 0.18KW, 690V, 120V COIL		1K17, 11	19
1	A108214-7	STARTER, 16-24A, IEC, 690V, 120V COIL		1K22	20
1	A78734-1	POWER SUPPLY, 20A, 24VDC		1G01	21
1	A110102-5	POWER DISTR BLOCK, 620A 3P			22
3	A104506-6	CONTACTOR, 4 POLE, 24VDC		1K50-52	23
20	1030023	RELAY, 1PDT, 24VDC	1030073	1K100-107, 1K110-113, 1K120-127	24
1	1028332	RELAY, SAFETY EXPANDER, 4 NO / 1 NC		1K46	25
2	1028204	RELAY, SAFTY, 24V, 3 NO / 1 NC		1K45, 47	26
1	1047080-1	PURGE SYSTEM WITH EXP PRESSURE LOSS ALARM SWITCH	1047080		27
1	1047080-5	1/2" FLUSH CONNECTOR	1047080		28
4	1047461-5	LOCKNUT, 1-1/2" SEALING			29
1	A108369-10	FUSE HOLDER 1-1/2x13/32, 1 POLE		1F95	30
3	A99193-2	FUSE, 1A CLASS J		1F92-94	31
1	A99508-5	FUSE TIME DELAY, 0.25A, 250V		1F95	32
1	A108369-3	FUSE HOLDER, 3P, 30A CLASS J		1F92-94	33
2	A117566-1	GROUND BUS			34
1	A116347-3	CUBE20 BUSNODE PROFIBUS		1N80	35
1	1030498	PROFIBUS CONNECTOR		1N80	36
1	A116347-1	CUBE20 DIG IN PROFIBUS		1N801	37

SHT	REV
3	0
2	0
1	1

REV	DESCRIPTION	REVD BY / DATE	APP'D BY / DATE
1	ADDED ITEM 68 TO BOM	PMB 5/14/2012	DH 5/14/2012

PROPRIETORY NOTICE
This information disclosure is the property of The Robbins Company and remains their sole property. It shall not be used, disclosed to others or reproduced without the express written consent of The Robbins Company. Any such unauthorized use or disclosure shall render the user liable for damages. This notice shall not be removed or altered in any way. Unpublished - All rights reserved under the Copyright laws of the United States. This drawing is submitted on a confidential basis and is not to be returned upon request to The Robbins Company.

MACHINE	NEXT ASSY
EMB2016-376/377	1046350

UNLESS NOTED ALL DIMS ARE mm

TOLERANCES UNLESS NOTED

DECIMALS		ANGLES
X	± 1.5	
X.X	± 1.0	
X.XX	± .40	
X.XXX	± .100	
		± 1°

SURFACE √

DIMENSIONS (X) ARE REFERENCE

ALL GEOMETRIC DIMENSIONING & TOLERANCING PER ANSI Y14.5-2009

MAIN ELECTRICAL CABINET FWD ASSY, SAN FRANCISCO

SIZE	DWG No.	REV	SHT	SCALE
D	1047441	1	1 / 3	1:10 DO NOT SCALE

DRAWN BY: P.BRENNAN
DATE: 4/13/2012
CHECKED DESIGN: P.BRENNAN
CHECKED DESIGN: D.HOBBS
WEIGHT TOTAL:
APPROVED BY: D.HOBBS
DATE: 4/13/2012

Robbins

www.TheRobbinsCompany.com

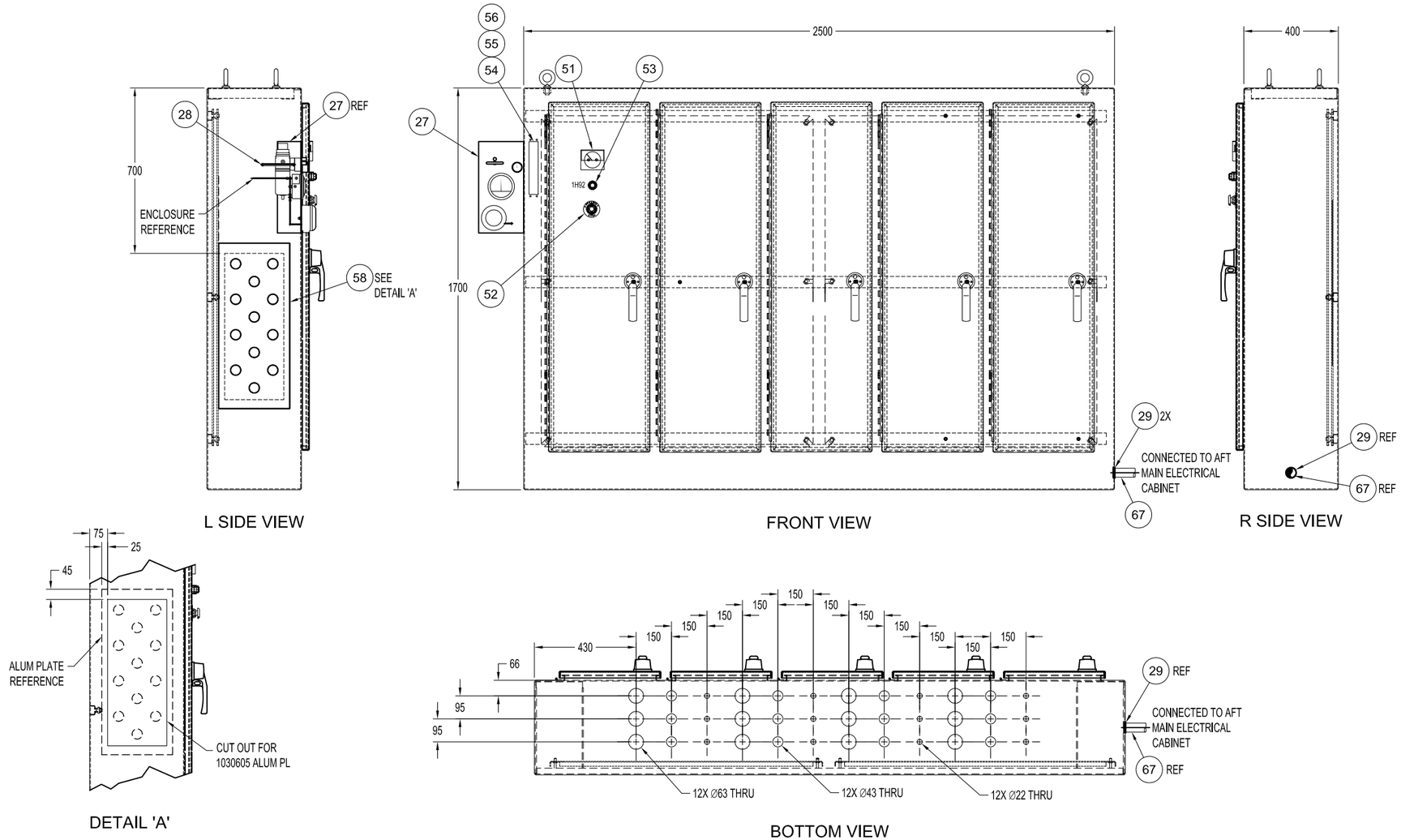

L SIDE VIEW

FRONT VIEW

R SIDE VIEW

DETAIL 'A'

BOTTOM VIEW

1047441

REV	DESCRIPTION	REV'D BY/ DATE	APP'D BY/ DATE

TITLE: MAIN ELECTRICAL CABINET FWD ASSY, SAN FRANCISCO

MACHINE	NEXT ASSY
EPB2016-376/377	1046350

UNLESS NOTED ALL DIMS ARE mm

TOLERANCES UNLESS NOTED

FAB (mm)		MACHINING (mm)	
0-300	± 1.5	X	± 1.5
300-1500	± 3	X.X	± 1.0
1500-6000	± 6	X.XX	± .40
6000+	± 12	X.XXX	± .100
		ANGLES	± 1
		SURFACE	63

THIRD ANGLE PROJECTION

DIMENSIONS (X) ARE REFERENCE

ALL GEOMETRIC DIMENSIONING & TOLERANCING PER ANSI Y14.5-2009

SIZE	DWG No.	REV	SHT	SCALE
D	1047441	0	2 OF 3	1:10

DO NOT SCALE

DRAWN BY	CHECKED STANDARDS
P.BRENNAN	P.BRENNAN
DATE 4/13/2012	CHECKED DESIGN D.HOBBS
WEIGHT TOTAL	APPROVED BY D.HOBBS
	DATE 4/13/2012

Robbins

www.TheRobbinsCompany.com

PROPRIETARY NOTICE
The information disclosed herein is the sole property of The Robbins Company and remains the sole property. It shall not be copied, used in any part, used by or disclosed to any other party without prior written consent of The Robbins Company. By accepting this information, recipient agrees to abide in the terms of the Robbins Company Proprietary Information Agreement and to the conditions that material is not liable only, whatsoever to the conditions. This material is not liable only, and is to be returned upon request to The Robbins Company.

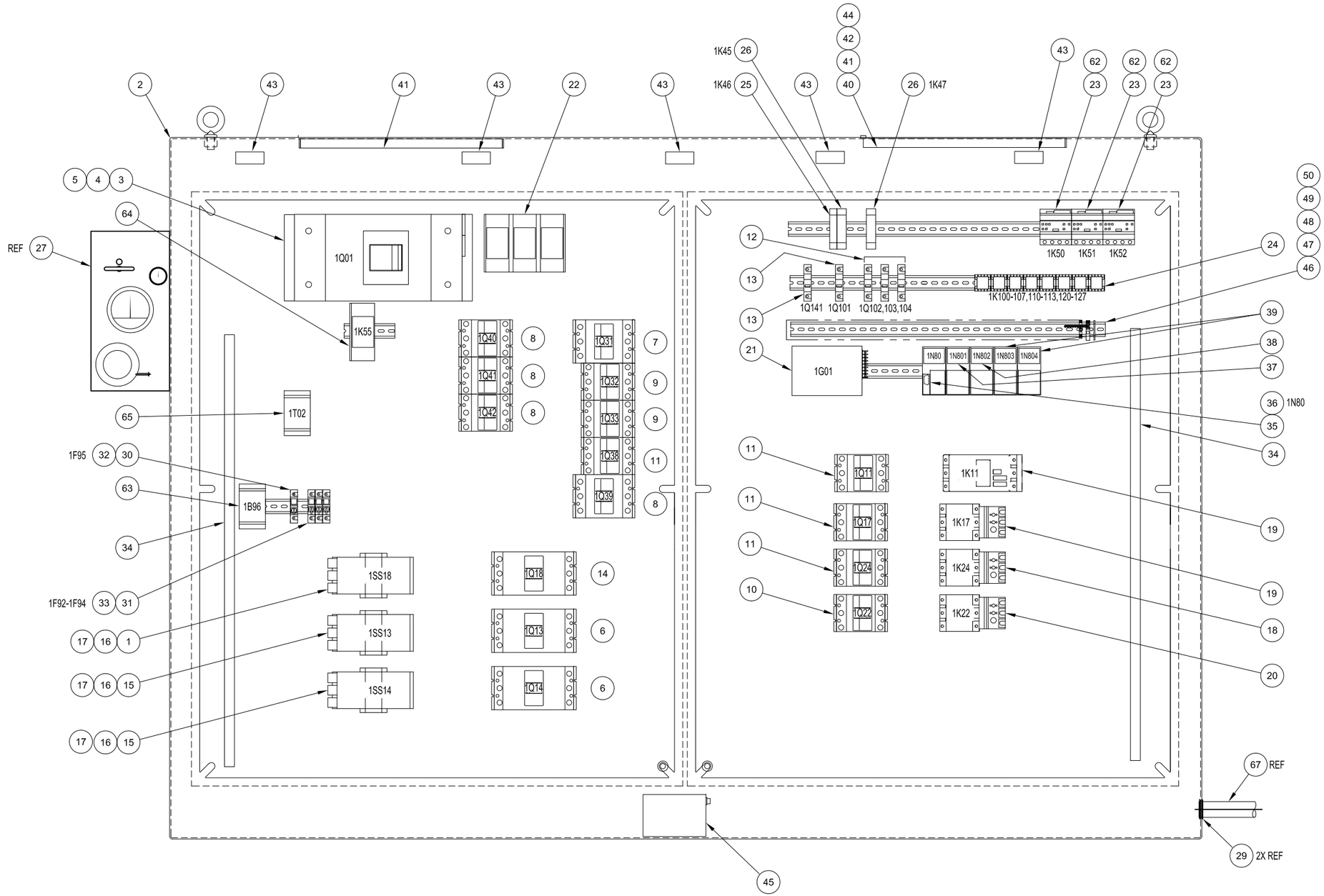

FRONT VIEW - PANEL LAYOUT

REV	DESCRIPTION	REV'D BY/ DATE	APP'D BY/ DATE

TITLE: MAIN ELECTRICAL CABINET FWD ASSY, SAN FRANCISCO

MACHINE	NEXT ASSY
EPB2016-376/377	1046350

UNLESS NOTED ALL DIMS ARE mm

TOLERANCES UNLESS NOTED

FAB (mm)		MACHINING (mm)	
0-300	± 1.5	X	± 1.5
300-1500	± 3	X.X	± 1.0
1500-6000	± 6	X.XX	± .40
6000+	± 12	X.XXX	± .100
		ANGLES	± 1
		SURFACE FINISH	0.3

THIRD ANGLE PROJECTION

DIMENSIONS (X) ARE REFERENCE

ALL GEOMETRIC DIMENSIONING & TOLERANCING PER ANSI Y14.5-2009

SIZE	DWG No.	REV	SHT	SCALE
D	1047441	0	3 OF 3	1:5 DO NOT SCALE

DRAWN BY	CHECKED STANDARDS
P.BRENNAN	P.BRENNAN
DATE 4/13/2012	CHECKED DESIGN D.HOBBS
WEIGHT TOTAL	APPROVED BY D.HOBBS
	DATE 4/13/2012

Robbins

www.TheRobbinsCompany.com

PROPRIETARY NOTICE
The information disclosed herein is the sole property of The Robbins Company, and remains the sole property. It shall not be used in full or part, used by, or disclosed to any other party without prior written consent of The Robbins Company. By accepting this information, recipient agrees to abide the terms with this notice, without any modification whatsoever to the conditions. This material is not to be used in any manner or for any purpose to the Robbins Company.

1047441

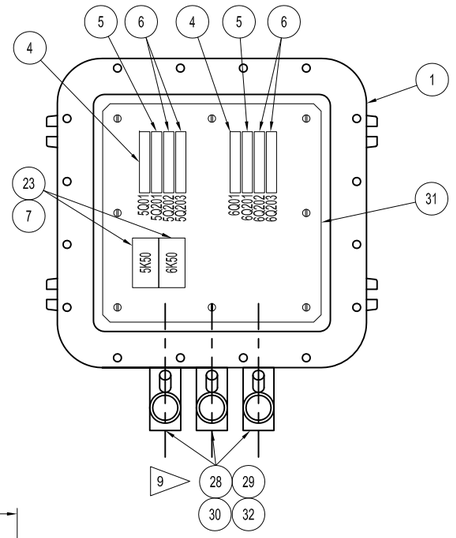

NOTES:

1. MOUNT IN DOOR.
2. WIRE PER MACHINE SCHEMATIC.
3. REFER TO PLC INSTALLATION DRAWING.
4. ALL COMPONENTS SHALL BE IDENTIFIED BY LABELS.
5. ALL TERMINALS AND WIRING ABOVE 55 VOLTS SHALL BE PROTECTED AGAINST ELECTRICAL SHOCK (DIRECT AND INDIRECT CONTACT), BY USE OF INSULATED BARRIERS AND SHIELDS.
6. CERTIFY AND MARK ASSEMBLY AS CE COMPLIANT.
7. PHYSICAL LAYOUT IS GENERAL ONLY. CABINET BUILDER CAN RE-ARRANGE COMPONENT LAYOUT AS REQUIRED.
8. DEVICE SETTINGS - FOLLOW RED LION IFMA INSTRUCTIONS (www.redlion.net)
   - SECTION 1.0: SET FOR 4-20MA
   - SECTION 2.0: [N/A]
   - SECTION 3.0: 100.00 HZ (RESOLUTION = 2)
   - SECTION 4.0: 100 MSEC
   - SECTION 5.0: 200 MSEC
9. USE #12 AWG 6 CONDUCTORS SOW FLEXIBLE CABLE OR EQUAL.

QTY	PART No.	DESCRIPTION	DWG No.	Component/Vendor ID	ITEM
1	A99569-4	EXPLOSION PROOF ENCLOSURE 16x16x8	A99569		1
1	D71683-77	PANEL, 45x27, #A-48P30	D71683		2
1	D71683-76	BOX JUNCTION, 48x30x10	D71683		3
2	A98068-6	CIRCUIT BREAKER, 10A 1 POLE	A98068	5Q01, 6Q01	4
2	A98068-7	CIRCUIT BREAKER, 15A 1 POLE	A98068	5Q201, 6Q201	5
4	A98068-9	CIRCUIT BREAKER, 20A 1 POLE	A98068	5Q202, 5Q203 6Q202, 6Q203	6
2	A104506-6	CONTACTOR, 3 POL+AUX 24VDC	A104506	5K50, 6K50	7
3 1	A116347-3	CUBE20 BUSNODE, PROFIBUS	A116347	5N20	8
3 1	A116347-7	CUBE20 DIGITAL I/O MODULE, 16 IN/16 OUT	A116347	5N201	9
3 1	A116347-4	CUBE20 ANA IN 4CH PROFIBUS	A116347	5N202	10
3 2	A116347-5	CUBE20 ANA OUT 4CH PROFIBUS	A116347	5N203, 5N204	11
1	1030498	PROFIBUS CONNECTOR, 90°	1030498		12
2	1029679	DINRAIL, 2 METER	1029720		13
3	1029680	WIRE DUCT, W/COVER, WHITE	1029720		14
3	1029682	MARKER, TB CARD (100CT)	1029720		15
10	1029677	END STOP, 36mm	1029720		16
8	1029675	END SECTION GREY	1029720		17
300	1029672	TERMINAL BLOCK, GREY	1029720		18
8	1029673	GROUND BLOCK	1029720		19
2	A78734-4	POWER SUPPLY, 24VDC, 40A	A78734	5G01, 6G01	20
1 1	B74867-4	ESTOP MAINTAINED 1 NO/1 NC	B74867		21
16	1035268	RELAY, TB 1PDT, 24VDC, 5A, CL1/DIV2	1035271	5K100-107 5K110-117	22
2	A98083-1	DIODE SUPPRESSOR	A98083	5K50, 6K50	23
8 1	A120619-1	FREQ TO ANALOG CONVERTER	A120619	5B01	24
REF	A114510-1	CONTROLLER, ELEC PROP VALVE, KC	A114510	PVC147	25
2	A113131-1	CONTACT BLOCK 1 NO/1 NC	A113131		26
1	A79309-5	ESTOP LEGEND RING, 70MM PLASTIC YELLOW/RED	A79309		27
3	A110249-3	XP SEAL OFF FITTING MALE-FEMALE, 1"	A110249		28
3	A110249-11	ADACO SEALING CEMENT 16oz	A110249		29
3	A110249-12	ADACO PACKING FIBER 16oz	A110249		30
1	A99569-5	STEEL BACKPAN, 16x16	A99569		31
6	A78250-6	CORD GRIP 19-22mm, 1"	A78250		32
3	1027159	XP BARRIER, 16PT, RELAY, 24VDC	1027159	5Y01, 5Y02, 5Y03	33
3 1	A116347-1	CUBE20 DIGITAL I/O MODULE, 32 INPUT	A116347	5N205	34
1 REF	A111946-1	AMPLIFIER CARD	A111946	PDV148-1	35

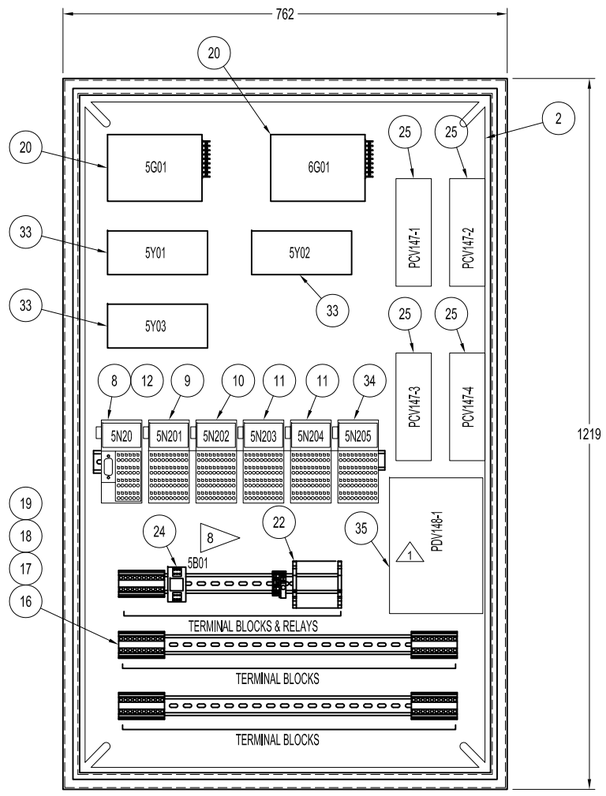

FRONT VIEW - DOOR NOT SHOWN

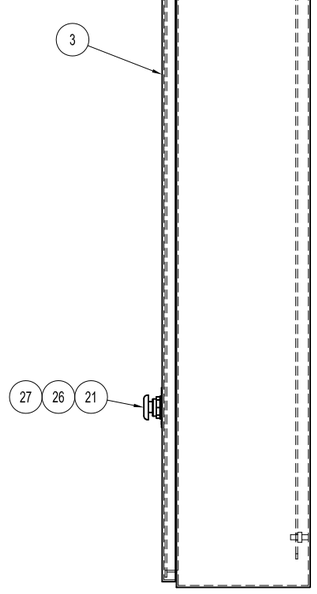

SIDE VIEW

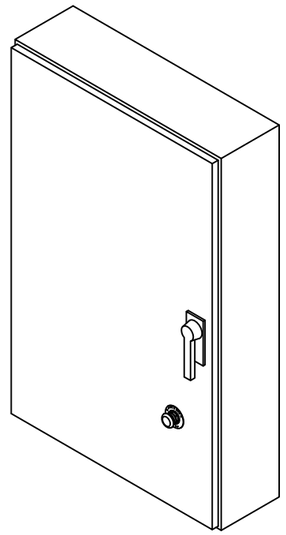

ISO VIEW

REV	DESCRIPTION	REV'D BY / DATE	APP'D BY / DATE
1	ADDED ITEM 35 TO THE BOM AND DWG NUMBER AND WEIGHT	PMB 8/16/12	DH 8/16/12

PROPRIETARY NOTICE
This information disclosed hereon is the valid property of The Robbins Company and is considered confidential. It shall not be duplicated in full or part, used by, or disclosed to any person, firm or corporation for any purpose whatsoever by the Company. By accepting this information, recipient agrees to the above restrictions and agrees to return this information upon request by the Company. This material is protected by the Copyright laws of the United States.

MACHINE	NEXT ASSY
EPB2016-376	1046350
EPB2016-377	1046350

UNLESS NOTED ALL DIMS ARE mm
TOLERANCES UNLESS NOTED
0-300 ± 1/2
300-1500 ± 3
1500-6000 ± 6
6000+ ± 12
THIRD ANGLE PROJECTION
DIMENSIONS (X) ARE REFERENCE
ALL GEOMETRIC DIMENSIONING & TOLERANCING PER ANSI Y14.5-2009
DECIMALS: X ± 1/2, X.X ± 1/2, X.XX ± .40, X.XXX ± .100, ANGLES ± 1, SURFACE 125

TBM CABINET ASSEMBLY CLASS 1 DIV 2

SIZE D | DWG No. 1046619 | REV 1 | SHT 1 OF 1 | SCALE 1:5 DO NOT SCALE

DRAWN BY P.BRENNAN DATE 5/1/2012
CHECKED STANDARDS P.BRENNAN
CHECKED DESIGN D.HOBBS
WEIGHT TOTAL: 125
APPROVED BY D.HOBBS DATE 5/1/2012

Robbins

www.TheRobbinsCompany.com

1046619

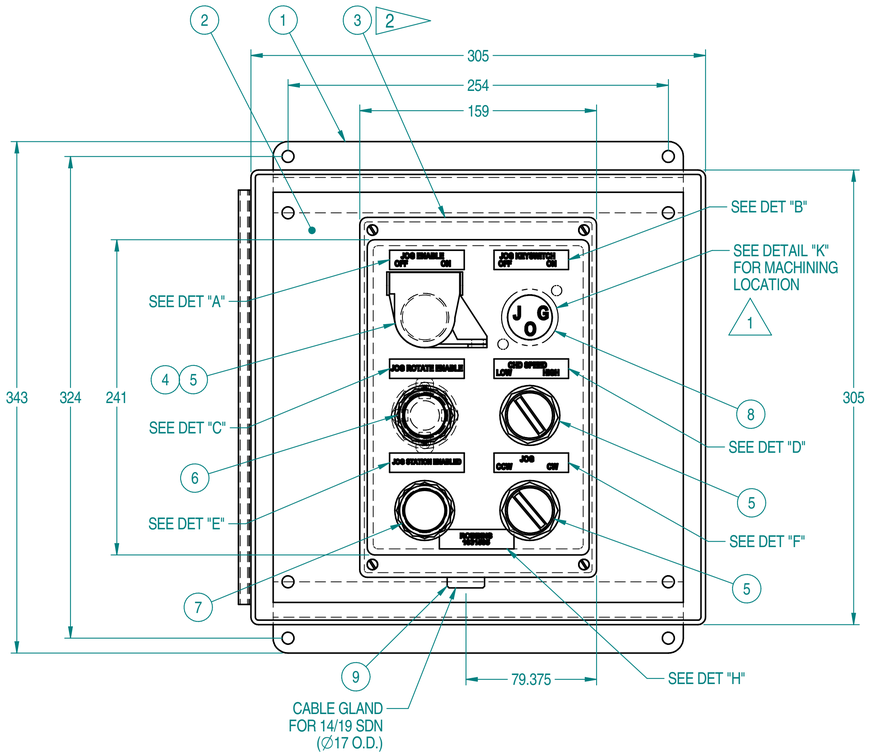

FRONT VIEW - DOOR NOT SHOWN

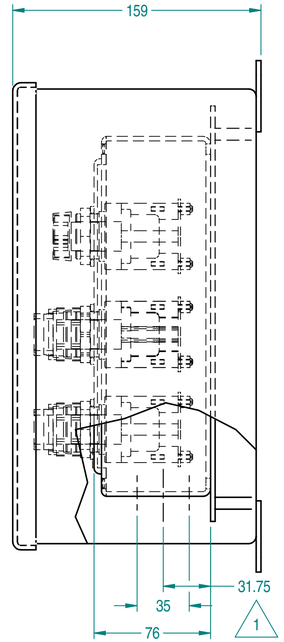

SIDE VIEW

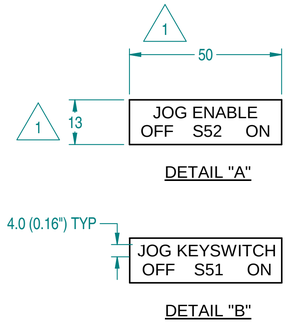

QTY	PART No.	DESCRIPTION	DWG No.	COMP. ID	ITEM
1	A33059-44	ENCLOSURE 304.8X304.8 (12X12)			1
1	A33059-47	PANEL, 304.8X304.8 (12X12)			2
1	A71090-6	PUSHBUTTON ENCLOSURE			3
1	A72547-1	PADLOCKING ATTACHMENT			4
3	A8075-1	SELECTOR SWITCH 2 POS			5
1	A8586-1	PUSHBUTTON			6
1	A15199-1	SWITCH, ILLUMINATED, PB, GREEN			7
1	A99651-3	SELECTOR KEYSWITCH (CASTELL)			8
1	A76111-13	CABLE GLAND			9

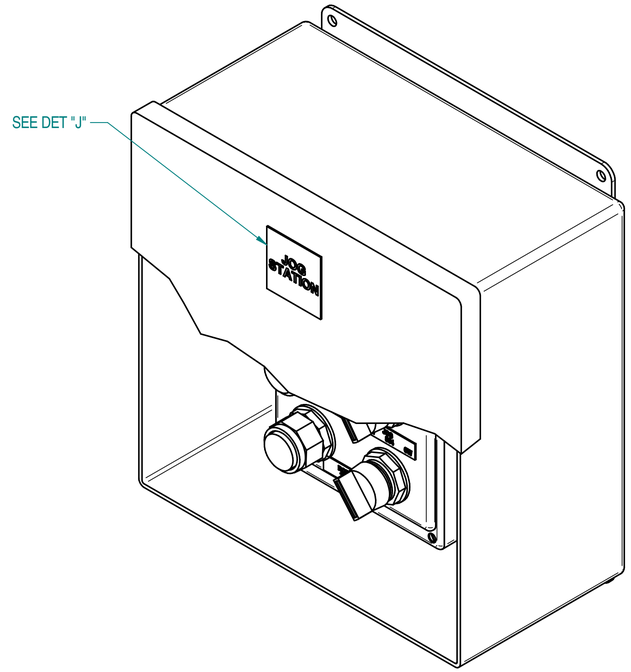

ISO VIEW

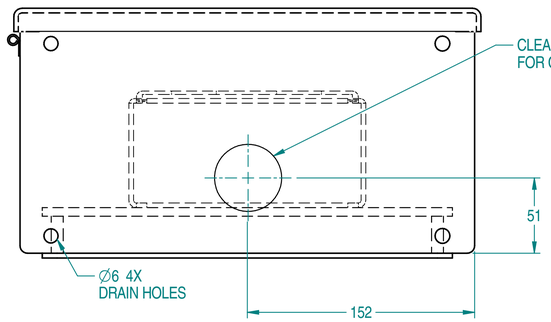

BOTTOM VIEW

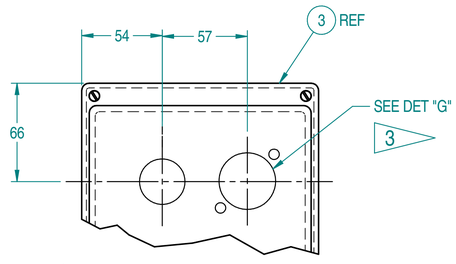

DETAIL "K"

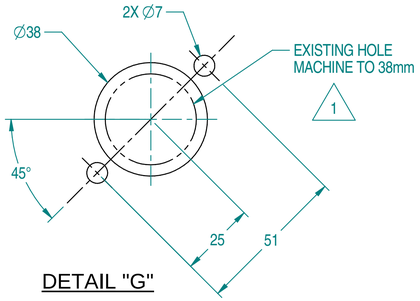

DETAIL "G"

NOTES:

1. LABELS TO BE BLACK LETTERING ON WHITE PHENOLIC.
2. ATTACH ITEM 3 TO ITEM 2 WITH SCREWS.
3. INCREASE DIAMETER OF HOLE TO 38mm TO ALLOW MOUNTING OF CASTELL SWITCH

DBS 3NOV11	CORRECTED PART NUMBERS ITEMS 5 AND 8		
DBS 8/2/09	CHG'D DIM'S ON TABLES WAS 70mm & 140mm, ADDED DETAILS H, I, AND K. ADDED DIM FOR MACHINING LOCATION. ADDED ITEM 9 AND DIM FOR LOCATION CORRECTED DIM FOR CABLE GLAND		
BY/ DATE	DESCRIPTION	REV	

PROPRIETARY NOTICE
The information disclosed herein is the property of The Robbins Company, and remains their sole property. It shall not be duplicated in full or part, used or disclosed to others for any purpose without the written consent of The Robbins Company. By accepting this information, recipient agrees to abide in total to the conditions. This material is on loan only, and is to be returned upon request to The Robbins Company.

MACHINE	NEXT ASSY
-	-

UNLESS NOTED ALL DIMS ARE mm

TOLERANCES UNLESS NOTED

FAB (mm)		MACHINING (mm)	
0-300	±1.5	X	±1.5
300-1500	±3	X.X	±1.0
1500-6000	±6	X.XX	±.40
6000+	±12	X.XXX	±.100
		ANGLES	±1°
		SURFACE FINISH	3.2

ALL GEOMETRIC DIMENSIONING AND TOLERANCING PER ANSI Y14.5M-1982 AS APPLICABLE.

TITLE: JOG STATION ASSEMBLY

SIZE	DWG No.	REV	SHT	SCALE:
D	1029016	2	1 OF 1	SEE DETAIL, DO NOT SCALE

DRAWN: DSUMPTER DATE 4/9/09

CHECKED: LLINDBERGH DATE 4/9/09

DIMS (X) ARE REF.

WEIGHT TOTAL:

Robbins

1029016

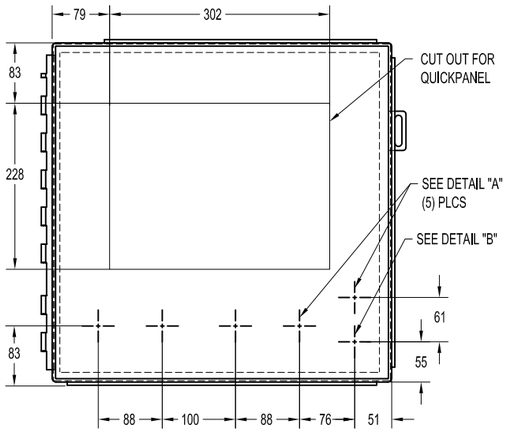

FRONT VIEW - DOOR ONLY

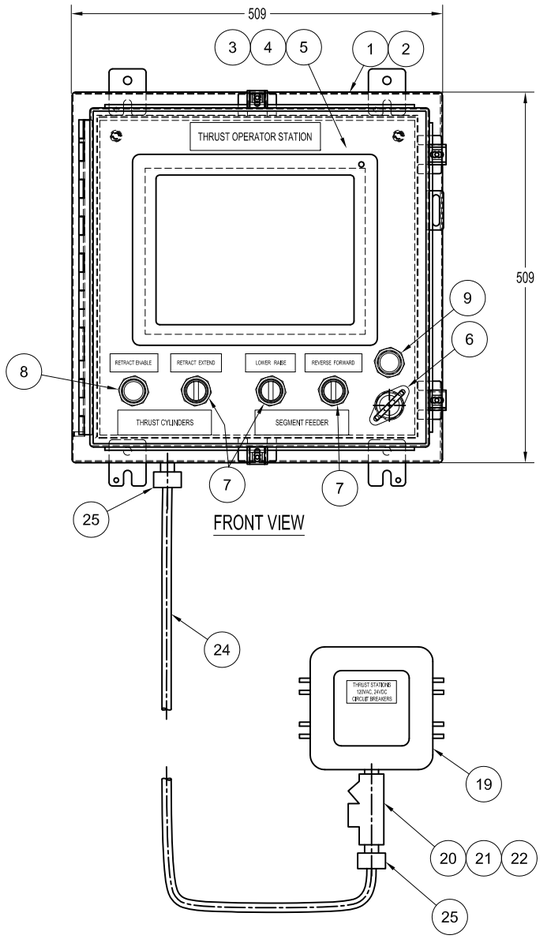

FRONT VIEW

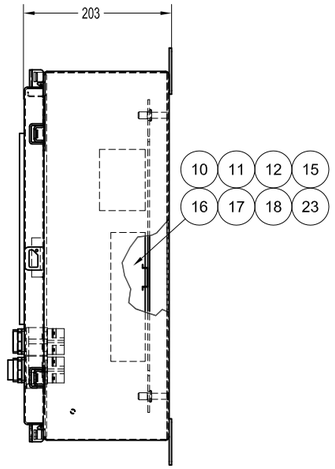

SIDE VIEW

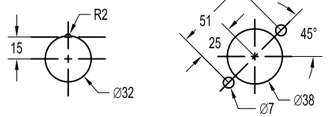

DETAIL "A"

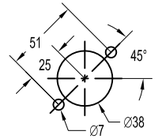

DETAIL "B"

QTY	PART No.	DESCRIPTION	DWG No.	Component/Vendor ID	ITEM
1	D71683-52	BOX, JUNCTION, 20x20x8			1
1	D71683-35	PANEL, 17x17			2
1	A81885-8	QUICKPANEL, 12" VIEW, LOADED			3
1	A81885-12	PROFIBUS SLAVE FOR VIEW			4
1	1030498	PROFIBUS SUB-D CONNECTOR 90°	1030498		5
1	A99651-5	CASTELL INTERLOCK KEY SET, EREC			6
3	A84789-61	3 POS RET TO CENTER 2NO/2NC			7
1	A84789-4	PUSHBUTTON, RED 1NO/1NC			8
1	A84789-12	INDICATING LIGHT, LED GREEN, 24VDC			9
1	A116347-3	CUBE20 BUSNODE MODULE, PROFIBUS			10
1	A116347-7	CUBE20 DIGITAL I/O MODULE, 16IN/16OUT			11
1	A78734-2	POWER SUPPLY, 24VDC, 10A			12
1	A98068-4	CIRCUIT BREAKER, 5A, 1 POLE			13
1	A98068-7	CIRCUIT BREAKER, 15A, 1 POLE			14
1	1029679	DINRAIL	1029720		15
20	1029672	TERMINAL BLOCK, GREY	1029720		16
4	1029675	END SECTION GREY	1029720		17
4	1029677	END STOP, 36mm	1029720		18
1	A73626-2	EXPLOSION PROOF JUNCTION BOX			19
1	A110249-2	XP SEAL OFF FITTING MALE-FEMALE 3/4"			20
1	A110249-11	ADACO SEALING CEMENT 16oz			21
1	A110249-12	ADACO PACKING FIBER 16oz			22
1	1027159	XP BARRIER, 16 PT, RELAY, 24VDC	1027159		23
2M	A99012-18	CABLE, #16 7 COND SOW			24
2	A78250-4	CORD GRIP			25

1 — FIXED ITEM 2 PART NUMBER — PMB 4/13/12 — DH 4/13/12

REV — DESCRIPTION — REV'D BY / DATE — APP'D BY / DATE

NOTES:

1. WIRE PER MACHINE SCHEMATIC.
2. CONFIGURE PLC MODULES PER PLC INSTALLATION DRAWING.
3. ALL TERMINALS AND WIRING ABOVE 55 VOLTS SHALL BE PROTECTED AGAINST ELECTRICAL SHOCK (DIRECT AND INDIRECT CONTACT) BY USE OF INSULATED BARRIERS AND SHIELDS.
4. CERTIFY AND MARK ASSEMBLY AS CE COMPLIANT.

5 — MOUNTED IN XP ENCLOSURE

RETRACT ENABLE | RETRACT EXTEND | LOWER RAISE | REVERSE FORWARD | THRUST STATIONS 120VAC, 24VDC CIRCUIT BREAKERS

THRUST CYLINDERS | SEGMENT FEEDER | THRUST OPERATOR STATION

LABELS BY CABINET BUILDER

PROPRIETARY NOTICE
This information disclosed hereon is the sole property of The Robbins Company and is submitted in confidence. It shall not be duplicated in full or part, used by or disclosed to any person, firm or corporation for any purpose except The Robbins Company. By accepting this information, recipient agrees to indemnify The Robbins Company against any loss, expense or damage from such use. This material is to loan only, subsequent to the conditions. This material is to loan only, and is to be returned upon request. Any reproduction in whole or in part must bear this notice.

MACHINE	NEXT ASSY
EPB2016-367-377	1046350

UNLESS NOTED ALL DIMS ARE mm

TOLERANCES UNLESS NOTED

FRACTIONS: 0-300 ± 1/8; 300-1500 ± 3/16; 1500-6000 ± 1/4; 6000+ ± 1/2

DECIMALS: X ± 1.5; X.X ± 1.0; X.XX ± .40; X.XXX ± .100; ANGLES ± 1; SURFACE FINISH 63

MATERIAL

WELD PREPARATION

DIMENSIONS (X) ARE REFERENCE

ALL GEOMETRIC DIMENSIONING & TOLERANCING PER ANSI Y14.5-2009

WEIGHT TOTAL

TITLE: LOWER THRUST OPERATOR STATION ASSY, CLASS 1 DIV 2

DWG No. 1046601 — REV 1 — SHT 1 OF 1 — SCALE 1:4 — DO NOT SCALE

DRAWN BY: P.BRENNAN — DATE 2/24/2012

CHECKED BY/HEADS: P.BRENNAN

CHECKED DESIGN 2/24/2012

APPROVED BY: D.HOBBS — DATE 2/24/2012

Robbins

www.TheRobbinsCompany.com

1046601

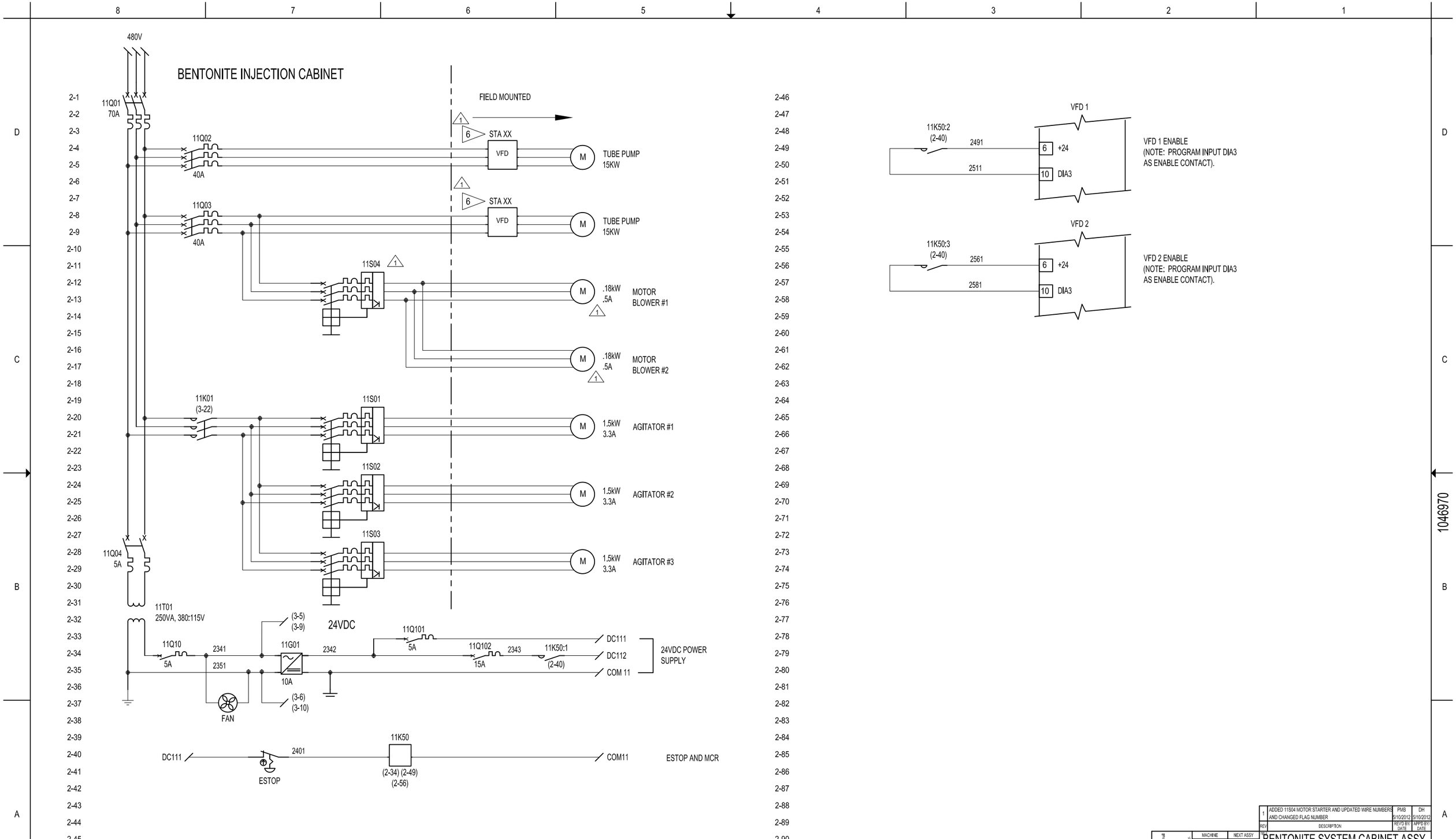

1046970

REV	DESCRIPTION	REV'D BY/ DATE	APP'D BY/ DATE
1	ADDED 11S04 MOTOR STARTER AND UPDATED WIRE NUMBERS AND CHANGED FLAG NUMBER	PMB 5/10/2012	DH 5/10/2012

MACHINE	NEXT ASSY
EPB2016-376/377	1046350

UNLESS NOTED ALL DIMS ARE mm

TOLERANCES UNLESS NOTED

FAB (mm)	0-300 ± 1.5	X	± 1.5
	300-1500 ± 3	X.X	± 1.0
	1500-6000 ± 6	X.XX	± .40
	6000+ ± 12	X.XXX	± .100
		ANGLES	± 1
		SURFACE	0.3
		DIMENSIONS (X) ARE REFERENCE	

THIRD ANGLE PROJECTION

ALL GEOMETRIC DIMENSIONING & TOLERANCING PER ANSI Y14.5-2009

BENTONITE SYSTEM CABINET ASSY CLASS 1 DIV 2

SIZE	DWG No.	REV	SHT	SCALE
D	1046970	1	2 OF 3	1:1 DO NOT SCALE

DRAWN BY	CHECKED STANDARDS
P.BRENNAN	P.BRENNAN
DATE 3/28/2012	CHECKED DESIGN 3/28/2012
WEIGHT TOTAL	APPROVED BY D.HOBBS
	DATE 3/28/2012

Robbins

www.TheRobbinsCompany.com

NOTES:

1. ALL COMPONENTS SHALL BE IDENTIFIED BY LABELS.
2. ALL TERMINALS AND WIRING ABOVE 55 VOLTS SHALL BE PROTECTED AGAINST ELECTRICAL SHOCK (DIRECT AND INDIRECT CONTACT) BY USE OF INSULATED BARRIERS AND SHIELDS.
3. CERTIFY AND MARK ASSEMBLY AS CE COMPLIANT.
4. PHYSICAL LAYOUT SHOWN IS GENERAL ONLY. CABINET BUILDER CAN RE-ARRANGE COMPONENT LAYOUT AS REQUIRED.

5 LABEL ALL MVK PORTS AND CABLES AS SHOWN.

6 ASSIGN PROFIBUS ADDRESS PER MACHINE PLC INSTALLATION DRAWING.

7 LABEL TO BE BLACK LETTERING ON WHITE PHENOLIC.

8 SHIP REMAINING CONNECTORS LOOSE.

9 MOUNT COOLING FAN TO HEAT EXCHANGER AND MOUNT HEAT EXCHANGER TO DOOR WITH 1" GAP. RUN COOLING TUBING SO THE DOOR CAN BE OPEN WITHOUT STRAINING HOSE.

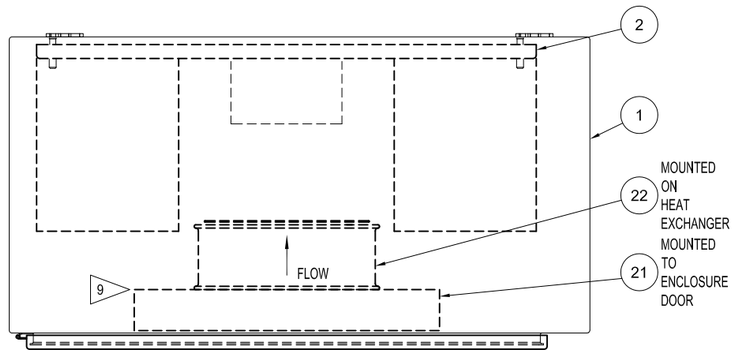

TOP VIEW

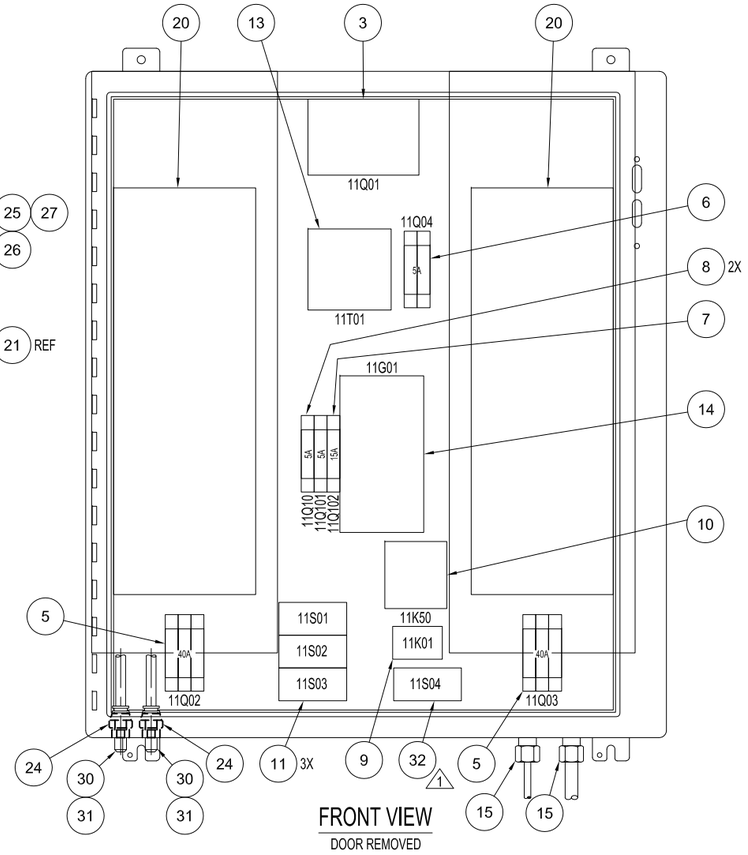

FRONT VIEW
DOOR REMOVED

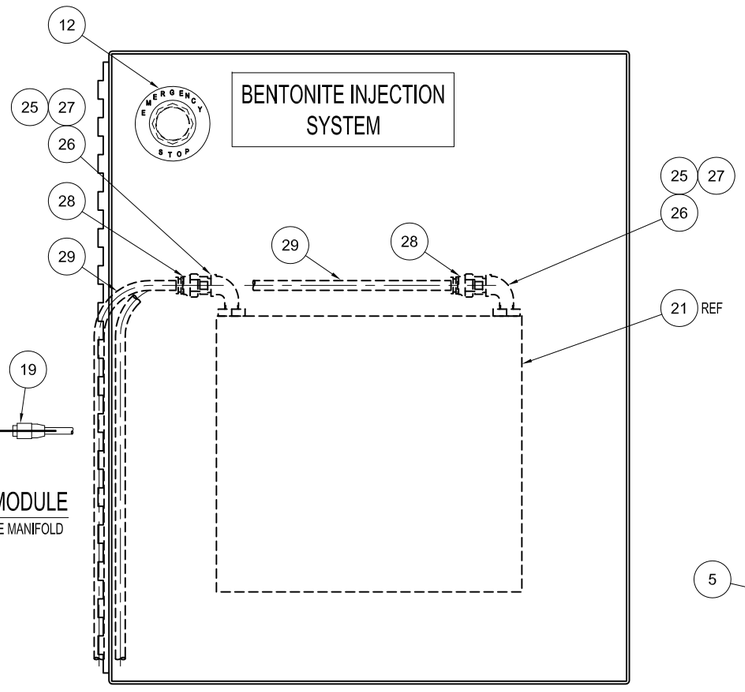

MVK COMBO MODULE
MOUNTED NEAR VALVE MANIFOLD

FRONT VIEW DOOR

QTY	PART No.	DESCRIPTION	DWG No.	Component/Vendor ID	ITEM
1	1047306-7	DISCONNECT ENCLOSURE, 36H x 32W x 16D			1
1	D71683-63	PANEL, 36 X 30			2
1	A92158-10	CIRCUIT BREAKER, 70A, 3 POLE		11Q01	3
1	1047307-2	DISCONNECT MECHANISM HANDLE ASSY		11Q01	4
2	A94534-18	CIRCUIT BREAKER 40A, 3 POLE, MINI		11Q02, 11Q03	5
1	A98069-4	CIRCUIT BREAKER 5A, 2 POLE		11Q04	6
1	A98068-7	CIRCUIT BREAKER 15A, 1 POLE		11Q102	7
2	A98068-4	CIRCUIT BREAKER 5A, 1 POLE		11Q10, 11Q101	8
1	A104506-3	CONTACTOR, 12A, 24VDC COIL		11K01	9
1	A104506-6	CONTACTOR, 4 POLE, 24VDC		11K50	10
3	A103956-4	MANUAL MOTOR STARTER, 2.5-4A		11S01-03	11
1	1028888	PUSHBUTTON, ESTOP, 3NC/1NO			12
1	A79654-4	TRANSFORMER, 250VA, 480:120V		11T01	13
1	A78734-2	POWER SUPPLY, 24VDC, 10A		11G01	14
4	A78250-2	CORD GRIP, 1/2", 0.25-0.38 CORD			15
1	A115960-25	MVK COMBO MODULE, PROFIBUS NODE + 4 X DIG I/O + 4 X ANNA 0-10V IN			16
4	A115960-27	ADAPTER, CURRENT TO VOLTAGE, M12 MALE PLUG			17
1	A115960-15	CUBE67 7/8" POWER PLUG + CABLE, 5M			18
8	A115960-20	CUBE67 DEVICE CONNECTOR, M12 MALE 5P			19
2	1030750	VFD, 15KW, 380-500V, NEMA 12			20
1	1047319	HEAT EXCHANGER			21
1	1047320-1	FAN, 10" COMPACT			22
2	1030498	PROFIBUS SUB-D CONNECTOR			23
1	A115960-23	CUBE67 M12 PLASTIC BLIND PLUG, 10/PKG			24
2	A108565-4	90 DEGREE ELBOW, 1/2"			25
2	A108564-1	REDUCER, 3/4" x 1/2"			26
2	2001370	1/2" MALE PIPE TO 1/2" MALE JIC	2001346		27
4	2000591	1/2" JIC TO 1/2" HOSE END	2000588		28
2M	2000549	1/2" HOSE	2000546		29
2	2001216	1/2" MALE JIC BULKHEAD FITTING	2001208		30
2	663-060	JIC BULKHEAD JAM NUT			31
1	A103956-2	MANUAL MOTOR STARTER, 1 - 1.6A		11S04	32

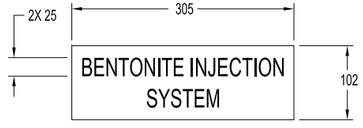

7 LABEL DETAIL
NTS

REV	DESCRIPTION	REV'D BY / DATE	APP'D BY / DATE
1	ADDED MANUAL MOTOR STARTER FOR BLOWER	PMB 5/10/2012	DH 5/10/2012

PROPRIETARY NOTICE
This information disclosed hereon is the sole property of Robbins & Myers Energy Systems L.P. and/or its affiliates and may not be duplicated in full or part, used by or disclosed to any third party without the express written permission of Robbins & Myers Energy Systems L.P. By accepting this information, recipient agrees to use the information solely for the purpose authorized by Robbins & Myers Energy Systems L.P. and/or its affiliates and to return this information on request and all copies made thereof.

MACHINE	NEXT ASSY
EPB2016-376/377	1046350

UNLESS NOTED ALL DIMS ARE mm
TOLERANCES UNLESS NOTED
FRACTIONS ± 1/8
DECIMALS X ± 1.5, .X ± 1.5, .XX ± 1.0, .XXX ± .40, X.XXX ± .100
ANGLES ± 1°
SURFACE FINISH 125
DIMENSIONS (XX) ARE REFERENCE.
ALL GEOMETRIC DIMENSIONING & TOLERANCING PER ANSI Y14.5-2009

BENTONITE SYSTEM CABINET ASSY
CLASS 1 DIV 2

SIZE	DWG No.	REV	SHT	SCALE
D	1046970	1	1 of 3	1:4

DO NOT SCALE

DRAWN BY	CHECKED STRUCTURE
P.BRENNAN	P.BRENNAN
DATE 3/28/2012	CHECKED DESIGN 3/28/2012
WEIGHT TOTAL	APPROVED BY D.HOBBS
	DATE 3/28/2012

Robbins

www.TheRobbinsCompany.com

1046970

SHT	REV
3	1
2	1
1	1

QTY	PART No.	DESCRIPTION	DWG No.	Component/Vendor ID	ITEM
-	1046916-1	TBM GUIDANCE AND MONITORING SYSTEM - CLASS 1 DIV 2		ROBOTEC + ARIGATAYA C1D2	1
-	1046916-2	TAIL CLEARANCE MEASURE OPTION - CLASS 1 DIV 2		TAIL-CLEARANCE C1D2	2

NOTES:

SEE DRAWING A115800 FOR SPARE PARTS, SOFTWARE OPTIONS

DESCRIPTION

ENZAN TBM GUIDANCE AND MONITORING (LOGGING) SYSTEM FOR CLASS 1 DIV 2 ENVIRONMENT

* SYSTEM IS COMPLETE WITH TARGETS, INCLINOMETER, CONTROL UNITS, INTERCONNECTING CABLES, TBM COMPUTER AND DISPLAY, SURFACE COMPUTER AND DISPLAY

* COMMS LINK MEDIUM (CABLE OR FIBER) BETWEEN TBM AND SURFACE IS NOT INCLUDED

* SYSTEM TO BE SUITABLE FOR INSTALLATION IN A POTENTIALLY GASSY (METHANE) ENVIRONMENT PER ANY OF THE FOLLOWING RULES (MANUFACTURER'S CHOICE):

  1. (USA): NATIONAL ELECTRIC CODE CLASS 1 DIV 2 GRP C,D
  2. (EURO): ATEX ZONE 2
  3. (JAPAN): JIS C60079 ZONE 2

PURCHASING NOTES:

EACH SYSTEM IS CUSTOM FOR THE PROJECT. WHEN ORDERING SYSTEM OR SPARES, SPECIFY THE MACHINE ID AND SITE NAME ON P.O.

MANUFACTURER

ENZAN KOUBOU CO. LTD.
KYOTO, JAPAN
WWW.ENZAN-K.COM

1046916

REV	DESCRIPTION	REV'D BY/ DATE	APP'D BY/ DATE
1	CHANGED DRAWING FILE NAME	PMB 3/27/12	DH 3/27/12

PROPRIETARY NOTICE
The information disclosed hereon, is the sole property of The Robbins Company, and remains their sole property. It shall not be duplicated in whole or part, used by, or disclosed to any other party without the prior written consent of The Robbins Company. By accepting this information, recipient agrees to abide in total with this notice, without any modification whatsoever to the conditions. This material is on loan only, and is to be returned upon request to The Robbins Company.

MACHINE	NEXT ASSY

UNLESS NOTED ALL DIMS ARE inch
TOLERANCES UNLESS NOTED

FAB (inch)		MACHINING (inch)	
0 - 1'	± 1/16	FRACTIONS	± 1/16
1' - 5'	± 1/8	.X	± .03
5' - 20'	± 1/4	.XX	± .015
20' +	± 1/2	.XXX	± .005
		ANGLES	± 1
		SURFACE FINISH	250

THIRD ANGLE PROJECTION

DIMENSIONS (X) ARE REFERENCE
ALL GEOMETRIC DIMENSIONING & TOLERANCING PER ANSI Y14.5-2009

TITLE: GUIDANCE AND LOGGER SYSTEM, CLASS 1 DIV 2 - ENZAN

SIZE	DWG No.	REV	SHT	SCALE
A	1046916	1	1 OF 1	1'0"=1'0"

DO NOT SCALE

DRAWN BY	CHECKED STANDARDS
P.BRENNAN	P.BRENNAN
DATE 3/23/2012	CHECKED DESIGN 3/23/2012
WEIGHT TOTAL	APPROVED BY D.HOBBS
	DATE 3/23/2012

Robbins

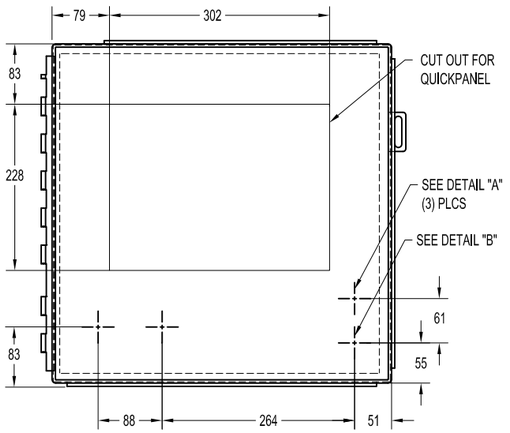

FRONT VIEW - DOOR ONLY

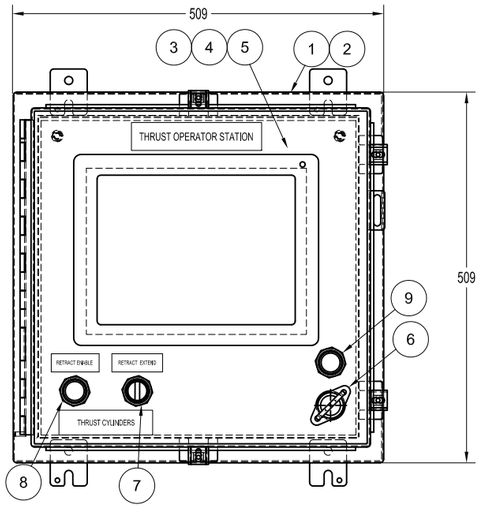

FRONT VIEW

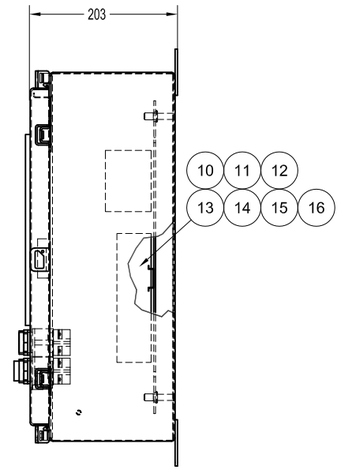

SIDE VIEW

QTY	PART No.	DESCRIPTION	DWG No.	Component/Vendor ID	ITEM
1	D71683-52	BOX, JUNCTION, 20x20x8			1
1	D71683-35	PANEL, 17x17			2
1	A81885-8	QUICKPANEL, 12" VIEW, LOADED			3
1	A81885-12	PROFIBUS SLAVE FOR VIEW			4
1	1030498	PROFIBUS SUB-D CONNECTOR 90°	1030498		5
1	A99651-5	CASTELL INTERLOCK KEY SET, EREC			6
1	A84789-61	3 POS RET TO CENTER 2NO/2NC			7
1	A84789-4	PUSHBUTTON, RED 1NO/1NC			8
1	A84789-12	INDICATING LIGHT, LED GREEN, 24VDC			9
1	A116347-3	CUBE20 BUSNODE MODULE, PROFIBUS			10
1	A116347-7	CUBE20 DIGITAL I/O MODULE, 16IN/16OUT			11
1	1029679	DINRAIL	1029720		12
20	1029672	TERMINAL BLOCK, GREY	1029720		13
4	1029675	END SECTION GREY	1029720		14
4	1029677	END STOP, 36mm	1029720		15
1	1047271	XP BARRIER, 8PT, RELAY, 24VDC			16

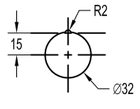

DETAIL "A"

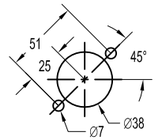

DETAIL "B"

NOTES:

1. WIRE PER MACHINE SCHEMATIC.
2. CONFIGURE PLC MODULES PER PLC INSTALLATION DRAWING.
3. ALL TERMINALS AND WIRING ABOVE 55 VOLTS SHALL BE PROTECTED AGAINST ELECTRICAL SHOCK (DIRECT AND INDIRECT CONTACT) BY USE OF INSULATED BARRIERS AND SHIELDS.
4. CERTIFY AND MARK ASSEMBLY AS CE COMPLIANT.

RETRACT ENABLE

RETRACT EXTEND

THRUST CYLINDERS

THRUST OPERATOR STATION

LABELS BY CABINET BUILDER

PROPRIETARY NOTICE
The information disclosed hereon is the sole property of The Robbins Company and is furnished in confidence. It shall not be duplicated in full or part, used by or disclosed to any other party without the written consent of The Robbins Company. By accepting the information, recipient agrees to use such information solely for the purpose authorized by The Robbins Company. This material is on loan and, upon request, must be returned to The Robbins Company.

MACHINE	NEXT ASSY
EPB2016-367/377	1046350

UNLESS NOTED ALL DIMS ARE mm
TOLERANCES UNLESS NOTED

0-300	± 1.5	X	± 1.5
300-1500	± 3	X.X	± 1.0
1500-6000	± 5	X.XX	± .40
6000+	± 12	X.XXX	± .100

MACHINE FINISH
ANSI B5 SURFACE 63 RMS
INTERPRET DIMENSIONS IN ACCORDANCE WITH ANSI Y14.5-2009
DIMENSIONS (XX) ARE REFERENCE
ALL GEOMETRIC DIMENSIONING & TOLERANCING PER ANSI Y14.5-2009

REV	DESCRIPTION	REV'D BY/ DATE	APP'D BY/ DATE
1	FIXED ITEN 2 PART NUMBER	PMB 4/13/12	DH 4/13/12

TITLE: UPPER THRUST OPERATOR STATION ASSY, CLASS 1 DIV 2

SIZE	DWG No.	REV	SHT	SCALE
D	1046643	1	1 OF 1	1:4

DO NOT SCALE

DRAWN BY: P.BRENNAN DATE: 2/24/2012
CHECKED BY/ENGR: P.BRENNAN CHECKED 2/24/2012
WEIGHT TOTAL:
APPROVED BY: D.HOBBS DATE: 2/24/2012

Robbins
www.TheRobbinsCompany.com

1046643

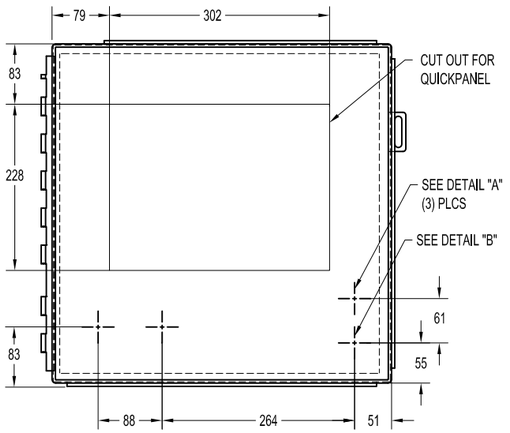

FRONT VIEW - DOOR ONLY

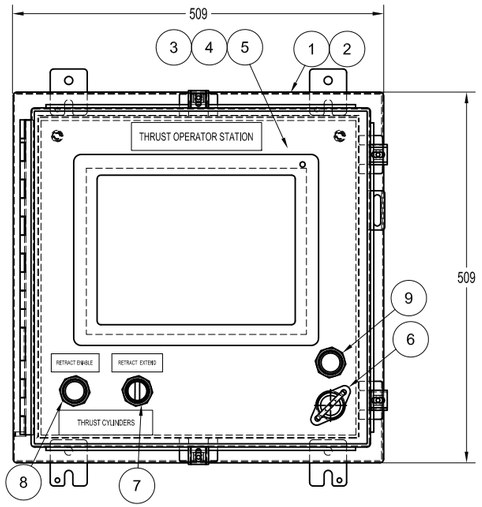

FRONT VIEW

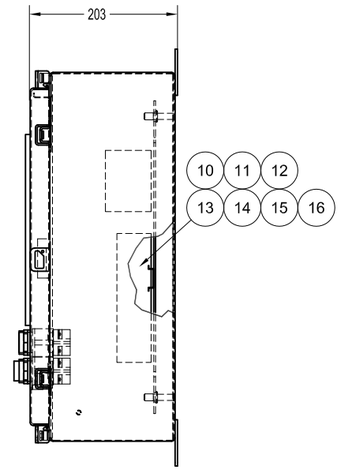

SIDE VIEW

QTY	PART No.	DESCRIPTION	DWG No.	Component/Vendor ID	ITEM
1	D71683-52	BOX, JUNCTION, 20x20x8			1
1	D71683-35	PANEL, 17x17			2
1	A81885-8	QUICKPANEL, 12" VIEW, LOADED			3
1	A81885-12	PROFIBUS SLAVE FOR VIEW			4
1	1030498	PROFIBUS SUB-D CONNECTOR 90°	1030498		5
1	A99651-5	CASTELL INTERLOCK KEY SET, EREC			6
1	A84789-61	3 POS RET TO CENTER 2NO/2NC			7
1	A84789-4	PUSHBUTTON, RED 1NO/1NC			8
1	A84789-12	INDICATING LIGHT, LED GREEN, 24VDC			9
1	A116347-3	CUBE20 BUSNODE MODULE, PROFIBUS			10
1	A116347-7	CUBE20 DIGITAL I/O MODULE, 16IN/16OUT			11
1	1029679	DINRAIL	1029720		12
20	1029672	TERMINAL BLOCK, GREY	1029720		13
4	1029675	END SECTION GREY	1029720		14
4	1029677	END STOP, 36mm	1029720		15
1	1047271	XP BARRIER, 8PT, RELAY, 24VDC			16

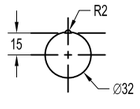

DETAIL "A"

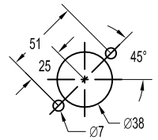

DETAIL "B"

NOTES:

1. WIRE PER MACHINE SCHEMATIC.
2. CONFIGURE PLC MODULES PER PLC INSTALLATION DRAWING.
3. ALL TERMINALS AND WIRING ABOVE 55 VOLTS SHALL BE PROTECTED AGAINST ELECTRICAL SHOCK (DIRECT AND INDIRECT CONTACT) BY USE OF INSULATED BARRIERS AND SHIELDS.
4. CERTIFY AND MARK ASSEMBLY AS CE COMPLIANT.

RETRACT ENABLE

RETRACT EXTEND

THRUST CYLINDERS

THRUST OPERATOR STATION

LABELS BY CABINET BUILDER

PROPRIETARY NOTICE
The information disclosed hereon is the sole property of The Robbins Company and is furnished in confidence. It shall not be duplicated in full or part, used by or disclosed to any other party without the written consent of The Robbins Company. By accepting the information, recipient agrees to use such information solely for the purpose authorized by The Robbins Company. This material is on loan and, upon request, must be returned to The Robbins Company.

MACHINE	NEXT ASSY
EPB2016-367/377	1046350

UNLESS NOTED ALL DIMS ARE mm
TOLERANCES UNLESS NOTED

0-300	± 1.5	X	± 1.5
300-1500	± 3	X.X	± 1.0
1500-6000	± 5	X.XX	± .40
6000+	± 12	X.XXX	± .100

MACHINE FINISH
ANSI B5 SURFACE 63 RMS
INTERPRET DIMENSIONS IN ACCORDANCE WITH ANSI Y14.5-2009
DIMENSIONS (XX) ARE REFERENCE
ALL GEOMETRIC DIMENSIONING & TOLERANCING PER ANSI Y14.5-2009

REV	DESCRIPTION	REV'D BY/ DATE	APP'D BY/ DATE
1	FIXED ITEN 2 PART NUMBER	PMB 4/13/12	DH 4/13/12

TITLE: UPPER THRUST OPERATOR STATION ASSY, CLASS 1 DIV 2

SIZE	DWG No.	REV	SHT	SCALE
D	1046643	1	1 OF 1	1:4

DO NOT SCALE

DRAWN BY: P.BRENNAN DATE: 2/24/2012
CHECKED BY/ENGR: P.BRENNAN CHECKED 2/24/2012
WEIGHT TOTAL:
APPROVED BY: D.HOBBS DATE: 2/24/2012

Robbins
www.TheRobbinsCompany.com

1046643

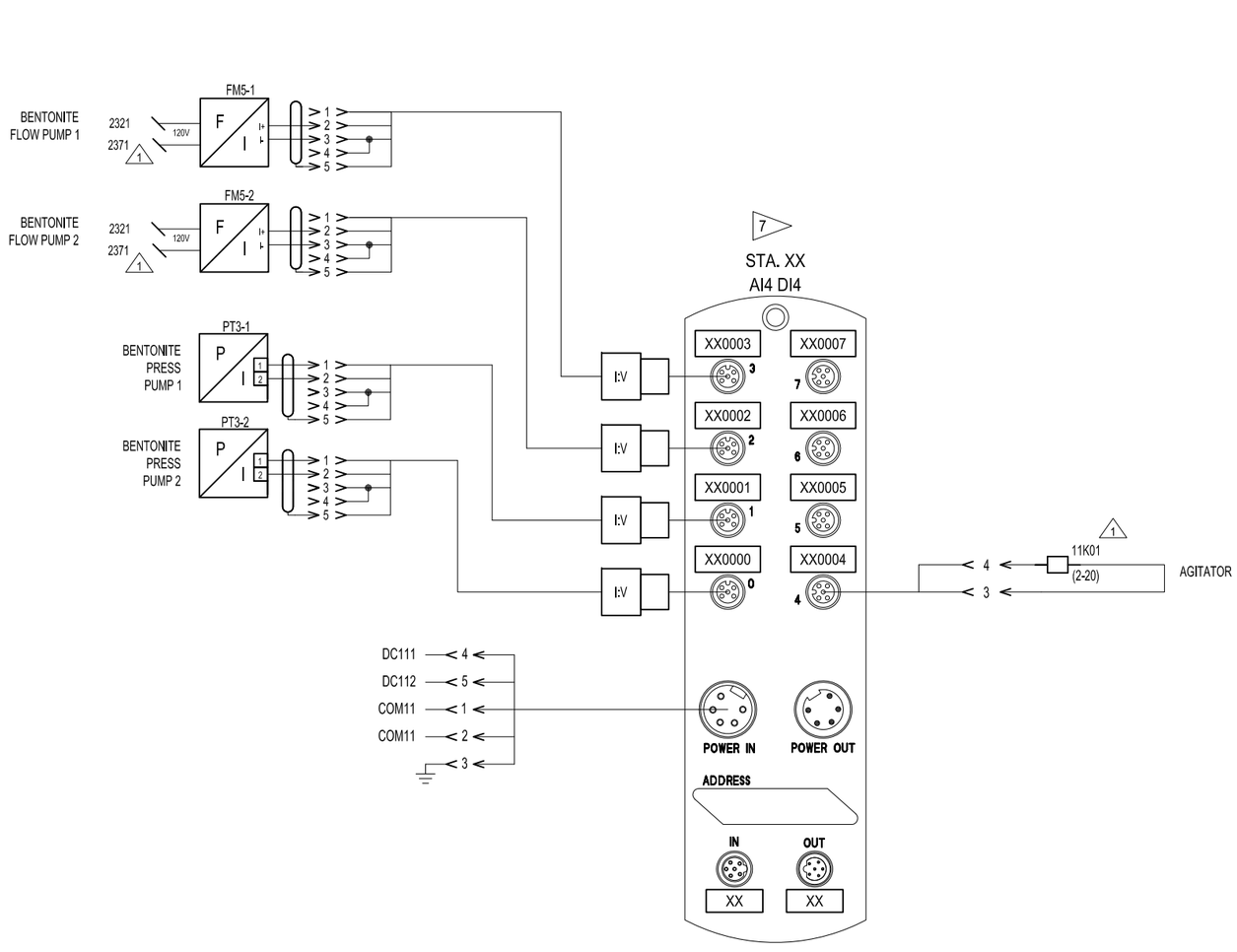

REV	DESCRIPTION	REV'D BY / DATE	APP'D BY / DATE
1	UPDATED COIL LOCATION	PMB 5/10/2012	DH 5/10/2012

MACHINE	NEXT ASSY
EPB2016-376/377	1046350

UNLESS NOTED ALL DIMS ARE mm

TOLERANCES UNLESS NOTED

FAB (mm)	0-300 ± 1.5	MACHINING (mm)	X ± 1.5
	300-1500 ± 3		X.X ± 1.0
	1500-6000 ± 6		X.XX ± .40
	6000+ ± 12		X.XXX ± .100
			ANGLES ± 1
			SURFACE 63
			DIMENSIONS ARE REFERENCE

THIRD ANGLE PROJECTION

ALL GEOMETRIC DIMENSIONING & TOLERANCING PER ANSI Y14.5-2009

BENTONITE SYSTEM CABINET ASSY CLASS 1 DIV 2

SIZE	DWG No.	REV	SHT	SCALE
D	1046970	1	3 OF 3	1:1 DO NOT SCALE

DRAWN BY	CHECKED STANDARDS
P.BRENNAN	P.BRENNAN
DATE 3/28/2012	CHECKED DESIGN 3/28/2012
WEIGHT TOTAL	APPROVED BY D.HOBBS
	DATE 3/28/2012

Robbins

www.TheRobbinsCompany.com

PROPRIETARY NOTICE
The information disclosed herein is the sole property of The Robbins Company and remains the sole property. It shall not be disclosed in all or part, used by or disclosed to any other party without prior written consent of The Robbins Company. By accepting this information, recipient agrees to make its use within the scope, without any modification or whatsoever to the conditions. This material is not to be sold, reproduced or used in any form without prior written consent of The Robbins Company.

1046970

QTY	PART No.	DESCRIPTION	DWG No.	Component/Vendor ID	ITEM
1	1047618	ENCLOSURE XP, 36"L X 24"W X 10"D			1
2	A98068-4	CIRCUIT BREAKER, 1 POLE, 5A		Q1, Q2, Q3	2
1	A98068-7	CIRCUIT BREAKER, 1POLE, 15A		Q4	3
6	A99193-8	FUSE, 2A, CLASS J		F1 - F6	4
3	A108369-2	FUSE HOLDER, 2 POLE, CLASS J		F1 - F6	5
2	A123085-1	CONTACTOR, 400A, 120VAC 50/60HZ		TR1, TR2	6
3	A83877-6	TRANSFORMER, 250VA, 480:120V		T1, T2, T3	7
1	A78734-2	POWER SUPPLY, 10A, 24VDC		G1	8

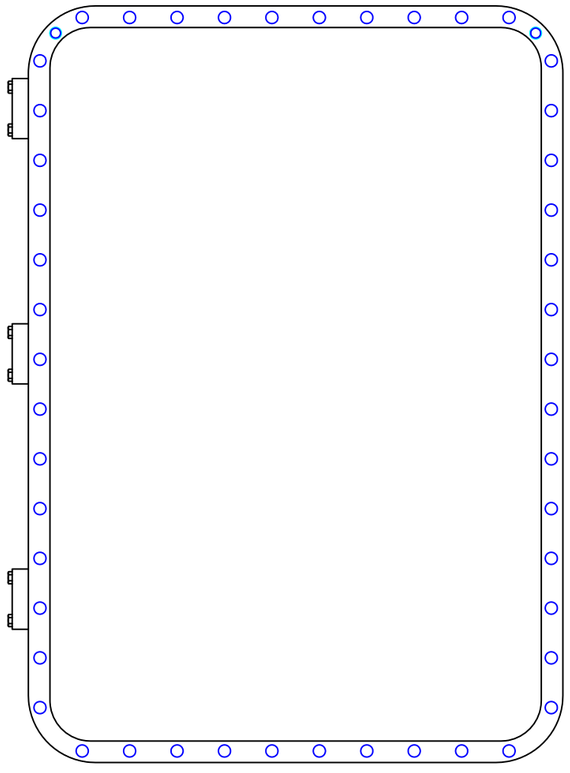

EXTERIOR VIEW

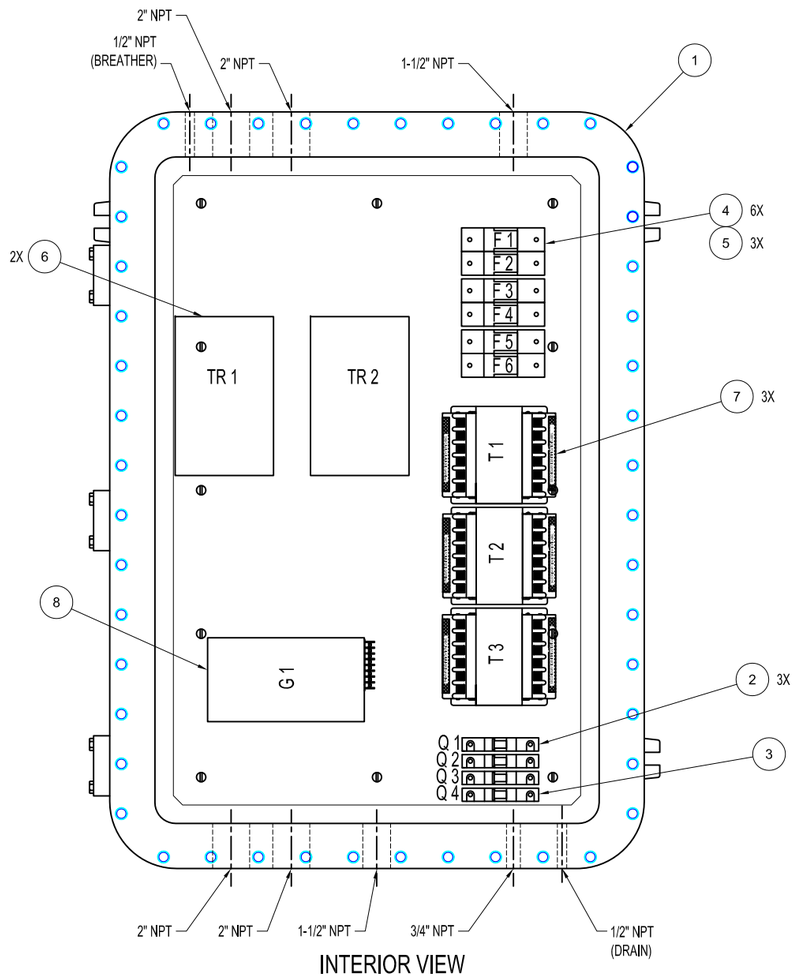

INTERIOR VIEW

1047590

REV	DESCRIPTION	REV'D BY/ DATE	APP'D BY/ DATE

TITLE: TRANSFER RELAY ASSY 400A, 480VAC, XP

MACHINE	NEXT ASSY
EPB2016-376/377	1046350

UNLESS NOTED ALL DIMS ARE mm

TOLERANCES UNLESS NOTED

FAB (mm)		MACH (mm)	
0-300	± 1.5	X	± 1.5
300-1500	± 3	X.X	± 1.0
1500-6000	± 6	X.XX	± .40
6000+	± 12	X.XXX	± .100
		ANGLES	± 1
		SURFACE	63
		RMS	

THIRD ANGLE PROJECTION

DIMENSIONS (X) ARE REFERENCE

ALL GEOMETRIC DIMENSIONING & TOLERANCING PER ANSI Y14.5-2009

SIZE: D | DWG No.: 1047590 | REV: 0 | SHT 1 OF 2 | SCALE: 1:4 DO NOT SCALE

DRAWN BY: P.BRENNAN | DATE: 4/23/2012 | CHECKED STANDARDS: P.BRENNAN | CHECKED DESIGN: D.HOBBS

WEIGHT TOTAL: | APPROVED BY: D.HOBBS | DATE: 4/23/2012

Robbins

PROPRIETARY NOTICE
This information disclosed herein is the sole property of The Robbins Company and remains the property of it shall not be duplicated in full or part, used by or disclosed to any other party without prior written consent of The Robbins Company. By accepting this information, recipient agrees to the foregoing and to the other terms and conditions of the Robbins Company, which are made a part of the Robbins Company, which are made a part of the Robbins Company. The material is not to be used, reproduced or disclosed to any other party without prior written consent of The Robbins Company.

www.TheRobbinsCompany.com

NOTES:

1. ALL COMPONENTS SHALL BE IDENTIFIED BY LABELS.
2. ALL TERMINALS AND WIRING ABOVE 55 VOLTS SHALL BE PROTECTED AGAINST ELECTRICAL SHOCK (DIRECT AND INDIRECT CONTACT) BY USE OF INSULATED BARRIERS AND SHIELDS.
3. CERTIFY AND MARK ASSEMBLY AS CE COMPLIANT.
4. PHYSICAL LAYOUT SHOWN IS GENERAL ONLY. CABINET BUILDER CAN RE-ARRANGE COMPONENT LAYOUT AS REQUIRED.

5 LABEL ALL MVK PORTS AND CABLES AS SHOWN.

6 ASSIGN PROFIBUS ADDRESS PER MACHINE PLC INSTALLATION DRAWING.

7 LABEL TO BE BLACK LETTERING ON WHITE PHENOLIC.

8 SHIP REMAINING CONNECTORS LOOSE.

9 MOUNT COOLING FAN TO HEAT EXCHANGER AND MOUNT HEAT EXCHANGER TO DOOR WITH 1" GAP. RUN COOLING TUBING SO THE DOOR CAN BE OPEN WITHOUT STRAINING HOSE.

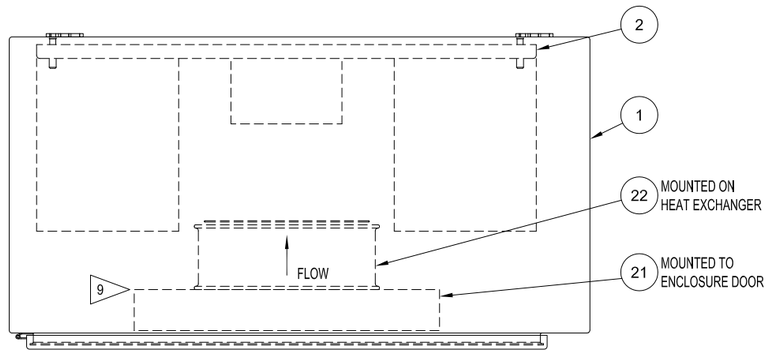

TOP VIEW

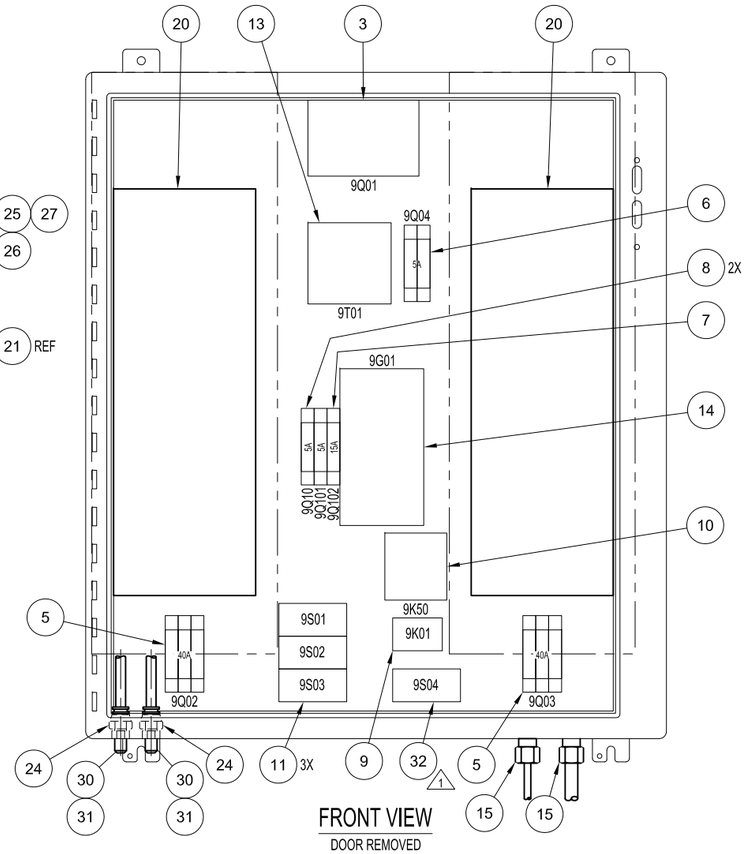

FRONT VIEW
DOOR REMOVED

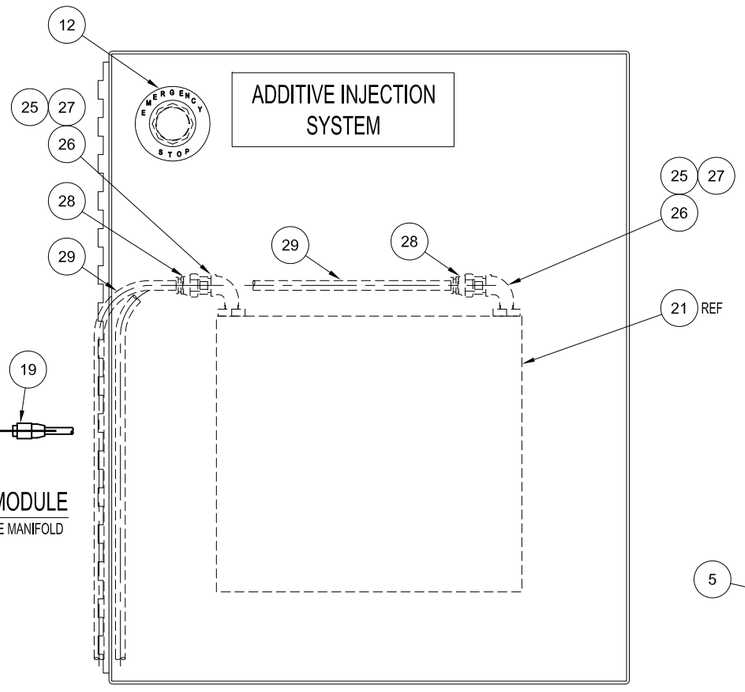

MVK COMBO MODULE
MOUNTED NEAR VALVE MANIFOLD

FRONT VIEW DOOR

QTY	PART No.	DESCRIPTION	DWG No.	Component/Vendor ID	ITEM
1	1047306-7	DISCONNECT ENCLOSURE, 36H x 32W x 16D			1
1	D71683-63	PANEL, 36 X 30			2
1	A92158-10	CIRCUIT BREAKER, 70A, 3 POLE		9Q01	3
1	1047307-2	DISCONNECT MECHANISM HANDLE ASSY		9Q01	4
2	A94534-18	CIRCUIT BREAKER 40A, 3 POLE, MINI		9Q02, 9Q03	5
1	A98069-4	CIRCUIT BREAKER 5A, 2 POLE		9Q04	6
1	A98068-7	CIRCUIT BREAKER 15A, 1 POLE		9Q102	7
2	A98068-4	CIRCUIT BREAKER 5A, 1 POLE		9Q10, 9Q101	8
1	A104506-3	CONTACTOR, 12A, 24VDC COIL		9K01	9
1	A104506-6	CONTACTOR, 4 POLE, 24VDC		9K50	10
3	A103956-4	MANUAL MOTOR STARTER, 2.5-4A		9S01-03	11
1	1028888	PUSHBUTTON, ESTOP, 3NC/1NO			12
1	A79654-4	TRANSFORMER, 250VA, 480:120V		9T01	13
1	A78734-2	POWER SUPPLY, 24VDC, 10A		9G01	14
4	A78250-2	CORD GRIP, 1/2", 0.25-0.38 CORD			15
1	A115960-25	MVK COMBO MODULE, PROFIBUS NODE + 4 X DIG I/O + 4 X ANNA 0-10V IN			16
4	A115960-27	ADAPTER, CURRENT TO VOLTAGE, M12 MALE PLUG			17
1	A115960-15	CUBE67 7/8" POWER PLUG + CABLE, 5M			18
8	A115960-20	CUBE67 DEVICE CONNECTOR, M12 MALE 5P			19
2	1030750	VFD, 15KW, 380-500V, NEMA 12			20
1	1047319	HEAT EXCHANGER			21
1	1047320-1	FAN, 10" COMPACT			22
2	1030498	PROFIBUS SUB-D CONNECTOR			23
1	A115960-23	CUBE67 M12 PLASTIC BLIND PLUG, 10/PKG			24
2	A108565-4	90 DEGREE ELBOW, 1/2"			25
2	A108564-1	REDUCER, 3/4" x 1/2"			26
2	2001370	1/2" MALE PIPE TO 1/2" MALE JIC	2001346		27
4	2000591	1/2" JIC TO 1/2" HOSE END	2000588		28
2M	2000549	1/2" HOSE	2000546		29
2	2001216	1/2" MALE JIC BULKHEAD FITTING	2001208		30
2	663-060	JIC BULKHEAD JAM NUT			31
1	A103956-2	MANUAL MOTOR STARTER, 1 - 1.6A		9S04	32

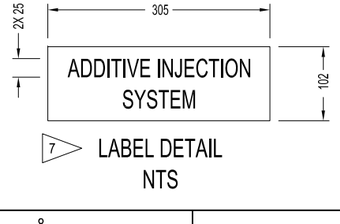

7 LABEL DETAIL
NTS

3	1
2	1
1	1
SHT	REV

REV	DESCRIPTION	REV'D BY / DATE	APP'D BY / DATE
1	ADDED MANUAL MOTOR STARTER 9S04	PMB 5/10/2012	DH 5/10/2012

PROPRIETARY NOTICE
The information disclosed hereon is the sole property of Robbins & Myers, Inc. and is submitted in confidence. It shall not be duplicated in full or part, used by or disclosed to any third party without the written consent of Robbins & Myers, Inc. Company. By accepting this information, recipient agrees to the above restrictions and agrees to return it upon request or whenever it is no longer necessary for the purpose for which it was furnished.

MACHINE	NEXT ASSY
EPB2016-376/377	1046350

UNLESS NOTED ALL DIMS ARE inch
TOLERANCES UNLESS NOTED
FRACTIONS ±1/16
.X ±.03
.XX ±.015
.XXX ±.005
ANGLES ±1°
SURFACE 250 RMS
MATERIAL
FINISH
DIMENSIONS (X) ARE REFERENCE.
ALL GEOMETRIC DIMENSIONING & TOLERANCING PER ANSI Y14.5-2009

TITLE: ADDITIVE CABINET ASSY CLASS 1 DIV 2

SIZE D | DWG No. 1046973 | REV 1 | SHT 1 OF 3 | SCALE 3"=1'0" | DO NOT SCALE

DRAWN BY P.BRENNAN DATE 3/28/2012
CHECKED ENGR P.BRENNAN 3/28/2012
CHECKED DESIGN 3/28/2012
WEIGHT TOTAL
APPROVED BY D.HOBBS DATE 3/28/2012

Robbins

www.TheRobbinsCompany.com

1046973

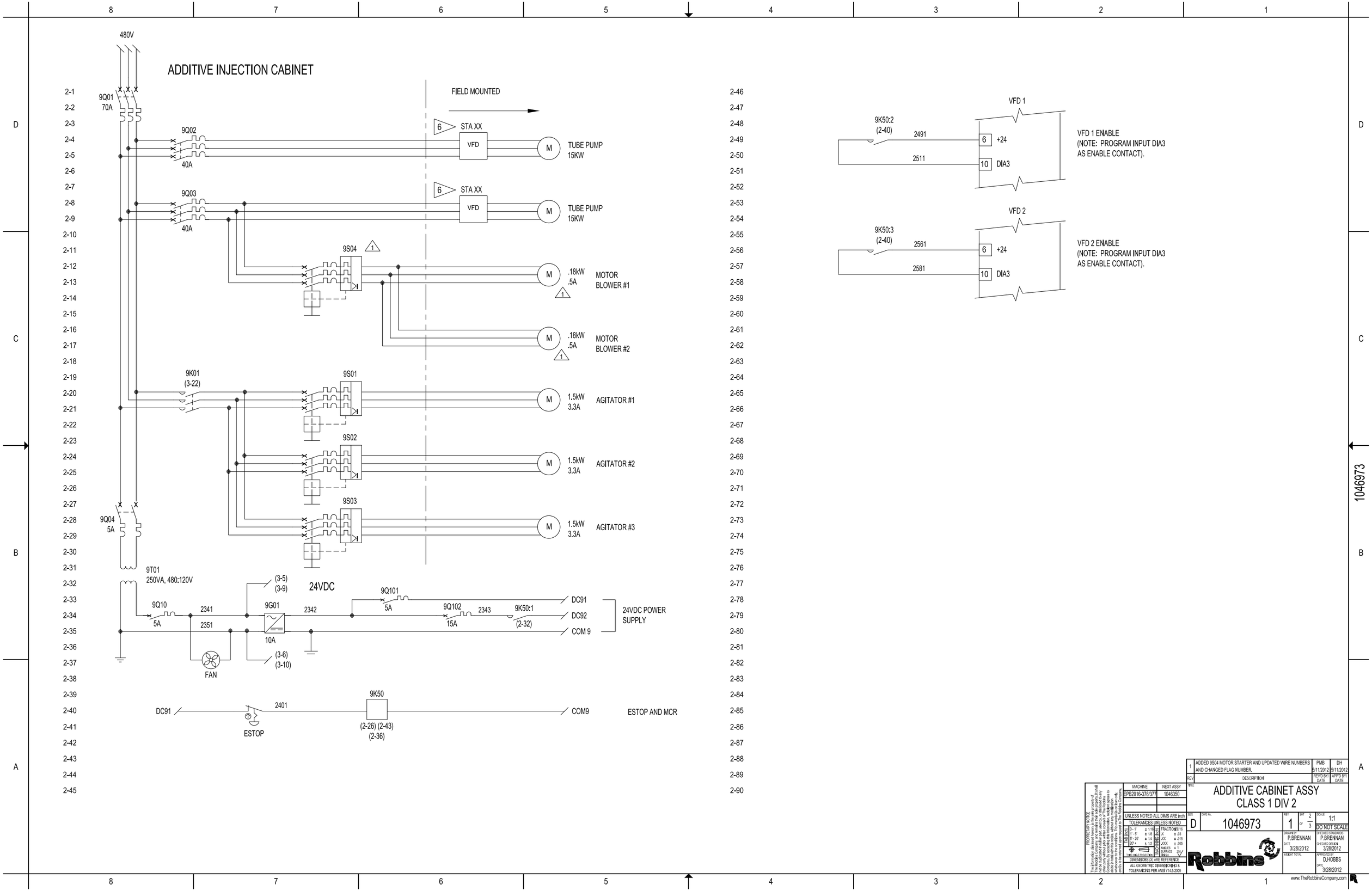

REV	DESCRIPTION	REV'D BY/ DATE	APP'D BY/ DATE
1	ADDED 9S04 MOTOR STARTER AND UPDATED WIRE NUMBERS AND CHANGED FLAG NUMBER.	PMB 5/11/2012	DH 5/11/2012

MACHINE	NEXT ASSY
EPB2016-376/377	1046350

UNLESS NOTED ALL DIMS ARE inch
TOLERANCES UNLESS NOTED
FRACTIONS ± 1/16
X ± .03
XX ± .015
XXX ± .005
ANGLES ± 1
SURFACE 250
DIMENSIONS (X) ARE REFERENCE
ALL GEOMETRIC DIMENSIONING & TOLERANCING PER ANSI Y14.5-2009

TITLE: ADDITIVE CABINET ASSY CLASS 1 DIV 2

SIZE: D | DWG No.: 1046973 | REV: 1 | SHT 2 OF 3 | SCALE: 1:1 DO NOT SCALE

DRAWN BY: P.BRENNAN DATE: 3/28/2012
CHECKED STANDARDS: P.BRENNAN CHECKED DESIGN: 3/28/2012
WEIGHT TOTAL:
APPROVED BY: D.HOBBS DATE: 3/28/2012

Robbins

www.TheRobbinsCompany.com

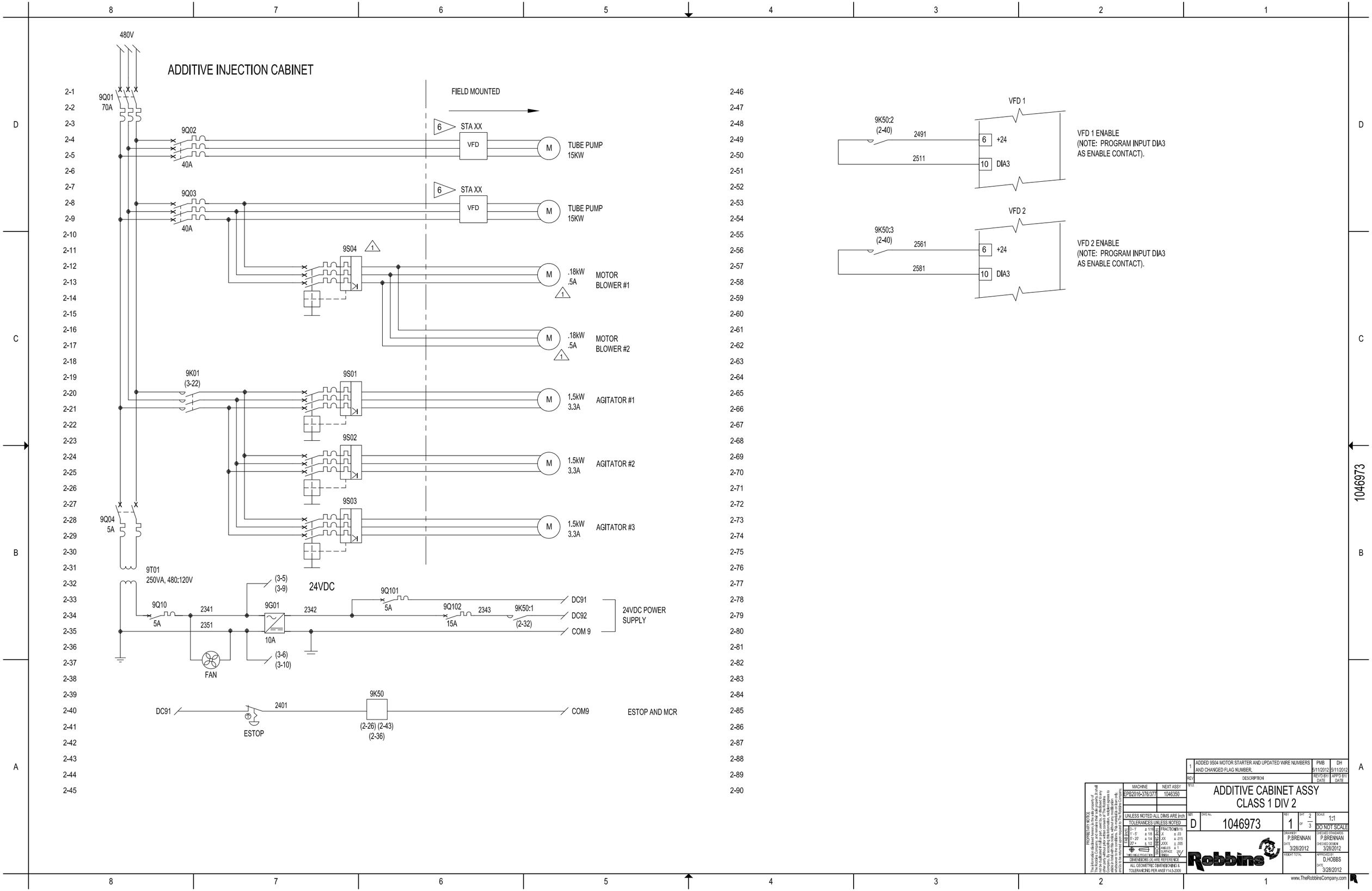

REV	DESCRIPTION	REV'D BY/ DATE	APP'D BY/ DATE
1	ADDED 9S04 MOTOR STARTER AND UPDATED WIRE NUMBERS AND CHANGED FLAG NUMBER.	PMB 5/11/2012	DH 5/11/2012

MACHINE	NEXT ASSY
EPB2016-376/377	1046350

UNLESS NOTED ALL DIMS ARE inch
TOLERANCES UNLESS NOTED
FRACTIONS ± 1/16
X ± .03
XX ± .015
XXX ± .005
ANGLES ± 1
SURFACE 250
DIMENSIONS (X) ARE REFERENCE
ALL GEOMETRIC DIMENSIONING & TOLERANCING PER ANSI Y14.5-2009

TITLE: ADDITIVE CABINET ASSY CLASS 1 DIV 2

SIZE: D | DWG No.: 1046973 | REV: 1 | SHT 2 OF 3 | SCALE: 1:1 DO NOT SCALE

DRAWN BY: P.BRENNAN DATE: 3/28/2012
CHECKED STANDARDS: P.BRENNAN CHECKED DESIGN: 3/28/2012
WEIGHT TOTAL:
APPROVED BY: D.HOBBS DATE: 3/28/2012

Robbins

www.TheRobbinsCompany.com

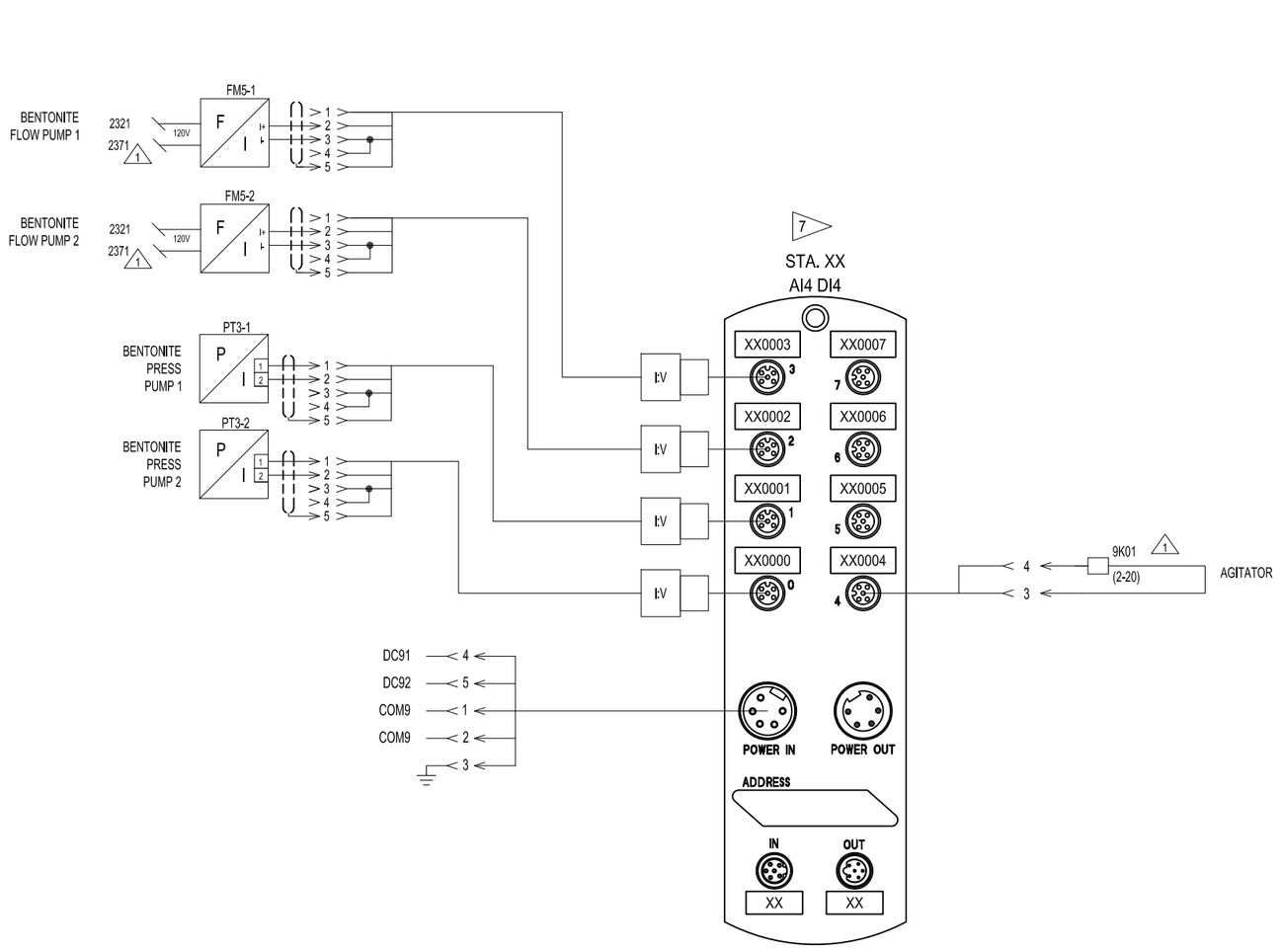

REV	DESCRIPTION	REV'D BY / DATE	APP'D BY / DATE
1	UPDATED COIL LOCATION AND WIRE NUMBERS	PMB 5/11/2012	DH 5/11/2012

PROPRIETARY NOTICE
The information disclosed hereon is the sole property of The Robbins Company and is considered confidential. It shall not be duplicated in full or part, used by, or disclosed to any person, firm or corporation for any purpose whatsoever without the written permission of The Robbins Company. By accepting this information, recipient agrees to hold it in confidence and to use it only for purposes authorized in the conditions. This restriction is not to limit the recipient's right to use information contained in this data if it is rightfully received from a third party without restriction.

MACHINE	NEXT ASSY
EPB2016-376/377	1046350

UNLESS NOTED ALL DIMS ARE Inch
TOLERANCES UNLESS NOTED
0 - 1" ± 1/64
1" - 5" ± 1/32
5" - 20" ± 1/16
20" + ± 1/8
FRACTIONS ± 1/64
X ± .03
XX ± .015
XXX ± .005
ANGLES ± 1
SURFACE 250
DIMENSIONED (X) ARE REFERENCE
ALL GEOMETRIC DIMENSIONING & TOLERANCING PER ANSI Y14.5-2009

TITLE: ADDITIVE CABINET ASSY CLASS 1 DIV 2

SIZE: D | DWG No.: 1046973 | REV: 1 | SHT 3 OF 3 | SCALE: 1:1 | DO NOT SCALE

DRAWN BY: P.BRENNAN | DATE: 3/28/2012 | CHECKED STANDARDS: P.BRENNAN 3/28/2012 | CHECKED DESIGN: 3/28/2012 | WEIGHT TOTAL: | APPROVED BY: D.HOBBS | DATE: 3/28/2012

Robbins

www.TheRobbinsCompany.com

1046973

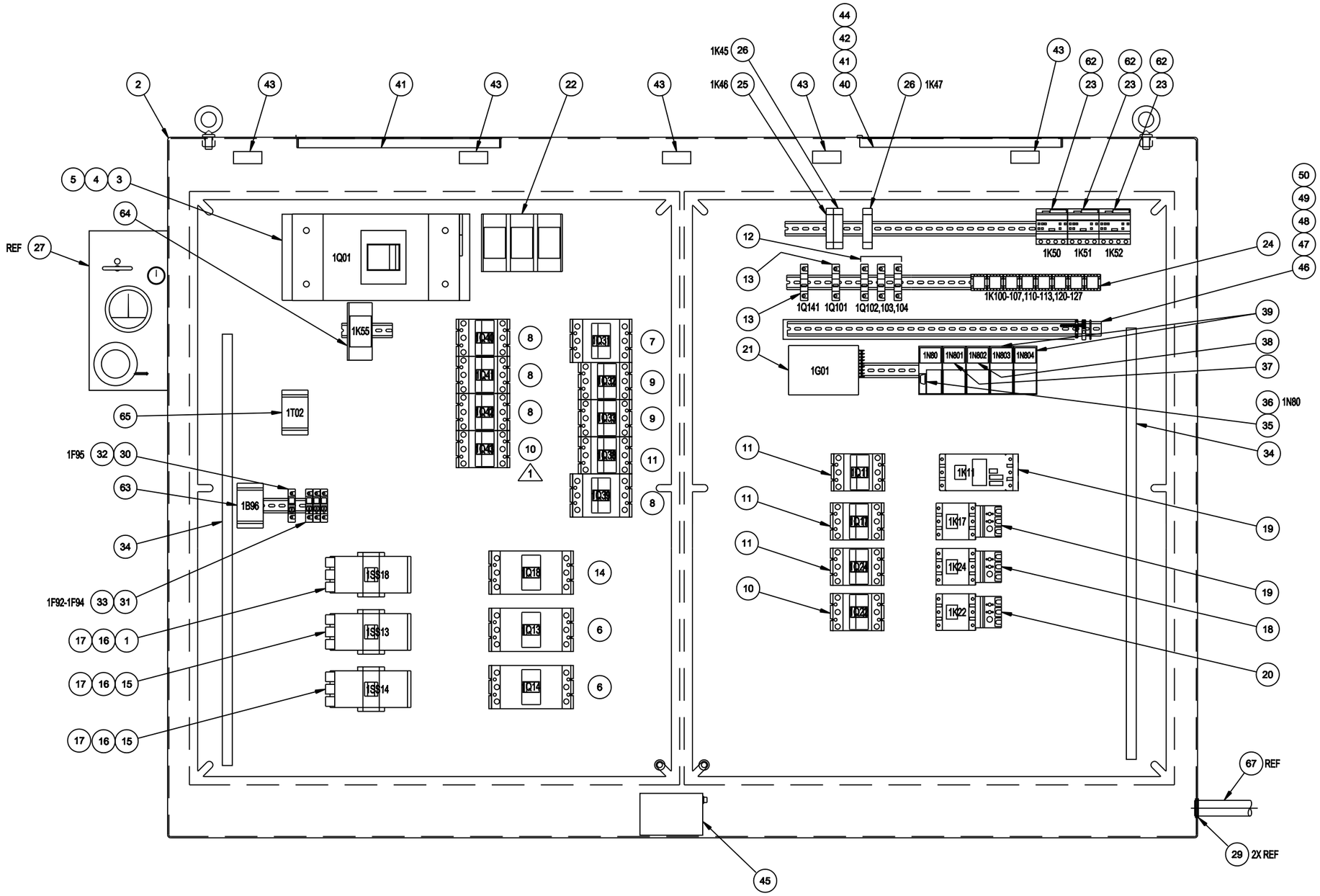

FRONT VIEW - PANEL LAYOUT

REV	DESCRIPTION	REVD BY/ DATE	APPD BY/ DATE
1	ADDED ITEM 10 CIRCUIT BREAKER	DSS 28SEP12	D.HOBBS 28SEP12

TITLE: MAIN ELECTRICAL CABINET FWD ASSY, SAN FRANCISCO

MACHINE	NEXT ASSY
EPB2016-378/377	1049350

UNLESS NOTED ALL DIMS ARE mm

TOLERANCES UNLESS NOTED

FOR [mm]	MACHINED [mm]
0-300 ± 1.5	X ± 1.5
300-1000 ± 3	X.X ± 1.0
1000-9000 ± 6	X.XX ± .40
9000+ ± 12	X.XXX ± .100
	ANGLES ± 1
	SURFACE FINISH

THIRD ANGLE PROJECTION

DIMENSIONS (D) ARE REFERENCE

ALL GEOMETRIC DIMENSIONING & TOLERANCING PER ANSI Y14.5-2009

SIZE	DWG No.	REV	SHT	SCALE
D	1047441	1	3 of 3	1:5 DO NOT SCALE

DRAWN BY P.BRENNAN DATE 4/13/2012

CHECKED/ENGINEER P.BRENNAN

CHECKED/DESIGN D.HOBBS

WEIGHT TOTAL

APPROVED BY D.HOBBS DATE 4/13/2012

Robbins

www.TheRobbinsCompany.com

PROPRIETARY NOTICE
The information disclosed on this drawing is the property of The Robbins Company, and permission for use of such property, in detail or in principle, must be obtained from The Robbins Company. It shall not be used, reproduced, copied, or disclosed to others in whole or in part, directly or indirectly, for any purpose without prior written permission of The Robbins Company. Any such use, reproduction or disclosure shall be unlawful and all rights with respect to this drawing are reserved by The Robbins Company, whether or not any portion thereof is copyrighted. Any such unauthorized use, reproduction or disclosure shall be unlawful and will subject the person, firm or corporation responsible to the maximum penalty under the law.

1047441

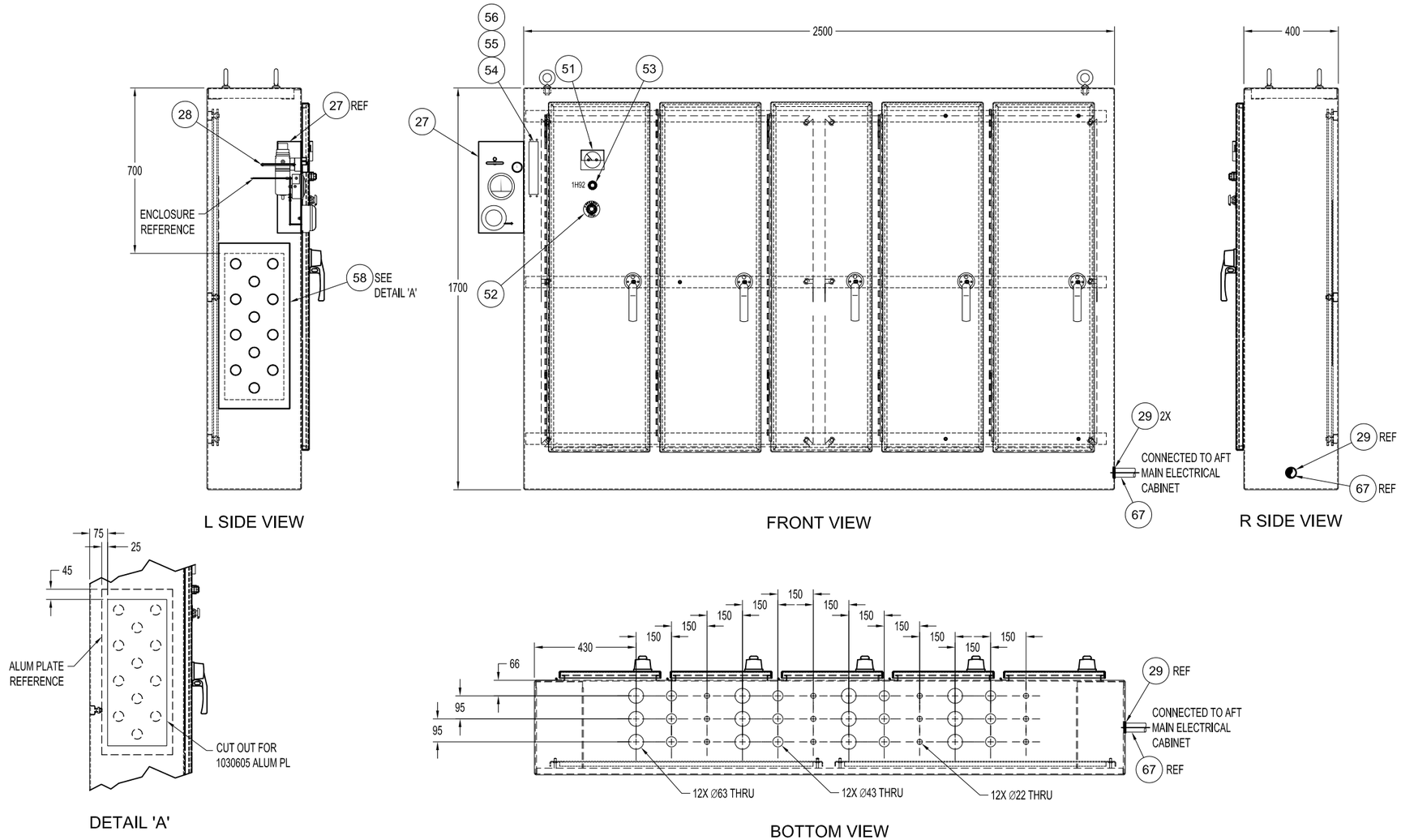

L SIDE VIEW

FRONT VIEW

R SIDE VIEW

DETAIL 'A'

BOTTOM VIEW

1047441

REV	DESCRIPTION	REV'D BY/ DATE	APP'D BY/ DATE

TITLE: MAIN ELECTRICAL CABINET FWD ASSY, SAN FRANCISCO

MACHINE	NEXT ASSY
EPB2016-376/377	1046350

UNLESS NOTED ALL DIMS ARE mm

TOLERANCES UNLESS NOTED

FAB (mm)		MACHINING (mm)	
0-300	± 1.5	X	± 1.5
300-1500	± 3	X.X	± 1.0
1500-6000	± 6	X.XX	± .40
6000+	± 12	X.XXX	± .100
		ANGLES	± 1
		SURFACE	63

THIRD ANGLE PROJECTION

DIMENSIONS (X) ARE REFERENCE

ALL GEOMETRIC DIMENSIONING & TOLERANCING PER ANSI Y14.5-2009

SIZE	DWG No.	REV	SHT	SCALE
D	1047441	0	2 OF 3	1:10

DO NOT SCALE

DRAWN BY	CHECKED STANDARDS
P.BRENNAN	P.BRENNAN
DATE 4/13/2012	CHECKED DESIGN D.HOBBS
WEIGHT TOTAL	APPROVED BY D.HOBBS
	DATE 4/13/2012

Robbins

www.TheRobbinsCompany.com

PROPRIETARY NOTICE
The information disclosed herein is the sole property of The Robbins Company and remains the sole property. It shall not be disclosed in all or part, used by, or disclosed to any other party without prior written consent of The Robbins Company. By accepting this information, recipient agrees to abide by the terms of the Robbins Company Proprietary Information Agreement and to the conditions, that material is not to be used, and is to be returned upon request to The Robbins Company.

NOTES:

1. WIRE PER MACHINE SCHEMATIC.
2. ALL COMPONENTS SHALL BE IDENTIFIED BY LABELS.
3. ALL TERMINALS AND WIRING ABOVE 55 VOLTS SHALL BE PROTECTED AGAINST ELECTRICAL SHOCK (DIRECT AND INDIRECT CONTACT), BY USE OF INSULATED BARRIERS AND SHIELDS.
4. CERTIFY AND MARK ASSEMBLY AS CE COMPLIANT.

5 PROVIDE (12) X 2-1/2" DIA. (2" CONDUIT TRADE SIZE) HOLE IN APPROX. POSITION AS SHOWN. PLUG WITH SEAL PLUG.

6 PROVIDE (12) X 1-3/8" DIA. (1-1/4" CONDUIT TRADE SIZE) HOLE IN APPROX. POSITION AS SHOWN. PLUG WITH SEAL PLUG.

7 PROVIDE (12) X 7/8" DIA. (1/2" CONDUIT TRADE SIZE) HOLE IN APPROX. POSITION AS SHOWN. PLUG WITH SEAL PLUG.

8. PHYSICAL LAYOUT SHOWN IS GENERAL ONLY. CABINET BUILDER CAN RE-ARRANGE COMPONENTS LAYOUT AS REQUIRED.

	QTY	PART No.	DESCRIPTION	DWG No.	Component/Vendor ID	ITEM
	1	A116347-2	CUBE20 DIG OUT PROFIBUS	A116347	1N802	38
	2	A116347-4	CUBE20 ANA IN PROFIBUS	A116347	1N803, 804	39
	1	1028504	CABLE, JUMPER, 120VAC , 5FT	1028500		40
	2	1028502	LAMP, CABINET, LED, 489mm	1028500		41
	1	1028505	CONNECTOR, END TO END	1028500		42
	5	A98079-10	DOOR SWITCH	A98079		43
	1	1028506	SWITCHED CABLE AND TERMINATOR	1028500		44
	1	A98079-5	HEATER, 200W, 120V WITH THERMOSTAT	A98079		45
	300	1029672	TERMINAL BLOCK, GREY	1029720		46
	10	1029675	END SECTION GREY	1029720		47
	10	1029677	END STOP, 36mm	1029720		48
	2	1029679	DINRAIL 2 METER	1029720		49
	10	1029676	JUMPER, 10 POLE	1029720		50
	1	A39666-1	VOLTMETER, 0-600V	A39666	1P01	51
	1	1028888	PUSHBUTTON, ESTOP, 30mm, 3 NC / 1 NO	1028888		52
	1	A90638-6	INDICATOR LIGHT RED, 24V	A90638	1H92	53
	1	1030709	FLANGE HANDLE, S7 FRAME	1030700		54
2	1	1050087	FLANGE MECHANISM, T7 FRAME	1030700		55
	1	1030717	CABLE, 48", S7 FRAME	1030700		56
	-					57
	1	1030605	ALUMINUM PLATE 300x700	1030605		58
	12	1027670	SEAL PLUG, 2" CONDUIT HOLE	1027662		59
	12	1027668	SEAL PLUG, 1-1/4" CONDUIT HOLE	1027662		60
	12	1027664	SEAL PLUG, 1/2" CONDUIT HOLE	1027662		61
5	3	A98083-1	DIODE SUPPRESSOR	A98083	1K50-52	62
6	1	A122909-1	VOLTAGE MONITOR, 3PH 600V	A122909	1B96	63
7	1	A121807-1	RELAY, 30A, DPDT, 24VDC COIL	A121807	1K55	64
	1	A7258	TRANSFORMER, POTENTIAL 4:1	A7258	1T02	65
	1	A108562-143	NIPPLE, 1-1/2" X 8" PIPE	A108562		67
1	1	1045366	BUSS BAR COMPONENTS, ASSY, RITTAL	1045366		68

	QTY	PART No.	DESCRIPTION	DWG No.	Component/Vendor ID	ITEM
	1	B122266-4	SOFTSTART, 55KW, 104A	B122266	1K18	1
	1	D117527-1	ENCL, 2500x1700x400, 5DR, LH FLG	D117527		2
	1	A93352-4	CIRCUIT BREAKER, 1200A, 3P	A93352	1Q01	3
	2	A93352-3	LUG KIT, S7	A93352	1Q01	4
	2	A93366-7	TERMINAL COVER	A93366	1Q01	5
	2	1027557	CIRCUIT BREAKER, 250A, GF, T4	1027530	1Q13, 14	6
	1	1027544	CIRCUIT BREAKER, 100A, GF, T3	1027532	1Q31	7
	4	1027539	CIRCUIT BREAKER, 50A GF, T2	1027531	1Q39, 40, 41, 42	8
	2	1027537	CIRCUIT BREAKER, 30A, GF, T2	1027531	1Q32, 33	9
3	2	1027538	CIRCUIT BREAKER, 40A, GF, T2	1027531	1Q22, 43	10
	4	1027534	CIRCUIT BREAKER, 15A, GF, T2	1027531	1Q24, 11, 17, 38	11
	3	A98068-7	CIRCUIT BREAKER, 15A 1POLE	A98068	1Q102, 103, 104	12
	2	A98068-4	CIRCUIT BREAKER, 5A, 1POLE	A98068	1Q101, 141	13
	1	1027556	CIRCUIT BREAKER, 200A, GF, T4	1027556	1Q18	14
	2	B122266-5	SOFTSTART, 75KW, 130A	B122266	1SS13, 14	15
	6	B122266-10	LUG KIT, SOFTSTART PSE142-170	B122266	1SS13, 14, 18	16
	3	B122266-12	TERMINAL SHIELD, SOFTSTART PSE142-170	B122266	1SS13, 14, 18	17
	1	A108214-2	STARTER, 1.6-2.4A, IEC, 690V, 120V COIL	A108214	1K24	18
	2	A108214-1	STARTER, 0.18KW, 690V, 120V COIL	A108214	1K17, 11	19
	1	A108214-7	STARTER, 16-24A, IEC, 690V, 120V COIL	A108214	1K22	20
	1	A78734-1	POWER SUPPLY, 20A, 24VDC	A78734	1G01	21
	1	A110102-5	POWER DISTR BLOCK, 620A 3P	A110102		22
	3	A104506-6	CONTACTOR, 4 POLE, 24VDC	A104506	1K50-52	23
	20	1030023	RELAY, 1PDT, 24VDC	1030073	1K100-107, 1K110-113, 1K120-127	24
	1	1028332	RELAY, SAFETY EXPANDER, 4 NO / 1 NC	1028332	1K46	25
	2	1028204	RELAY, SAFTY, 24V, 3 NO / 1 NC	1028204	1K45, 47	26
	1	1047080-1	PURGE SYSTEM WITH EXP PRESSURE LOSS ALARM SWITCH	1047080		27
	1	1047080-5	1/2" FLUSH CONNECTOR	1047080		28
	4	1047461-5	LOCKNUT, 1-1/2" SEALING	1047461		29
	1	A108369-10	FUSE HOLDER 1-1/2x13/32, 1 POLE	A108369	1F95	30
	3	A99193-2	FUSE, 1A CLASS J	A99193	1F92-94	31
	1	A99508-5	FUSE TIME DELAY, 0.25A, 250V	A99508	1F95	32
	1	A108369-3	FUSE HOLDER, 3P, 30A CLASS J	A108369	1F92-94	33
	2	A117566-1	GROUND BUS	A117566		34
	1	A116347-3	CUBE20 BUSNODE PROFIBUS	A116347	1N80	35
	1	1030498	PROFIBUS CONNECTOR	1030498	1N80	36
	1	A116347-1	CUBE20 DIG IN PROFIBUS	A116347	1N801	37

REV	DESCRIPTION	REVD BY / DATE	APPD BY / DATE
3	UPDATED REV STATUS, CHG'D QTY ITEM 10 WAS 1	DBS 28SEP12	D.HOBBS 28SEP12
2	CHANGED THE PART NUMBER AND DESCRIPTION ON ITEM 55. ADDED DWG NUMBER AND WEIGHT TOTAL.	PMB 9/17/2012	DH 9/17/2012
1	ADDED ITEM 68 TO BOM	PMB 5/14/2012	DH 5/14/2012

MACHINE	NEXT ASSY
EMB2016-376/377	1046350

UNLESS NOTED ALL DIMS ARE mm
TOLERANCES UNLESS NOTED

0-300	± 1.5	X	± 1.5
300-1500	± 3	X.X	± 1.0
1500-6000	± 6	X.XX	± .40
6000+	± 12	X.XXX	± .100
		ANGLES	± 1°
		SURFACE FINISH	63

THIRD ANGLE PROJECTION
DIMENSIONS (X) ARE REFERENCE.
ALL GEOMETRIC DIMENSIONING & TOLERANCING PER ANSI Y14.5-2009

PROPRIETARY NOTICE: This information derived herein, is the sole property of The Robbins Company and is not to be published in full or part, used by or disclosed to any third party without the written consent of The Robbins Company. By accepting this information, recipient agrees to indemnify The Robbins Company for any loss or damage caused by or resulting from any unauthorized use of this information. This material is loan only, and upon request is to be returned to The Robbins Company.

MAIN ELECTRICAL CABINET
FWD ASSY, SAN FRANCISCO

SIZE	DWG No.	REV	SHT	SCALE
D	1047441	3	1 of 3	1:10 DO NOT SCALE

DRAWN BY	CHECKED ENGINEER	CHECKED DESIGN	APPROVED BY
P.BRENNAN 4/13/2012	P.BRENNAN	D.HOBBS	D.HOBBS 4/13/2012

WEIGHT TOTAL: 2100

Robbins

www.TheRobbinsCompany.com

1047441

3	1
2	0
1	3
SHT	REV

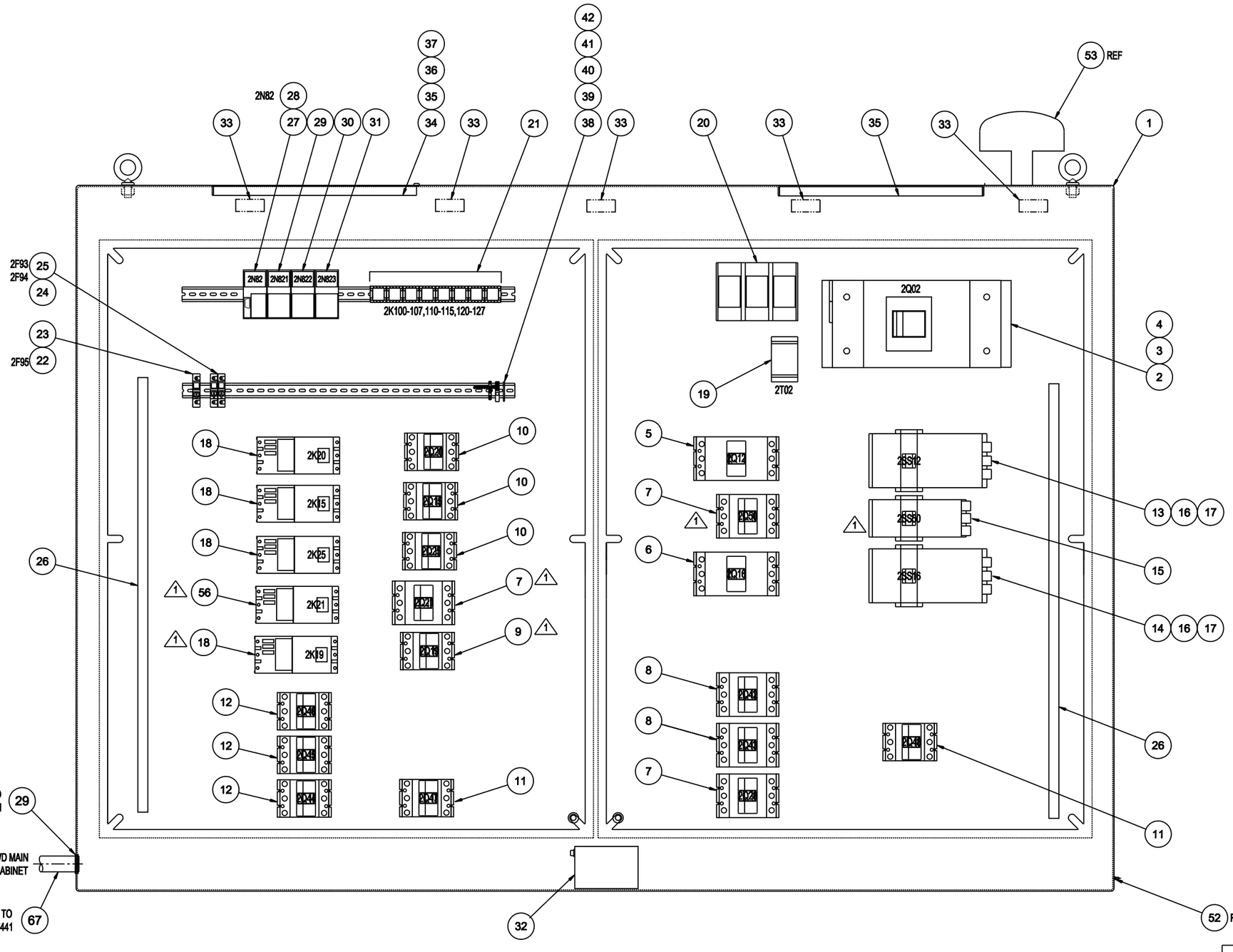

FRONT VIEW - PANEL LAYOUT

REV	DESCRIPTION	DBS 28SEP12	D.HOBBS 28SEP28
1	ADDED ITEMS 7, 9, 18, 21, CHGD 2026 & 19826 TO 50	REVD BY DATE	APPD BY DATE

TITLE: MAIN ELECTRICAL CABINET AFT ASSY, SAN FRANCISCO

MACHINE	NEXT ASSY
EP82016-376377	1046350

UNLESS NOTED ALL DIMS ARE mm

TOLERANCES UNLESS NOTED

0-300	± 1.0
300-1500	± 3
1500-6000	± 6
6000+	± 12
X	± 1.0
.XX	± 1.0
.XXX	± .40
.XXXX	± .100
ANGLES	± 1
SURFACE	63

THIRD ANGLE PROJECTION

DIMENSIONS (X) ARE REFERENCE

ALL GEOMETRIC DIMENSIONING & TOLERANCING PER ANSI Y14.5-2009

SIZE D | DWG No. 1047442 | REV 1 | SHT 3 of 3 | SCALE 1:5

DO NOT SCALE

DRAWN BY P.BRENNAN DATE 4/13/2012

CHECKED BY P.BRENNAN

CHECKED DESIGN D.HOBBS

APPROVED BY D.HOBBS DATE 4/13/2012

WEIGHT LOCAL

Robbins

www.TheRobbinsCompany.com

1047442

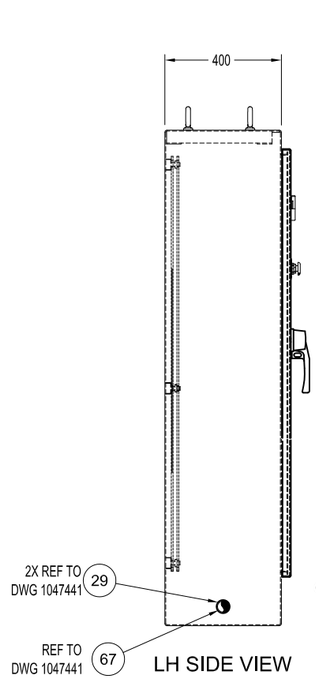

LH SIDE VIEW

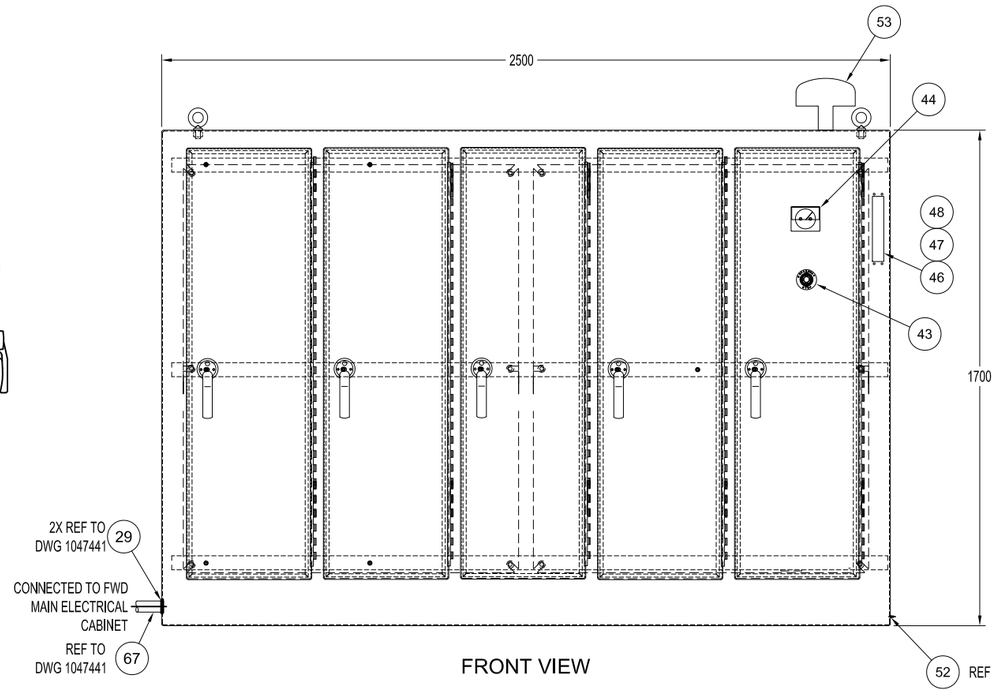

FRONT VIEW

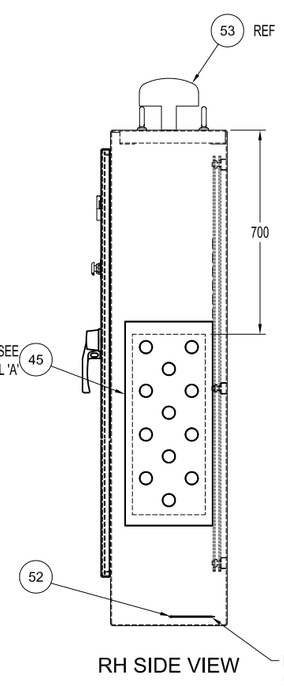

RH SIDE VIEW

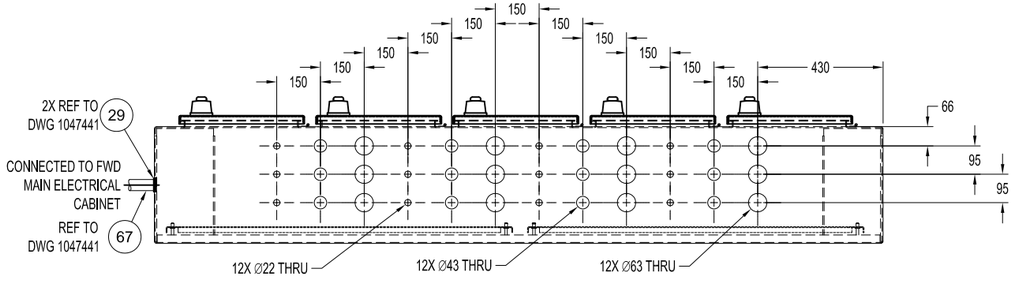

BOTTOM VIEW

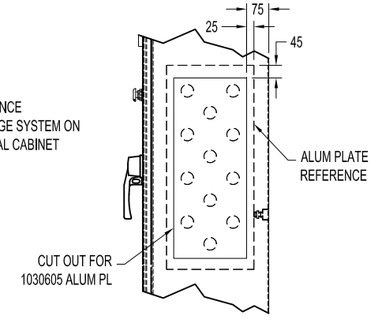

DETAIL 'A'

PROPRIETARY NOTICE
The information disclosed hereon is the sole property of Robbins Spacecraft, Inc. and is considered proprietary. It shall not be duplicated in full or part, used by, or disclosed to any person, firm or corporation for any purpose other than that for which it is furnished to the Company. By accepting this information, recipient agrees to make it available only to employees within his organization who have a need to know in connection with the conditions. This material is on loan and, upon request, is to be returned to Robbins Spacecraft, Inc. or destroyed.

MACHINE	NEXT ASSY
EPB2016-378/377	1046350

UNLESS NOTED ALL DIMS ARE mm
TOLERANCES UNLESS NOTED

FRACTIONS	DECIMALS	ANGLES
0-300 ± 1/8	X ± 1.0	± 1°
300-1500 ± 3/16	X.X ± 0.5	
1500-6000 ± 1/4	X.XX ± .40	
6000+ ± 1/2	X.XXX ± .100	
	SURFACE 63	

THIRD ANGLE PROJECTION

DIMENSIONS (X.XX) ARE REFERENCE
ALL GEOMETRIC DIMENSIONING & TOLERANCING PER ANSI Y14.5-2009

REV	DESCRIPTION	REV'D BY / DATE	APP'D BY / DATE

TITLE: MAIN ELECTRICAL CABINET AFT ASSY, SAN FRANCISCO

SIZE	DRWG NO.	REV	SHT	SCALE
D	1047442	0	2 of 3	1:10

DO NOT SCALE

DRAWN BY: P.BRENNAN 4/13/2012
CHECKED DESIGN BY: P.BRENNAN
CHECKED DESIGN BY: D.HOBBS
WEIGHT TOTAL:
APPROVED BY: D.HOBBS 4/13/2012

Robbins

www.TheRobbinsCompany.com

1047442

NOTES:

1. WIRE PER MACHINE SCHEMATIC.
2. ALL COMPONENTS SHALL BE IDENTIFIED BY LABELS.
3. ALL TERMINALS AND WIRING ABOVE 55 VOLTS SHALL BE PROTECTED AGAINST ELECTRICAL SHOCK (DIRECT AND INDIRECT CONTACT), BY USE OF INSULATED BARRIERS AND SHIELDS.
4. CERTIFY AND MARK ASSEMBLY AS CE COMPLIANT.
5. PROVIDE (12) X 2-1/2" DIA. (2" CONDUIT TRADE SIZE) HOLE IN APPROX. POSITION AS SHOWN. PLUG WITH SEAL PLUG.
6. PROVIDE (12) X 1-3/8" DIA. (1-1/4" CONDUIT TRADE SIZE) HOLE IN APPROX. POSITION AS SHOWN. PLUG WITH SEAL PLUG.
7. PROVIDE (12) X 7/8" DIA. (1/2" CONDUIT TRADE SIZE) HOLE IN APPROX. POSITION AS SHOWN. PLUG WITH SEAL PLUG.
8. PHYSICAL LAYOUT SHOWN IS GENERAL ONLY. CABINET BUILDER CAN RE-ARRANGE COMPONENTS LAYOUT AS REQUIRED.

	QTY	PART No.	DESCRIPTION	DWG No.	Component/Vendor ID	ITEM
	1	A98079-5	HEATER, 200W, 120V WITH THERMOSTAT	A98079		32
	5	A98079-10	DOOR SWITCH	A98079		33
	1	1028505	CONNECTOR, END TO END	1028500		34
	2	1028502	LAMP, CABINET, LED, 489mm	1028500		35
	1	1028504	CABLE, JUMPER, 120VAC , 5FT	1028500		36
	1	1028506	SWITCHED CABLE AND TERMINATOR	1025800		37
3	300	1029672	TERMINAL BLOCK, GREY	1029720		38
	10	1029675	END SECTION GREY	1029720		39
	2	1029679	DINRAIL 2 METER	1029720		40
	10	1029676	JUMPER, 10 POLE	1029720		41
	10	1029677	END STOP, 36mm	1029720		42
	1	1028888	PUSHBUTTON, ESTOP, 30mm, 3 NC / 1 NO	1028888		43
	1	A39666-1	VOLTMETER, 0-600V	A39666	2P01	44
	1	1030605	ALUMINUM PLATE 300x700	1030605		45
	1	1030717	CABLE, 48", S7 FRAME	1030700		46
	1	1030709	FLANGE HANDLE, S7 FRAME	1030700		47
2	1	1050087	FLANGE MECHANISM, T7 FRAME	1030700		48
5	12	1027670	SEAL PLUG, 2" CONDUIT HOLE	1027662		49
6	12	1027668	SEAL PLUG, 1 1/4" CONDUIT NOLE	1027662		50
7	12	1027664	SEAL PLUG, 1/2" CONDUIT HOLE	1027662		51
	1	1047080-4	1/4" FLUSH CONNECTOR	1047080		52
	1	1047080-8	VENT	1047080		53
	1	1047080-10	ENCLOSURE WARNING NAMEPLATE - CLASS 1	1047080		54
1	1	1045366	BUSS BAR COMPONENTS, ASSY, RITTAL	1045366		55
3	1	A108214-8	STARTER, 24-40A, 690V, 120V COIL	A108214	2K21	56

	QTY	PART No.	DESCRIPTION	DWG No.	Component/Vendor ID	ITEM
	1	D117528-1	ENCL, 2500x1700x400, 5DR, RH FLG	D117528		1
	1	A93352-4	CIRCUIT BREAKER, 1200A, 3P	A93352	2Q02	2
	2	A93352-3	LUG KIT, S7	A93352	2Q02	3
	2	A93366-7	TERMINAL COVER	A93366	2Q02	4
	1	1027557	CIRCUIT BREAKER, 250A, GF, T4	1027530	2Q12	5
	1	1027556	CIRCUIT BREAKER, 200A, GF, T4	1027530	2Q16	6
3	3	1027544	CIRCUIT BREAKER, 100A, GF, T3	1027532	2Q21, 28, 50	7
	2	1027551	CIRCUIT BREAKER, 70A, GF, T3	1027532	2Q42, 43	8
	1	1027539	CIRCUIT BREAKER, 50A, GF, T2	1027531	2Q19	9
3	4	1027538	CIRCUIT BREAKER, 40A, GF, T2	1027531	2Q15, 20, 25, 49	10
	2	1027537	CIRCUIT BREAKER, 30A GF, T2	1027531	2Q47, 48	11
	3	1027534	CIRCUIT BREAKER, 15A, GF, T2	1027531	2Q44-46	12
	1	B122266-5	SOFTSTART, 75KW, 130A	B122266	2SS12	13
	1	B122266-4	SOFTSTART, 55KW, 104A	B122266	2SS16	14
3	1	B122266-1	SOFTSTART, 30KW, 60A	B122266	2SS50	15
	4	B122266-10	LUG KIT, SOFTSTART PSE142-170	B122266	2SS12, 16	16
	2	B122266-12	TERMINAL SHIELD, SOFTSTART PSE142-170	B122266	2SS12, 16	17
3	4	A108214-7	STARTER, 16-24A, IEC, 690V, 120V COIL	A108214	2K15, 20, 25, 19	18
	1	A7258	TRANSFORMER, POTENTIAL 4:1	A7258	2T02	19
	1	A110102-5	POWER DISTR BLOCK, 620A 3P	A110102		20
	22	1030023	RELAY, 1PDT, 24VDC	1030073	2K100-107, 2K110-115, 2K120-127	21
	1	A108369-10	FUSE HOLDER 1-1/2x13/32, 1 POLE	A108369	2F95	22
	1	A99508-5	FUSE TIME DELAY, 0.25A, 250V	A99508	2F95	23
	1	A108369-2	FUSE HOLDER, 2P, 30A CLASS J	A108369	2F93, 94	24
	2	A99193-2	FUSE, 1A CLASS J	A99193	2F93, 94	25
	2	A117566-1	GROUND BUS	A117566		26
	1	A116347-3	BUSE20 BUSNODE PROFIBUS	A116347	2N82	27
	1	1030498	PROFIBUS CONNECTOR	1030498		28
	1	A116347-1	CUBE20 DIG IN PROFIBUS	A116347	2N821	29
	1	A116347-2	CUBE20 DIG OUT PROFIBUS	A116347	2N822	30
	1	A116347-4	CUBE20 ANA IN PROFIBUS	A116347	2N823	31

REV	DESCRIPTION	REVD BY/ DATE	APPD BY/ DATE
3	UPDATED REV STATUS, CHGD 2026 TO 2029, ADDED 2021,ITEM 9 TO 20/18, ADDED 2049, 2K19, CHGD 25328 TO 25339 ADDED ITEM 56	PMB 9/17/2012	DH 9/17/2012
2	CHANGED THE PART NUMBER AND DESCRIPTION ON ITEM 48. ADDED DWG NUMBER AND WEIGHT TOTAL.	PMB 9/17/2012	DH 9/17/2012
1	ADDED ITEM 55 TO BOM	PMB 5/14/2012	DH 5/14/2012

3	1
2	0
1	3
SHT	REV

PROPRIETARY NOTICE
The information disclosed hereon, in the sole property of Robbins Company and is not to be used, reproduced or disclosed to others without the written permission of Robbins Company. By accepting this information, recipient agrees to use the information only for purposes authorized by Robbins Company. Any copying this information, without limiting the above, must include this notice. This material is on loan only, and must be returned to Robbins Company upon request. Unless otherwise specified in a written contract between Robbins Company and the recipient, the recipient shall be liable for any loss or damage caused by any breach of this notice.

MACHINE	NEXT ASSY
EPB2016-376377	1046350

UNLESS NOTED ALL DIMS ARE mm

TOLERANCES UNLESS NOTED

0-300	± 1.5
300-1000	± 3
1000-4000	± 8
4000+	± 12

X	± 1.5
XX	± 1.0
XXX	± .40
XXXX	± .100
ANGLES	± 1
SURFACE FINISH	63

DIMENSIONS (X) ARE REFERENCE

ALL GEOMETRIC DIMENSIONING & TOLERANCING PER ANSI Y14.5-2009

MAIN ELECTRICAL CABINET AFT ASSY, SAN FRANCISCO

SIZE	DWG No.	REV	SHT	SCALE
D	1047442	3	1 of 3	1:10

DO NOT SCALE

DRAWN BY	CHECKED BY/ENGINEER	APPROVED BY
P.BRENNAN 4/13/2012	P.BRENNAN	D.HOBBS

CHECKED DESIGN	WEIGHT TOTAL	APPROVED BY
D.HOBBS	2100	D.HOBBS 4/13/2012

Robbins

www.TheRobbinsCompany.com

1047442

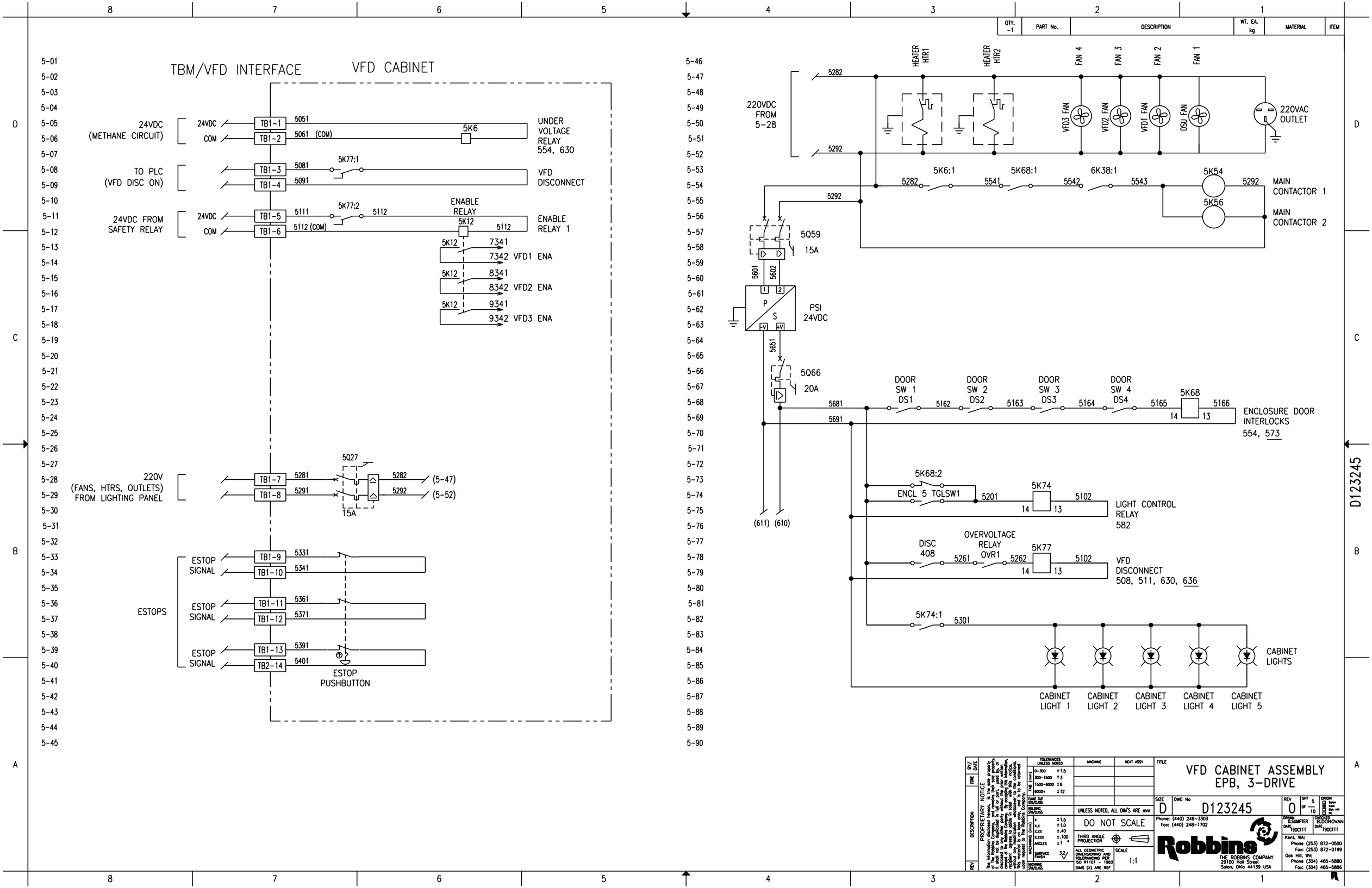

PROPRIETARY NOTICE

The information disclosed hereon, is the sole property of the Robbins Company, and shall not be duplicated in full or part, used by, or disclosed to any other party without the prior written consent of the Robbins Company. By accepting this information, recipient agrees to abide in total with this notice, without any modification whatsoever to the conditions. This material is on loan only, and is to be returned upon request to the Robbins Company.

TOLERANCES UNLESS NOTED

0-300	±1.5
300-1500	±3
1500-6000	±6
6000+	±12

FLUME CUT SRD/CLASS

BELDING SRD/CLASS

MACHINING (mm)

X	±1.5
X.X	±1.0
X.XX	±.40
X.XXX	±.100
ANGLES	±1°

SURFACE FINISH 3.2

MACHINING SRD/CLASS

MACHINE

NEXT ASSY

UNLESS NOTED, ALL DIM'S ARE mm

DO NOT SCALE

THIRD ANGLE PROJECTION

ALL GEOMETRIC DIMENSIONING AND TOLERANCING PER ISO R1101 - 1983

DIMS (X) ARE REF

SCALE 1:1

TITLE

VFD CABINET ASSEMBLY EPB, 3-DRIVE

SIZE D

DWG No D123245

REV 0

SHT 5 OF 10

ORIGIN Sales Rent Oak Hill RC

DRAWN D.SUMPTER DATE 19OCT11

CHECKED B.DONOVAN DATE 19OCT11

Phone: (440) 248-3303
Fax: (440) 248-1702

Robbins

THE ROBBINS COMPANY
29100 Hall Street
Solon, Ohio 44139 USA

Kent, WA:
Phone (253) 872-0500
Fax: (253) 872-0199

Oak Hill, WV:
Phone (304) 465-5880
Fax: (304) 465-5886

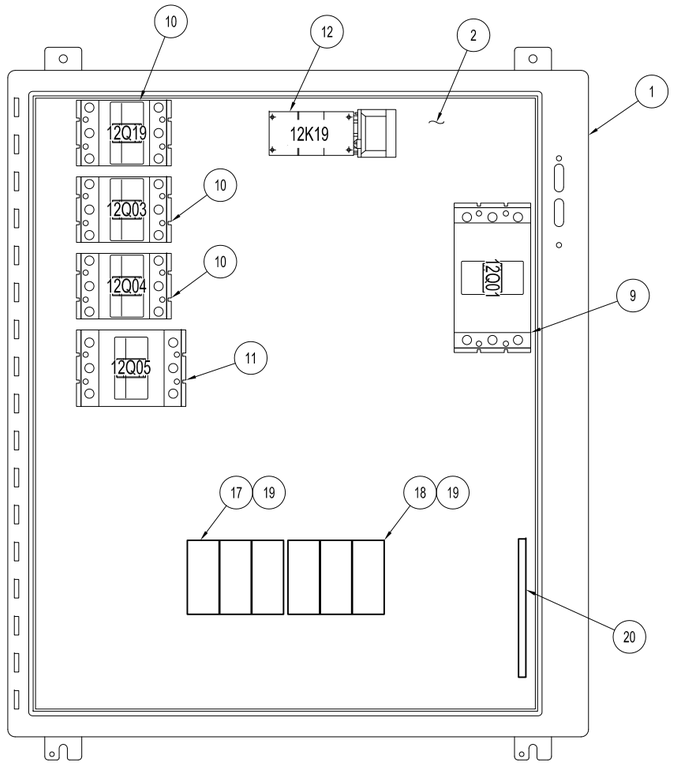

FRONT VIEW
DOOR REMOVED

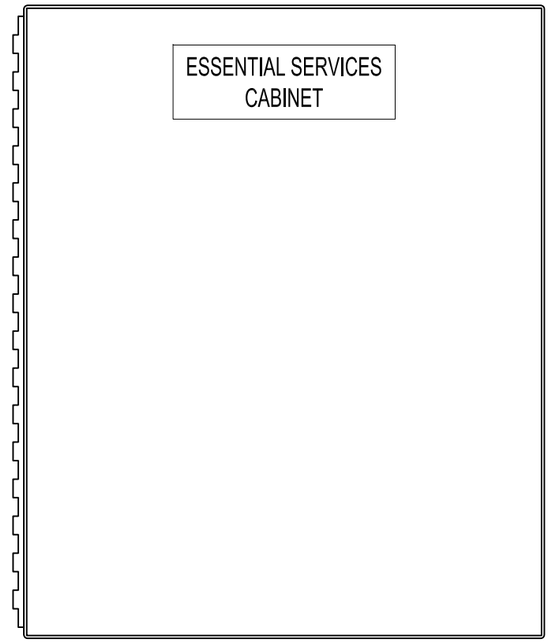

FRONT VIEW DOOR

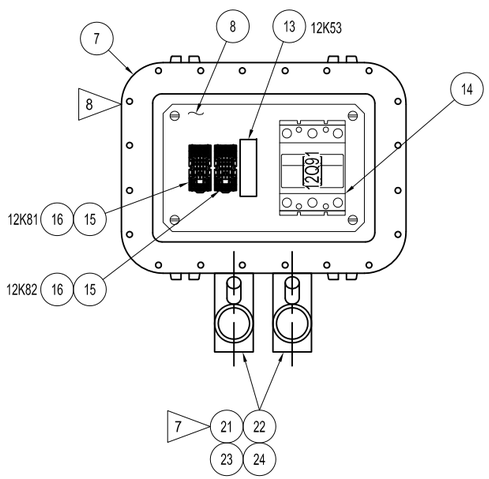

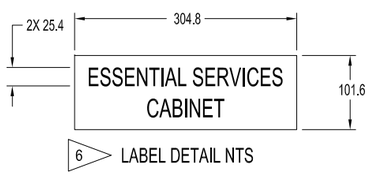

QTY	PART No.	DESCRIPTION	DWG No.	Component/Vendor ID	ITEM
1	1047306-7	DISCONNECT ENCLOSURE, 36H x 32W x 16D			1
1	D71683-63	PANEL, 36 x 30			2
1	1032285	DISCONNECT MECHANISM	1030700		3
1	1032280	DISCONNECT HANDLE	1030700		4
1	1030714	DISCONNECT, CABLE, 36"	1030700		5
1	1030724	KIT, DOOR, RH, 2 POINT	1030700		6
1	A99569-1	EXPLOSION POOF ENCLOSURE 8 x 12 x 4			7
1	A99569-2	STEEL BACKPAN, 12 x 8			8
1	1027549	CIRCUIT BREAKER, 225A, GF, T4	1027530	12Q01	9
3	1027538	CIRCUIT BREAKER, 40A, GF, T2	1027531	12Q19, 12Q03 - 04	10
1	1027551	CIRCUIT BREAKER, 70A, GF, T3	1027532	12Q05	11
1	A108214-7	STARTER, 16-24A, 600V, 120V COIL		12K19	12
1	A99500-1	PHASE FAULT RELAY 480V		12K53	13
1	1027534	CIRCUIT BREAKER, 15A, GF, T2	1027531	12Q91	14
2	A34227-14	CONTROL RELAY, IDEC		12K81, 12K82	15
2	A34227-11	SOCKET, RELAY, IDEC		12K81, 12K82	16
1	A99191-1	POWER DIST BLOCK, 3P, 480V			17
1	A110102-5	POWER DIST BLOCK, 3P, 620A			18
6	A99191-3	SAFETY COVER, 1 POLE			19
1	A117566-1	GROUND BUS			20
2	A110249-3	XP SEAL OFF FITTING MALE - FEMALE, 1"			21
2	A110249-11	ADACO SEALING CEMENT 16 oz			22
2	A110249-12	ADACO PACKING FIBER 16 oz			23
4	A78250-6	CORD GRIP 19-22mm, 1"			24

NOTES:

1. WIRE PER MACHINE SCHEMATIC.
2. ALL COMPONENTS SHALL BE IDENTIFIED BY LABELS.
3. ALL TERMINALS AND WIRING ABOVE 55 VOLTS SHALL BE PROTECTED AGAINST ELECTRICAL SHOCK (DIRECT AND INDIRECT CONTACT), BY USE OF INSULATED BARRIERS AND SHIELDS.
4. CERTIFY AND MARK ASSEMBLY AS CE COMPLIANT.
5. PHYSICAL LAYOUT SHOWN IS GENERAL ONLY. CABINET BUILDER CAN RE-ARRANGE COMPONENT LAYOUT AS REQUIRED. DOORS REMOVED IN VIEWS.

6 LABEL TO BE BLACK LETTERING ON WHITE PHENOLIC.

7 USE #12 AWG 6 CONDUCTORS SOW FLEXIBLE CABLE OR EQUAL.

8 MOUNT XP BOX ON OR CLOSES TO THE ESSENTIAL SERVICES CABINET.

PROPRIETARY NOTICE
The information disclosed hereon is the sole property of Robbins Company. By accepting this information, recipient shall not be disclosed in whole or part, used by, or disclosed to any other person or entity for any purpose without the express written permission of Robbins Company. By accepting this information, recipient agrees to indemnify Robbins Company for any loss or damage caused by unauthorized disclosure, use or reproduction. This notice is not an admission of publication.

MACHINE	NEXT ASSY
EPB2016-376/377	1046350

UNLESS NOTED ALL DIMS ARE mm

TOLERANCES UNLESS NOTED

FRACTIONS	ANGULAR	DECIMAL
0-300 ± 1/8		X ± 5
300-1500 ± 3/16		XX ± 10
1500-6000 ± 1/4		XXX ± 40
6000+ ± 1/2		XXXX ± 100
		HOLES ± 1
		SURFACE 125µin

DIMENSIONS (X) ARE REFERENCE.

ALL GEOMETRIC DIMENSIONING & TOLERANCING PER ANSI Y14.5-2009

REV.	DESCRIPTION	REV'D BY/ DATE	APP'D BY/ DATE

TITLE: ESSENTIAL SERVICES CABINET
CLASS 1 / DIV 2

SIZE	DWG No.	REV	SHT	SCALE
D	1048454	0	1 OF 1	1:4 DO NOT SCALE

DRAWN BY: P.BRENNAN DATE: 5/4/2012
CHECKED BY (MFG): P.BRENNAN
CHECKED DESIGN: D.HOBBS
WEIGHT TOTAL:
APPROVED BY: D.HOBBS DATE: 5/4/2012

Robbins

www.TheRobbinsCompany.com

1048454

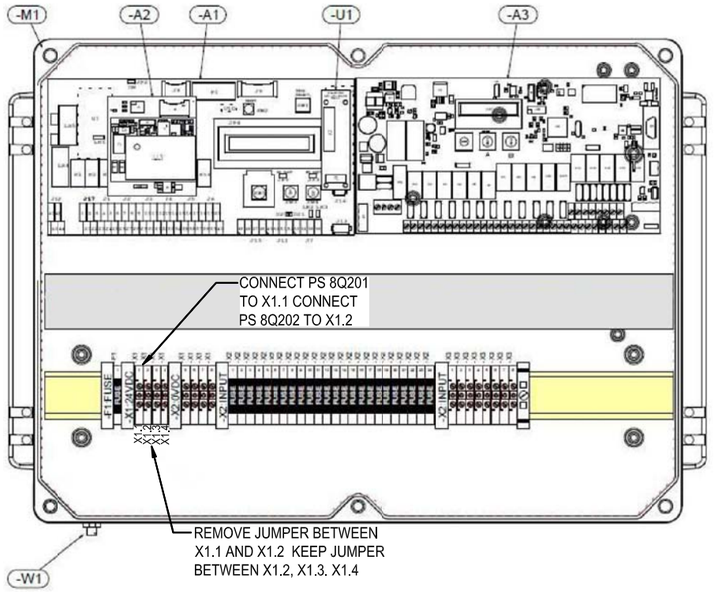

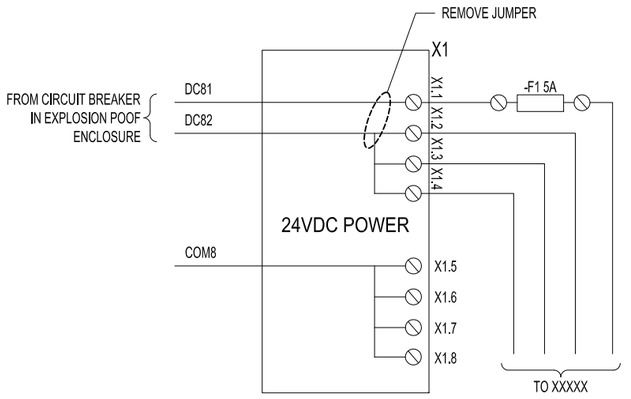

WIRING DETAIL

REV	DESCRIPTION	REVD BY / DATE	APPD BY / DATE
0	ISSUED FOR APPROVAL	TMH 27.04.2011	

CAVOTEC USA

CAVOTEC Inspired Engineering

4. Terminal Unit
Terminal Unit

Project no: 500010L1A

Scale: 1:1

Drawing no: 500010L1A

Sheet: 5

All rights in this document and in the data contained in it are reserved to Cavotec Micro-controls Ltd. This document may not be reproduced or disclosed to third parties without express written authority and may not be used for any purpose not expressly permitted by agreement with Cavotec Micro-controls Ltd. © Cavotec Micro-controls Ltd.

PROPRIETARY NOTICE
The information disclosed herein is the sole property of The Robbins Company and is not to be disclosed to, used by, or duplicated in whole or part, used by, or disclosed to any person, firm or corporation for any purpose whatsoever without the written permission of The Robbins Company. By accepting this information, recipient agrees to indemnify The Robbins Company for any loss or injury caused by unauthorized use. This material is and will remain the exclusive property of The Robbins Company and any such use, disclosure or duplication without the express written consent of The Robbins Company is unauthorized and unlawful.

MACHINE	NEXT ASSY
EPB2016-378/377	

UNLESS NOTED ALL DIMS ARE mm

TOLERANCES UNLESS NOTED

FRACTIONS	DECIMALS	ANGLES
0-300 ± 1/8	X ± 1.0	± 1
300-1500 ± 3/8	X.X ± 0.5	
1500-6000 ± 1/2	X.XX ± .40	
6000+ ± 1/2	X.XXX ± .160	

THIRD ANGLE PROJECTION

SURFACE FINISH 63√

DIMENSIONS ARE REFERENCE

ALL GEOMETRIC DIMENSIONING & TOLERANCING PER ANSI Y14.5-2009

TITLE: ERECTOR ELECTRICAL CABINET CLASS 1/ DIV 2

SIZE	DWG No.	REV	SHT	SCALE
D	1049363	0	3 of 3	1:1

DO NOT SCALE

DRAWN BY	CHECKED STANDARDS
P.BRENNAN	P.BRENNAN
DATE	CHECKED DESIGN
5/17/2012	D.HOBBS
WEIGHT TOTAL	APPROVED BY
	D.HOBBS
	DATE
	5/17/2012

Robbins

www.TheRobbinsCompany.com

1049363

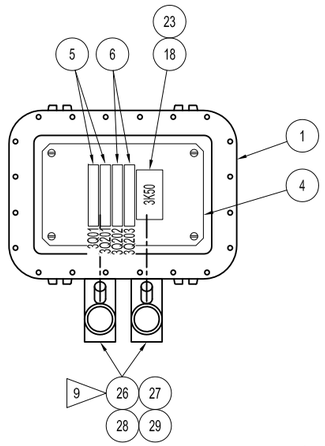

NOTES:

1. WIRE PER MACHINE SCHEMATIC .
2. REFER TO PLC INSTALLATION DRAWING.
3. ALL COMPONENTS SHALL BE IDENTIFIED BY LABELS.
4. ALL TERMINALS AND WIRING ABOVE 55 VOLTS SHALL BE PROTECTED AGAINST ELECTRICAL SHOCK (DIRECT AND INDIRECT CONTACT), BY USE OF INSULATED BARRIERS AND SHIELDS.
5. CERTIFY AND MARK ASSEMBLY AS CE COMPLIANT.
6. PHYSICAL LAYOUT IS GENERAL ONLY. CABINET BUILDER CAN RE-ARRANGE COMPONENT LAYOUT AS REQUIRED.
7. REFER TO HYDRAULIC SCHEMATIC . QUANTITY VARIES DEPENDING UPON MACHINE.
8. MOUNT IN DOOR.
9. USE #12 AWG 6 CONDUCTORS SOW FLEXIBLE CABLE OR EQUAL.

QTY	PART No.	DESCRIPTION	DWG No.	Component/Vendor ID	ITEM
1	A99569-1	EXPLOSION PROOF ENCLOSURE 8 X 12 X 4			1
1	D71683-77	PANEL, 45 X 27, #A-48P30			2
1	D71683-76	BOX JUNCTION, 48 X 30 X 10			3
1	A99569-2	STEEL BACKPAN, 12 X 8			4
2	A98068-4	CIRCUIT BREAKER, 5A 1 POLE		3Q01, 3Q201	5
2	A98068-7	CIRCUIT BREAKER, 15A, 1 POLE		3Q202, 3Q203	6
2	A116347-3	CUBE20 BUSNODE, PROFIBUS		3N60, 3N61	7
2	A116347-1	CUBE20 DIG IN 32PT PROFIBUS		3N601	8
2	A116347-2	CUBE20 DIG OUT 32PT PROFIBUS		3N602	9
1, 2	A116347-4	CUBE20 ANA IN 4CH PROFIBUS		3N603, 3N604 3N611 - 614, 3N616	10
1, 2	A116347-5	CUBE20 ANA OUT 4CH PROFIBUS		3N615	11
4	1029675	END SECTION GREY	1029720		12
1	1029679	DINRAIL, 2 METER	1029720		13
5	1029676	JUMPER, 10 POLE	1029720		14
4	1029677	END STOP, 36mm	1029720		15
150	1029672	TERMINAL BLOCK, GREY	1029720		16
1	A78734-1	POWER SUPPLY, 24VDC 20AMP		3G01	17
1	A104506-6	CONTACTOR, 3POL+AUX, 24VDC		3K50	18
32	1035268	RELAY, 1PDT 24VDC, 5A, CL1/DIV2		3K100-107, 3K110-117 3K120-127, 3K130-137	19
REF	A110426-1	EPC MODULE			20
2	1030498	PROFIBUS CONNECTOR, 90DEG			21
1	B74867-4	E-STOP MAINTAINED 1 NO/1 NC			22
1	A98083-1	DIODE SUPPRESSOR		3K50	23
2	A113131-1	CONTACT BLOCK 1 NO/1 NC			24
1	A79309-5	ESTOP LEGEND RING, 70MM PLASTIC YELLOW/RED			25
2	A110249-3	XP SEAL OFF FITTING MALE-FEMALE			26
2	A110249-11	ADACO SEALING CEMENT 16oz			27
2	A110249-12	ADACO PACKING FIBER 16oz			28
4	A78250-6	CORD GRIP 19-22mm			29
2	1027159	XP BARRIER, 16PT, RELAY, 24VDC		3Y01, 3Y02	30

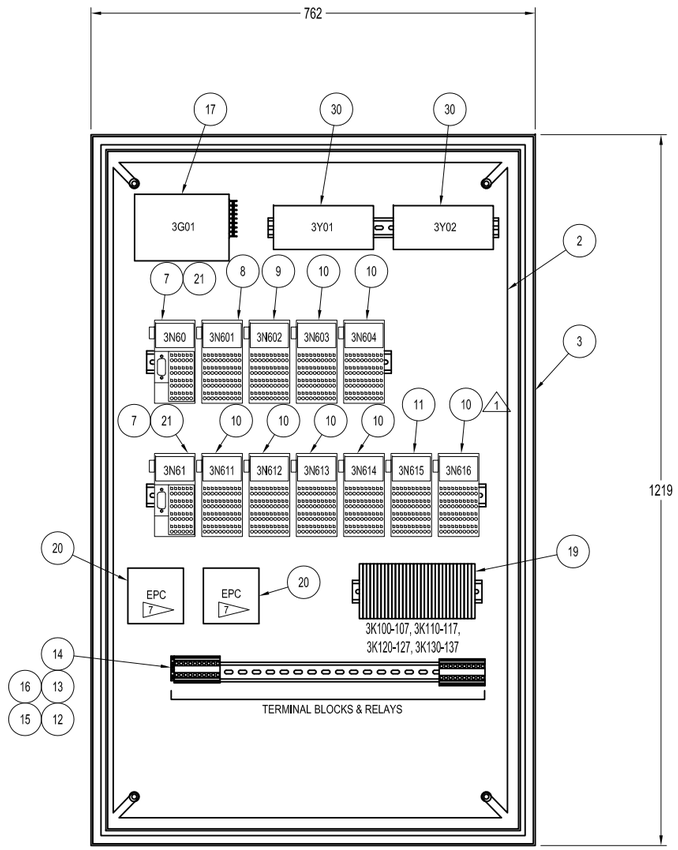

FRONT VIEW - DOOR NOT SHOWN

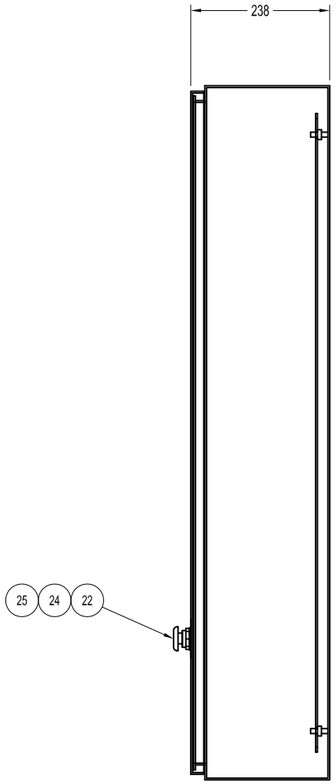

END VIEW

ISO VIEW - DOOR NOT SHOWN

REV	DESCRIPTION	REV'D BY / DATE	APPR'D BY / DATE
1	REMOVED ONE ANA OUTPUT MODULE AND REPLACED IT WITH ONE ANA INPUT MODULE.	PMB 5/9/2012	DH 5/9/2012

PROPRIETARY NOTICE:
The information disclosed hereon, in the sole property of The Robbins Company and is submitted in confidence. It shall not be duplicated in full or part, used by, or disclosed to any person, firm or corporation for any purpose except as The Robbins Company. By accepting this information, recipient agrees to return it upon request and to limit use of it to the purpose whatsoever to the conditions. This restriction is not a limitation of any rights granted by any contract.

MACHINE	NEXT ASSY
EPB2016-378/377	1046350

UNLESS NOTED ALL DIMS ARE mm

TOLERANCES UNLESS NOTED

FRACTIONS	DECIMALS	MACHINED SURFACES
0-500 ± 1/2	X ± 1.0	
500-1500 ± 3	X.X ± 0.5	
1500-6000 ± 6	X.XX ± .40	
6000+ ± 12	X.XXX ± .100	
	ANGLES ± 1	
	SURFACE	
	FINISH	

THIRD ANGLE PROJECTION

DIMENSIONS IN ARE REFERENCE

ALL GEOMETRIC DIMENSIONING & TOLERANCING PER ANSI Y14.5-2009

HYDRAULIC CABINET ASSEMBLY
CLASS 1 DIV 2

SIZE	DWG No.	REV	SHT	SCALE
D	1047710	1	1 OF 1	1:5 DO NOT SCALE

DRAWN BY	CHECKED STANDARDS
P.BRENNAN 5/1/2012	P.BRENNAN
	CHECKED DESIGN: D.HOBBS
WEIGHT TOTAL	APPROVED BY: D.HOBBS 5/1/2012

Robbins

www.TheRobbinsCompany.com

1047710

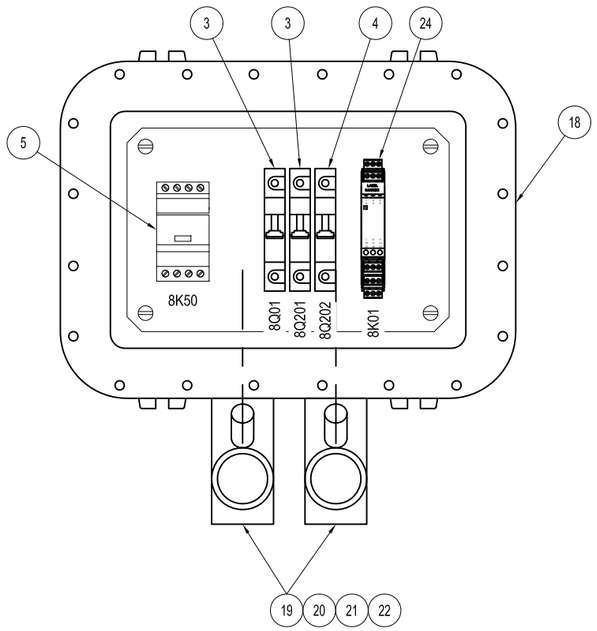

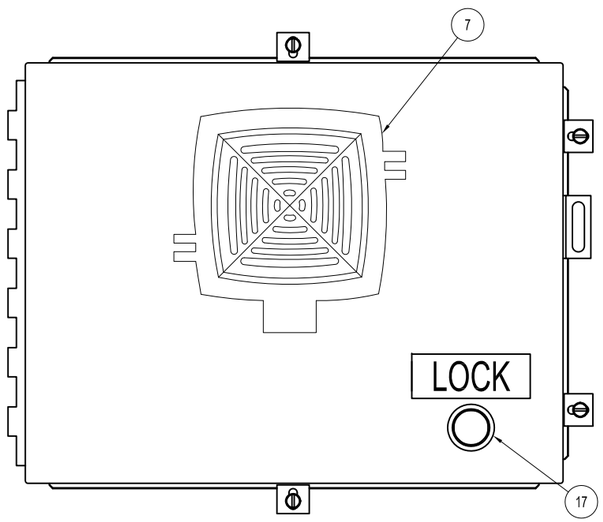

FRONT VIEW DOOR

NOTES:

1. ALL COMPONENTS SHALL BE IDENTIFIED BY LABELS.
2. ALL TERMINALS AND WIRING ABOVE 55 VOLTS SHALL BE PROTECTED AGAINST ELECTRIC SHOCK (DIRECT AND INDIRECT CONTACT), BY USE OF INSULATED BARRIERS AND SHIELDS.
3. CERTIFY AND MARK ASSEMBLY AS CE COMPLIANT.
4. I/0 REPEATER RADIO SYSTEM IS ORDERED ON SEPARATE DRAWING. MOUNT "UNIT B" RADIO EXTERNALLY.

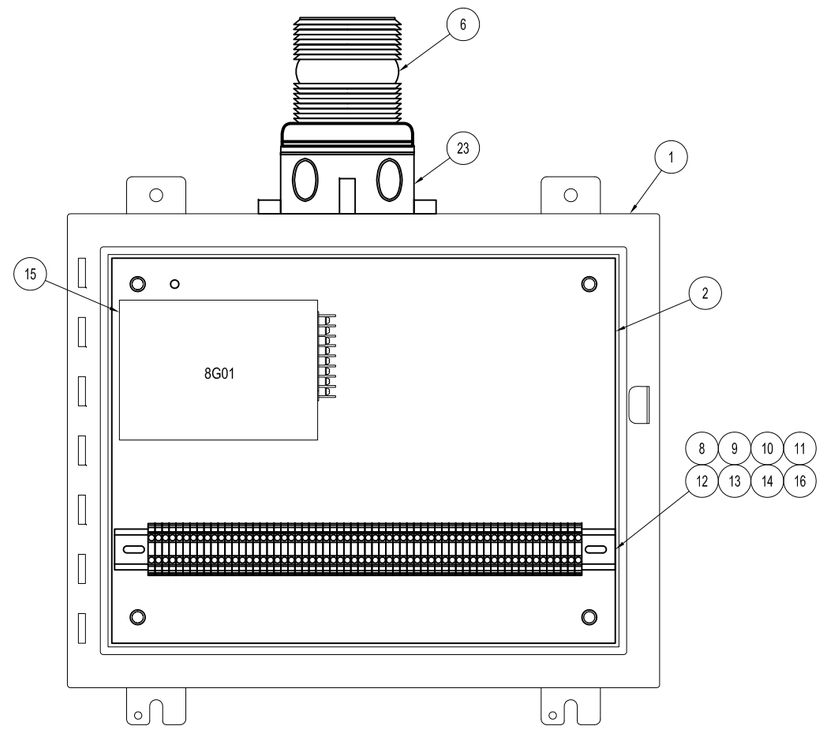

FRONT VIEW
DOOR REMOVED

QTY	PART No.	DESCRIPTION	DWG No.	Component/Vendor ID	ITEM
1	D71683-31	ENCLOSURE 16H x 20L x 6W			1
1	D71683-32	PANEL, 20 x 16			2
2	A98068-4	CIRCUIT BREAKER, 5A, 1 POLE		8Q01, 8Q201	3
1	A98068-7	CIRCUIT BREAKER, 15A, 1 POLE		8Q202	4
1	A104506-6	CONTACTOR, 3 POLE, 24VDC COIL		8K50	5
1	1049360-1	WARNING LIGHT, RED, 24VDC, CL1/DIV2			6
1	5750014188	WARNING HORN, XP, 24VDC			7
1	1029679	DINRAIL, 2 METER	1029720		8
1	1029680	WIRE DUCT, W/COVER, WHITE	1029720		9
1	1029682	MARKER, TB CARD, (100 CT)	1029720		10
8	1029677	END STOP, 36mm	1029720		11
4	1029675	END SECTION GREY	1029720		12
150	1029672	TERMINAL BLOCK, GREY	1029720		13
4	1029673	GROUND BLOCK	1029720		14
1	A78734-1	POWER SUPPLY, 24VDC, 20AMP		8G01	15
25	A98083-1	DIODE SUPPRESSOR			16
1	A90638-5	INDICATOR LIGHT, GREEN, 24VDC, CL1/DI2			17
1	A99569-1	EXPLOSION PROOF ENCLOSURE 8 x 12 x 4			18
2	A110249-3	XP SEAL OFF FITTING MALE - FEMALE, 1"			19
2	A110249-11	ADACO SEALING CEMENT 16 oz			20
2	A110249-12	ADACO PACKING FIBER 16 oz			21
4	A78250-6	CORD GRIP 19-22mm, 1"			22
1	1049360-5	OUTLET BOX			23
1	A75490-3	SWITCH ISOLATOR 1CH, FORMC RELAY, 120VAC		8K01	23

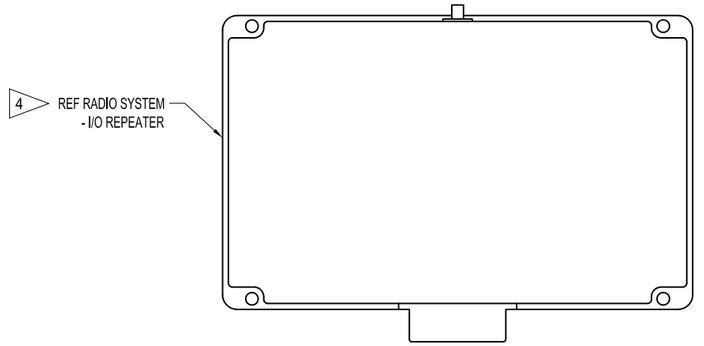

I/O REPEATER UNIT B (REF)
NTS

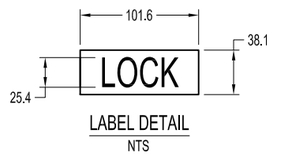

LABEL DETAIL
NTS

ERECTOR CABINET

PROPRIETARY NOTICE
The information disclosed hereon is the sole property of Robbins Company and is not to be used, copied, or disclosed to any person or entity without the written consent of Robbins Company. By accepting this information, recipient agrees to hold it in confidence and to use it solely for the purpose for which it is furnished. This restriction is in addition to any protection afforded by copyright law.

REV	DESCRIPTION	REV'D BY / DATE	APP'D BY / DATE

MACHINE: EPB2016-378/377 | NEXT ASSY:

UNLESS NOTED ALL DIMS ARE mm

TOLERANCES UNLESS NOTED

0-300	± 1.0	X	± 1.0
300-1500	± .3	X.X	± 1.0
1500-6000	± .6	X.XX	± .40
6000+	± 1.0	X.XXX	± .100
		ANGLES	± 1°
		SURFACE FINISH	63

DIMENSIONS IN ( ) ARE REFERENCE

ALL GEOMETRIC DIMENSIONING & TOLERANCING PER ANSI Y14.5-2009

TITLE: ERECTOR ELECTRICAL CABINET CLASS 1/ DIV 2

SIZE: D | DWG No.: 1049363 | REV: 0 | SHT 1 OF 3 | SCALE: 1:2.5 | DO NOT SCALE

DRAWN BY: P.BRENNAN | DATE: 5/17/2012 | CHECKED DESIGN: P.BRENNAN | CHECKED STANDARDS: D.HOBBS | WEIGHT TOTAL: | APPROVED BY: D.HOBBS | DATE: 5/17/2012

Robbins

www.TheRobbinsCompany.com

1049363

NOTES:

- ALL DEVICES TO BE LABELED ACCORDING TO THE SCHEMATICS.
- CONDUIT FOR THRU-DOOR VOLTAGE MONITOR TO BE MARKED "CAUTION 690V".
- INSURE COMMON CONNECTION FOR ALL GROUND WIRES TO CABINET GROUND AND EARTH GROUND.
- SET PROFI-BUS NODE ADDRESS ON EACH DRIVER CONTROL UNIT (RDCU). ADDRESS IS NOT SET THROUGH KEYPAD. (SEE TABLES BELOW)
- SHOP TO SUPPLY ALL LABELS AND LEGENDS.
- SHOP TO SUPPLY PLEXI-GLASS SHIELD OVER ANY UNPROTECTED AREA.
- 1 1 FIBER OPTIC CABLE, 30ft, IS USED TO INTERTIE MULTIPLE CABINETS. SHIP LOOSE INSIDE CABINET. FIELD INSTALL AS NECESSARY FOR MULTIPLE VFD CABINET LINEUPS. SEE SHEET 10.

2

QTY. -1	PART No.	DESCRIPTION	WT. EA. Kg	MATERIAL	ITEM
3	B118655-5	INVERTER, FAN UNIT KIT			44
3	B118655-27	KIT, MECH, R7i/R8i PLUG CONNECTORS + MECH			45
3	B118655-28	KIT MECH, R7i/R8i INVERTER FAN MOUNT			46
1	B118655-21	DSU, 380-690V, 1370kVA (115V,230V)			47
4	B118655-22	DSU CONTROL PANEL KIT + 3M CABLE			48
1	B118655-23	DSU, SOFTWARE, CONTROL PROGRAM			49
1	B118655-7	DSU MEASURING_IO KIT 0.5m OPTIC CABLE			50
1	B118655-9	DSU FAN UNIT KIT (FAN UNIT + CABLE) 230V, 50/60Hz			51
1	B118655-8	DSU CONTROL CABLE			52
1	B118655-29	KIT, MECH, DSU FAN MOUNT			53
1	B118655-24	DSU CHARGING KIT / 230V			54
1	B118655-11	DSU VOLTAGE TRANSDUCER KIT			55
6	B118655-18	FUSE DSU AC SUPPLY, 900A, 690V		404FU1,405,406 406,410,411	56
6	B118655-25	FUSE, INVERTER DC INPUT, 700A, 1250V		426FU1,2,3, 4,5,6,7,8,	57
4	B118655-26	FIBER OPTIC DOUBLE, 5M, 4 CONNECTORS.			58
2	B118655-31	KIT 205, MECH, R7i/R8i BUSBAR FUSE KIT FOR 2 MODULES			59
~~2~~	~~B118655-32~~	~~KIT 224, MECH, R7i/R8i SHROUD KIT~~			~~60~~
2	B118655-33	KIT 208, MECH, R7i/R8i TRAVERSE SUPPORT 600mm			61
1	B118655-34	KIT 15, MECH, DSU GUIDES 400mm			62
~~1~~	~~B118655-35~~	~~KIT 24, MECH, DSU SHROUT TOP AND BOTTOM 400mm~~			~~63~~
1	B118655-36	KIT 17, MECH, DSU AC BUS CONNECTION			64
2	A98079-6	HEATER, 200W, 230V, 50/60Hz W/THERMOSTAT		HTR1, 2	65
1	1028888	PUSHBUTTON, ESTOP, 30mm, 3NC/1NO			66
6	A99499-1	RELAY, 4 POLE, DUAL THROW, 24VDC, COIL & BASE		5K6,12,38,68,74,77	67
4	1030498	PROFIBUS, SUB-D, CONNECTOR			68
2	1033811	OUTLET, UNIVERSAL, 20A, 260V			69
~~1~~	~~A116065-3~~	~~WEATHERPROOF S.S. SINGLE GANG PLATE~~			~~70~~
1	A71935-8	BOX, WEATHERPROOF, FOR SINGLE GANG			71
1	A78734-1	POWER SUPPLY, 24VDC, 20A		PS1	72
1	A98068-9	CIRCUIT BREAKER, 20A, 1POLE		5Q66	73
2	A98069-7	CIRCUIT BREAKER, 15A, 2POLE		5Q27,59	74
1	A122350-24	LED CABLE CONNECTOR, END OF LINE			75
4	A122350-25	LED CABLE CONNECTOR, UNIT TO UNIT			76
1	1034760	SUPPORT FRAME FOR UNIVERSAL OUTLET			77
45ft	A99009-13	CABLE, 4/0 SINGLE COND			78
25ft	A99009-2	CABLE, #4 SINGLE COND			79
18ft	A99009-14	CABLE, #14 SINGLE COND			80
42ft	A99009-15	CABLE, #10 SINGLE COND			81
1	1045715-1	ACRYLIC SHEET, 48x96x0.177			82
7	1045716-2	ERIFLEX FLEXIBAR, 3MTC 3X32X1,3M			83
1	1045661-1	FIBER OPTIC CABLE, SINGLE PLASTIC, 30ft			84
3	A104467-1	ENCLOSURE, NEMA 4, 12"X10"X6"			85

QTY. -1	PART No.	DESCRIPTION	WT. EA. kg	MATERIAL	ITEM
-	D123245-1	VFD CABINET ASSEMBLY, EPB 3-DRIVE			1
1	A122350-1	SINGLE DOOR ENCLOSURE W/PANEL 2000X800X600			2
2	A122350-2	SINGLE DOOR ENCLOSURE W/OUT PANEL 2000X600X600			3
1	A122350-20	SINGLE DOOR ENCLOSURE W/O PANEL 2000 (H) X 400 (W) X 600 (D)			4
1	A122350-4	SINGLE DOOR ENCLOSURE W/PANEL 2000X600X600			5
1	A122350-5	SIDEWALL 2000X600			6
1	A122350-6	DIVIDER PANEL 2000X502			7
1	A122350-7	FRONT & REAR PLINTH 100X800			8
3	A122350-8	FRONT & REAR PLINTH 100X600			9
1 1	A122350-9	FRONT & REAR PLINTH 100X400			10
3 1	4	A122350-10	SIDE PLINTH 100X569		11
1	A122350-11	VERTICAL BAYING ATTACHMENT			12
4	A122350-12	CORNER BAYING BRACKET			13
4	A122350-13	FLAT BAYING BRACKET			14
1 1	A122350-14	EYEBOLT INTERCONNECTION BRACKET			15
5	A122350-15	DELUXE HANDLE			16
1 ~~5~~	~~A122350-16~~	~~PUSHBUTTON INSERT, DELUXE HANDLE~~			~~17~~
4	A122350-17	DOOR SWITCH KIT			18
1	A122350-18	20 L.E.D. LIGHT SYSTEM, 24VDC			19
4	A122350-19	30 L.E.D. LIGHT SYSTEM, 24VDC			20
1pk	A122350-21	PLINTH BAYING BRACKETS 20/pk			21
6pk	A122350-22	TS BAYING QUICK WEDGE 6/pk			22
4	A122350-23	TOP BAYING COVER			23
2	A122381-1	BUSBAR, 525mm, 3200A			24
2	A122381-3	BUSBAR, 925mm, 3200A			25
2	A122409-1	CONNECTOR BUSBAR			26
1 8	A122380-1	SUPPORT BUSBAR, 3200A MAXI-PLS			27
1 2	A122383-2	CLAMP, CONNECTOR 20X63mm BAR			28
3	A122384-1	TERMINAL STUD, M12			29
2	A122410-1	SNAP NUT			30
1	B122310-1	DISCONNECT SWITCH ASSEMBLY, 1200A, 690V			31
2	A122292-1	CONTACTOR, 690V, 3P, NON-REVERSING		5K54,56	32
2	A122292-2	TERMINAL LUG KIT		5K54,56	33
1	A121470-1	RELAY, VOLTAGE MONITOR		OVR1	34
2	A122291-1	THRU DOOR VOLTAGE INDICATOR (FLUSH MOUNT)			35
2	A122291-2	6ft #10 NTW CONDUIT			36
1 ~~2~~	~~A122291-3~~	~~30mm TO 1 1/4: R 3W CONDUIT/ADAPTER~~			~~37~~
3	B118655-19	INVERTER, 315kW, 690V,347A/+du/dt			38
4	B118655-2	INVERTER/DSU, DRIVE CONTROL UNIT + CABLES			39
3	B118655-20	INVERTER, SOFTWARE, STANDARD APPL (+N664)			40
3	B118655-3	INVERTER, DDCS COMMUNICATION BOARD 3			41
1 ~~1~~	~~A70301-1~~	~~LIGHT SWITCH, ASSY, 1P~~			~~42~~
4	B118655-4	INVERTER, PROFIBUS DP ADAPTER			43

SHT	REV
10	1
9	0
8	0
7	0
6	0
5	0
4	0
3	2
2	1
1	3

REV	DESCRIPTION	BY/DATE
3	UPDATED REVISION STATUS CHG'D QTY ITEM 69 WAS 1	DBS 23MAR12
2	CHG'D QTY ITEM 69 WAS 1 DELETED DAB MODE ADDRESS LABEL	DBS 3FEB12
1	UPDATED PER ECO 4108 DELETED ITEMS 17,37,42&63, CHGS QTYS, ADDED ITEMS 78-85 ADDED FLAGE NOTE 1 REV SHT 2&3	DBS 28OCT11

PROPRIETARY NOTICE
The information disclosed herein, is the sole property of The Robbins Company, and is not to be published, or shall not be duplicated in full or part, used by, or disclosed to others for any purpose without the written consent of The Robbins Company. By accepting this information, recipient agrees to place it under the strictest confidence, and to use it only for the purpose for which it was intended. This material is on loan only, and is to be returned upon request by The Robbins Company.

TOLERANCES UNLESS NOTED
FRAC (mm) 0-300 ±1.5; 300-1500 ±5; 1500-6000 ±6; 6000+ ±12
FLAME CUT 303/CLASS
WELDING 303/CLASS
MACHINING (mm) x ±1.5; x.x ±1.0; x.xx ±.40; x.xxx ±.100; ANGLES ±1°
SURFACE FINISH 32
BRAZING 303/CLASS

MACHINE | NEXT ASSY
UNLESS NOTED, ALL DIM'S ARE mm
DO NOT SCALE
THIRD ANGLE PROJECTION
ALL GEOMETRIC DIMENSIONING AND TOLERANCING PER ISO R1101 - 1983
DIMS (in) ARE REF
SCALE 1:1

TITLE: VFD CABINET ASSEMBLY EPB, 3-DRIVE
SIZE D | DWG No D123245 | REV 3 | SHT 1 OF 10 | ORION Spec Rel Pkg's
DRAWN DSAMPTER DATE 19OCT11 | CHECKED BJDONOVAN DATE 19OCT11

Robbins
THE ROBBINS COMPANY
29100 Hall Street
Solon, Ohio 44139 USA
Phone: (440) 248-3303
Fax: (440) 248-1702
Kent, WA: Phone (253) 872-0500 Fax: (253) 872-0199
Oak Hill, WV: Phone (304) 465-5880 Fax: (304) 465-5886

D123245

SPARE PART			
TCR NUMBER	DESCRIPTION	VENDER	VENDER PART NUMBER
SP00490	CIRCUIT BREAKER, DP, 70A	CUTLER HAMMER	BAB2070
SP00492	CIRCUIT BREAKER, 15A/30mA GF	CUTLER HAMMER	QBGFEP1015

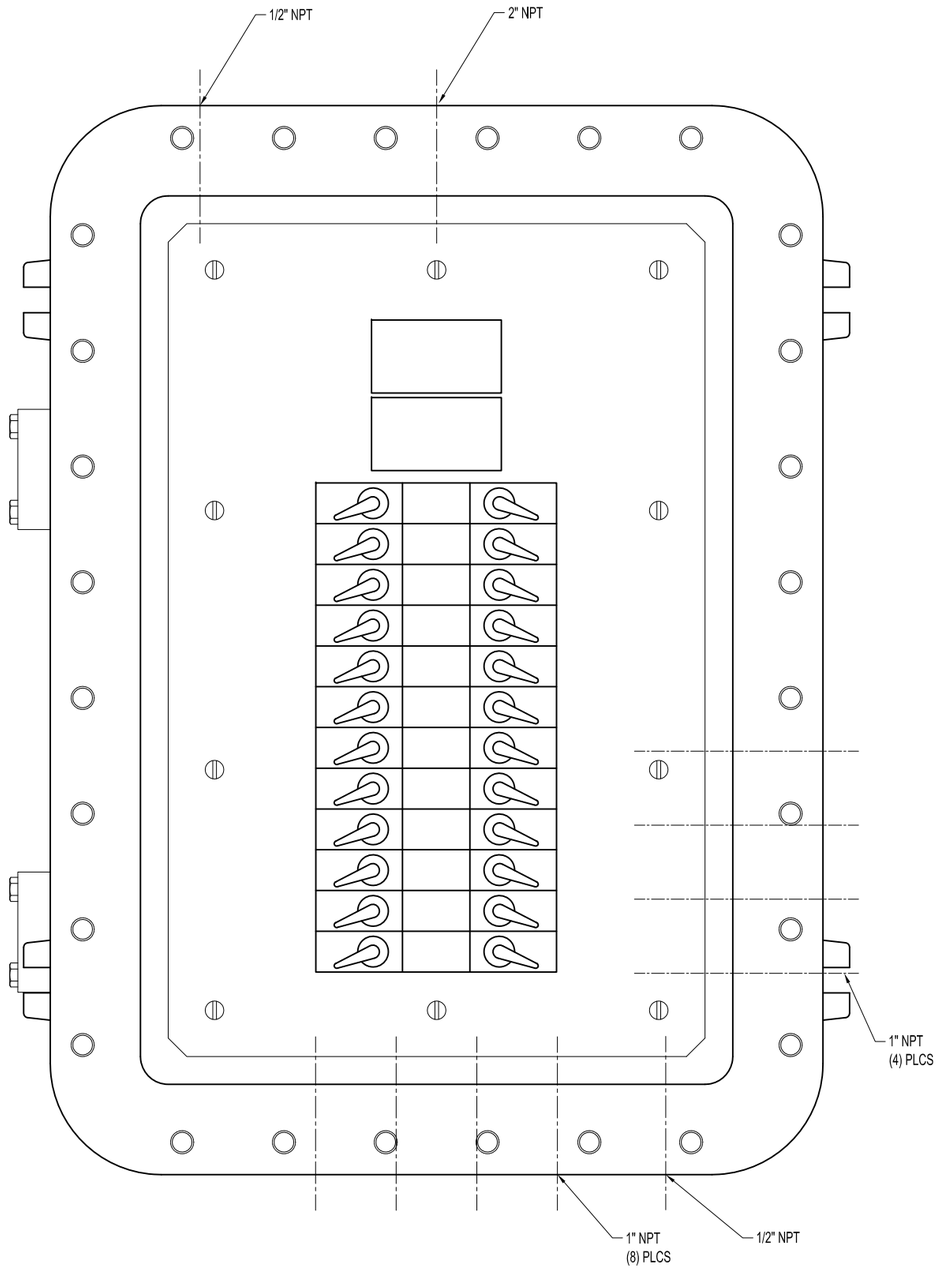

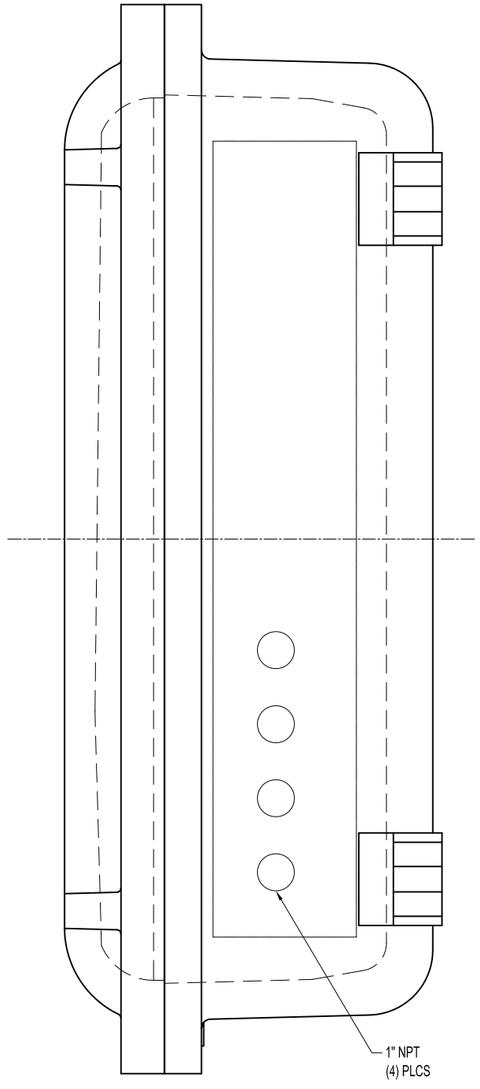

DESCRIPTION

EXPLOSION PROOF LOAD PANEL ASSY 16"W x 24"H X 6"D

SPECIFICATIONS

- 1 PHASE, 3-WIRE, SOLID NEUTRAL BACK-FED MAIN PANELBOARD 120V-230V 24 CIRCUITS WITH: (1) 2 POLE 70A MAIN BREAKER AND (12) 1 POLE 15A GFI 30mA BREAKERS. (ALL BREAKERS TO HAVE OPERATOR HANDLES).
- CONDUIT OPENINGS (NPT): (1) 2" TOP, (1) $\frac{1}{2}$" TOP, (4) 1" SIDE, (1) $\frac{1}{2}$" BOTTOM AND (8) 1" BOTTOM.
- PROVIDE PLUGS FOR ALL TAPPED HOLES.
- INSTALL 1/2" BREATHER ON TOP, 1/2" DRAIN ON BOTTOM.
- FACTORY INSTALL HINGES ON LH SIDE.
- SUPPLY APPROVAL DRAWING TO ROBBINS BEFORE MANUFACTURING

MANUFACTURER PART NUMBER

XPB1-241B1, MODIFIED AS DESCRIBED ABOVE

MANUFACTURER

ADALET OR EQUAL
WWW.ADALET.COM

SUPPLIER

PEPCO

PROPRIETARY NOTICE
This information disclosed hereon is the sole property of The Robbins Company and is considered proprietary. It shall not be duplicated in full or part, used by or disclosed to any other person or entity without the written consent of The Robbins Company. By accepting this information, recipient agrees to keep it confidential and to use it solely for the purpose for which it was disclosed to the recipient. This material is on loan only, and upon request must be returned to The Robbins Company.

MACHINE	NEXT ASSY
EPB2016-377/378	1046350

UNLESS NOTED ALL DIMS ARE mm
TOLERANCES UNLESS NOTED

0-300	± 1.0	X	± 1.5
300-1500	± 3	XX	± 1.0
1500-6000	± 6	X.XX	± .40
6000+	± 12	X.XXX	± .100
		ANGLES	± 1°
		SURFACE	63
THIRD ANGLE PROJECTION		BREAK	.005

DIMENSIONS (X) ARE REFERENCE
ALL GEOMETRIC DIMENSIONING & TOLERANCING PER ANSI Y14.5-2009

REV	DESCRIPTION	REV'D BY / DATE	APP'D BY / DATE

TITLE: LOAD PANEL (XP), GFI 70A MAIN, 1PHASE, 24CKT

SIZE	DWG No.	REV	SHT	SCALE
D	1049961	0	1 OF 1	1:2

DO NOT SCALE

DRAWN BY: P.BRENNAN
DATE: 6/14/2012
CHECKED DESIGN: D.HOBBS
WEIGHT TOTAL:
APPROVED BY: D.HOBBS
DATE: 6/14/2012

Robbins
www.TheRobbinsCompany.com

1049961

QTY. -1	PART No.	DESCRIPTION	WT. EA. kg	MATERIAL	ITEM

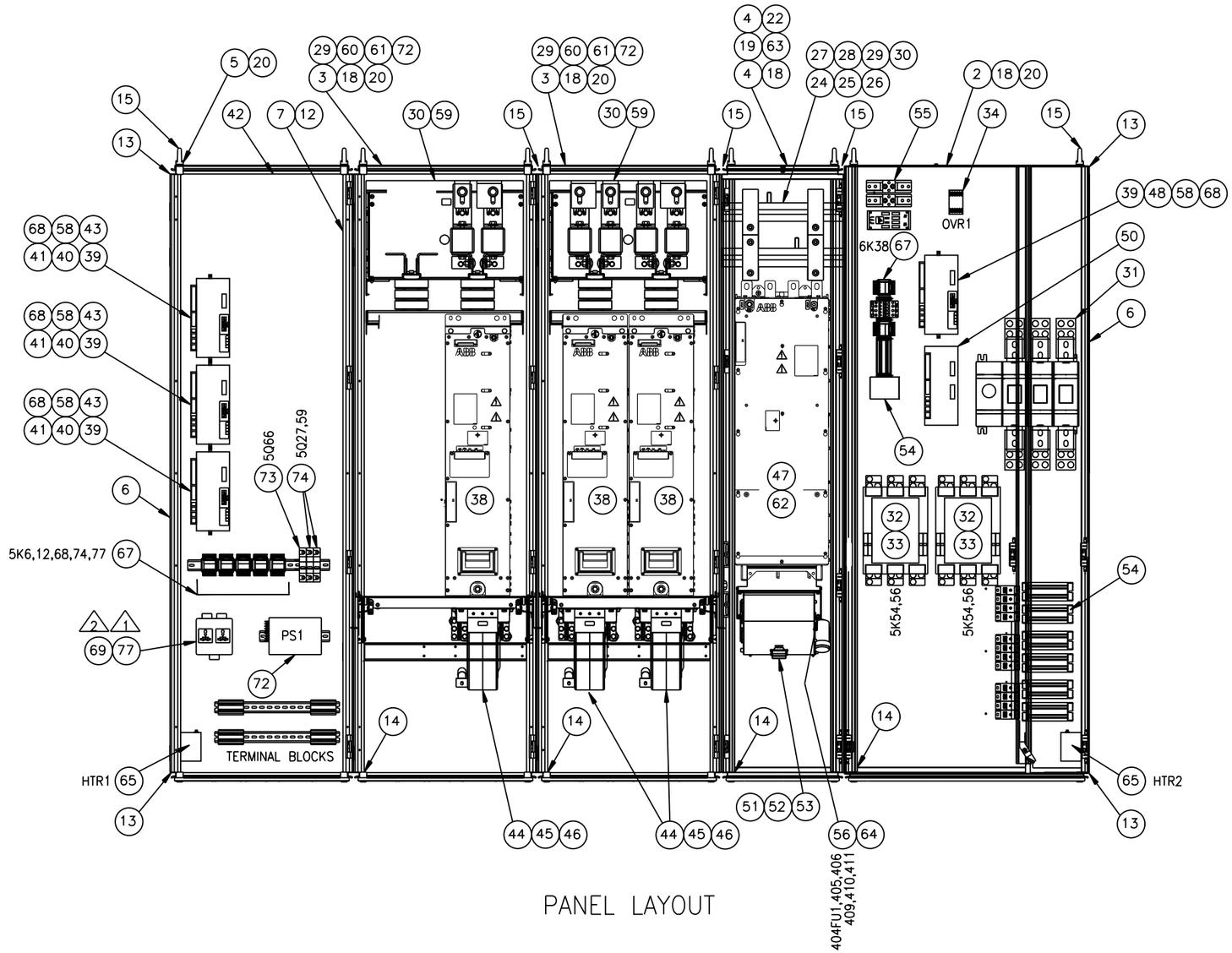

PANEL LAYOUT

REV	DESCRIPTION	ZONE	BY / DATE
2	DWG CHANGE, ADDED SECOND OUTLET		DBS 190CT11
1	CHANGED ITEM CALL OUT TO 10 17		DBS 200CT11

PROPRIETARY NOTICE
The information disclosed herein, is the sole property of The Robbins Company, and is considered proprietary. It shall not be duplicated in full or part, used by or disclosed outside the recipient's organization without the consent of the Robbins Company. By accepting this information, the recipient agrees to abide by this notice. Unauthorized use, duplication or disclosure may be subject to civil and criminal penalties. This material is on loan only, and is to be returned upon request by The Robbins Company.

TOLERANCES UNLESS NOTED	
FAB (mm) 0–300	±1.5
300–1500	±3
1500–6000	±6
6000+	±12
FLAME CUT SRD/CLASS	
WELDING SRD/CLASS	
MACHINING (mm) x	±1.5
x.x	±1.0
x.xx	±.40
x.xxx	±.100
ANGLES	±1 °
SURFACE FINISH	32
BEARING SRD/CLASS	

MACHINE	NEXT ASSY
UNLESS NOTED, ALL DIM'S ARE mm	
DO NOT SCALE	
THIRD ANGLE PROJECTION	
ALL GEOMETRIC DIMENSIONING AND TOLERANCING PER ISO R1101 – 1983 DIMS (X) ARE REF	SCALE 1:1

TITLE
VFD CABINET ASSEMBLY EPB, 3–DRIVE

SIZE	DWG No	REV	SHT	ORIGIN
D	D123245	2	3 OF 10	

Phone: (440) 248-3303
Fax: (440) 248-1702
THE ROBBINS COMPANY
29100 Hall Street
Solon, Ohio 44139 USA
Kent, WA:
Phone (253) 872-0500
Fax: (253) 872-0199
Oak Hill, WV:
Phone (304) 465-5880
Fax: (304) 465-5886

ORIGIN	CHECKED
D.SUMPTER 190CT11	B.DONNOVAN 190CT11

D123245

SPARE PART			
TCR NUMBER	DESCRIPTION	VENDER	VENDER PART NUMBER
SP00490	CIRCUIT BREAKER, DP, 70A	CUTLER HAMMER	BAB2070
SP00542	CIRCUIT BREAKER, DP, 15A	CUTLER HAMMER	BAB2015
SP00487	CIRCUIT BREAKER, SP, 15A	CUTLER HAMMER	BAB1015
SP00492	CIRCUIT BREAKER, 15A/30mA GF	CUTLER HAMMER	QBGFEP1015

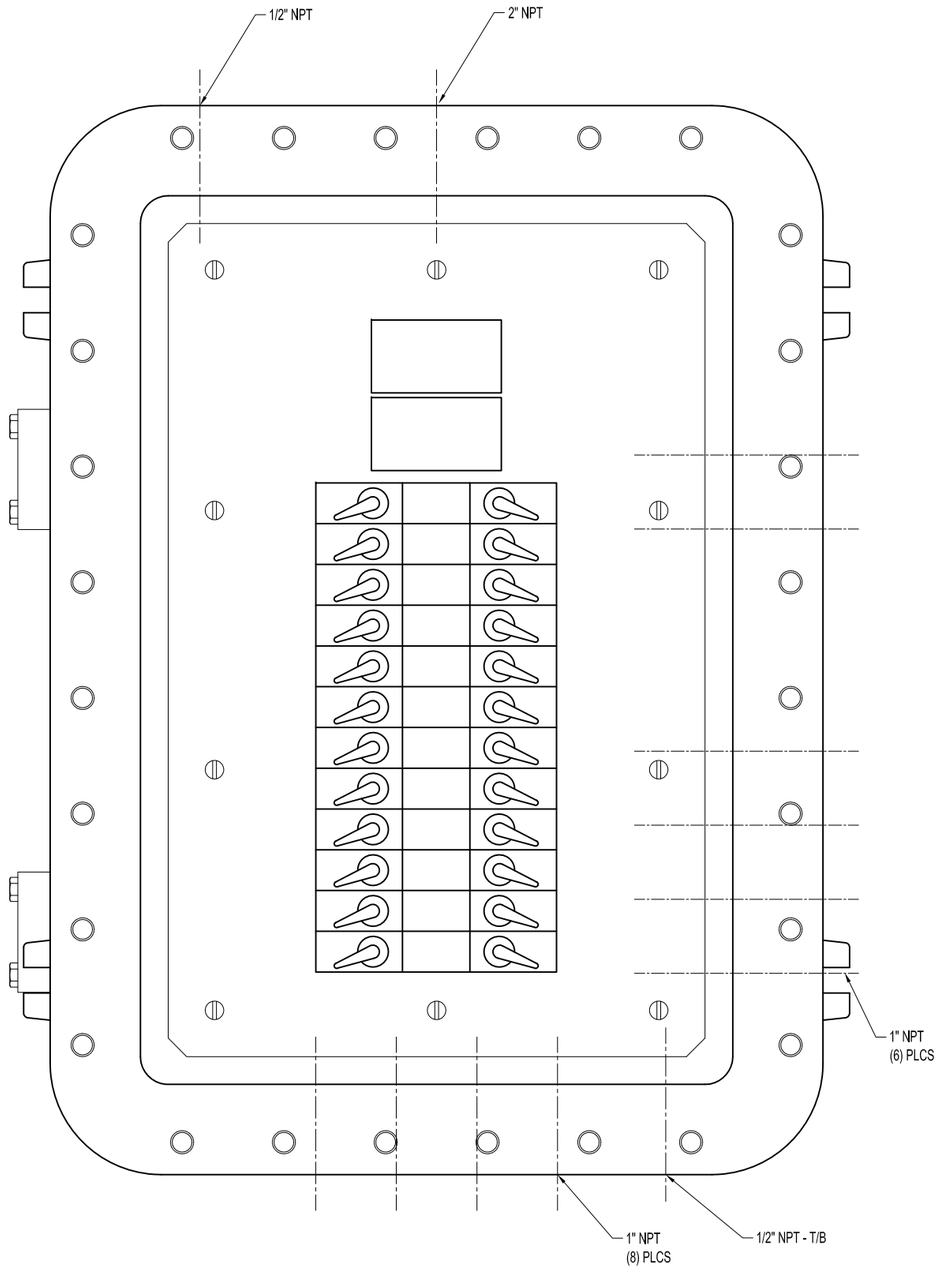

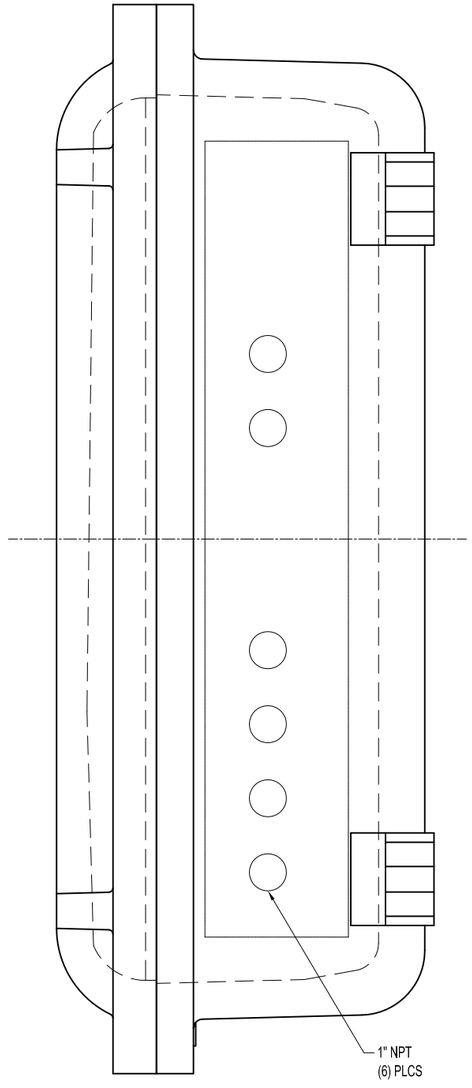

DESCRIPTION

EXPLOSION PROOF LOAD PANEL ASSY 16"W x 24"H X 6"D

SPECIFICATIONS

- 1 PHASE, 3-WIRE, SOLID NEUTRAL BACK-FED MAIN PANELBOARD 120V-230V
  24 CIRCUITS WITH: (1) 2 POLE 70A MAIN BREAKER, (4) 2 POLE 15A BREAKERS
  (4) 1 POLE 15A BREAKER AND (6) 1 POLE 15A GFI 30mA BREAKERS.
  (ALL BREAKERS TO HAVE OPERATOR HANDLES).

- CONDUIT OPENINGS (NPT): (1) 2" TOP, (1) $\frac{1}{2}$" TOP, (6) 1" SIDE, (1) $\frac{1}{2}$" BOTTOM
  AND (8) 1" BOTTOM.

- PROVIDE PLUGS FOR ALL TAPPED HOLES.

- INSTALL 1/2" BREATHER ON TOP, 1/2" DRAIN ON BOTTOM.

- FACTORY INSTALL HINGES ON LH SIDE.

- SUPPLY APPROVAL DRAWING TO ROBBINS BEFORE MANUFACTURING

MANUFACTURER PART NUMBER

XPB1-241B1, MODIFIED AS DESCRIBED ABOVE

MANUFACTURER

ADALET OR EQUAL
WWW.ADALET.COM

SUPPLIER

PEPCO

PROPRIETARY NOTICE
This information disclosed hereon is the sole property of The Robbins Company and is not to be published in whole or part, used by, or disclosed to any other person or corporation without the written permission of The Robbins Company. By accepting this information, recipient agrees to use the information for manufacturing purposes only and to return it whenever so requested by The Robbins Company. This material is on loan only, and shall be returned upon demand. Unauthorized use of this data is illegal. (ASME Y14.34M-1996)

MACHINE	NEXT ASSY
EPB2016-377/378	1046350

UNLESS NOTED ALL DIMS ARE mm
TOLERANCES UNLESS NOTED

0-500	± 1.5	X	± 1.5
500-1500	± 3	X.X	± 1.5
1500-6000	± 6	X.XX	± .40
6000+	± 12	X.XXX	± .100
		ANGLES	± 1°
		SURFACE FINISH	63

THIRD ANGLE PROJECTION
DIMENSIONS (XX) ARE REFERENCE
ALL GEOMETRIC DIMENSIONING & TOLERANCING PER ANSI Y14.5-2009

REV	DESCRIPTION	REV'D BY/ DATE	APP'D BY/ DATE

TITLE: LOAD PANEL (XP), 70A MAIN, 1PHASE, 24CKT

SIZE	DWG No.	REV	SHT	SCALE
D	1049945	0	1 OF 1	1:2

DO NOT SCALE

DRAWN BY	CHECKED STANDARDS
P.BRENNAN	P.BRENNAN
DATE: 6/14/2012	CHECKED DESIGN: D.HOBBS
WEIGHT TOTAL:	APPROVED BY: D.HOBBS
	DATE: 6/14/2012

Robbins

www.TheRobbinsCompany.com

1049945

60-01 60-02 60-03 60-04 60-05 60-06 60-07 60-08 60-09 60-10 60-11 60-12 60-13 60-14 60-15 60-16 60-17 60-18 60-19 60-20 60-21 60-22 60-23 60-24 60-25 60-26 60-27 60-28 60-29 60-30 60-31 60-32 60-33 60-34 60-35 60-36 60-37 60-38 60-39 60-40 60-41 60-42 60-43 60-44 60-45

60-46 60-47 60-48 60-49 60-50 60-51 60-52 60-53 60-54 60-55 60-56 60-57 60-58 60-59 60-60 60-61 60-62 60-63 60-64 60-65 60-66 60-67 60-68 60-69 60-70 60-71 60-72 60-73 60-74 60-75 60-76 60-77 60-78 60-79 60-80 60-81 60-82 60-83 60-84 60-85 60-86 60-87 60-88 60-89 60-90

ERECTOR CABLE REEL

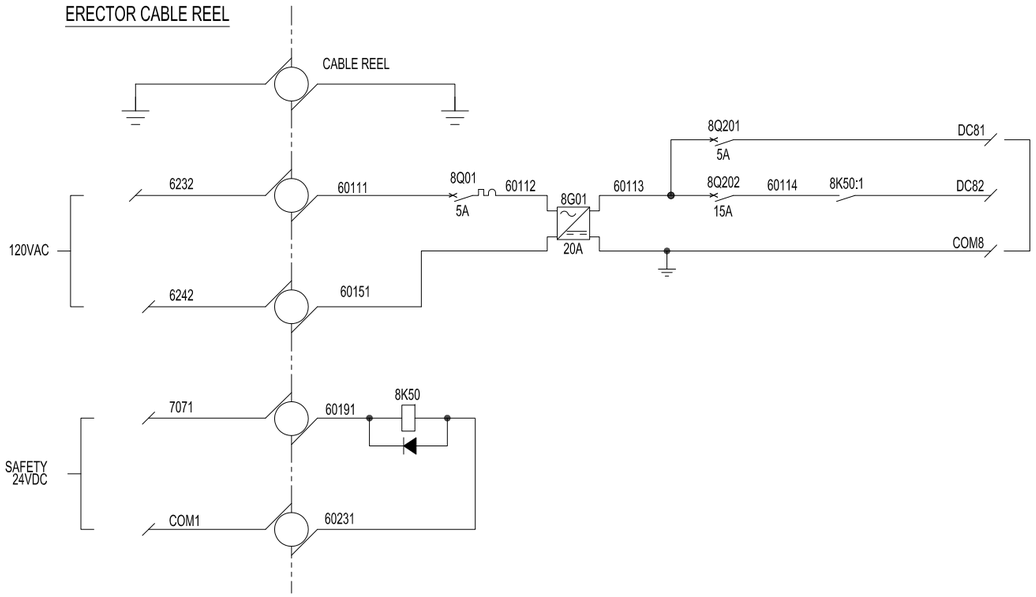

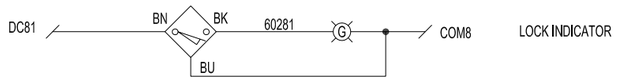

LOCK INDICATOR

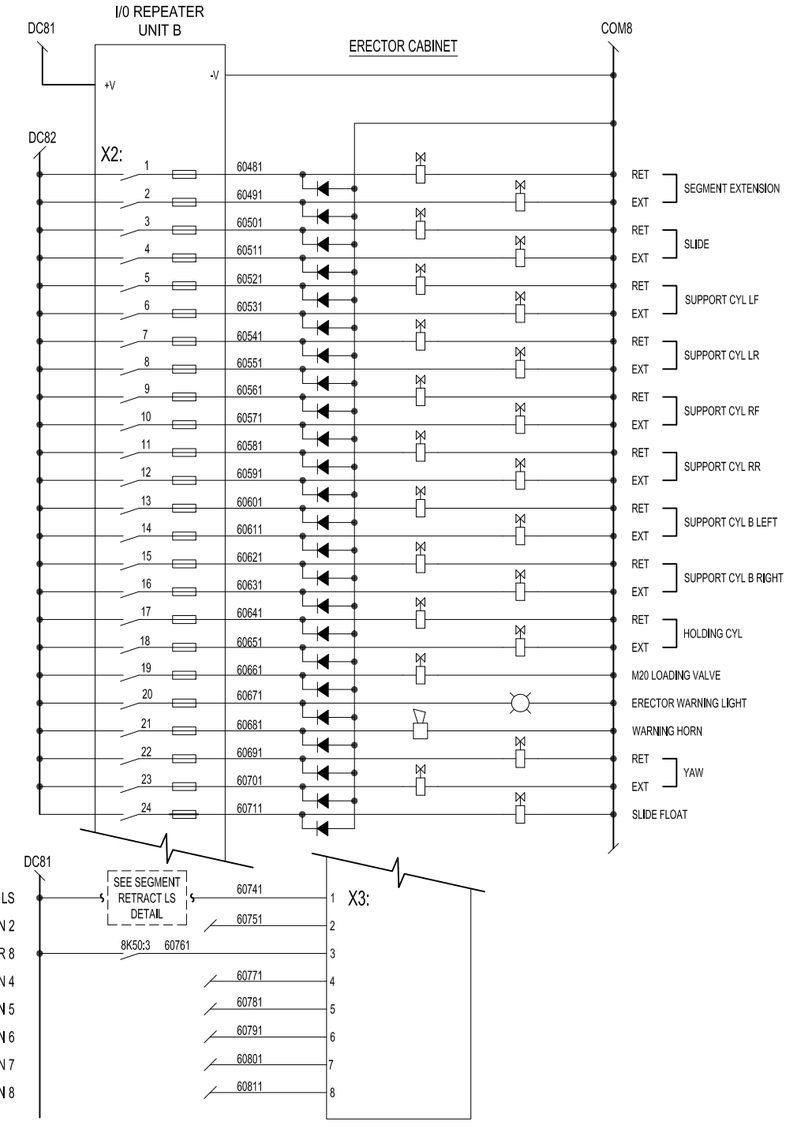

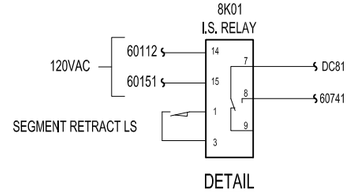

DETAIL
SEGMENT RETRACT LS

REV	DESCRIPTION	REVD BY / DATE	APPD BY / DATE

TITLE: ERECTOR ELECTRICAL CABINET CLASS 1/ DIV 2

SIZE	DRWG No.	REV	SHT	OF	SCALE
D	1049363	0	2	3	1:1

DO NOT SCALE

MACHINE	NEXT ASSY
EPB2016-378/377	

UNLESS NOTED ALL DIMS ARE mm
TOLERANCES UNLESS NOTED
0-300 ± 1.0 | 300-1500 ± 3 | 1500-6000 ± 6 | 6000+ ± 10
FRACTIONS ± 1/64 | DECIMALS .xx ± 1.0 | .x ± 1.5 | .XX ± .5 | .XXX ± .25 | ANGLES ± 1 | SURFACE 63
THIRD ANGLE PROJECTION
DIMENSIONS ARE REFERENCE
ALL GEOMETRIC DIMENSIONING & TOLERANCING PER ANSI Y14.5-2009

DRAWN BY: P.BRENNAN 5/17/2012
CHECKED STANDARDS: P.BRENNAN
CHECKED DESIGN: D.HOBBS
APPROVED BY: D.HOBBS 5/17/2012
WEIGHT TOTAL:

PROPRIETARY NOTICE
The information disclosed hereon is the sole property of Robbins & Myers Energy Systems L.P. and shall not be duplicated in full or part, used by, or disclosed to any Company or person for any purpose without the written consent of the Company. By accepting this information, recipient agrees to return it upon request and to limit its use and disclosure to the conditions. This material is to be held in confidence by recipient and its employees and agents.

Robbins

www.TheRobbinsCompany.com

1049363

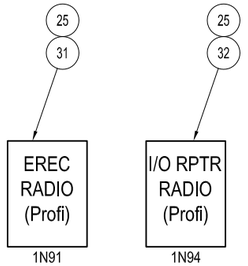

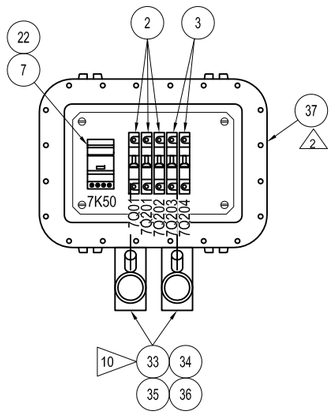

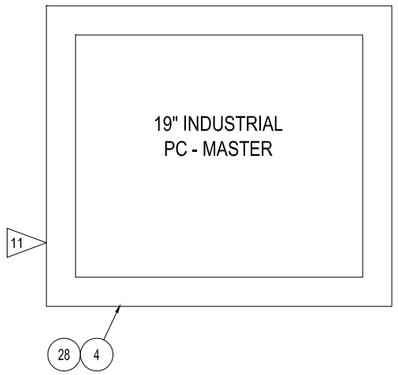

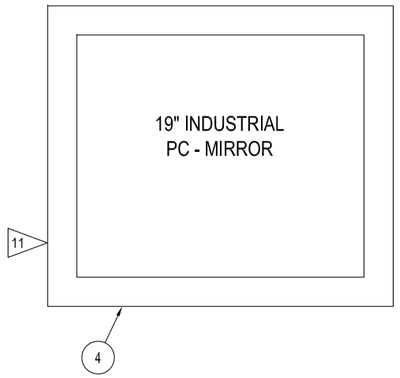

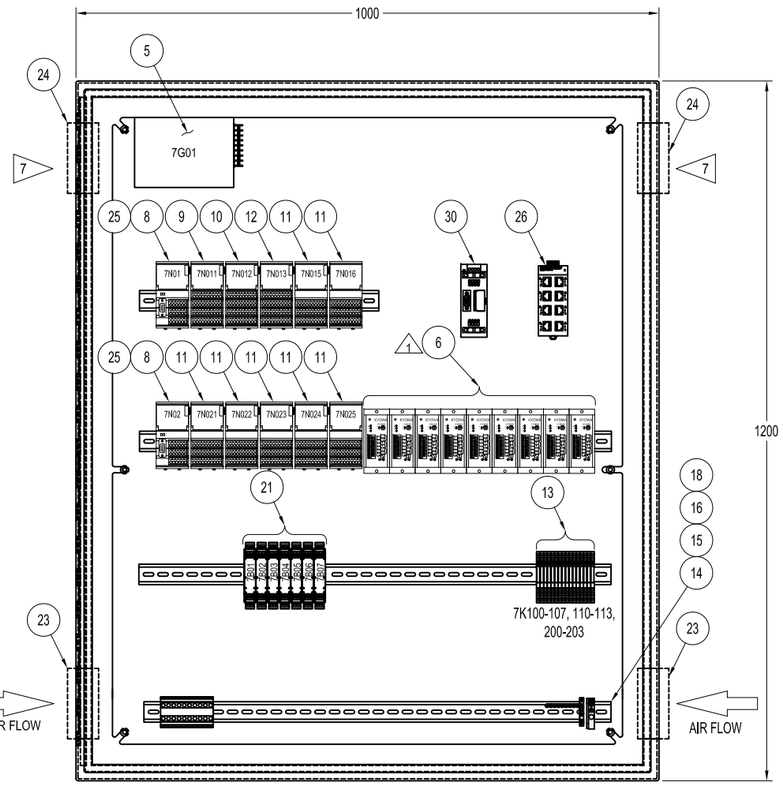

FRONT VIEW - DOOR NOT SHOWN

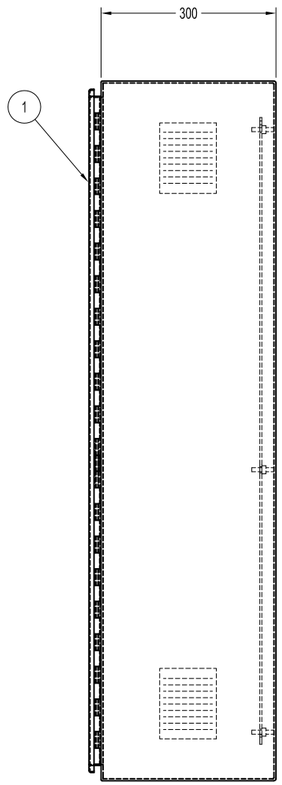

SIDE VIEW - DOOR NOT SHOWN

NOTES:

1. WIRE PER MACHINE SCHEMATIC .
2. REFER TO PLC INSTALLATION DRAWING.
3. ALL COMPONENTS SHALL BE IDENTIFIED BY LABELS.
4. ALL TERMINALS AND WIRING ABOVE 55 VOLTS SHALL BE PROTECTED AGAINST ELECTRICAL SHOCK (DIRECT AND INDIRECT CONTACT), BY USE OF INSULATED BARRIERS AND SHIELDS.
5. CERTIFY AND MARK ASSEMBLY AS CE COMPLIANT.
6. PHYSICAL LAYOUT IS GENERAL ONLY. CABINET BUILDER CAN RE-ARRANGE COMPONENT LAYOUT AS REQUIRED.
7. MOUNT EXHAUST LOUVER AS HIGH AS PRACTICAL.
8. SHIP LOOSE INSIDE CABINET.
9. MOUNTED EXTERNALLY.
10. USE #12 AWG 6 CONDUCTORS SOW FLEXIBLE CABLE OR EQUAL.
11. MOUNT IN OPERATOR CONSOLE - SEE OPERATOR CONSOLE ASSY DWG 1036171.

QTY	PART No.	DESCRIPTION	DWG No.	Component/Vendor ID	ITEM
1	D117567-1	ENCLOSURE, 1200X1000X300 2 DOOR			1
3	A98068-4	CIRCUIT BREAKER, 5A, 1 POLE		7Q01, 201, 202	2
2	A98068-7	CIRCUIT BREAKER, 15A 1 POLE		7Q203, 204	3
3	A118219-1	COMPUTER, 19", PANEL MOUNT, CL1 DIV2			4
1	A78734-1	POWER SUPPLY, 24VDC, 20 AMP		7G01	5
1 △1	9 B420291-1	AMPLIFIER, EARTH PRESSURE SENSOR			6
1	A104506-6	CONTACTOR, 4 POL 32A 24VDC		7K50	7
2	2 A116347-3	CUBE20 BUSNODE, PROFIBUS		7N01, 02	8
2	1 A116347-1	CUBE20 DIG IN MODULE, 32 PT, PROFIBUS		7N011	9
2	1 A116347-2	CUBE20 DIG OUT MODULE, 32 PT, PROFIBUS		7N012	10
2	7 A116347-4	CUBE20 ANA IN MODULE, 4CH, PROFIBUS		7N015-016, 7N021-025	11
2	1 A116347-7	CUBE20 DIG I/O MODULE 16IN/160UT		7N013	12
16	1035271	RELAY, TB 1 PDT, 24VDC, 5A CL1/DIV2		7K100-107, 110-113 7K200-203	13
6	1029675	END SECTION GREY	1029720		14
6	1029677	END STOP, 36MM	1029720		15
300	1029672	TERMINAQL BLOCK, GREY	1029720		16
3	1029679	DINRAIL, 2 METER	1029720		17
19	1029676	JUMPER, 10 POLE	1029720		18
2	1029680	WIRE DUCT, W/COVER, WHITE	1029720		19
4	1029682	MARKER, TB CARD, (100CT)	1029720		20
7	A101396-1	POT CONVERTER, 4-20MA		7B01-07	21
1	A98083-1	DIODE SUPPRESSOR		7K50	22
2	1048327-3	COOLING FAN, 6" 120V, XP			23
2	A98079-16	EXHAUST LOUVER, 6"			24
4	1030498	PROFIBUS CONNECTOR, 90DEG		7N01, 02, 1N91, 94	25
1	A82127-2	ROUTER, 8 PORT			26
2 6	A97179-5	ETHERNET CABLE, 10FT			27
1	A104136-7	SOFTWARE, LOGIC PC/VIEW RT HK			28
8 2	1047594	KEYBOARD, W/INTEGRATED MOUSE, CLASS 1 / DIV 2			29
2 1	A117802-1	PROFIBUS REPEATER, SIEMENS			30
9 REF	1046535	RECEIVER, ERECTOR RADIO CONTROL, PROFIBUS		1N91	31
9 REF	D120949-2	I/O REPEATER RADIO RECEIVER, PROFIBUS		1N94	32
3	A110249-3	XP SEAL OFF FITTING MALE-FEMALE, 1"			33
3	A110249-11	ADACO SEALING CEMENT 16oz			34
3	A110249-12	ADACO PACKING FIBER 16oz			35
6	A78250-6	CORD GRIP 19-22mm, 1"			36
1 △2	A99569-1	XP, ENCLOSURE 8H x 12L x 4D			37

REV	DESCRIPTION	REVD BY/ DATE	APPD BY/ DATE
2	ADDED ITEM 37 TO BOM	PMB 5/18/2012	DH 5/18/2012
1	ADDED ONE EARTH PRESSURE SENSOR AMPLIFIER	PMB 5/9/2012	DH 5/9/2012

PROPRIETARY NOTICE
The information disclosed hereon is the sole property of Robbins Company and is considered confidential. It shall not be reproduced in full or part, used by or disclosed to any Company, person or entity without the written consent of Robbins Company. By accepting this information, recipient agrees to use it only for the purpose for which it is intended and to return it upon request. Robbins Company reserves its rights to the fullest extent of the law.

MACHINE	NEXT ASSY
EPB2016-367/377	1046350

UNLESS NOTED ALL DIMS ARE mm
TOLERANCES UNLESS NOTED

0-300	± 1.5	X	± 1.5
300-1500	± 3	X.X	± .14
1500-6000	± 6	X.XX	± .40
6000+	± 12	X.XXX	± .100

MATERIAL: 304 SS
FINISH: #4 SATIN
HARDNESS: HRC 65
SURFACE FINISH: 125µin

DIMENSIONS (X) ARE REFERENCE
ALL GEOMETRIC DIMENSIONING & TOLERANCING PER ANSI Y14.5-2009

OPERATOR CABINET AND PC CLASS 1 / DIV 2

SIZE	DWG No.	REV	SHT	SCALE
D	1048326	2	1 OF 1	1:5

DO NOT SCALE

DRAWN BY	CHECKED BY MECHANICAL	CHECKED BY ELECTRICAL	APPROVED BY
P.BRENNAN	P.BRENNAN	P.BRENNAN	D.HOBBS
DATE 4/27/2012			DATE 4/27/2012

WEIGHT TOTAL

Robbins

www.TheRobbinsCompany.com

1048326

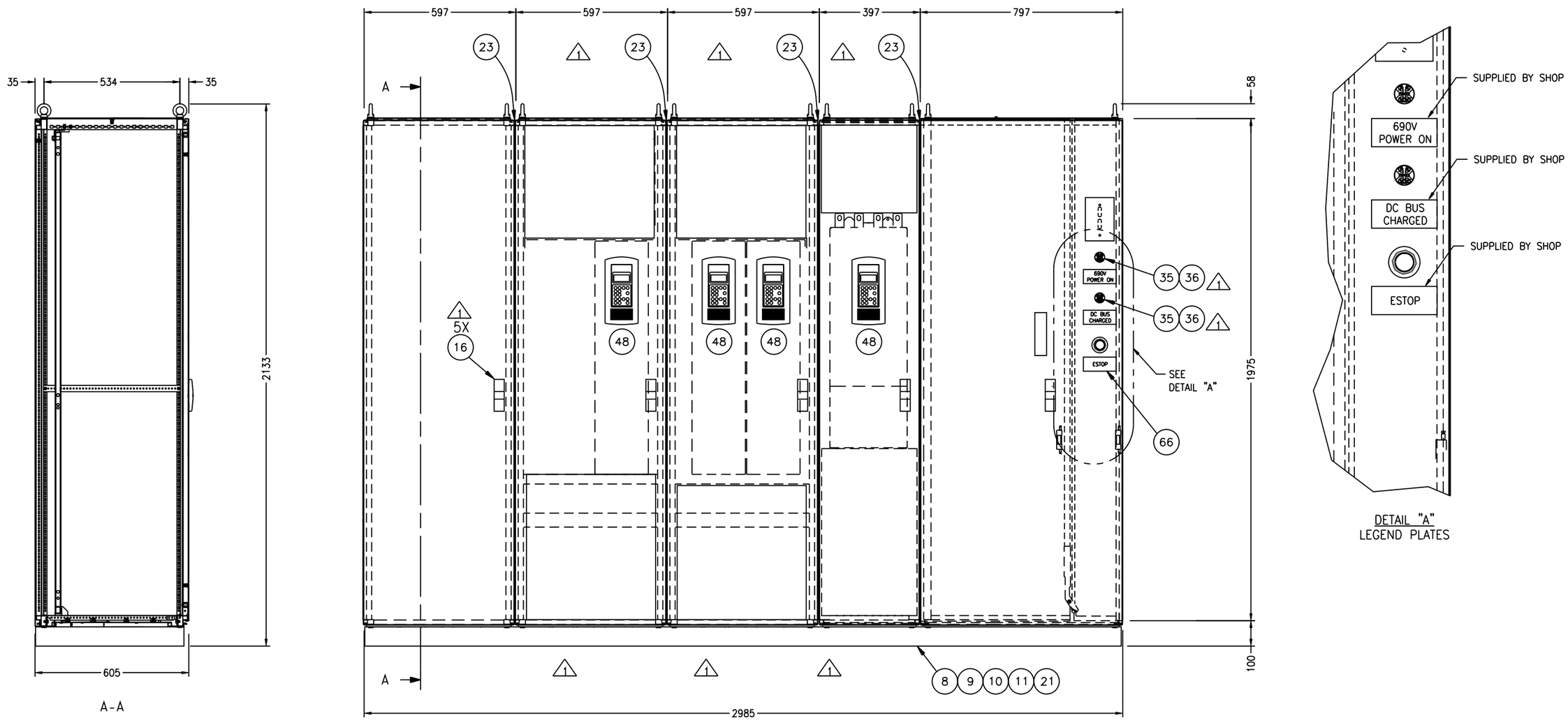

QTY. -1	PART No.	DESCRIPTION	WT. EA. kg	MATERIAL	ITEM

D123245

REV	DESCRIPTION	ZONE	BY/DATE
1	REMOVED BALLONS 17,37,60,67		DBS 20DEC11

PROPRIETARY NOTICE

The information disclosed hereon, is the sole property of the Robbins Company, and remains the sole property, it shall not be duplicated in full or part, used by, or disclosed to any other party without the prior written consent of the Robbins Company. By accepting this information, recipient agrees to abide in total with this notice, without any modification whatsoever to the conditions. This material is on loan only, and is to be returned upon request to the Robbins Company.

TOLERANCES UNLESS NOTED	
FAB (mm)	0-300 ±1.5
	300-1500 ±3
	1500-6000 ±6
	6000+ ±12
FLAME CUT STD/CLASS	
WELDING STD/CLASS	
MACHINING (mm)	X ±1.5
	X.X ±1.0
	X.XX ±.40
	X.XXX ±.100
	ANGLES ±1°
	SURFACE FINISH 3.2
BRAZING STD/CLASS	

MACHINE | NEXT ASSY

UNLESS NOTED, ALL DIM'S ARE mm

DO NOT SCALE

THIRD ANGLE PROJECTION

ALL GEOMETRIC DIMENSIONING AND TOLERANCING PER ISO R1101 - 1983

DIMS (X) ARE REF

SCALE 1:1

TITLE

VFD CABINET ASSEMBLY EPB, 3-DRIVE

SIZE D | DWG No D123245 | REV 1 | SHT 2 OF 10 | ORIGIN Solon Kent Oak Hill RC

Phone: (440) 248-3303
Fax: (440) 248-1702

Robbins
THE ROBBINS COMPANY
29100 Hall Street
Solon, Ohio 44139 USA

DRAWN D.SUMPTER DATE 19OCT11
CHECKED B.DONOVAN DATE 19OCT11

Kent, WA:
Phone (253) 872-0500
Fax: (253) 872-0199
Oak Hill, WV:
Phone (304) 465-5880
Fax: (304) 465-5886

QTY. -1	PART No.	DESCRIPTION	WT. EA. kg	MATERIAL	ITEM

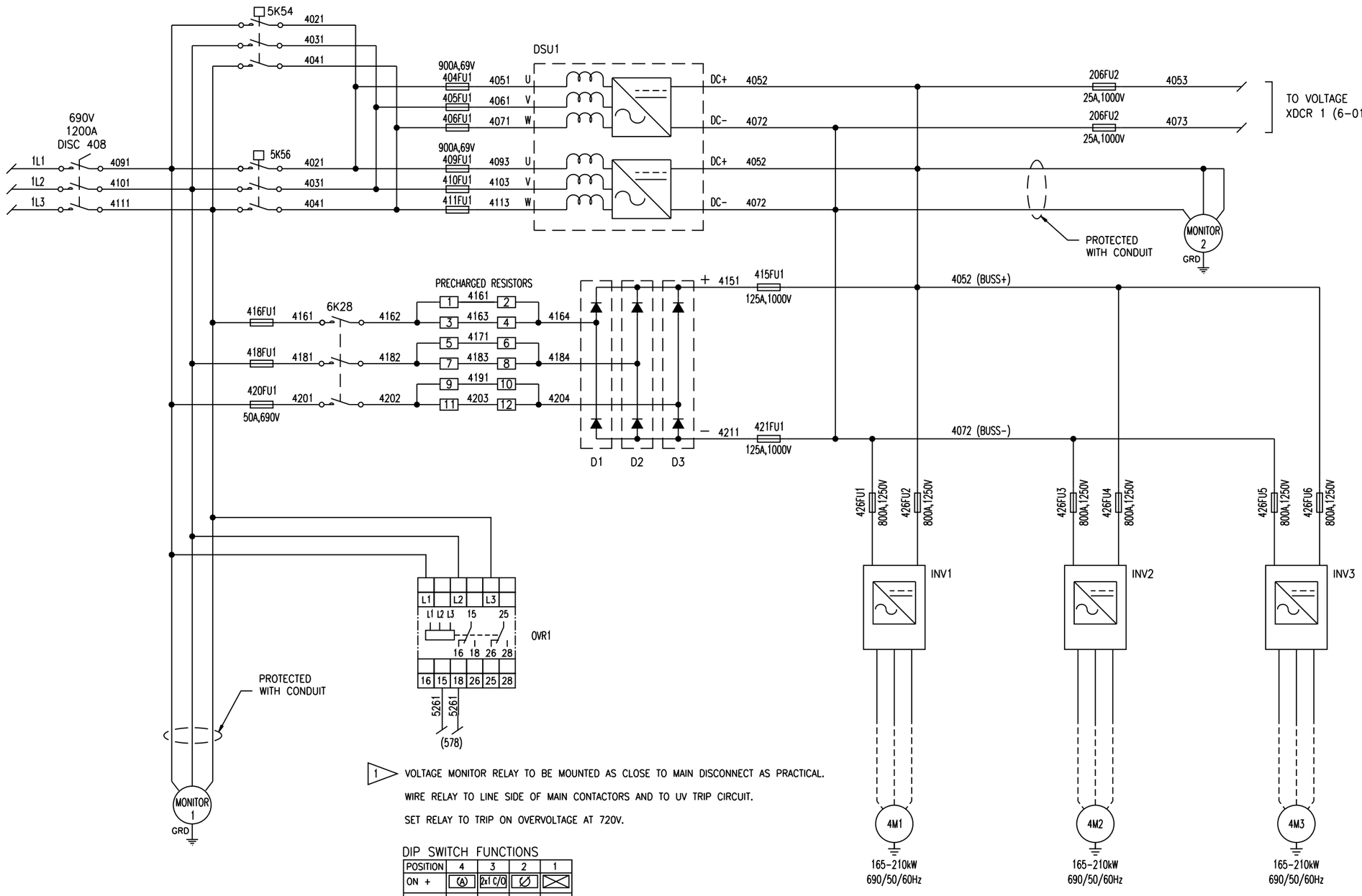

1. VOLTAGE MONITOR RELAY TO BE MOUNTED AS CLOSE TO MAIN DISCONNECT AS PRACTICAL.

WIRE RELAY TO LINE SIDE OF MAIN CONTACTORS AND TO UV TRIP CIRCUIT.

SET RELAY TO TRIP ON OVERVOLTAGE AT 720V.

DIP SWITCH FUNCTIONS

POSITION	4	3	2	1
ON +	Ⓐ	2x1 C/O	Ø	⊠
OFF	Ø	1x2 C/O	○	■

1. TIMING FUNCTION
   ON ON-DELAYED
   OFF OFF-DELAYED
2. PHASE SEQUENCE MONITORING
   ON DEACTIVATED
   OFF ACTIVATED
3. OPERATING PRINCIPLE OF OUTPUT
   ON 2x1 C/O CONTACT
   OFF 1x2 C/O CONTACT
4. PHASE SEQUENCE CORRECTION
   ON ACTIVATED
   OFF DEACTIVATED

OUTPUT RELAY R1 IS RESPONSIVE TO OVER VOLTAGE, OUTPUT RELAY R2 IS RESPONSIVE TO UNDER VOLTAGE. IN CASE OF OTHER FAULTS, BOTH OUTPUT RELAYS REACT SYNCHRONOUSLY.

PROPRIETARY NOTICE
The information disclosed herein is the sole property of The Robbins Company. It is not to be disclosed to others, it shall not be duplicated, in full or part, used by, or disclosed to others for any purpose without the written consent of The Robbins Company. By accepting this drawing, recipient agrees to abide by the above restrictions. This material is on loan only and is to be returned upon request.

TOLERANCES UNLESS NOTED
0-300 ±1.5
300-1500 ±3
1600-6000 ±6
6000+ ±12
FRAC (mm)
FLAME CUT SQ/CLASS
WELDING SQ/CLASS
x ±1.5
x.x ±1.0
x.xx ±.40
x.xxx ±.100
ANGLES ±1°
MACHINING (mm)
SURFACE FINISH 32
MACHINING SQ/CLASS
MACHINE
NEXT ASSY
UNLESS NOTED, ALL DIM'S ARE mm
DO NOT SCALE
THIRD ANGLE PROJECTION
ALL GEOMETRIC DIMENSIONING AND TOLERANCING PER ISO R1101 - 1983
DIMS (X) ARE REF
SCALE 1:1

TITLE
VFD CABINET ASSEMBLY EPB, 3-DRIVE

SIZE D | DWG No D123245 | REV 0 | SHT 4 OF 10 | ORIGIN Seton Kent Hgts WA PC

THE ROBBINS COMPANY
29100 Hall Street
Solon, Ohio 44139 USA
Phone: (440) 248-3303
Fax: (440) 248-1702
Kent, WA:
Phone (253) 872-0500
Fax: (253) 872-0199
Oak Hill, WV:
Phone (304) 465-5880
Fax: (304) 465-5886

DRAWN DSUMPTER 19OCT11 | CHECKED B.DONOVAN 19OCT11

D123245

QTY. -1	PART No.	DESCRIPTION	WT. EA. kg	MATERIAL	ITEM

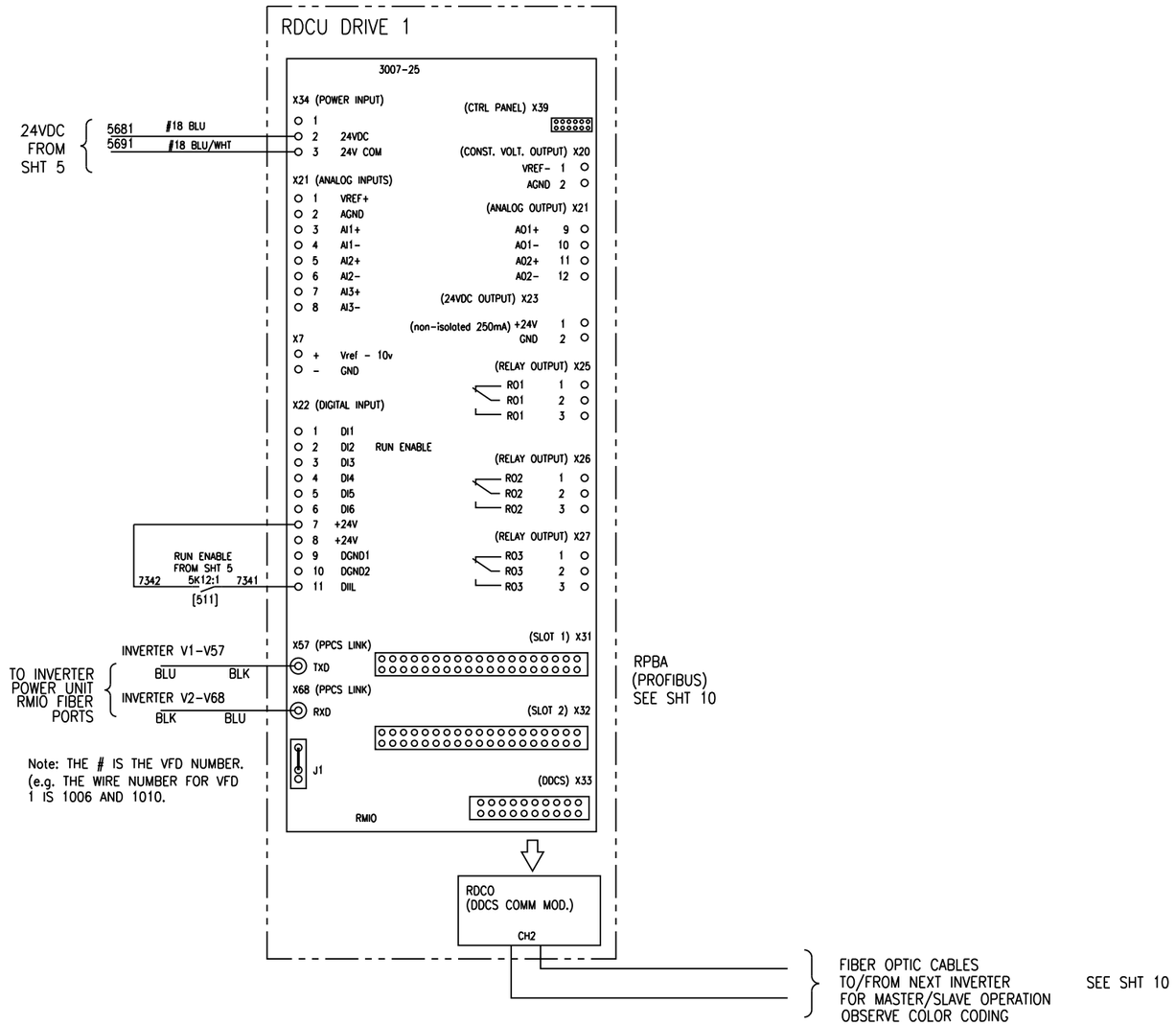

Note: THE # IS THE VFD NUMBER. (e.g. THE WIRE NUMBER FOR VFD 1 IS 1006 AND 1010.

PROPRIETARY NOTICE
The information disclosed herein, is the sole property of The Robbins Company, and shall not be disclosed in full or part, used by, or duplicated for the benefit of any person without the consent of The Robbins Company. By accepting this information, recipient agrees to place it under such restrictions as will prevent its use, disclosure, or duplication which is not specifically authorized. This material is on loan only, and is to be returned upon request.

REV	DESCRIPTION	BY/DATE
		DMK

TOLERANCES UNLESS NOTED
FAB (mm): 0-300 ±1.5; 300-1500 ±5; 1500-6000 ±6; 6000+ ±12
FLAME CUT SEE/CLASS
WELDING SEE/CLASS
MACHINING (mm): x ±1.5; x.x ±1.0; x.xx ±.40; x.xxx ±.100; ANGLES ±1°
SURFACE FINISH 32
MACHINING SEE/CLASS

MACHINE
NEXT ASSY
UNLESS NOTED, ALL DIM'S ARE mm
DO NOT SCALE
THIRD ANGLE PROJECTION
ALL GEOMETRIC DIMENSIONING AND TOLERANCING PER ISO R1101 - 1983
DIMS (in) ARE REF
SCALE 1:1

TITLE
VFD CABINET ASSEMBLY EPB, 3-DRIVE

SIZE D | DWG No D123245 | REV 0 | SHT 7 OF 10 | ORION Spec Rel Rel'd to AC

Robbins
THE ROBBINS COMPANY
29100 Hall Street
Solon, Ohio 44139 USA
Phone: (440) 248-3303
Fax: (440) 248-1702
Kent, WA: Phone (253) 872-0500 Fax: (253) 872-0199
Oak Hill, WV: Phone (304) 465-5880 Fax: (304) 465-5886

DRAWN D.SUMPTER DATE 19OCT11
CHECKED B.DONOVAN DATE 19OCT11

D123245

QTY. -1	PART No.	DESCRIPTION	WT. EA. kg	MATERIAL	ITEM

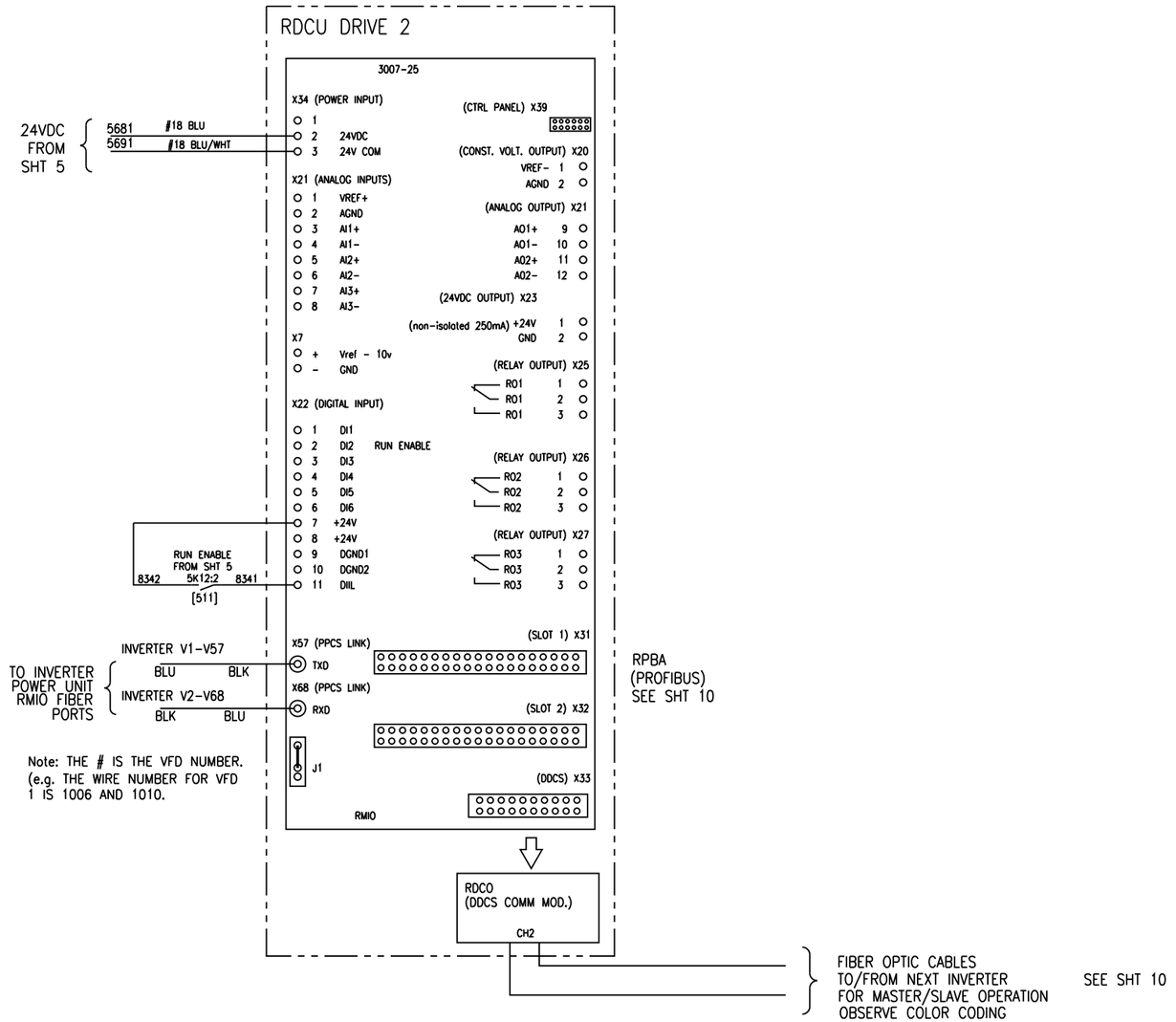

8-01 8-02 8-03 8-04 8-05 8-06 8-07 8-08 8-09 8-10 8-11 8-12 8-13 8-14 8-15 8-16 8-17 8-18 8-19 8-20 8-21 8-22 8-23 8-24 8-25 8-26 8-27 8-28 8-29 8-30 8-31 8-32 8-33 8-34 8-35 4-36 8-37 8-38 8-39 8-40 8-41 8-42 8-43 8-44 8-45 8-46 8-47 8-48 8-49 8-50 8-51 8-52 8-53 8-54 8-55 8-56 8-57 8-58 8-59 8-60 8-61 8-62 8-63 8-64 8-65 8-66 8-67 8-68 8-69 8-70

BY/ DATE	DESCRIPTION	REV
DMK		

PROPRIETARY NOTICE
The information disclosed herein, is the sole property of The Robbins Company, and is not to be published, or shall not be duplicated in full or part, used by, or disclosed to others for any purpose without the written consent of The Robbins Company. By accepting this information, recipient agrees to place it under the strictest confidence and to use it for evaluation purposes only. This material is on loan only, and is to be returned upon request. Unpublished rights reserved under the International Copyright laws.

TOLERANCES UNLESS NOTED	
FAB (mm) 0-300	±1.5
300-1500	±5
1500-6000	±6
6000+	±12
FLAME CUT SEE/CLASS	
WELDING SEE/CLASS	
MACHINING (mm) x	±1.5
x.x	±1.0
x.xx	±.40
x.xxx	±.100
ANGLES	±1 °
SURFACE FINISH	32
BRAZING SEE/CLASS	

MACHINE	NEXT ASSY
UNLESS NOTED, ALL DIM'S ARE mm	
DO NOT SCALE	
THIRD ANGLE PROJECTION	
ALL GEOMETRIC DIMENSIONING AND TOLERANCING PER ISO R1101 - 1983	SCALE 1:1
DIMS (in) ARE REF	

TITLE
VFD CABINET ASSEMBLY EPB, 3-DRIVE

SIZE	DWG No	REV	SHT	ORIGIN
D	D123245	0	8 OF 10	Spec Ref kb

Robbins
THE ROBBINS COMPANY
29100 Hall Street
Solon, Ohio 44139 USA
Phone: (440) 248-3303
Fax: (440) 248-1702
Kent, WA:
Phone (253) 872-0500
Fax: (253) 872-0199
Oak Hill, WV:
Phone (304) 465-5880
Fax: (304) 465-5886

DRAWN D.SUMPTER DATE 19OCT11
CHECKED B.DONOVAN DATE 19OCT11

D123245

QTY. -1	PART No.	DESCRIPTION	WT. EA. kg	MATERIAL	ITEM

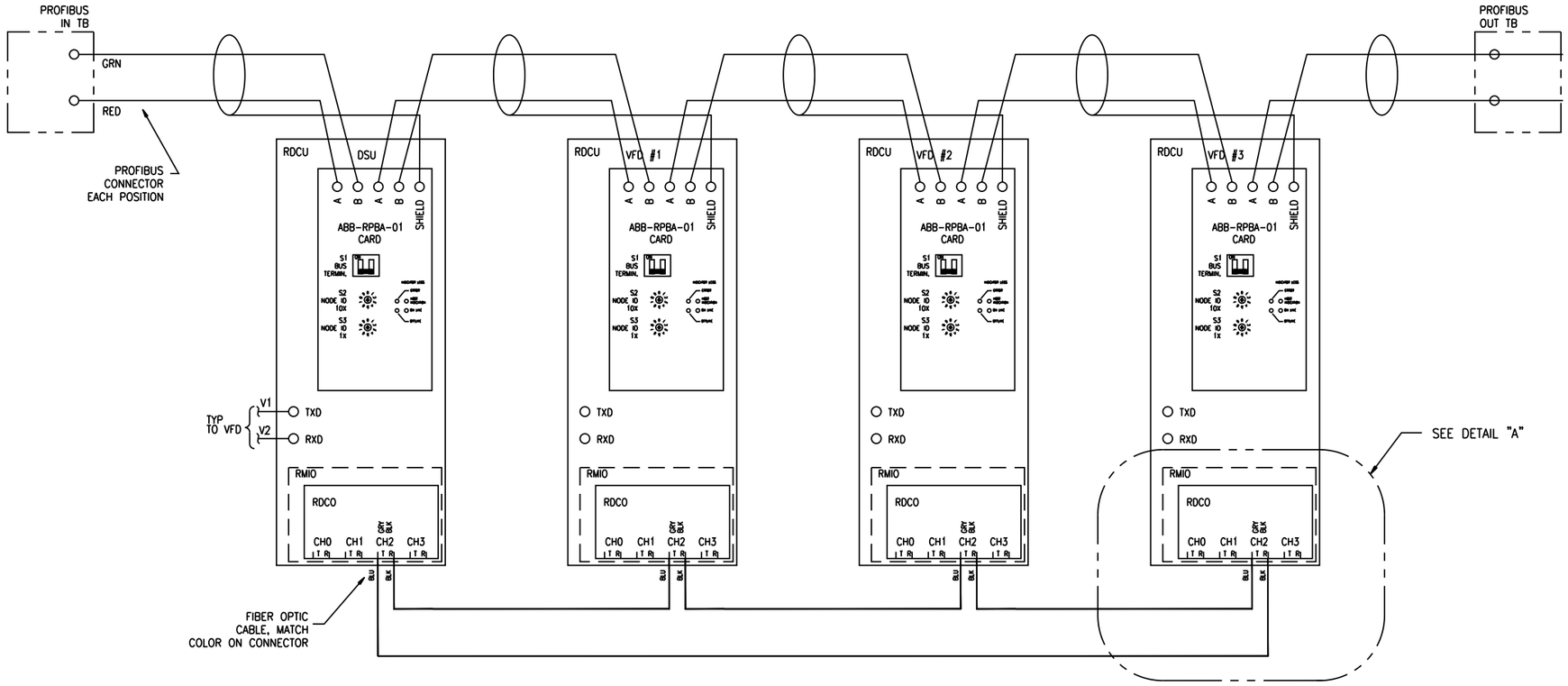

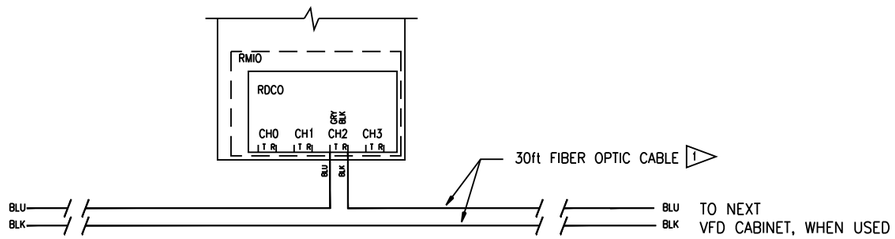

1 DETAIL A: ALTERNATE FIBER OPTIC INTERTIE CONNECTION FOR MULTIPLE VFD CABINETS

REV	DESCRIPTION	ZONE	BY/ DATE
1	ADDED DETAIL A, REMOVED LINE NUMBERS		DBS 20DEC11

PROPRIETARY NOTICE
The information disclosed hereon, is the sole property of the Robbins Company, and remains the sole property. It shall not be duplicated in full or part, used by, or disclosed to any other party without the prior written consent of the Robbins Company. By accepting this information, recipient agrees to abide in total with this notice, without any modification whatsoever to the conditions. This material is on loan only, and is to be returned upon request to the Robbins Company.

TOLERANCES UNLESS NOTED	
FAB (mm)	0-300 ±1.5
	300-1500 ±3
	1500-6000 ±6
	6000+ ±12
FLAME CUT STD/CLASS	
WELDING STD/CLASS	
MACHINING (mm)	X ±1.5
	X.X ±1.0
	X.XX ±.40
	X.XXX ±.100
	ANGLES ±1°
	SURFACE FINISH 3.2
MACHINING STD/CLASS	

MACHINE | NEXT ASSY

UNLESS NOTED, ALL DIM'S ARE mm

DO NOT SCALE

THIRD ANGLE PROJECTION

ALL GEOMETRIC DIMENSIONING AND TOLERANCING PER ISO R1101 - 1983 DIMS (X) ARE REF

SCALE 1:1

TITLE
VFD CABINET ASSEMBLY EPB, 3-DRIVE

SIZE D | DWG No D123245 | REV 1 | SHT 10 OF 10 | ORIGIN Solon Kent Oak Hill RC

Phone: (440) 248-3303
Fax: (440) 248-1702
Robbins
THE ROBBINS COMPANY
29100 Hall Street
Solon, Ohio 44139 USA

DRAWN D.SUMPTER DATE 19OCT11 | CHECKED B.DONOVAN DATE 19OCT11

Kent, WA:
Phone (253) 872-0500
Fax: (253) 872-0199
Oak Hill, WV:
Phone (304) 465-5880
Fax: (304) 465-5886

D123245

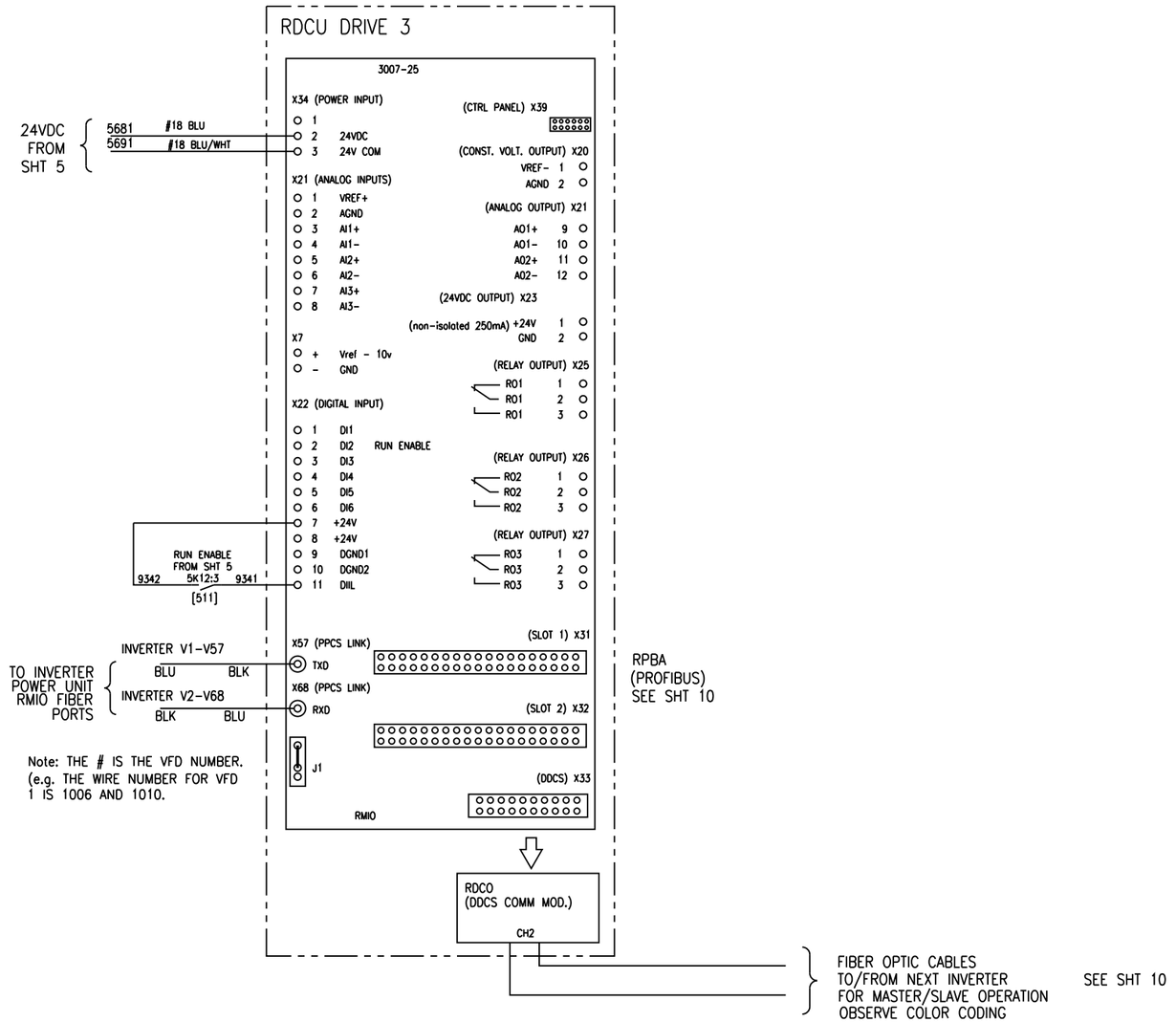

Note: THE # IS THE VFD NUMBER. (e.g. THE WIRE NUMBER FOR VFD 1 IS 1006 AND 1010.

QTY. -1	PART No.	DESCRIPTION	WT. EA. kg	MATERIAL	ITEM

D123245

REV	DESCRIPTION	ZONE	BY/DATE

PROPRIETARY NOTICE
The information disclosed hereon, is the sole property of the Robbins Company, and remains their sole property. It shall not be duplicated in full or part, used by, or disclosed to any other party without the prior written consent of the Robbins Company. By accepting this information, recipient agrees to abide in total with this notice, without any modification whatsoever to the conditions. This material is on loan only, and is to be returned upon request to the Robbins Company.

TOLERANCES UNLESS NOTED	
0-300	±1.5
300-1500	±3
1500-6000	±6
6000+	±12
FLAME CUT STD/CLASS	
WELDING STD/CLASS	
MACHINING (mm)	x ±1.5
	x.x ±1.0
	x.xx ±.40
	x.xxx ±.100
	ANGLES ±1°
SURFACE FINISH	3.2
MACHINING STD/CLASS	

MACHINE	NEXT ASSY

UNLESS NOTED, ALL DIM'S ARE mm

DO NOT SCALE

THIRD ANGLE PROJECTION

ALL GEOMETRIC DIMENSIONING AND TOLERANCING PER ISO R1101 - 1983 DIMS (X) ARE REF

SCALE 1:1

TITLE
VFD CABINET ASSEMBLY EPB, 3-DRIVE

SIZE D | DWG No D123245 | REV 0 | SHT 9 OF 10 | ORIGIN Salon Kent Oak Hill RC

Phone: (440) 248-3303
Fax: (440) 248-1702
Robbins
THE ROBBINS COMPANY
29100 Hall Street
Solon, Ohio 44139 USA

DRAWN D.SUMPTER DATE 19OCT11 | CHECKED B.DONOVAN DATE 19OCT11

Kent, WA:
Phone (253) 872-0500
Fax: (253) 872-0199
Oak Hill, WV:
Phone (304) 465-5880
Fax: (304) 465-5886

QTY. -1	PART No.	DESCRIPTION	WT. EA. kg	MATERIAL	ITEM

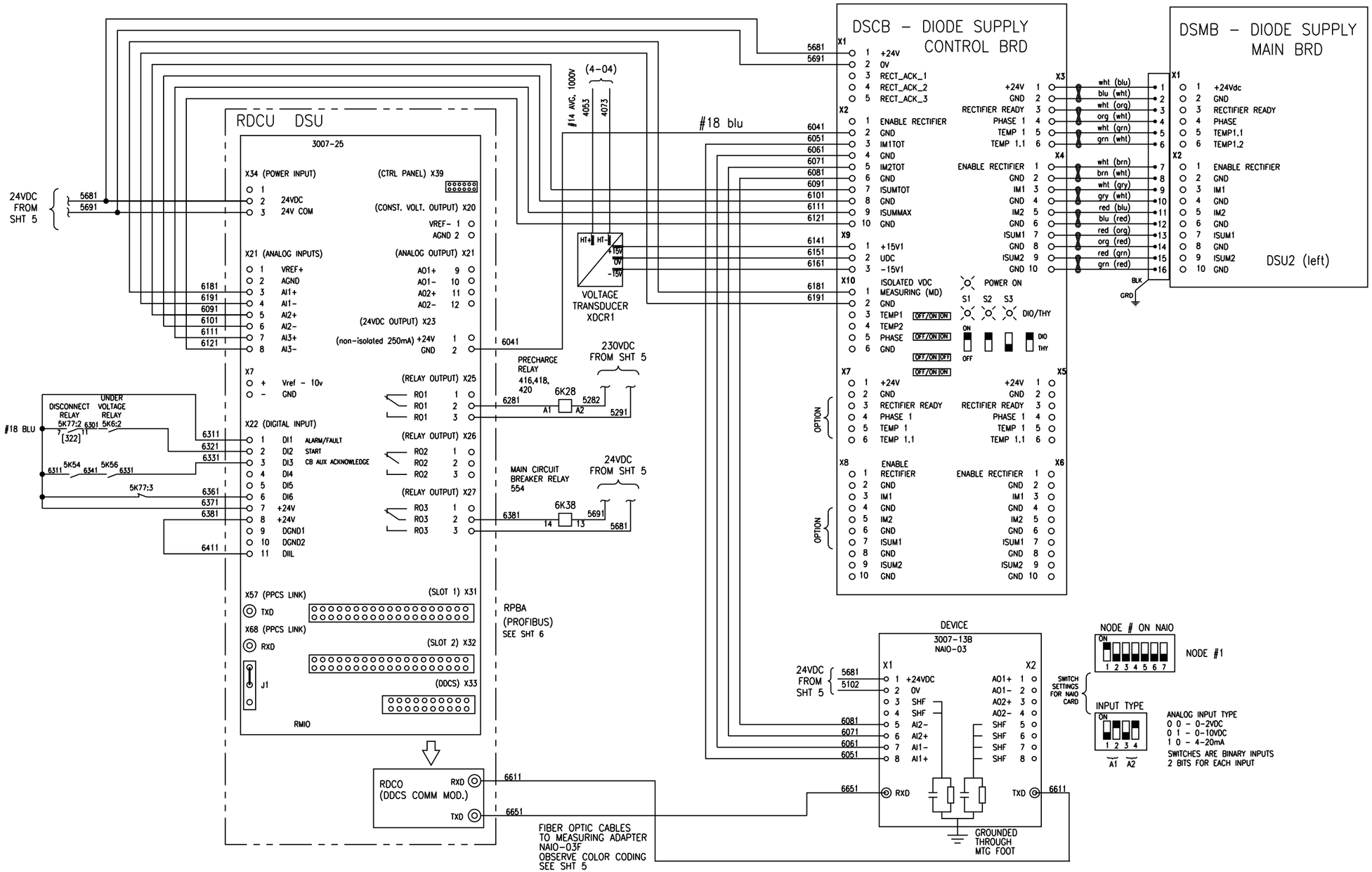

REV	DESCRIPTION	BY/ DATE	ZONE
		DWK	

PROPRIETARY NOTICE
The information disclosed herein, is the sole property of The Robbins Company, and shall not be published in full or part, used by, or disclosed to others for any purpose without the written consent of The Robbins Company. By accepting this information, recipient agrees to abide by the above notice. This material is on loan only, and is to be returned upon request.

TOLERANCES UNLESS NOTED	
0-300	±1.5
300-1600	±5
1600-6000	±6
6000+	±12
FLAME CUT SRD/CLASS	
WELDING SRD/CLASS	
MACHINING (mm) x	±1.5
x.x	±1.0
x.xx	±.40
x.xxx	±.100
ANGLES	±1 °
SURFACE FINISH	32
BRAZING SRD/CLASS	

MACHINE	NEXT ASSY
UNLESS NOTED, ALL DIM'S ARE mm	
DO NOT SCALE	
THIRD ANGLE PROJECTION	
ALL GEOMETRIC DIMENSIONING AND TOLERANCING PER ISO R1101 - 1983	SCALE 1:1
DIMS (X) ARE REF	

TITLE
VFD CABINET ASSEMBLY EPB, 3-DRIVE

SIZE	DWG No	REV	SHT	ORION
D	D123245	0	6 OF 10	

Robbins
THE ROBBINS COMPANY
29100 Hall Street
Solon, Ohio 44139 USA
Phone: (440) 248-3303
Fax: (440) 248-1702
Kent, WA:
Phone (253) 872-0500
Fax: (253) 872-0199
Oak Hlll, WV:
Phone (304) 465-5880
Fax: (304) 465-5886

DRAWN	CHECKED
D.SUMPTER	B.DONOVAN
DATE 19OCT11	DATE 19OCT11

D123245

QTY	PART No.	DESCRIPTION	DWG No.	Component/Vendor ID	ITEM
15	A115960-12	CUBE67 PROFIBUS CONNETOR, M12 , MALE 5P, 5M			24
7	A115960-15	CUBE67 7/8" POWER PLUG AND CABLE FEMALE 5P 5M			25
9	A116347-3	CUBE20 BUSNODE			26
4	A116347-7	CUBE20 DIGITAL I/O MODULE, 16 IN / 16 OUT			27
18	A116347-4	CUBE20 ANA INPUT MODULE, 4 INPUT			28
3	A116347-5	CUBE20 ANA OUTPUT MODULE, 4 OUTPUT			29
5	A116347-1	CUBE20 DIGITAL INPUT MODULE, 24VDC, 32PT			30
4	A116347-2	CUBE20 DIGITAL OUTPUT MODULE, 24VDC, 32PT			31
2	A81885-8	QUICKPANEL VIEW, LOADED			32
7	A115960-4	CUBE67 DIGITAL INPUT MODULE 8xM12 EXTENDABLE			33
1	A115960-36	CUBE67 COMM CABLE, M-F, 6P GREEN 10M			34
1	D120949-2	I/O REPEATER, PROFIBUS			35
36	A115960-16	CUBE67 POWER PLUG AND CABLE FEMALE 5P 10M			36
5	A115960-34	CUBE67 COM CABLE M-F 6P GREEN 5M			37
1	A115960-30	CUBE67 HIGH SPEED COUNTER MODULE CNT2, 4xM12			38
2	A115960-13	CUBE67 PROFIBUS TERMINATOR PLUG, M12 MALE, 4P			39
2	A81885-12	PROFIBUS SLAVE FOR VIEW			40
2	A97179-7	ETHERNET PATCH CABLE, 150FT, RJ45 TO RJ45			41
4 ▷ 5	A115960-28	CUBE67 7/8" BLIND PLUG			42

QTY	PART No.	DESCRIPTION	DWG No.	Component/Vendor ID	ITEM
2	A115960-37	CUBE67 7/8 POWER, M-F, 5P, 1M			1
1	1028202	PROFIBUS MASTER MODULE, PC CARD	1028202		2
3	A118219-1	COMPUTER, 19" PANEL MOUNT, CL1 / DIV2			3
1	A82127-2	ROUTER, 8 PORT			4
3	A97179-5	ETHERNET CABLE, 10FT			5
2	1047594	KEYBOARD AND MOUSE, CL1 / DIV2			6
1	A104136-7	SOFTWARE, LD PC W/VIEW, HARDKEY			7
1	A117802-1	PROFIBUS REPEATER, SIEMENS			8
1	A119018-1	PROFIBUS CONNECTION, STRAIGHT			9
1	D122403-3	RECEIVER ERECTOR RADIO CONTROL, PROFIBUS			10
4 ▷ 210	A115960-23	CUBE67 M12 PLASTIC BLIND PLUG			11
301	A115960-20	CUBE67 CONN M12 MALE 5P			12
9	A115960-10	CUBE67 COMM CABLE TERMINATOR			13
7	A115960-25	MVK COMBO MODULE, PROFIBUS NODE + 4 X DIG I/O + 4 X ANA 0-10V IN			14
28	A115960-27	ADAPTER CURRENT TO VOLTAGE, M12 MALE PLUG			15
10	A115960-1	CUBE 67 BUSNODE MODULE, PROFIBUS			16
14	A115960-2	CUBE67 DIGITAL I/O MODULE 16xM12, 1.6/2.0A EXTENDABLE			17
18	A115960-6	CUBE67 ANALOG INPUT CURRENT MODULE, 4xM12, END OF LINE			18
2	A115960-7	CUBE67 ANALOG OUTPUT CURRENT MODULE 4xM12, END OF LINE			19
31	1030498	PROFIBUS SUB-D CONNECTOR, 90 DEG.	1030498		20
7	A115960-8	CUBE67 COMM. CABLE, M-F 6P, GREEN, 0.3M			21
29	A115960-9	CUBE67 COMM. CABLE, M-F 6P, GREEN, 1M			22
17	A115960-11	CUBE67 PROFIBUS CONNECTOR M12, FEMALE 5P, SCREW TERMS			23

BOM IS FOR REFERENCE ONLY.
ALL PARTS ARE ORDERED ON
THEIR RESPECTIVE ASSEMBLIES.

IP ADDRESSES			
ID	ITEM	EPB-376 MACHINE IP ADDRESS	EPB-377 MACHINE IP ADDRESS
7N101	MASTER PC, TBM CONTROL	192.168.1.21	192.168.1.31
7N102	MIRROR PC, TBM CONTROL	192.168.1.22	192.168.1.32
7N103	MIRROR PC, TBM CONTROL	192.168.1.23	192.168.1.33
QP1	LOWER THRUST STATION	192.168.1.25	192.168.1.35
QP2	UPPER THRUST STATION	192.168.1.26	192.168.1.36

NOTES:

1. SET PROFIBUS STATION NUMBER ON EACH COMPONENT AS INDICATED.
2. LABEL ALL CABLE CONNECTORS TO AGREE WITH MODULE RECEPTACLE LABELS AS SHOWN.
3. SEE MACHINE ELECTRICAL SCHEMATIC FOR WIRING DETAILS.

4 ▷ PLUG ALL UNUSED PORTS WITH SEAL PLUGS.

PROPRIETARY NOTICE
This information disclosed hereon is the sole property of The Robbins Company and may not be reproduced in whole or in part, used by, or disclosed to any other person without the written consent of The Robbins Company. By accepting this information, recipient agrees to use such information solely for the purpose authorized by The Robbins Company. The material in this copy, whether in hard copy or electronic form, is subject to these restrictions.

MACHINE	NEXT ASSY
EPB2016-376/377	1046350

UNLESS NOTED ALL DIMS ARE mm
TOLERANCES UNLESS NOTED
0-300 ± 1.5
300-1500 ± 3
1500-6000 ± 6
6000+ ± 12
THIRD ANGLE PROJECTION
DIMENSIONS (X) ARE REFERENCE
ALL GEOMETRIC DIMENSIONING & TOLERANCING PER ANSI Y14.5-2009

MACHINING
X ± 1.5
X.X ± 1.0
X.XX ± .40
X.XXX ± .100
ANGLES ± 1°
SURFACE FINISH

REV	DESCRIPTION	REV'D BY / DATE	APP'D BY / DATE

TITLE: PLC INSTALLATION SAN FRANCISCO

SIZE	DWG No.	REV	SHT	SCALE
D	1049633	0	1 OF 20	1:1

DO NOT SCALE

DRAWN BY: P.BRENNAN
DATE: 6/1/2012
CHECKED STANDARDS: P.BRENNAN
CHECKED DESIGN: D.HOBBS
WEIGHT TOTAL:
APPROVED BY: D.HOBBS
DATE: 5/3/2012

Robbins
www.TheRobbinsCompany.com

1049633

OPERATOR CONTROL CONSOLE

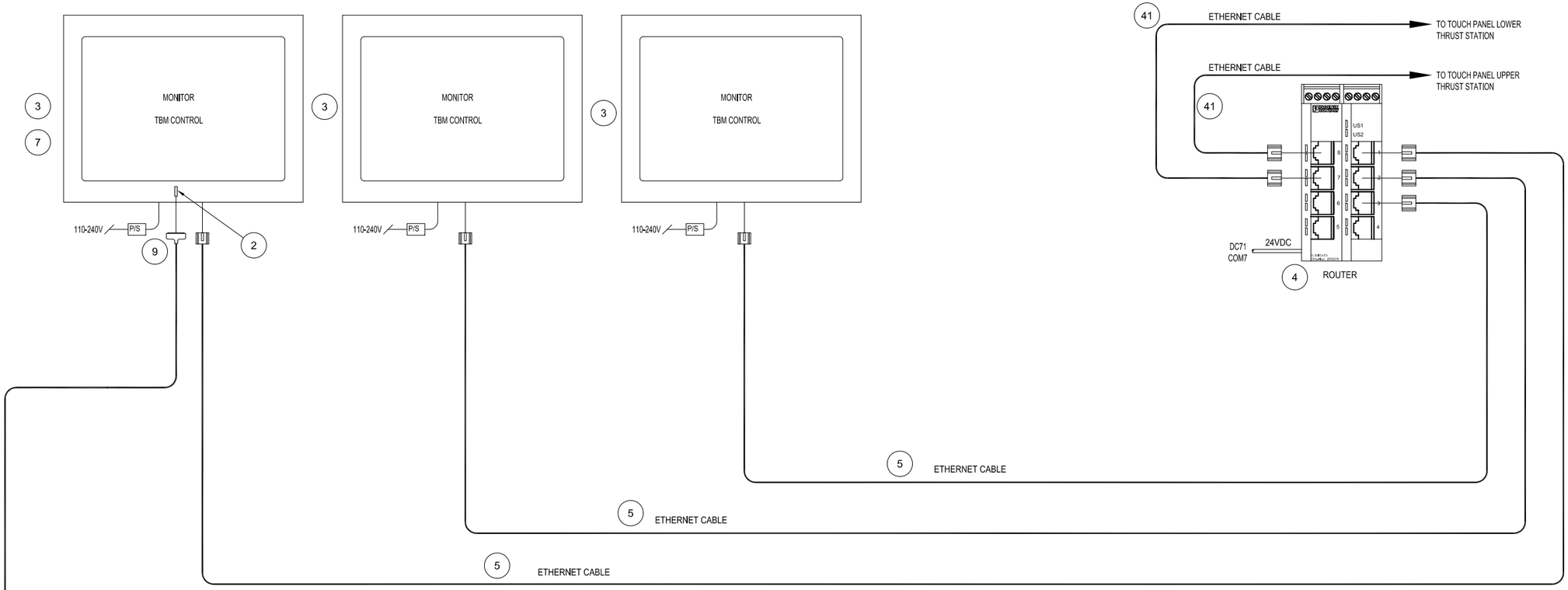

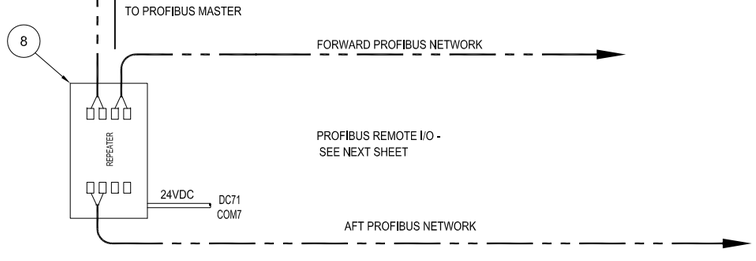

PROPRIETARY NOTICE
The information disclosed hereon is the sole property of Robbins and is considered proprietary thereto. It shall not be duplicated in full or part, used by, or disclosed to any person, firm or corporation for any purpose except as the Company (by accepting this information, recipient agrees to the foregoing) may authorize in writing. Recipient agrees to withdraw or to limit the conditions. The material is to be returned to Robbins upon request or when no longer needed.

MACHINE	NEXT ASSY
EPB2016-378/377	1046350

UNLESS NOTED ALL DIMS ARE mm
TOLERANCES UNLESS NOTED

FRACTIONS	DECIMALS	ANGLES
0-300 ± 1/2	X ± 1.0	± 1°
300-1500 ± 3/4	X.X ± 0.5	
1500-6000 ± 1	X.XX ± .40	
6000+ ± 1 1/2	X.XXX ± .100	

THIRD ANGLE PROJECTION

DIMENSIONS ARE REFERENCE
ALL GEOMETRIC DIMENSIONING & TOLERANCING PER ANSI Y14.5-2009

REV	DESCRIPTION	REV'D BY / DATE	APP'D BY / DATE

TITLE
PLC INSTALLATION
SAN FRANCISCO

SIZE	DWG No.	REV	SHT	SCALE
D	1049633	0	2 OF 20	1:1

DO NOT SCALE

DRAWN BY	CHECKED STD/MEMBER
P.BRENNAN	P.BRENNAN
DATE 6/1/2012	CHECKED DESIGN D.HOBBS
WEIGHT TOTAL	APPROVED BY D.HOBBS
	DATE 6/1/2012

Robbins

www.TheRobbinsCompany.com

1049633

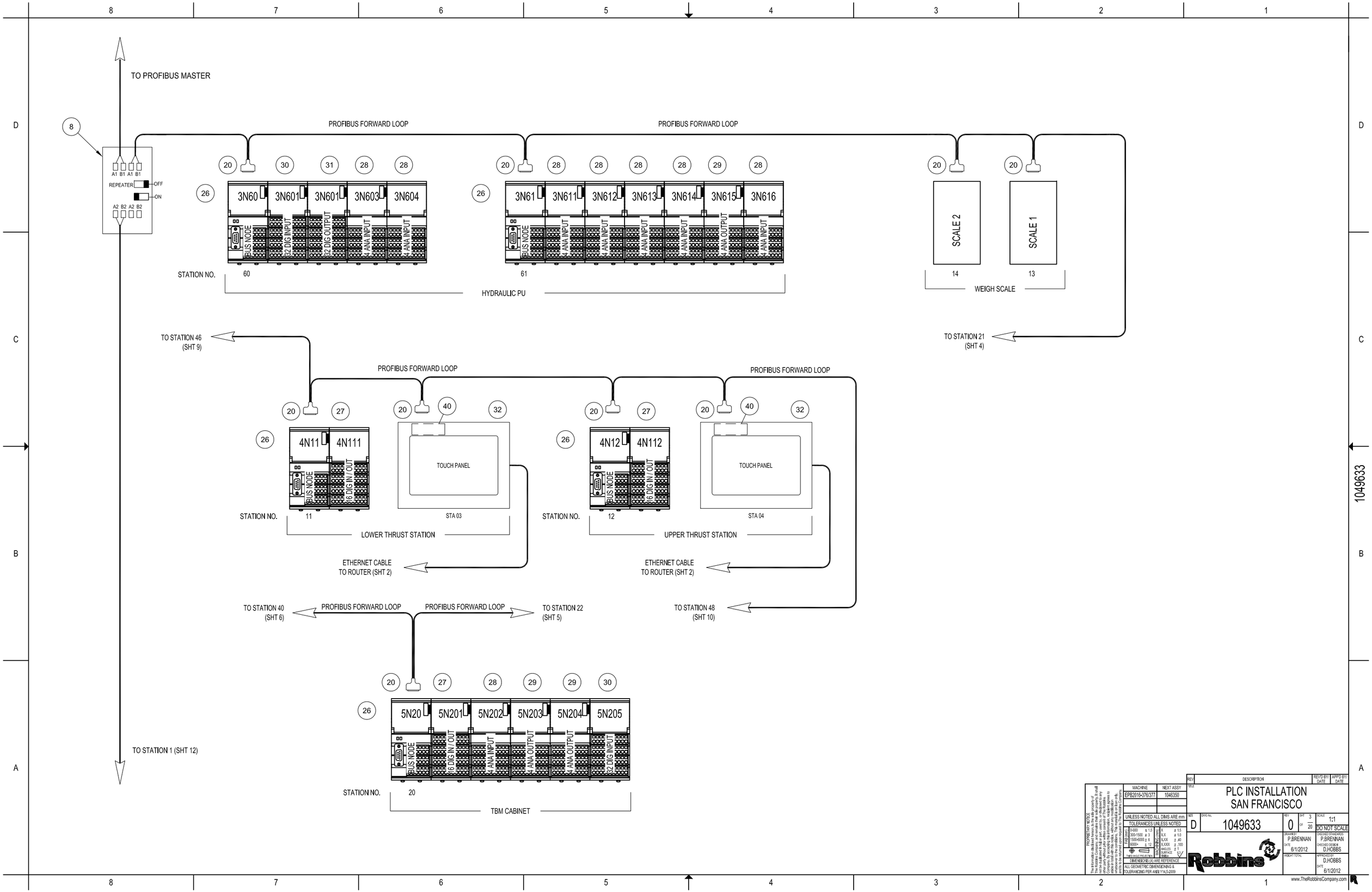

MACHINE	NEXT ASSY
EPB2016-376/377	1046350

UNLESS NOTED ALL DIMS ARE mm

TOLERANCES UNLESS NOTED

0-300	± 1.5	X	± 1.5
300-1500	± 3	X.X	± 1.0
1500-6000	± 6	X.XX	± .40
6000+	± 12	X.XXX	± .100
		ANGLES	± 1
		SURFACE	63

THIRD ANGLE PROJECTION

DIMENSIONS (X) ARE REFERENCE

ALL GEOMETRIC DIMENSIONING & TOLERANCING PER ANSI Y14.5-2009

REV	DESCRIPTION	REV'D BY/ DATE	APP'D BY/ DATE

TITLE

PLC INSTALLATION SAN FRANCISCO

SIZE	DWG No.	REV	SHT	SCALE
D	1049633	0	3 OF 20	1:1 DO NOT SCALE

DRAWN BY	CHECKED STANDARDS
P.BRENNAN	P.BRENNAN
DATE 6/1/2012	CHECKED DESIGN D.HOBBS
WEIGHT TOTAL	APPROVED BY D.HOBBS
	DATE 6/1/2012

Robbins

www.TheRobbinsCompany.com

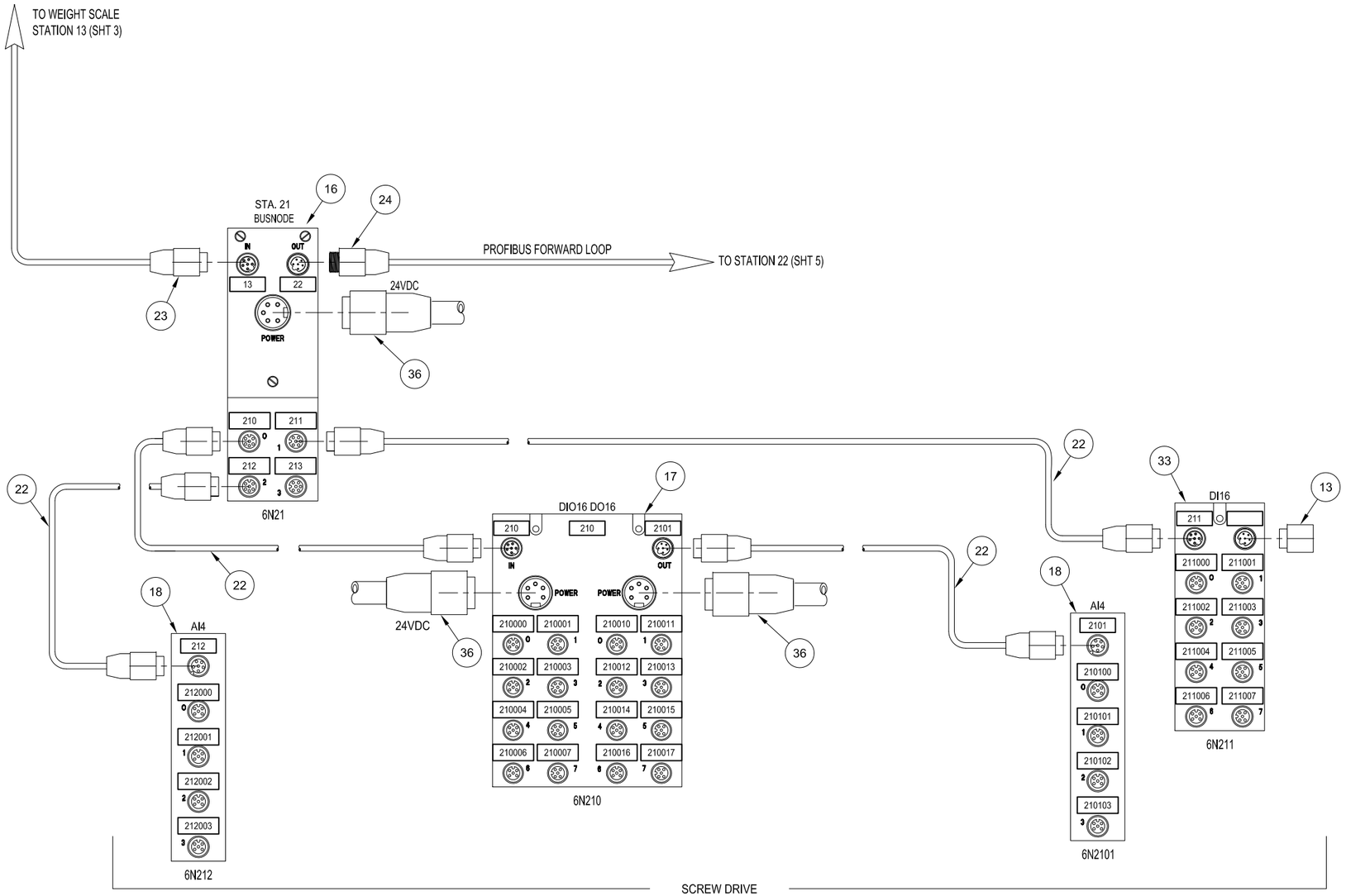

PROPRIETARY NOTICE
This information disclosed hereon is the sole property of Robbins Company and is loaned subject to return upon demand and not to be duplicated in full or part, used by, or disclosed to any other person or corporation without the written consent of Robbins Company. By accepting this information, recipient agrees to use it solely for the purpose intended by Robbins Company and in accordance to the conditions. This material is on loan only, and shall be returned upon request. Robbins Company retains title and ownership of this material.

MACHINE	NEXT ASSY
EPB2016-376/377	1046350

UNLESS NOTED ALL DIMS ARE mm
TOLERANCES UNLESS NOTED

0-300	± .5	X	± 1.5
300-1500	± .9	X.X	± 1.0
1500-6000	± 6	X.XX	± .40
6000+	± 12	X.XXX	± .100
		ANGLES	± 1°
		SURFACE FINISH	63

DIMENSIONS (X) ARE REFERENCE
ALL GEOMETRIC DIMENSIONING & TOLERANCING PER ANSI Y14.5-2009

REV	DESCRIPTION	REV'D BY / DATE	APP'D BY / DATE

TITLE: PLC INSTALLATION SAN FRANCISCO

SIZE: D | DWG No.: 1049633 | REV: 0 | SHT 4 OF 20 | SCALE: 1:2 DO NOT SCALE

DRAWN BY: P.BRENNAN | DATE: 6/1/2012
CHECKED STANDARDS: P.BRENNAN
CHECKED DESIGN: D.HOBBS
APPROVED BY: D.HOBBS | DATE: 6/1/2012
WEIGHT TOTAL:

Robbins

www.TheRobbinsCompany.com

1049633

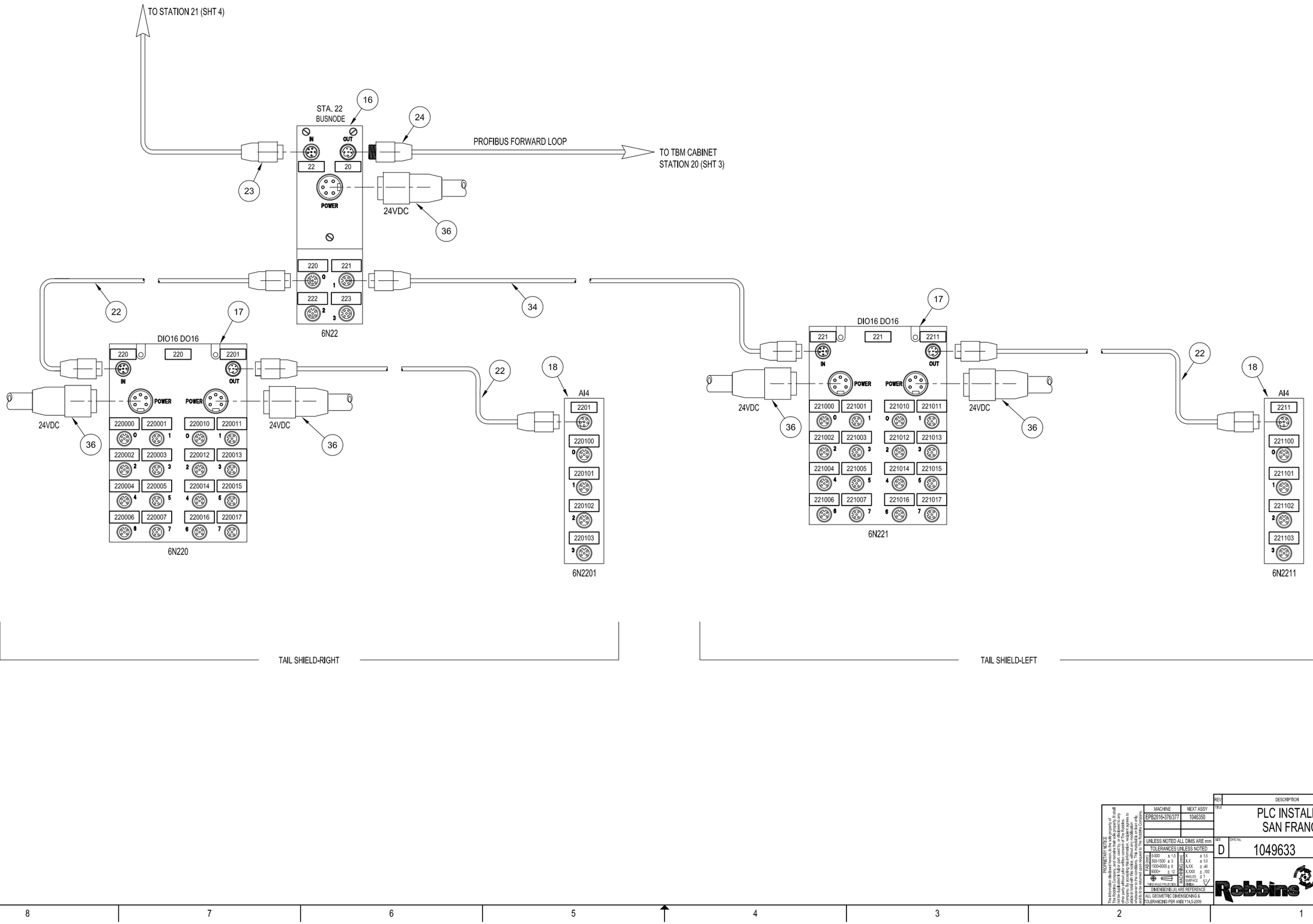

MACHINE	NEXT ASSY	REV	DESCRIPTION	REV'D BY / DATE	APP'D BY / DATE				
EPB2016-376/377	1046350								
		TITLE	PLC INSTALLATION SAN FRANCISCO						
UNLESS NOTED ALL DIMS ARE mm		SIZE	DWG No.	REV	SHT	SCALE			
TOLERANCES UNLESS NOTED		D	1049633	0	5 OF 20	1:2			
0-300 ± 1.5 300-1500 ± 3 1500-6000 ± 6 6000+ ± 12	X ± 1.5 X.X ± 1.5 X.XX ± .40 X.XXX ± .100 ANGLES ± 1 SURFACE 63					DRAWN BY P.BRENNAN	CHECKED STANDARDS P.BRENNAN		
THIRD ANGLE PROJECTION						DATE 6/1/2012	CHECKED DESIGN D.HOBBS		
DIMENSIONS (A) ARE REFERENCE						WEIGHT TOTAL	APPROVED BY D.HOBBS		
ALL GEOMETRIC DIMENSIONING & TOLERANCING PER ANSI Y14.5-2009							DATE 6/1/2012		

PROPRIETARY NOTICE
The information disclosed hereon is the sole property of Robbins Company and is not to be used, copied, or disclosed in whole or in part, used by, or disclosed to any person or entity without the express written consent of Robbins Company. By accepting this information, recipient agrees to use it solely for the purpose for which it was intended and to otherwise hold it in confidence in accordance with the terms and conditions of any written agreement between Robbins Company and recipient. The recipient is on notice that unauthorized use of this information may result in civil liability.

Robbins

www.TheRobbinsCompany.com

1049633

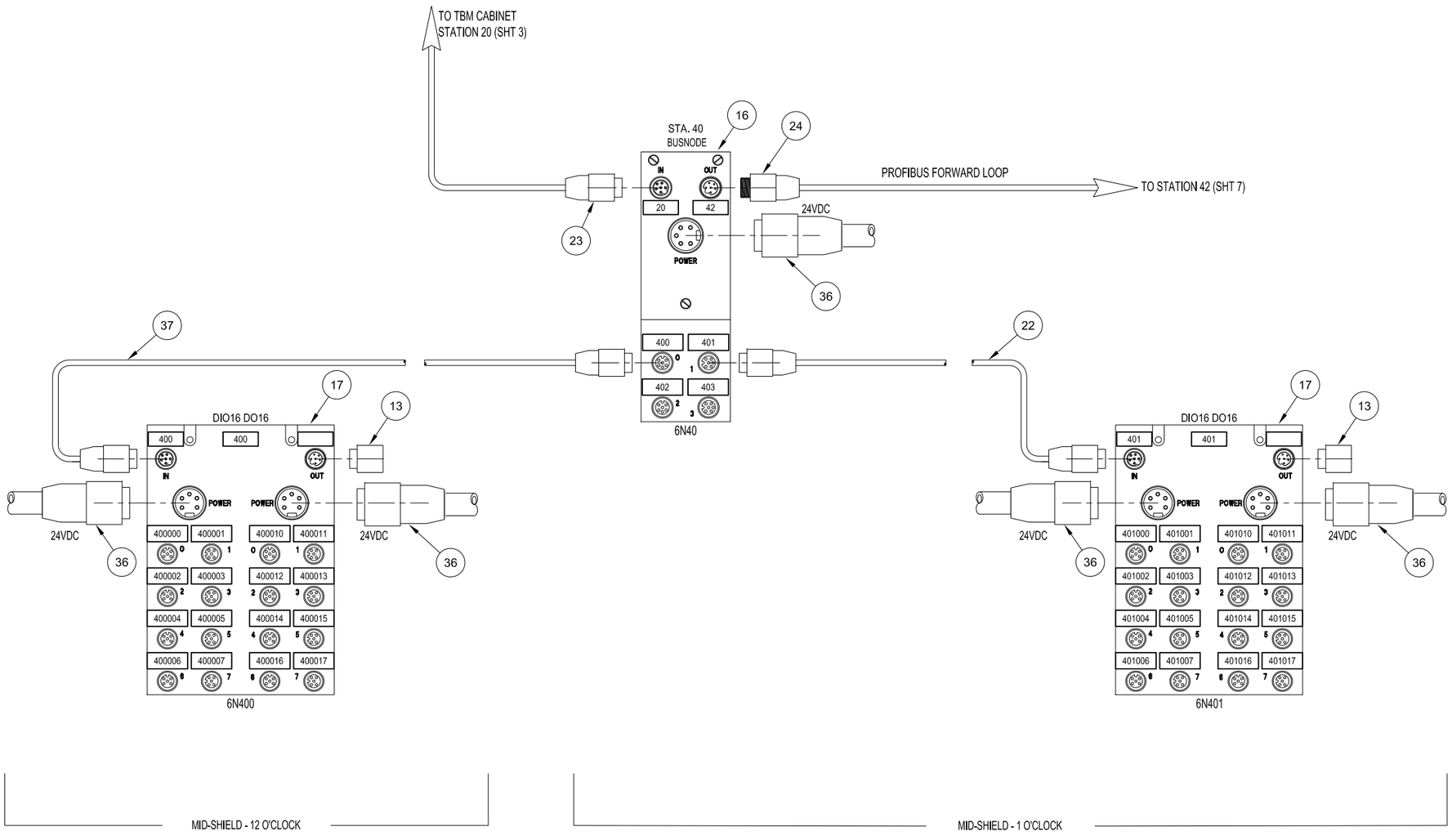

PROPRIETARY NOTICE
The information disclosed hereon is the sole property of The Robbins Company and is furnished in confidence. It shall not be duplicated in full or part, used by, or disclosed to any person, firm or corporation for any purpose without the written permission of The Robbins Company. By accepting this information, recipient agrees to maintain its confidentiality and to use it only for purposes whatsoever to the conditions. The material is or is to be furnished in connection with a contract with The Robbins Company.

MACHINE	NEXT ASSY
EPB2016-378/377	1046350

UNLESS NOTED ALL DIMS ARE mm
TOLERANCES UNLESS NOTED
FRACTIONS ± 1/64
0-300 ± 1.0
300-1500 ± .5
1500-6000 ± .6
6000+ ± 1.0
THIRD ANGLE PROJECTION
DECIMALS
X ± 1.0
X.X ± .5
X.XX ± .40
X.XXX ± .100
ANGLES ± 1°
SURFACE 63
DIMENSIONLESS REFERENCE
ALL GEOMETRIC DIMENSIONING & TOLERANCING PER ANSI Y14.5-2009

REV	DESCRIPTION	REV'D BY / DATE	APP'D BY / DATE

TITLE
PLC INSTALLATION SAN FRANCISCO

SIZE	DRG No.	REV	SHT	SCALE
D	1049633	0	6 of 20	1:2

DO NOT SCALE

DRAWN BY	CHECKED STD/MGR/DSN
P.BRENNAN	P.BRENNAN
DATE	CHECKED DESIGN
6/1/2012	D.HOBBS
WEIGHT TOTAL	APPROVED BY
	D.HOBBS
	DATE
	6/1/2012

Robbins

www.TheRobbinsCompany.com

1049633

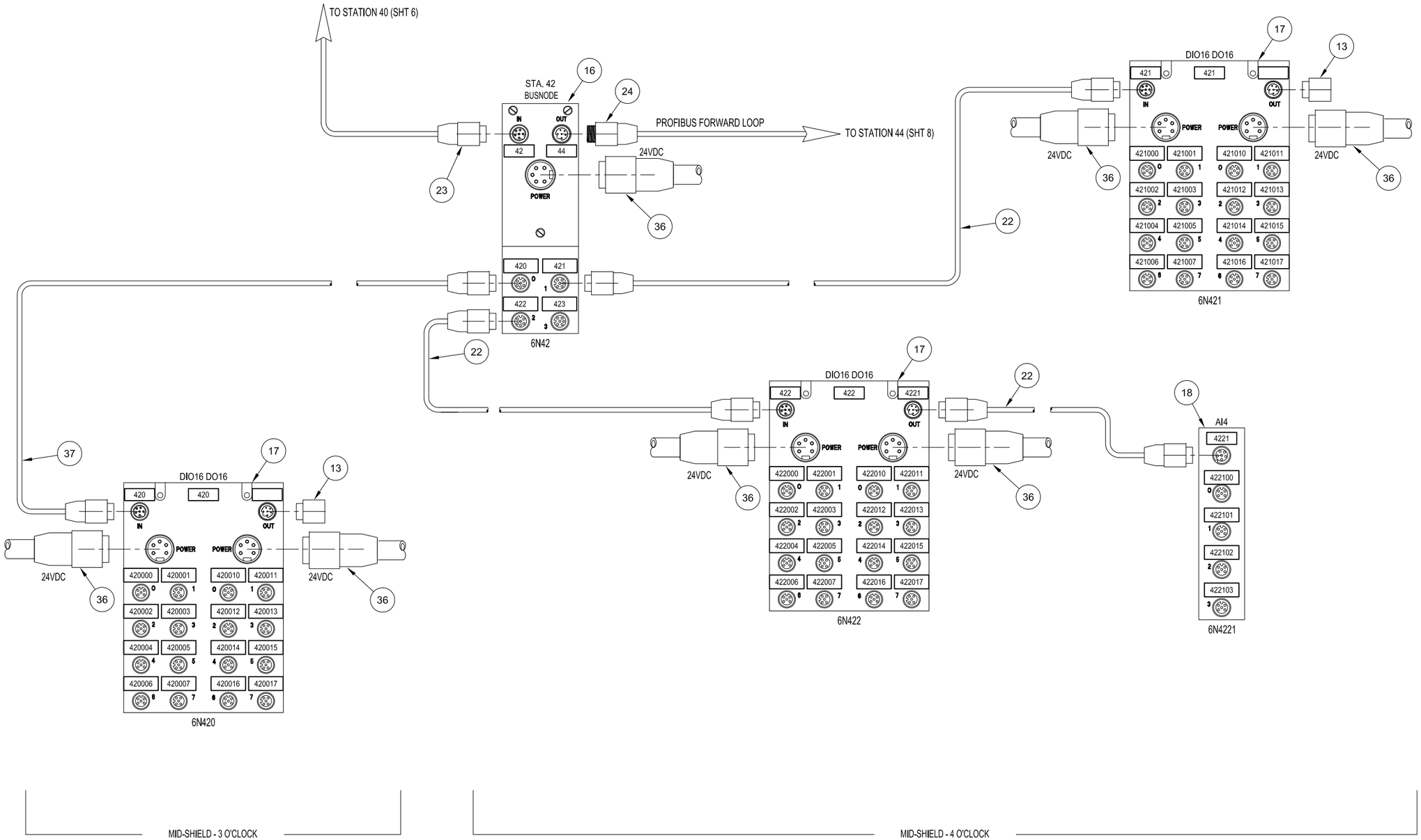

1049633

MACHINE	NEXT ASSY
EPB2016-376/377	1046350

UNLESS NOTED ALL DIMS ARE mm

TOLERANCES UNLESS NOTED

FAB (mm)		MACHINING (mm)	
0-300	± 1.5	X	± 1.5
300-1500	± 3	X.X	± 1.0
1500-6000	± 6	X.XX	± .40
6000+	± 12	X.XXX	± .100
		ANGLES	± 1
		SURFACE	63

THIRD ANGLE PROJECTION

DIMENSIONS (X) ARE REFERENCE

ALL GEOMETRIC DIMENSIONING & TOLERANCING PER ANSI Y14.5-2009

REV	DESCRIPTION	REV'D BY/ DATE	APP'D BY/ DATE

TITLE

PLC INSTALLATION SAN FRANCISCO

SIZE D | DWG No. 1049633 | REV 0 | SHT 7 OF 20 | SCALE 1:2 | DO NOT SCALE

DRAWN BY P.BRENNAN | DATE 6/1/2012 | CHECKED STANDARDS P.BRENNAN | CHECKED DESIGN D.HOBBS | WEIGHT TOTAL | APPROVED BY D.HOBBS | DATE 6/1/2012

Robbins

www.TheRobbinsCompany.com

PROPRIETARY NOTICE
The information disclosed herein is the sole property of The Robbins Company and remains the sole property. It shall not be disclosed in full or part, used by or disclosed to any other party without prior written consent of The Robbins Company. By accepting this information, recipient agrees to use it solely with the prior written consent of The Robbins Company and to the conditions. This material is on loan only, and is to be returned upon request to The Robbins Company.

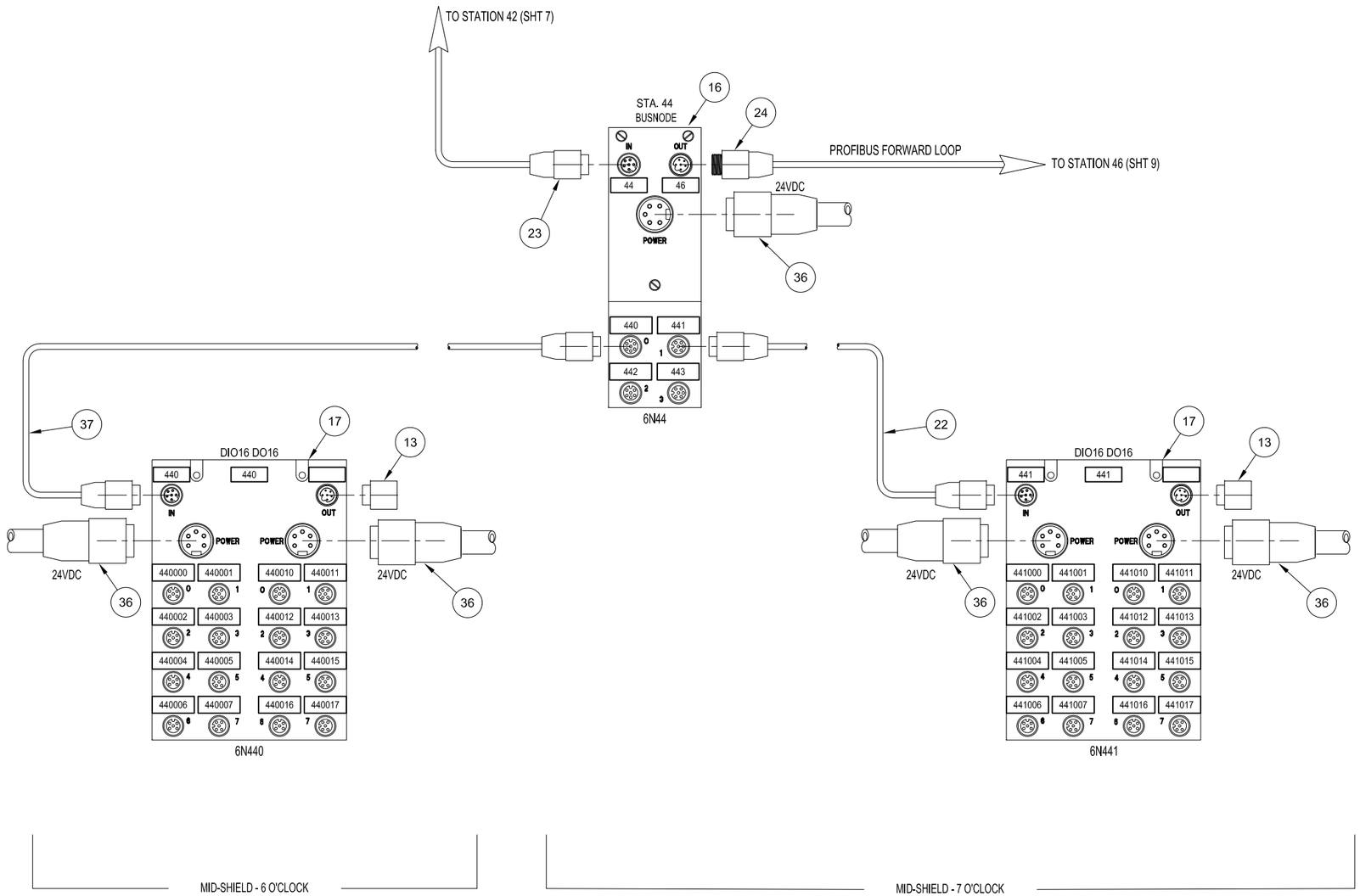

PROPRIETARY NOTICE
This information disclosed hereon is the sole property of Robbins & Myers, Inc. and contains trade secrets which shall not be duplicated in full or part, used by, or disclosed to any person, firm or corporation for any purpose whatsoever by the Company. By accepting this information, recipient agrees to not duplicate in full or part, use by, or disclose to others absent express written authorization from the Company, for any purpose whatsoever to the conditions. This material is on loan and, upon request, is to be returned to Robbins & Myers, Inc.

MACHINE	NEXT ASSY
EPB2016-378/377	1046350

UNLESS NOTED ALL DIMS ARE mm

TOLERANCES UNLESS NOTED

FRACTIONS (mm)	DECIMALS (mm)
0-300 ± 1.5	X ± 1.0
300-1500 ± 3	.XX ± 0.5
1500-6000 ± 6	.XXX ± .40
6000+ ± 12	.XXXX ± .100
THIRD ANGLE PROJECTION	ANGLES ± 1
	SURFACE FINISH 125

DIMENSIONS IN ARE REFERENCE

ALL GEOMETRIC DIMENSIONING & TOLERANCING PER ANSI Y14.5-2009

REV	DESCRIPTION	REV'D BY: DATE	APP'D BY: DATE

TITLE
PLC INSTALLATION SAN FRANCISCO

SIZE	DWG No.	REV	SHT	SCALE
D	1049633	0	8 of 20	1:2

DO NOT SCALE

DRAWN BY: P.BRENNAN
DATE: 6/1/2012
CHECKED STANDARDS: P.BRENNAN
CHECKED DESIGN: D.HOBBS
WEIGHT TOTAL:
APPROVED BY: D.HOBBS
DATE: 6/1/2012

Robbins

www.TheRobbinsCompany.com

1049633

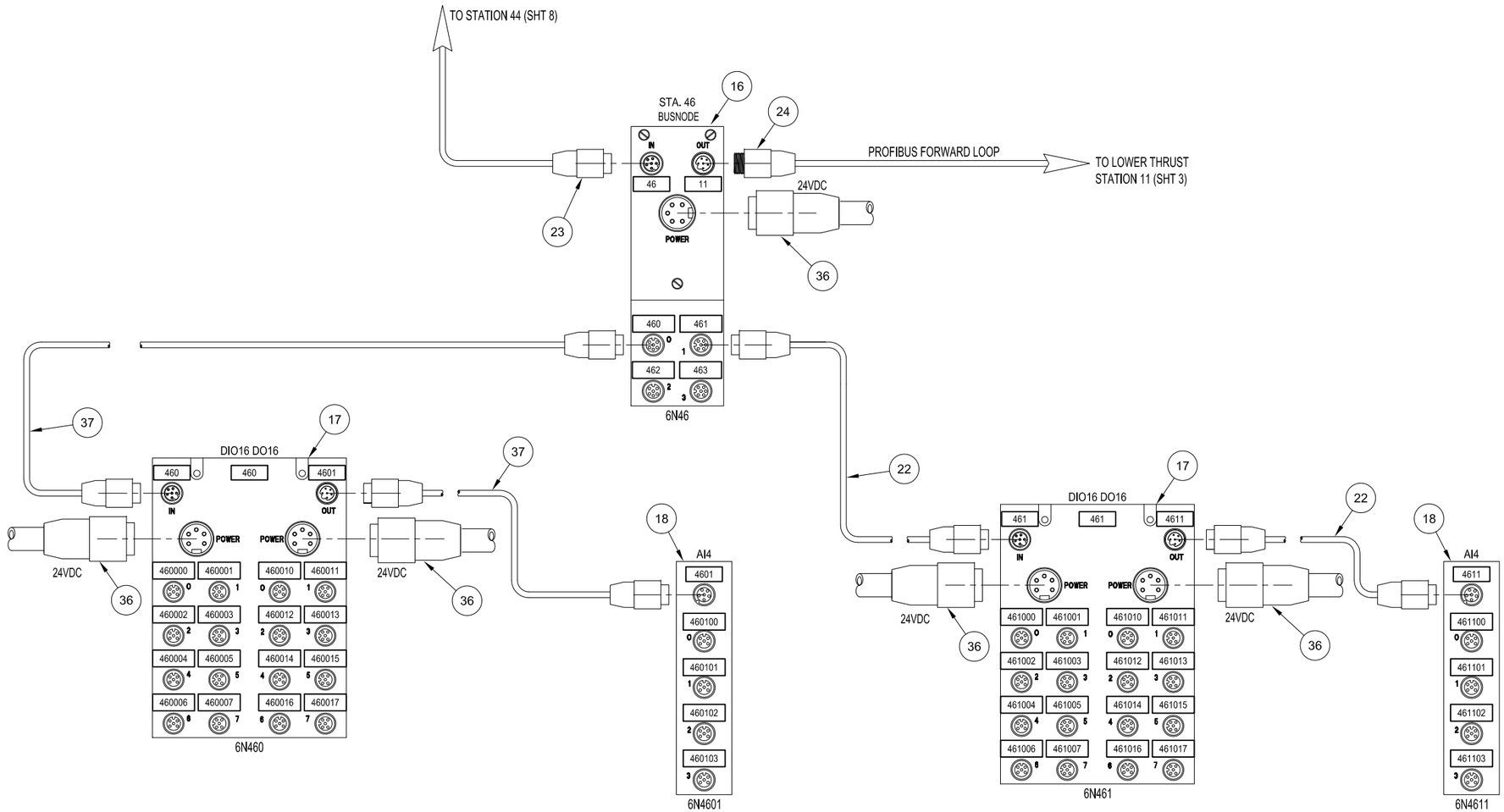

PROPRIETARY NOTICE
The information disclosed hereon is the sole property of The Robbins Company and is loaned subject to return demand and not to be duplicated in full or part, used by, or disclosed to any unauthorized person without the written consent of The Robbins Company. By accepting this information, recipient agrees to use it only for the purpose for which it is specifically delivered and otherwise to hold The Robbins Company harmless against any misuse of this information.

MACHINE	NEXT ASSY
EPB2016-376/377	1046350

UNLESS NOTED ALL DIMS ARE mm
TOLERANCES UNLESS NOTED

0-300	± 1.5
300-1500	± 3
1500-6000	± 6
6000+	± 12

X	± 1.5
X.X	± 1.0
X.XX	± .40
X.XXX	± .100
ANGLES	± 1°
SURFACE	63
FINISH	

MATERIAL SPEC
FINISH
THIRD ANGLE PROJECTION
DIMENSIONS (A) ARE REFERENCE
ALL GEOMETRIC DIMENSIONING & TOLERANCING PER ANSI Y14.5-2009

REV	DESCRIPTION	REV'D BY / DATE	APP'D BY / DATE

TITLE: PLC INSTALLATION SAN FRANCISCO

SIZE	DWG No.	REV	SHT	SCALE
D	1049633	0	9 of 20	1:2

DO NOT SCALE

DRAWN BY	P.BRENNAN
DATE	6/1/2012
CHECKED STANDARDS	P.BRENNAN
CHECKED 3D/3DX	D.HOBBS
WEIGHT TOTAL	
APPROVED BY	D.HOBBS
DATE	6/1/2012

Robbins
www.TheRobbinsCompany.com

1049633

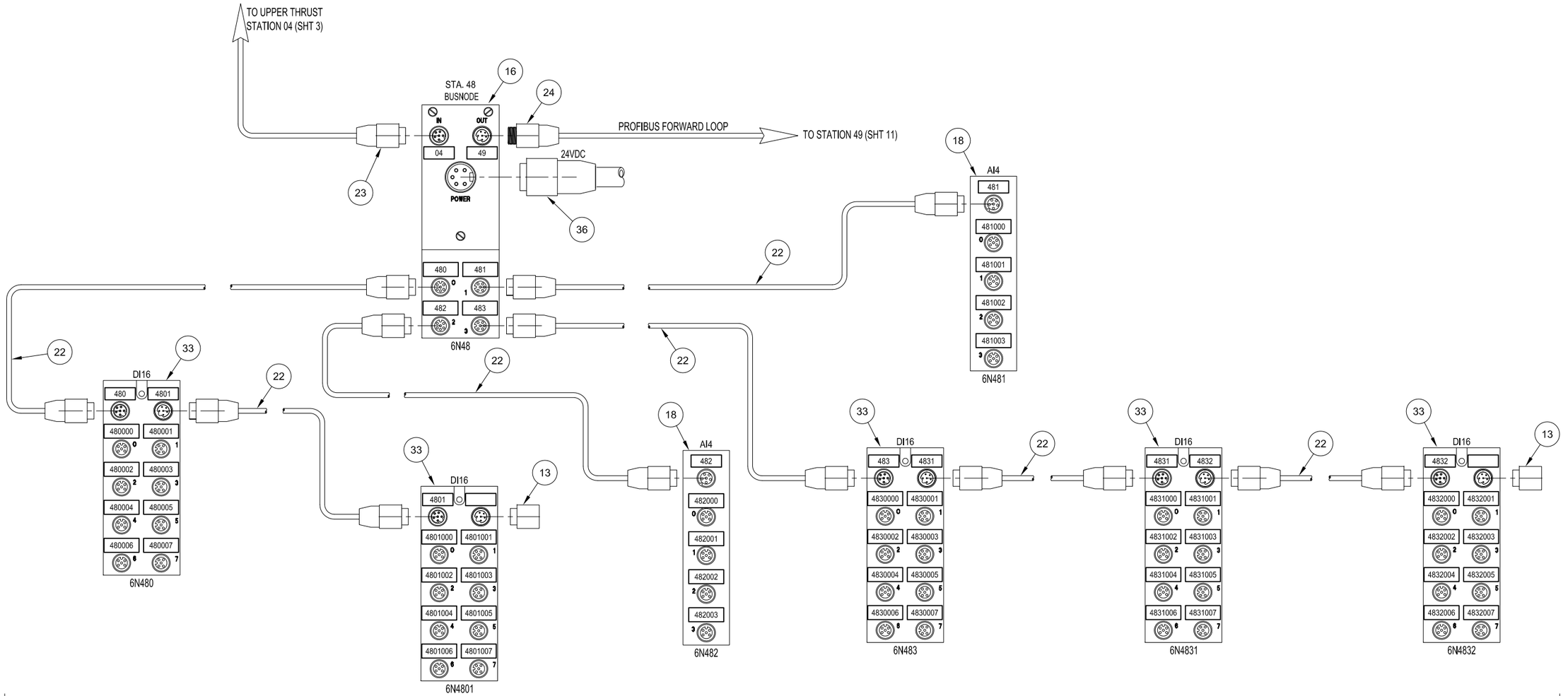

1049633

MACHINE	NEXT ASSY
EPB2016-376/377	1046350

UNLESS NOTED ALL DIMS ARE mm
TOLERANCES UNLESS NOTED

FAB (mm)		MACHINING (mm)	
0-300	± 1.5	X	± 1.5
300-1500	± 3	X.X	± 1.0
1500-6000	± 6	X.XX	± .40
6000+	± 12	X.XXX	± .100
		ANGLES	± 1
		SURFACE	1/2
		FINISH	

THIRD ANGLE PROJECTION

DIMENSIONS (X) ARE REFERENCE

ALL GEOMETRIC DIMENSIONING & TOLERANCING PER ANSI Y14.5-2009

REV	DESCRIPTION	REV'D BY/ DATE	APP'D BY/ DATE

TITLE: PLC INSTALLATION SAN FRANCISCO

SIZE	DWG No.	REV	SHT	SCALE
D	1049633	0	10 OF 20	1:2

DO NOT SCALE

DRAWN BY	CHECKED STANDARDS
P.BRENNAN	P.BRENNAN
DATE 6/1/2012	CHECKED DESIGN D.HOBBS
WEIGHT TOTAL	APPROVED BY D.HOBBS
	DATE 6/1/2012

Robbins

www.TheRobbinsCompany.com

PROPRIETARY NOTICE
The information disclosed herein is the sole property of The Robbins Company and remains the sole property of the Robbins Company. It shall not be disclosed in full or part, used by, or disclosed to any other party without prior written consent of The Robbins Company. By accepting this information, recipient agrees to make its best efforts to prevent any other use or disclosure to any other party without prior written consent of The Robbins Company. This material is not to be sold, reproduced or distributed without prior written consent of The Robbins Company.

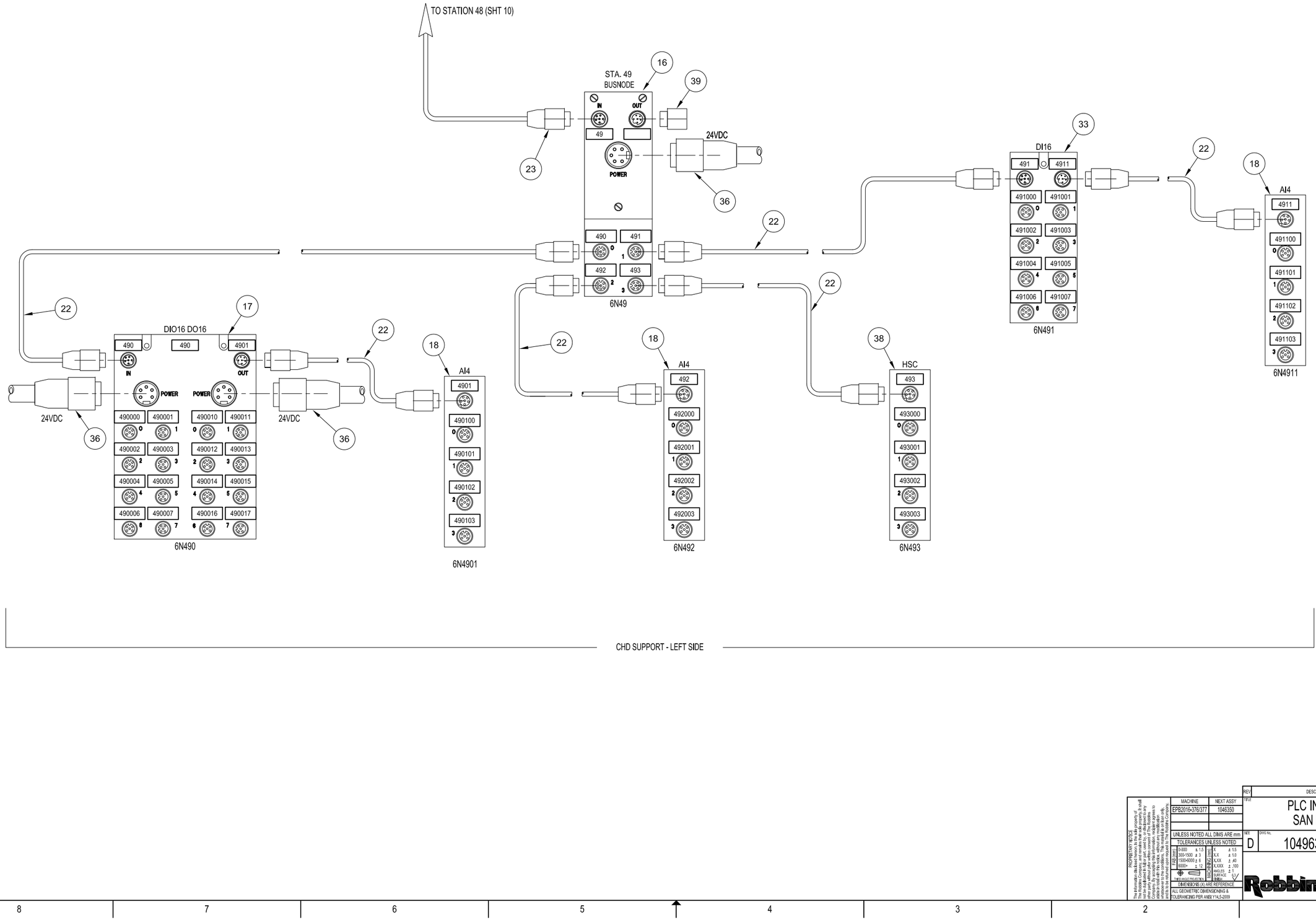

CHD SUPPORT - LEFT SIDE

PROPRIETARY NOTICE
The information disclosed hereon is the sole property of The Robbins Company and should not be used, disclosed to any other individual or firm, or duplicated in any manner, without the express written permission of the Company. By accepting this information, recipient agrees to use it solely for the purpose intended by the Company and to hold it in confidence. This material is not to be sold, assigned, lent or given away in any form, and is to be returned upon request or when no longer needed by recipient.

MACHINE	NEXT ASSY
EPB2016-376/377	1046350

UNLESS NOTED ALL DIMS ARE mm

TOLERANCES UNLESS NOTED

0-300	± 1.5	X	± 1.5
300-1500	± 3	X.X	± 1.0
1500-6000	± 6	X.XX	± .40
6000+	± 12	X.XXX	± .100
		ANGLES	± 1°
		SURFACE FINISH	63

THIRD ANGLE PROJECTION

DIMENSIONS (X) ARE REFERENCE

ALL GEOMETRIC DIMENSIONING & TOLERANCING PER ANSI Y14.5-2009

REV	DESCRIPTION	REV'D BY / DATE	APP'D BY / DATE

TITLE
PLC INSTALLATION SAN FRANCISCO

SIZE	DWG No.	REV	SHT	SCALE
D	1049633	0	11 of 20	1:2

DO NOT SCALE

DRAWN BY: P.BRENNAN
DATE: 6/1/2012
CHECKED STANDARDS: P.BRENNAN
CHECKED SERIES: D.HOBBS
WEIGHT TOTAL:
APPROVED BY: D.HOBBS
DATE: 6/1/2012

Robbins

www.TheRobbinsCompany.com

1049633

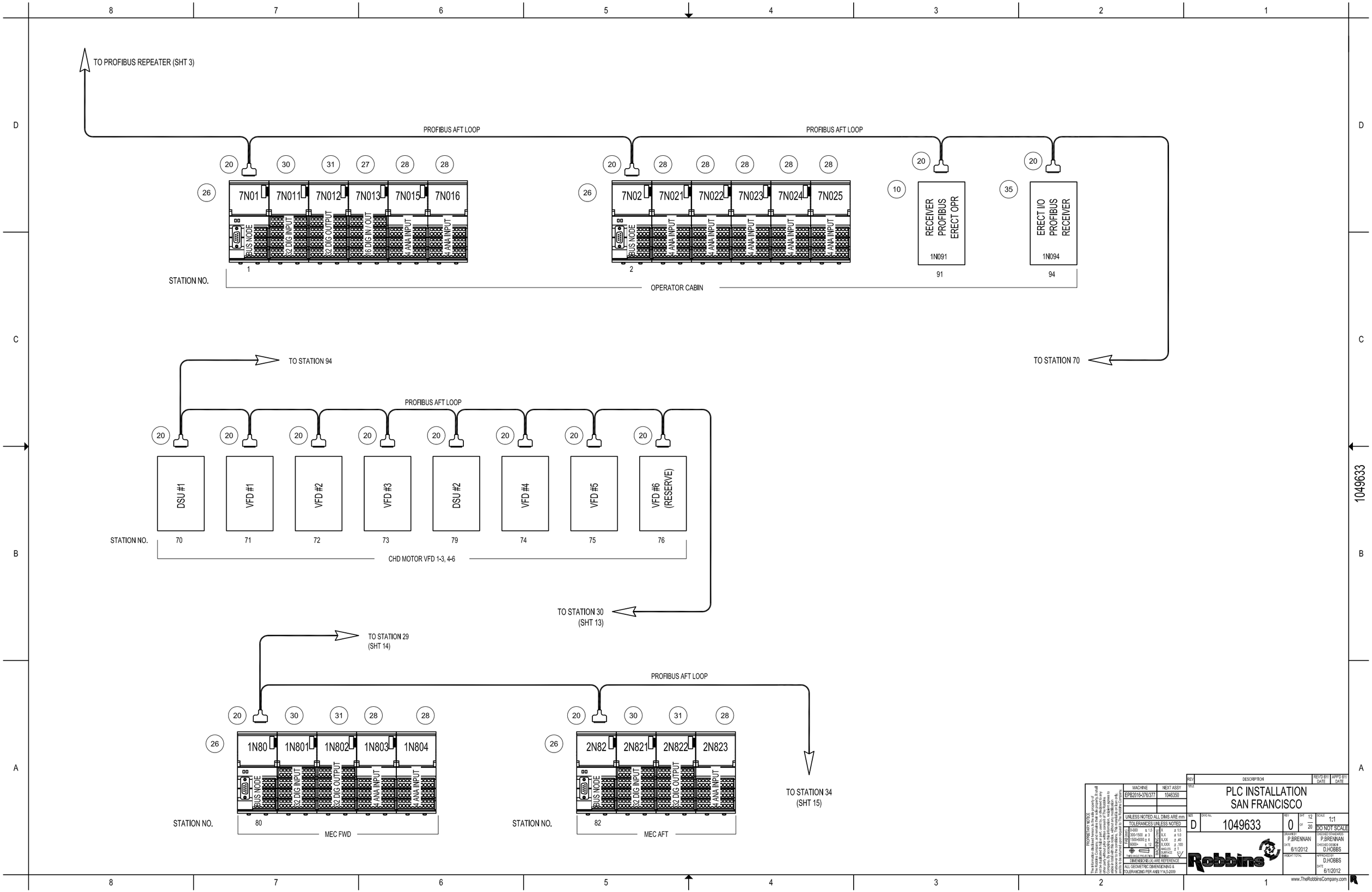

MACHINE	NEXT ASSY
EPB2016-376/377	1046350

UNLESS NOTED ALL DIMS ARE mm

TOLERANCES UNLESS NOTED

0-300	± 1.5	X	± 1.5
300-1500	± 3	X.X	± 1.0
1500-6000	± 6	X.XX	± .40
6000+	± 12	X.XXX	± .100
		ANGLES	± 1
		SURFACE	63

THIRD ANGLE PROJECTION

DIMENSIONS (X) ARE REFERENCE

ALL GEOMETRIC DIMENSIONING & TOLERANCING PER ANSI Y14.5-2009

REV	DESCRIPTION	REV'D BY/ DATE	APP'D BY/ DATE

TITLE: PLC INSTALLATION SAN FRANCISCO

SIZE	DWG No.	REV	SHT	SCALE
D	1049633	0	12 OF 20	1:1 DO NOT SCALE

DRAWN BY: P.BRENNAN DATE: 6/1/2012

CHECKED STANDARDS: P.BRENNAN CHECKED DESIGN: D.HOBBS

WEIGHT TOTAL

APPROVED BY: D.HOBBS DATE: 6/1/2012

Robbins

www.TheRobbinsCompany.com

PROPRIETARY NOTICE
This information disclosed herein is the sole property of The Robbins Company and remains the sole property. It shall not be disclosed in full or part, used by or disclosed to any other party without prior written consent of The Robbins Company. By accepting this information, recipient agrees to abide in the terms of the Robbins agreement and/or other whatsoever to the conditions. This material is on loan only, and is to be returned upon request to The Robbins Company.

1049633

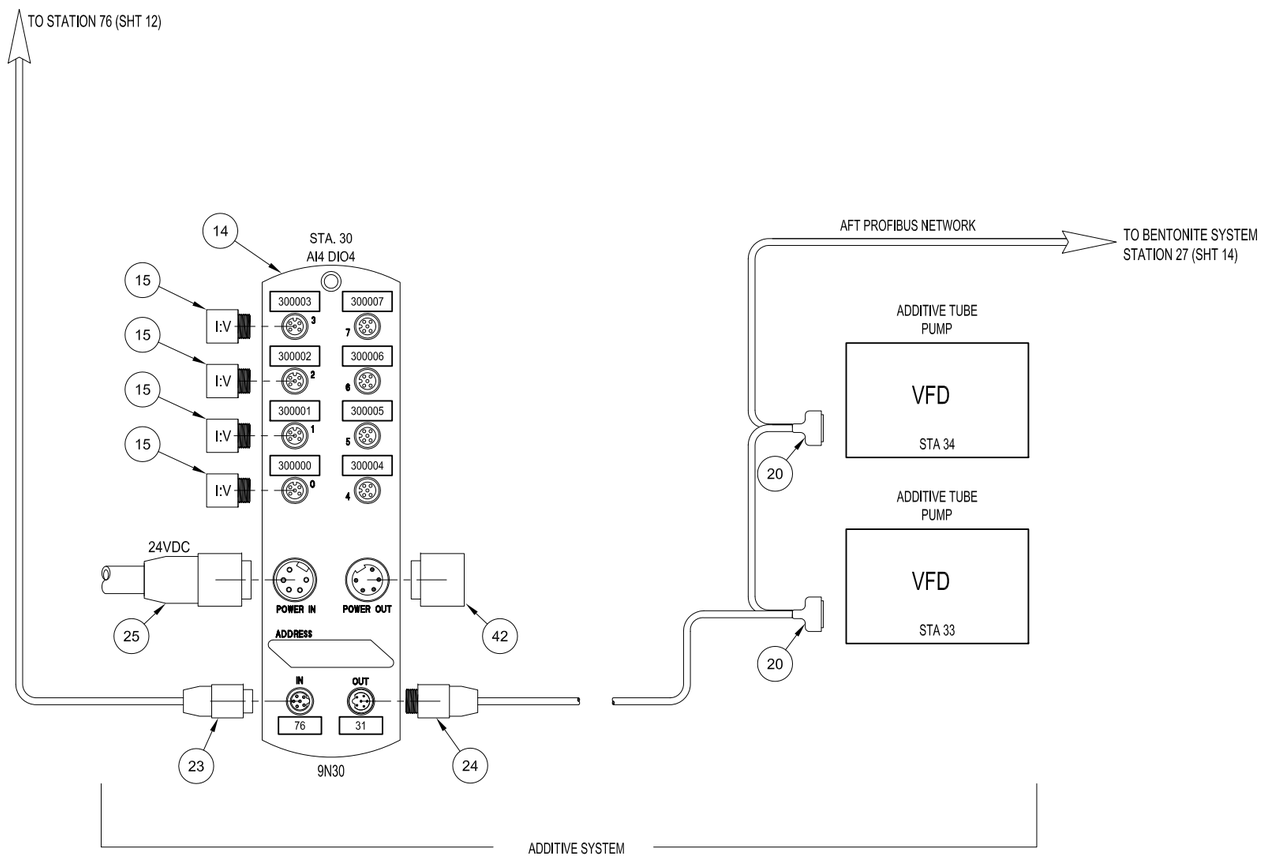

1049633

MACHINE	NEXT ASSY
EPB2016-376/377	1046350

UNLESS NOTED ALL DIMS ARE mm
TOLERANCES UNLESS NOTED

FAB (mm)		MACHINING (mm)	
0-300	± 1.5	X	± 1.5
300-1500	± 3	X.X	± 1.0
1500-6000	± 6	X.XX	± .40
6000+	± 12	X.XXX	± .100
		ANGLES	± 1
		SURFACE	63

THIRD ANGLE PROJECTION

DIMENSIONS (X) ARE REFERENCE
ALL GEOMETRIC DIMENSIONING & TOLERANCING PER ANSI Y14.5-2009

PROPRIETARY NOTICE
The information disclosed herein is the sole property of The Robbins Company and remains the sole property of the Robbins Company. It shall not be disclosed in full or part, used by, or disclosed to any other party without prior written consent of The Robbins Company. By accepting this information, recipient agrees to use it solely with the Robbins Company and in accordance with the terms and conditions. This material is not to be used, whatsoever to the conditions. This material is not to be used, whatsoever to the conditions. This material is not to be used, or reproduced without the prior written consent of The Robbins Company.

REV	DESCRIPTION	REV'D BY/ DATE	APP'D BY/ DATE

TITLE
PLC INSTALLATION SAN FRANCISCO

SIZE	DWG No.	REV	SHT	SCALE
D	1049633	0	13 OF 20	1:2 DO NOT SCALE

DRAWN BY P.BRENNAN DATE 6/1/2012
CHECKED STANDARDS P.BRENNAN CHECKED DESIGN D.HOBBS
WEIGHT TOTAL
APPROVED BY D.HOBBS DATE 6/1/2012

Robbins

www.TheRobbinsCompany.com

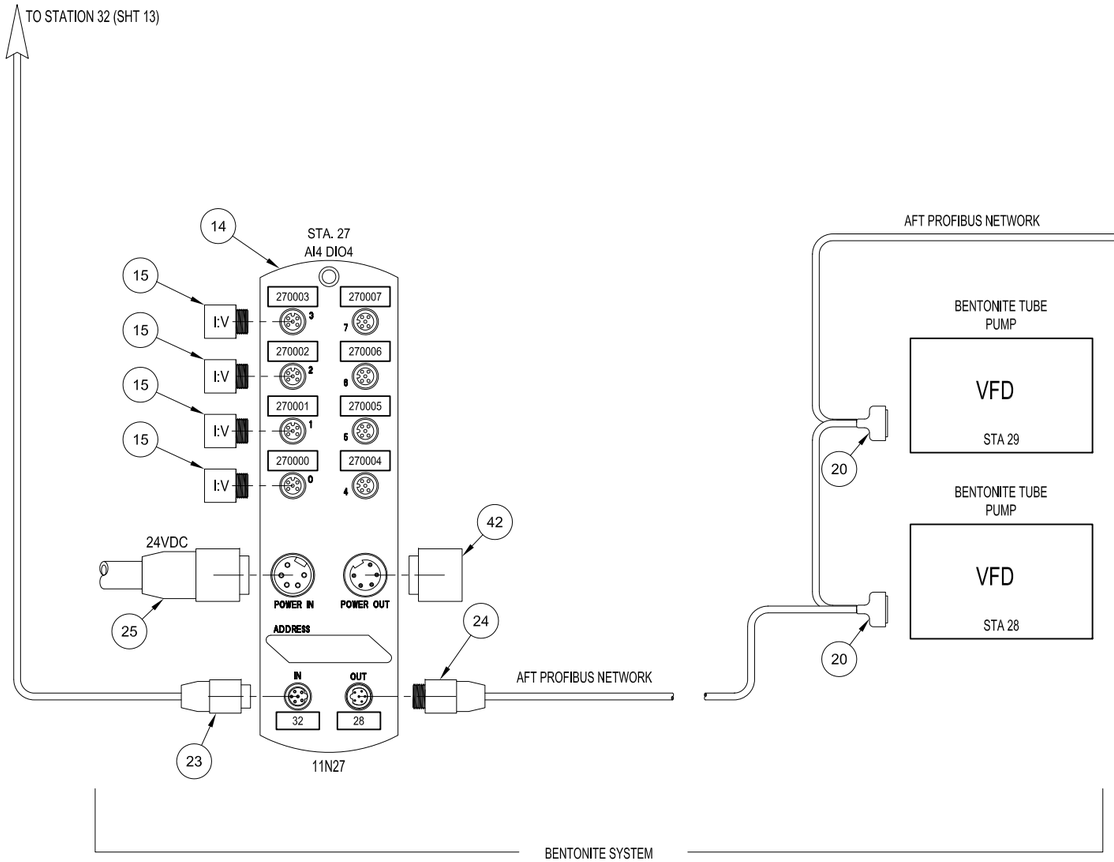

PROPRIETARY NOTICE
The information disclosed hereon is the sole property of The Robbins Company and is submitted on a confidential basis. It shall not be duplicated in full or part, used by, or disclosed to any person, firm or corporation for any purpose except with the written permission of The Robbins Company. By accepting this information, recipient agrees to maintain it in confidence and to use it only for the purpose and in the manner expressly authorized by the conditions. The recipient is on notice that unauthorized use of this information may cause irreparable harm to The Robbins Company for which there is no adequate remedy at law.

MACHINE	NEXT ASSY
EPB2016-378/377	1046350

UNLESS NOTED ALL DIMS ARE mm

TOLERANCES UNLESS NOTED

FRACTIONS	DECIMALS	MACHINING
0-300 ± 1/8	X ± 1.5	
300-1500 ± 3/16	X.X ± 1.0	
1500-6000 ± 1/4	X.XX ± .40	
6000+ ± 1/2	X.XXX ± .100	
	ANGLES ± 1	
THIRD ANGLE PROJECTION	SURFACE 63	
	EDGE	

DIMENSIONS ARE REFERENCE

ALL GEOMETRIC DIMENSIONING & TOLERANCING PER ANSI Y14.5-2009

REV	DESCRIPTION	REV'D BY / DATE	APP'D BY / DATE

TITLE
PLC INSTALLATION SAN FRANCISCO

SIZE	DWG No.	REV	SHT	SCALE
D	1049633	0	14 OF 20	1:2

DO NOT SCALE

DRAWN BY	CHECKED STANDARDS
P.BRENNAN	P.BRENNAN
DATE	CHECKED DESIGN
6/1/2012	D.HOBBS
WEIGHT TOTAL	APPROVED BY
	D.HOBBS
	DATE
	6/1/2012

Robbins

www.TheRobbinsCompany.com

1049633

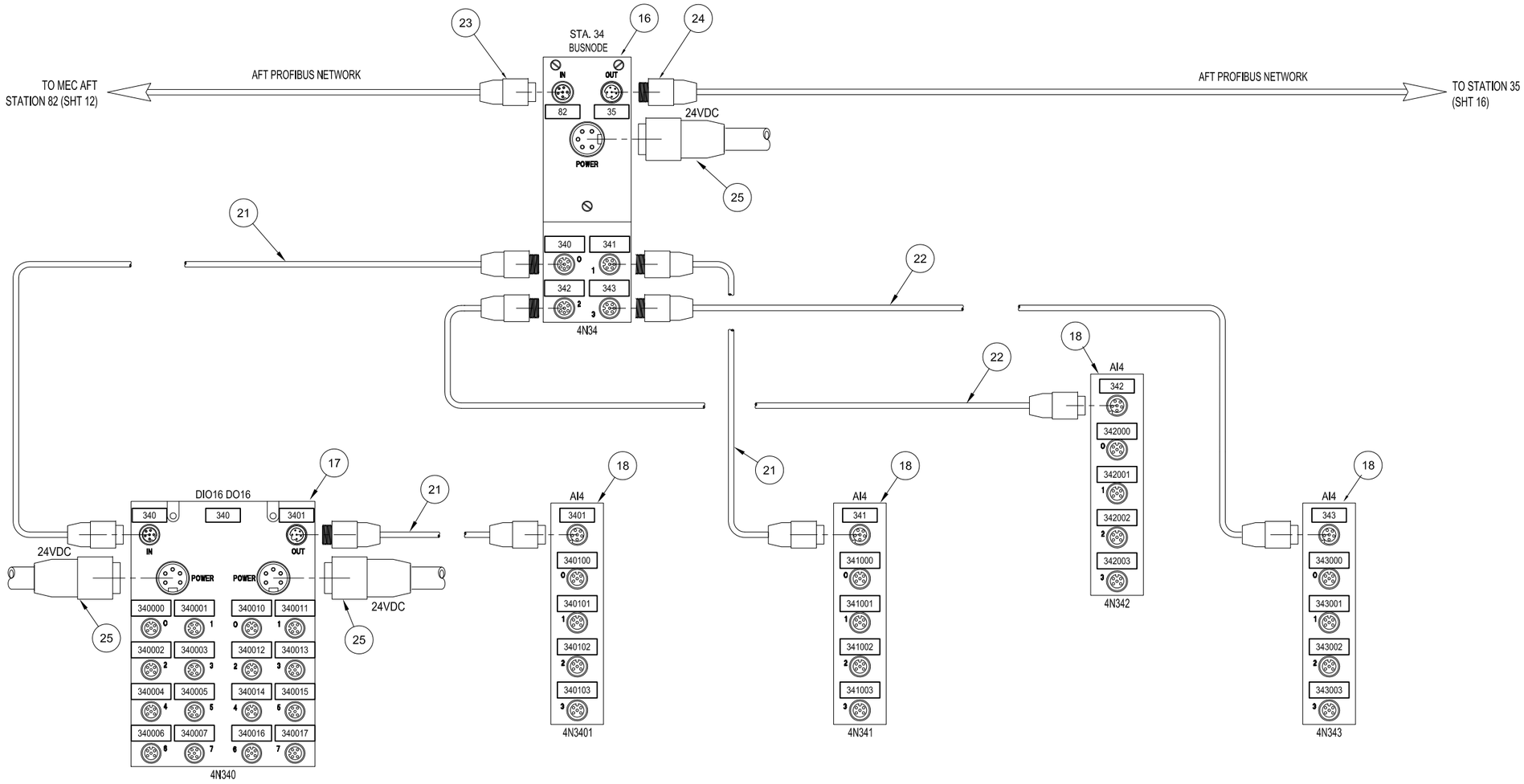

REV	DESCRIPTION	REV'D BY / DATE	APP'D BY / DATE

MACHINE	EPB2016-376/377
NEXT ASSY	1046350
UNLESS NOTED ALL DIMS ARE mm	
TOLERANCES UNLESS NOTED	
FRACTIONS	± 1/8
3 PLACE DECIMAL	X ± 1.5 X.X ± 0.5 X.XX ± .40 X.XXX ± .100 ANGLES ± 1 SURFACE 63 EDGE 125
DIMENSIONS ARE REFERENCE	
ALL GEOMETRIC DIMENSIONING & TOLERANCING PER ANSI Y14.5-2009	

PROPRIETARY NOTICE
The information disclosed hereon is the sole property of The Robbins Company and is not to be disclosed to, or used by, or duplicated in any form, in whole or in part, without the prior written permission of The Robbins Company. By accepting this information, recipient agrees to use the information only for the purpose for which it is furnished and to return it to The Robbins Company upon request. The information is to be held in confidence by the recipient and is not to be disclosed to any unauthorized person.

TITLE
PLC INSTALLATION SAN FRANCISCO

SIZE	DWG No.	REV	SHT	SCALE
D	1049633	0	15 OF 20	1:2

DO NOT SCALE

DRAWN BY	CHECKED STANDARDS
P.BRENNAN	P.BRENNAN
DATE 6/1/2012	CHECKED DESIGN D.HOBBS
WEIGHT TOTAL	APPROVED BY D.HOBBS
	DATE 6/1/2012

Robbins

www.TheRobbinsCompany.com

1049633

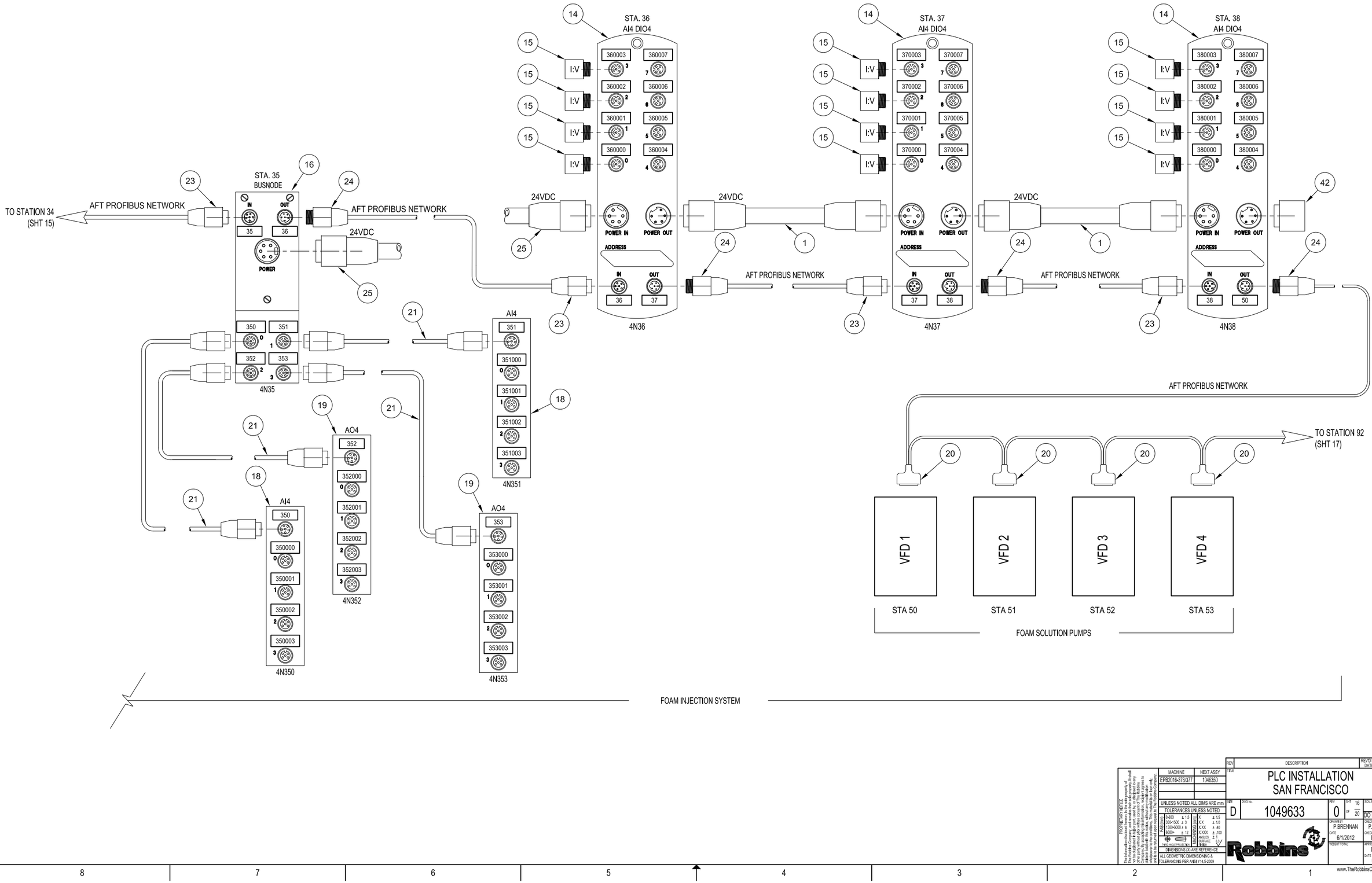

REV	DESCRIPTION	REV'D BY / DATE	APP'D BY / DATE

PROPRIETARY NOTICE
This information disclosed hereon, in the sole property of Robbins Company, is submitted in confidence and shall not be duplicated in full or part, used by, or disclosed to any person, firm or corporation for any purpose other than by Robbins Company. By accepting this information, recipient agrees to the above restrictions and to return it to Robbins Company whenever it is requested and in any event upon completion of the conditions. This material is not to be sold, traded, or given away. Unauthorized use of this material is subject to civil and criminal penalties.

MACHINE	NEXT ASSY
EPB2016-376377	1046350

UNLESS NOTED ALL DIMS ARE mm
TOLERANCES UNLESS NOTED

0-300	± 1.5	X	± 1.5
300-1500	± 3	X.X	± 1.0
1500-6000	± 5	X.XX	± .40
6000+	± 12	X.XXX	± .100
		ANGLES	± 1°
		SURFACE	125

MACHINE FINISH
PAINT (Inside)
UNLESS NOTED
DIMENSIONS (X) ARE REFERENCE
ALL GEOMETRIC DIMENSIONING & TOLERANCING PER ANSI Y14.5-2009

TITLE
PLC INSTALLATION SAN FRANCISCO

SIZE	DWG No.	REV	SHT 16 OF 20	SCALE
D	1049633	0		1:2

DO NOT SCALE

DRAWN BY	CHECKED STD/HDWR
P.BRENNAN	P.BRENNAN
DATE	CHECKED DESIGN
6/1/2012	D.HOBBS
WEIGHT TOTAL	APPROVED BY
	D.HOBBS
	DATE
	6/1/2012

Robbins
www.TheRobbinsCompany.com

1049633

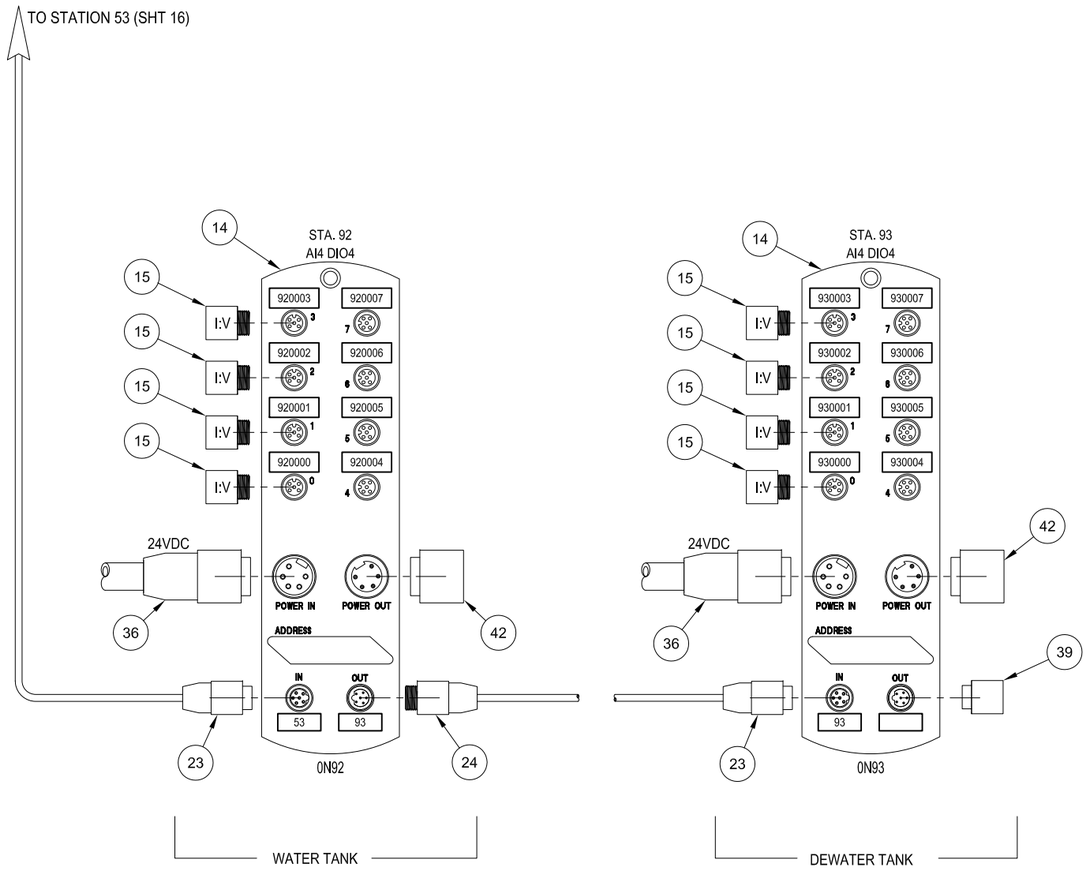

PROPRIETARY NOTICE
The information disclosed hereon is the sole property of Robbins and may not be reproduced in whole or in part, used by, or disclosed to any person or entity without the prior written consent of Robbins. Company, by accepting this information, recipient agrees to use the information solely for the purpose intended by Robbins and to hold the information in confidence in accordance with the conditions. The material is to be returned to Robbins upon request. Robbins makes no warranty as to the accuracy or sufficiency of this information for any purpose.

MACHINE	NEXT ASSY
EPB2016-378/377	1046350
UNLESS NOTED ALL DIMS ARE mm	
TOLERANCES UNLESS NOTED	
0-300 ± 1.5 300-1500 ± 3 1500-6000 ± 6 6000+ ± 12	X ± 1.5 X.X ± 0.5 X.XX ± .40 X.XXX ± .100 ANGLES ± 1 SURFACE 63
THIRD ANGLE PROJECTION	MACHINING 3 mm
DIMENSIONS ARE REFERENCE	
ALL GEOMETRIC DIMENSIONING & TOLERANCING PER ANSI Y14.5-2009	

REV	DESCRIPTION	REV'D BY / DATE	APP'D BY / DATE

TITLE
PLC INSTALLATION SAN FRANCISCO

SIZE	DRWG No.	REV	SHT	OF	SCALE
D	1049633	0	17	20	1:2

DO NOT SCALE

DRAWN BY: P.BRENNAN — 6/1/2012
CHECKED STD/MEMBER: P.BRENNAN
CHECKED DESIGN: D.HOBBS
WEIGHT TOTAL:
APPROVED BY: D.HOBBS — DATE 6/1/2012

Robbins

www.TheRobbinsCompany.com

1049633

OPERATOR CONSOLE -
MASTER - PLC
PROFIBUS MASTER MODULE
(LOCATED IN MASTER PC)

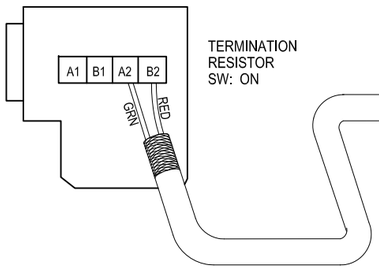

TERMINATION
RESISTOR
SW: ON

PROFIBUS DEDICATED CABLE
SIEMENS 6XV1 830-OJH10 OR EQUIV

PROFIBUS REPEATER

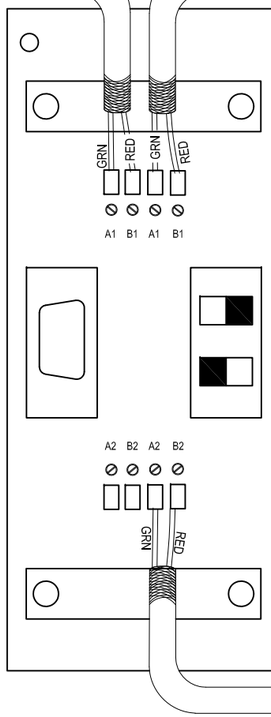

SET "OFF"

SET "ON"

PROFIBUS AFT LOOP

HYDRAULIC PU
STATION 60

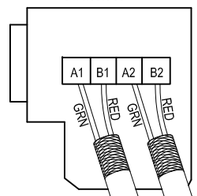

TERMINATION
RESISTOR
SW: OFF

PROFIBUS FORWARD LOOP

OPERATOR CABIN
32 DIG IN MODULE,
STATION 1

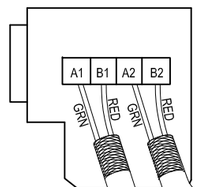

TERMINATION
RESISTOR
SW: OFF

HYDRAULIC PU
STATION 61

WEIGH SCALES
STATION 13, 14

SCREW DRIVE
STATION 21

TAIL SHIELD
STATION 22

MID-SHIELD
STATION 40, 42, 44, 46

TBM CABINET
STATION 20

LOWER & UPPER THRUST
STATION 11, 03, 12, 04

RIGHT CHD SUPPORT
STATION 48

TERMINATION
RESISTOR SW:
OFF

LEFT CHD SUPPORT
STATION 49

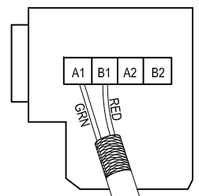

TERMINATION
RESISTOR
SW: ON

PROFIBUS FORWARD LOOP

OPERATOR CABIN
STATION 2
STATION 91, 94

CHD MOTOR VFD
STATION 70-75 & 79

ADDITIVE SYSTEM
STATION 30 & 31-32

BENTONITE SYSTEM
STATION 27 & 28-29

MEC FWD
STATION 80

MEC AFT
STATION 82

FOAM SYSTEM
STATION 34-35 & 50-53

WATER TANK
STATION 92

TERMINATION
RESISTOR SW:
OFF

DE-WATER TANK
STA. 93
AI4 DIO4

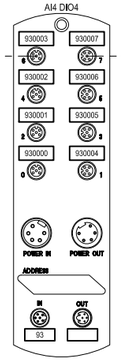

PROFIBUS AFT LOOP

TERMINATION PLUG

PROPRIETARY NOTICE
The information disclosed hereon is the sole property of The Robbins Company and is considered proprietary. It shall not be duplicated in full or part, used by, or disclosed to any person, firm or corporation for any purpose except as The Robbins Company may specifically authorize in writing. By accepting this information, recipient agrees to abide by the foregoing restrictions and to return all copies upon request. The restrictions in this notice shall be binding on the recipient and its successors and assigns.

MACHINE	NEXT ASSY
EPB2016-378/377	1046350

UNLESS NOTED ALL DIMS ARE mm

TOLERANCES UNLESS NOTED

FRACTIONS	DECIMALS	ANGLES
0-300 ± 1/2	X ± 1.0	± 1°
300-1500 ± 1/4	X.X ± 0.5	
1500-6000 ± 1/8	X.XX ± .02	
6000+ ± 1/16	X.XXX ± .010	

THIRD ANGLE PROJECTION

DIMENSIONS IN ARE REFERENCE

ALL GEOMETRIC DIMENSIONING & TOLERANCING PER ANSI Y14.5-2009

REV	DESCRIPTION	REV'D BY / DATE	APP'D BY / DATE

TITLE
PLC INSTALLATION SAN FRANCISCO

SIZE	DWG No.	REV	SHT	SCALE
D	1049633	0	18 OF 20	1:2

DO NOT SCALE

DRAWN BY: P.BRENNAN
DATE: 6/1/2012

CHECKED STANDARDS: P.BRENNAN
CHECKED DESIGN: D.HOBBS

WEIGHT TOTAL:

APPROVED BY: D.HOBBS
DATE: 6/1/2012

Robbins

www.TheRobbinsCompany.com

1049633

Layout of the Repeater	No.	Function
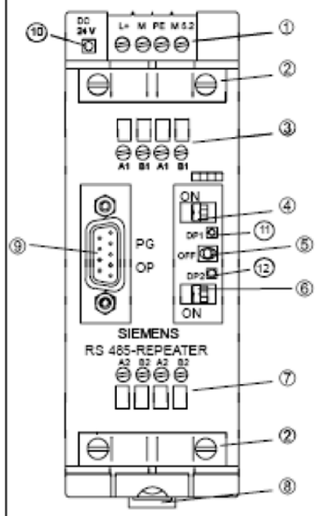	①	Terminal for connecting the power supply of the RS 485 repeater (pin "M5.2" is the reference ground if you want to measure the voltage between terminals "A2" and "B2").
	②	Shield clamp for strain relief and grounding the LAN cable of bus segment 1 or bus segment 2
	③	Terminal for the LAN cable of bus segment 1
	④	Terminating resistor for bus segment 1)[1]
	⑤	Switch for OFF state (= Disconnect bus segments 1 and 2, for example, during commissioning)
	⑥	Terminating resistor for bus segment 2)[1]
	⑦	Terminal for the LAN cable of bus segment 2
	⑧	Catch for mounting and removing the RS-485 repeater on a standard rail
	⑨	Interface for PG/OP on bus segment 1
	⑩	LED 24 V power supply
	⑪	LED indicating bus activity on segment 1
	⑫	LED indicating bus activity on segment 2

Segments 1 and 2 Terminated

Figure 5-3 shows how to connect the RS-485 repeater to the ends between two segments:

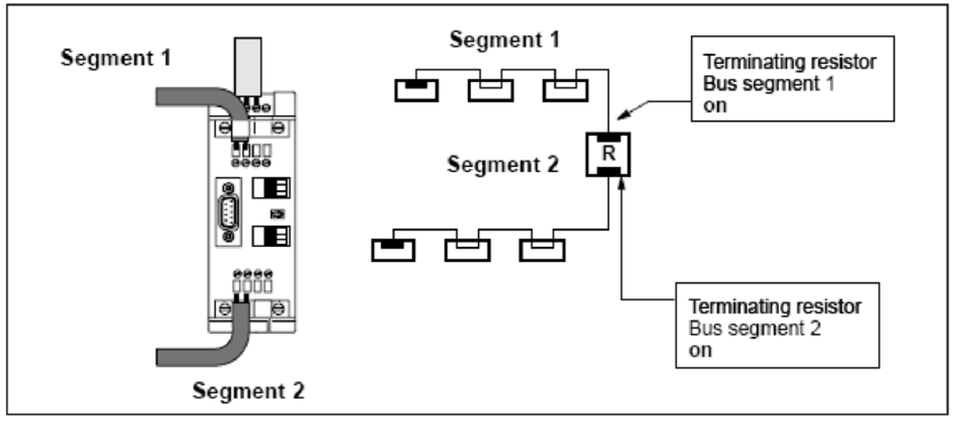

Segment 1 Terminated, Segment 2 Connected Through

Figure 5-4 shows the connection between two segments via an RS-485 repeater with one segment connected through:

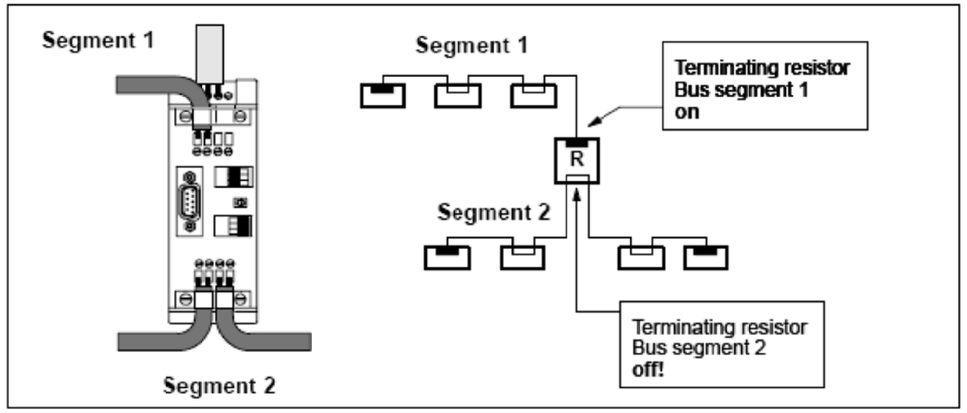

Segments 1 and 2 Connected Through

Figure 5-5 shows the connection between two segments via an RS-485 repeater with each LAN cable connected through:

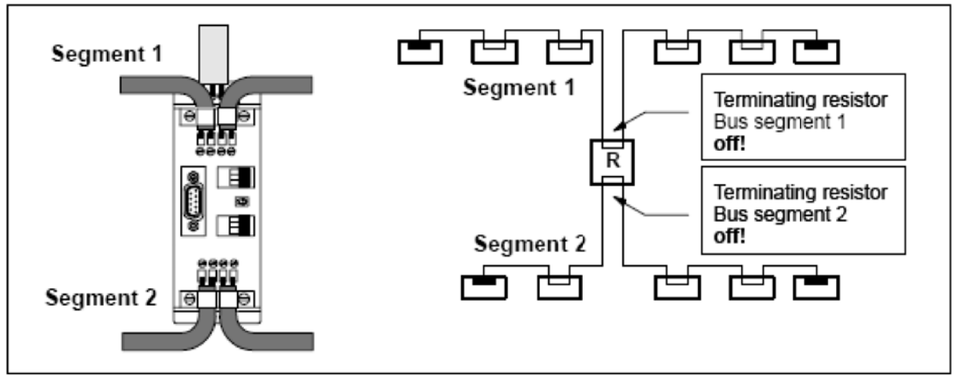

SIEMENS PROFIBUS REPEATER VENDOR INFORMATION

PROPRIETARY NOTICE
This information disclosed hereon is the sole property of Robbins Company and is not to be used, reproduced, or built on the equipment in full or part, used by, or disclosed to any person, firm or corporation for any purpose other than that for which it is furnished by Robbins Company. By accepting this information, recipient agrees to hold it in confidence and to return it to Robbins Company whenever so requested. Use of this information is subject to the conditions. The material is on loan only, and shall be returned to Robbins Company upon request.

MACHINE	NEXT ASSY
EPB2016-376/377	1046350

UNLESS NOTED ALL DIMS ARE mm
TOLERANCES UNLESS NOTED
FRACTIONS ± 1/64
0-300 ± 1.5
300-1500 ± 3
1500-6000 ± 6
6000+ ± 12
MACHINING (cont'd)
X ± .5
X.X ± .10
X.XX ± .40
X.XXX ± .100
ANGLES ± 1
SURFACE √
FINISH
HIGHLIGHT PROJECTION
DIMENSIONS (X) ARE REFERENCE
ALL GEOMETRIC DIMENSIONING & TOLERANCING PER ANSI Y14.5-2009

REV	DESCRIPTION	REV'D BY / DATE	APP'D BY / DATE

TITLE: PLC INSTALLATION SAN FRANCISCO

SIZE: D | DWG NO.: 1049633 | REV: 0 | SHT: 19 OF 20 | SCALE: 1:5 | DO NOT SCALE

DRAWN: P.BRENNAN 6/1/2012
CHECKED STD/HDWDS: P.BRENNAN
CHECKED DESIGN: D.HOBBS
APPROVED BY: D.HOBBS 6/1/2012
WEIGHT TOTAL:

Robbins
www.TheRobbinsCompany.com

1049633

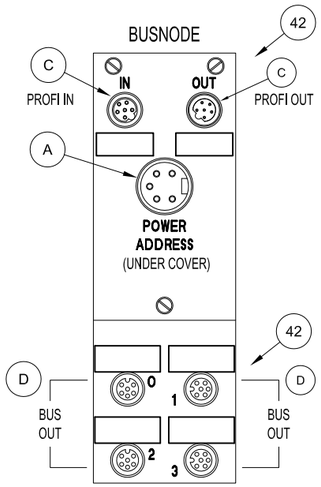

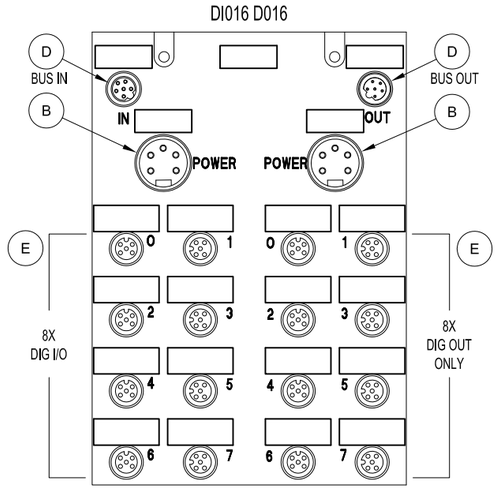

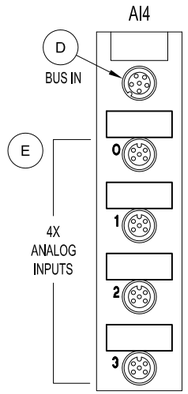

PIN 1: OV
PIN 2: OV
PIN 3: PE
PIN 4: +24V SENSOR
PIN 5: +24V ACTUATOR

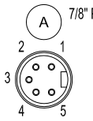

PIN 1: OV
PIN 2: OV
PIN 3: PE
PIN 4: +24V ACT (LEFT)
PIN 5: +24V ACT (RIGHT)

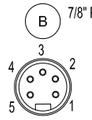

PIN 1: N/C
PIN 2: "A" GREEN
PIN 3: N/C
PIN 4: "B" RED
PIN 5: N/C

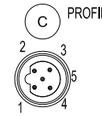

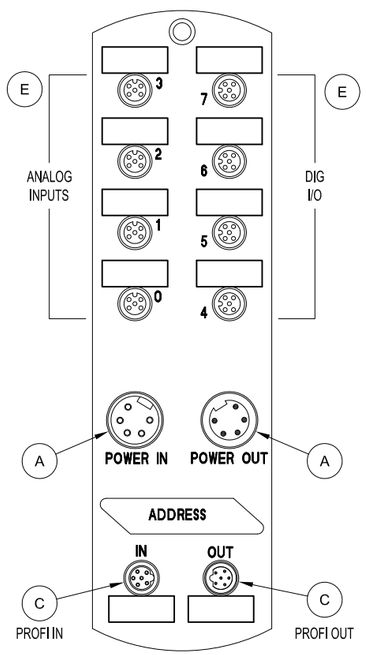

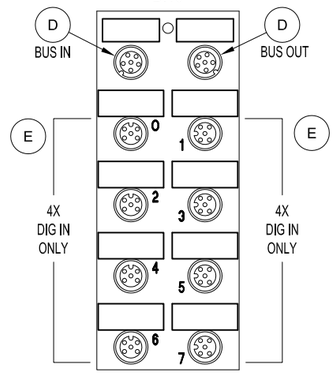

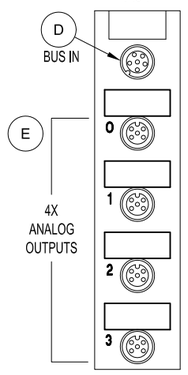

PIN 1: +24V ACTUATOR
PIN 2: +24V SENSOR
PIN 3: OV
PIN 4: BUS DATA
PIN 5: BUS DATA
PIN 6: OV

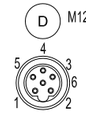

	DIG IN	DIG OUT	ANA IN	ANA OUT
PIN 1:	+24V/0.2A	+24V/1.6A	+24V/0.2A	+24V/1.6A
PIN 2:	IN CH2	OUT CH2	IN	N/C
PIN 3:	OV	OV	OV	OV
PIN 4:	IN CH1	OUT CH1	OV	OUT
PIN 5:	PE	PE	PE	PE

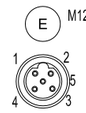

MURR CUBE67 MODULE CONNECTOR DETAILS

PROPRIETARY NOTICE
This information disclosed hereon is the sole property of The Robbins Company and may not be copied in whole or part, used by, or disclosed to any person in whole or part without the written consent of The Robbins Company. By accepting this information, recipient agrees to use the information solely for the purpose authorized by The Robbins Company and to return this material upon request. The material is for illustrative purposes only and is not to be relied upon as a complete design. Specific applications should be reviewed for adequacy by the user.

MACHINE	NEXT ASSY
EPB2016-376/377	1046350

UNLESS NOTED ALL DIMS ARE mm
TOLERANCES UNLESS NOTED

0-300	± 1.5	X	± 1.0
300-1500	± 3	XX	± 1.0
1500-6000	± 6	XXX	± .40
6000+	± 12	XXXX	± .100
		ANGLES	± 1
		SURFACE FINISH	

THIRD ANGLE PROJECTION
DIMENSIONS (X) ARE REFERENCE
ALL GEOMETRIC DIMENSIONING & TOLERANCING PER ANSI Y14.5-2009

REV	DESCRIPTION	REV'D BY / DATE	APP'D BY / DATE

TITLE: PLC INSTALLATION SAN FRANCISCO

SIZE	DWG No.	REV	SHT	OF	SCALE
D	1049633	0	20	20	1:2

DO NOT SCALE

DRAWN BY	P.BRENNAN
DATE	6/1/2012
CHECKED STANDARDS	P.BRENNAN
CHECKED DESIGN	D.HOBBS
WEIGHT TOTAL	
APPROVED BY	D.HOBBS
DATE	6/1/2012

Robbins
www.TheRobbinsCompany.com

1049633

QTY	PART No.	DESCRIPTION	DWG No.	Component/Vendor ID	ITEM
2	700	1045605-2	50 X 3C + 10 X 3C VFD			1
2	400	1045562-13	CABLE, 185 X 1C, 448A			2
2	450	1045562-9	CABLE, 70 X 4C, 207A			3
2	250	1045562-7	CABLE, 35 X 4C, 135A			4
2	200	1045562-5	CABLE, 16 X 4C, 82A			5
2	250	1045562-4	CABLE, 10 X 4C, 61A			6
2	1000	1045562-2	CABLE, 4 X 4C, 34A			7
2	300	1045562-1	CABLE, 1.5 X 4C, 18A			8
2	1500	1026902	CABLE, 2.5 X 3C, 20A	1026889		9
2	750	1026898	CABLE, 1.5 X 3C	1026889		10
2	200	1026900	CABLE, 1.5 X 12C	1026889		11
2	200	1026901	CABLE, 1.5 X 25C	1026889		12
2	500	1026903	CABLE, 2.5 X 5C	1026889		13
2	250	1026904	CABLE, 2.5 X 12C	1026889		14
2	2000	1026890	CABLE, 0.5 X 3C SH	1026889		15
2	1000	1026891	CABLE, 0.5 X 7C SH	1026889		16
2	250	1026892	CABLE, 0.5 X 12C SH	1026889		17
2	150	A99020-2	CABLE, PROFIBUS NETWORK, FLEX			18
	6	D71683-26	BOX, JUNCTION 16 X 14 X 6			19
	6	D71683-15	PANEL, 14.75 X 12.9			20
	400	1029672	TERMINAL BLOCK, BLUE	1029720		21
	50	1029673	GROUND BLOCK	1029720		22
	20	1029674	END SECTION, BLUE	1029720		23
	20	1029677	END STOP	1029720		24
	10	1029676	JUMPER, 10 POLE	1029720		25
	4	1029682	MARKER, TB CARD 100-COUNT	102720		26
	2	1029679	DIN RAIL, 2M	1029720		27
8	90	B115624-12	CORD GRIP 20.6-24mm, ALUM			28
	10	A78250-12	CORD GRIP 48-56mm			29
	16	A78250-11	CORD GRIP 41-48mm			30
	10	A78250-9	CORD GRIP 30-35mm			31
	16	A78250-8	CORD GRIP 25-30mm			32
	14	A78250-7	CORD GRIP 22-25mm			33
	22	A78250-6	CORD GRIP 19-22mm			34
	40	A78250-4	CORD GRIP 13-16mm			35
	200	A78250-2	CORD GRIP 6.3-9.6mm			36
2	125	A99020-1	CABLE, PROFIBUS, SOLID CORE			37
	2	A97179-7	ETHERNET PATCH CABLE, 150 FT			38

NOTES:

1. CONTENTS:

   SHT 2: 3 PHASE POWER CABLES.
   SHT 3: INTER-CABINET CABLE ARRANGEMENT.
   SHT 4-15: FIELD DEVICE WIRING DETAILS.
   SHT 16: LIGHTING AND ESTOP WIRING DETAILS.

2 QTYS SHOWN ARE IN METERS.

3. MARK BOTH ENDS OF EACH CONTROL CABLE PER THIS DRAWING.

4. MARK ALL CONDUCTORS WITH WIRE ID, E.G. "6551".

5. INSTALL CABLE GLANDS AT ENCLOSURE ENTRY.

6. DO NOT MIX AC AND DC SIGNALS IN SAME CABLE.

7. REFER TO PLC INSTALLATION DWG FOR PROFIBUS CABLING.

8 CORD GRIP MATERIAL MUST BE ALUMINUM FOR SINGLE CONDUCTOR CABLE

SHT	REV
17	0
16	0
15	0
14	0
13	0
12	0
11	0
10	0
9	0
8	0
7	0
6	0
5	0
4	0
3	0
2	0
1	0

PROPRIETARY NOTICE
The information disclosed hereon is the sole property of Robbins & Myers Energy Systems L.P. and shall not be duplicated in full or part, used by, or disclosed to any person, firm or corporation for any purpose whatsoever. By accepting this information, recipient agrees to not duplicate in full or part, use by, or disclose to any unauthorized to the conditions. The material is to be returned upon request. Any reproduction of this drawing in whole or in part without written permission is prohibited.

MACHINE	NEXT ASSY
EPB2016-378/377	1046350

UNLESS NOTED ALL DIMS ARE mm
TOLERANCES UNLESS NOTED
FRACTIONS ± 1/64
0-300 ± 1.0
300-1500 ± .3
1500-6000 ± .6
6000+ ± 1.0
THIRD ANGLE PROJECTION
DIMENSIONS ARE REFERENCE
ALL GEOMETRIC DIMENSIONING & TOLERANCING PER ANSI Y14.5-2009
MACHINING ± mm
X ± 1.0
X.X ± 0.5
X.XX ± .40
X.XXX ± .100
ANGLES ± 1
SURFACE 6.3
DRILL

REV	DESCRIPTION	REV'D BY / DATE	APP'D BY / DATE

TITLE: ELECTRICAL SYSTEM CABLING
SAN FRANCISCO

SIZE	DRG No.	REV	SHT	OF	SCALE
D	1050374	0	1	17	1:1

DO NOT SCALE

DRAWN BY	CHECKED STD/MFGR
P.BRENNAN	P.BRENNAN
DATE 6/25/2012	CHECKED DESIGN D.HOBBS
WEIGHT TOTAL	APPROVED BY D.HOBBS
	DATE 6/25/2012

Robbins

www.TheRobbinsCompany.com

1050374

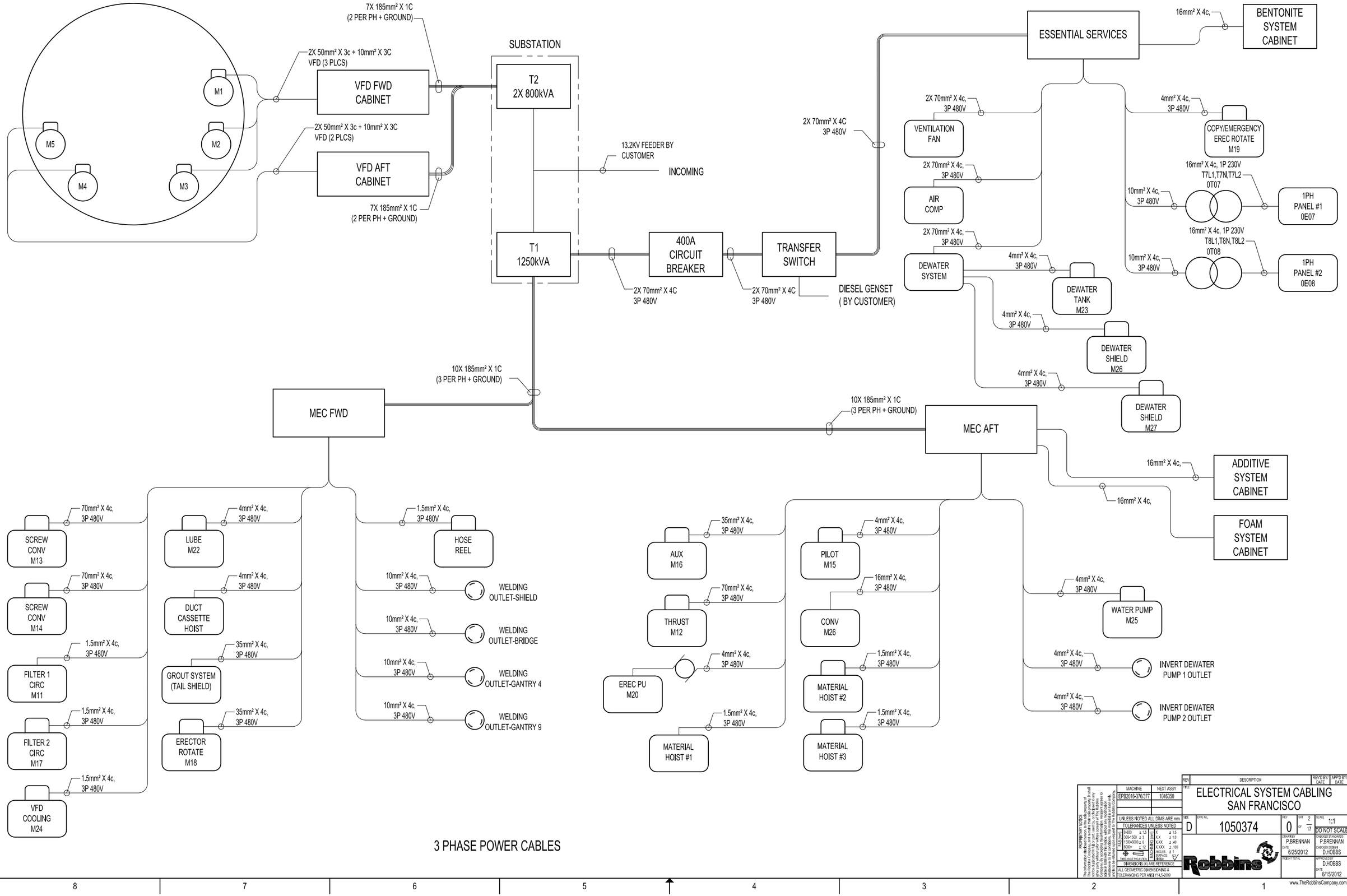

3 PHASE POWER CABLES

PROPRIETARY NOTICE
The information disclosed hereon is the sole property of Robbins and is furnished in confidence. It shall not be duplicated in full or part, used by, or disclosed to any person, firm or corporation for any purpose except as authorized by the Robbins Company. By accepting this information, recipient agrees to return it upon request and not to reproduce, copy, lend or otherwise dispose of it without the prior written consent of Robbins. This material is not to be used in any manufacturing operation unless specifically authorized in writing by Robbins.

MACHINE	NEXT ASSY
EPB2016-376/377	1046350

UNLESS NOTED ALL DIMS ARE mm

TOLERANCES UNLESS NOTED

FRACTIONS	DECIMALS	ANGULAR
0-300 ± 1/8	X.X ± 5	± 1.5
300-1500 ± 3	X.XX ± 10	± 5.0
1500-6000 ± 6	X.XXX ± 40	± .40
6000+ ± 12	X.XXXX ± 100	± .100
	ANGLES ± 1	
	SURFACE 63	
	EMBo	

DIMENSIONS (X) ARE REFERENCE.

ALL GEOMETRIC DIMENSIONING & TOLERANCING PER ANSI Y14.5-2009

REV	DESCRIPTION	REV'D BY / DATE	APP'D BY / DATE

TITLE: ELECTRICAL SYSTEM CABLING SAN FRANCISCO

SIZE	DWG No.	REV	SHT	SCALE
D	1050374	0	2 of 17	1:1

DO NOT SCALE

DRAWN BY: P.BRENNAN — DATE: 6/25/2012
CHECKED ENGINEER: P.BRENNAN
CHECKED DESIGN: D.HOBBS
WEIGHT / TOTAL:
APPROVED BY: D.HOBBS — DATE: 6/15/2012

Robbins

www.TheRobbinsCompany.com

1050374

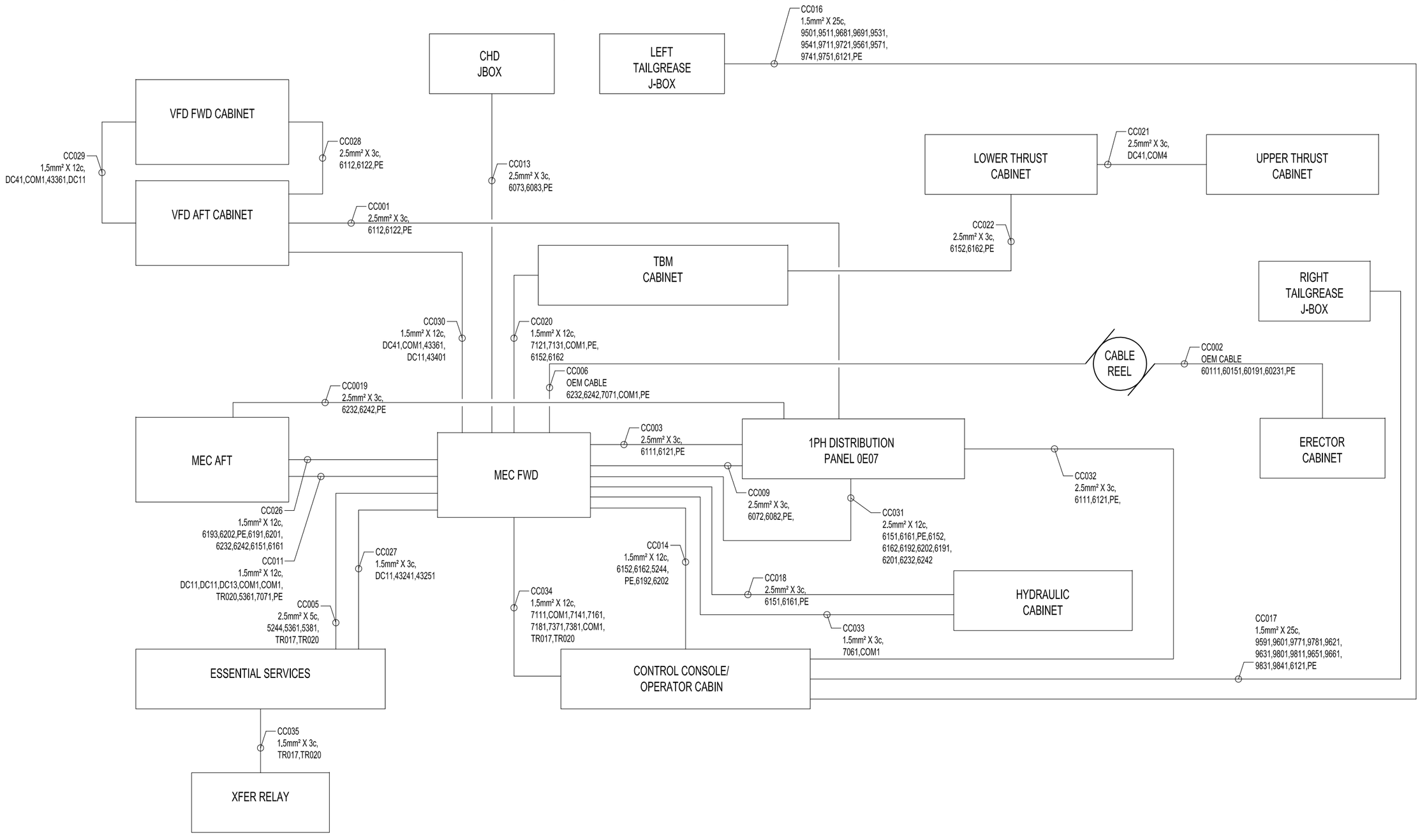

INTERCONNECTION CABLES

PROPRIETARY NOTICE
This information disclosed hereon is the sole property of Robbins and may not be copied or used in whole or in part and may not be disclosed to any third party without the written permission of Robbins. By accepting this information, recipient agrees to use the information solely for the purpose authorized by Robbins and to return this material upon request and agrees that neither this material nor its contents will be used in any manner detrimental to the interests of Robbins.

MACHINE	NEXT ASSY
EPB2016-376377	1046350

UNLESS NOTED ALL DIMS ARE mm
TOLERANCES UNLESS NOTED
FRACTIONS: 0-300 ± 1/8, 300-1500 ± 1/4, 1500-6000 ± 1/2, 6000+ ± 1/2
MACHINING: X ± 1.5, X.X ± 1.0, X.XX ± .40, X.XXX ± .100, ANGLES ± 1°, SURFACE 125
UNLESS INDICATED DIMENSIONS (X) ARE REFERENCE
ALL GEOMETRIC DIMENSIONING & TOLERANCING PER ANSI Y14.5-2009

REV	DESCRIPTION	REV'D BY / DATE	APP'D BY / DATE
0			

TITLE: ELECTRICAL SYSTEM CABLING SAN FRANCISCO

SIZE: D | DWG No.: 1050374 | REV: 0 | SHT: 3 OF 17 | SCALE: 1:1 | DO NOT SCALE

DRAWN BY: P.BRENNAN | DATE: 6/25/2012
CHECKED STANDARD: P.BRENNAN
CHECKED DESIGN: D.HOBBS
WEIGHT TOTAL:
APPROVED BY: D.HOBBS | DATE: 6/25/2012

Robbins
www.TheRobbinsCompany.com

1050374

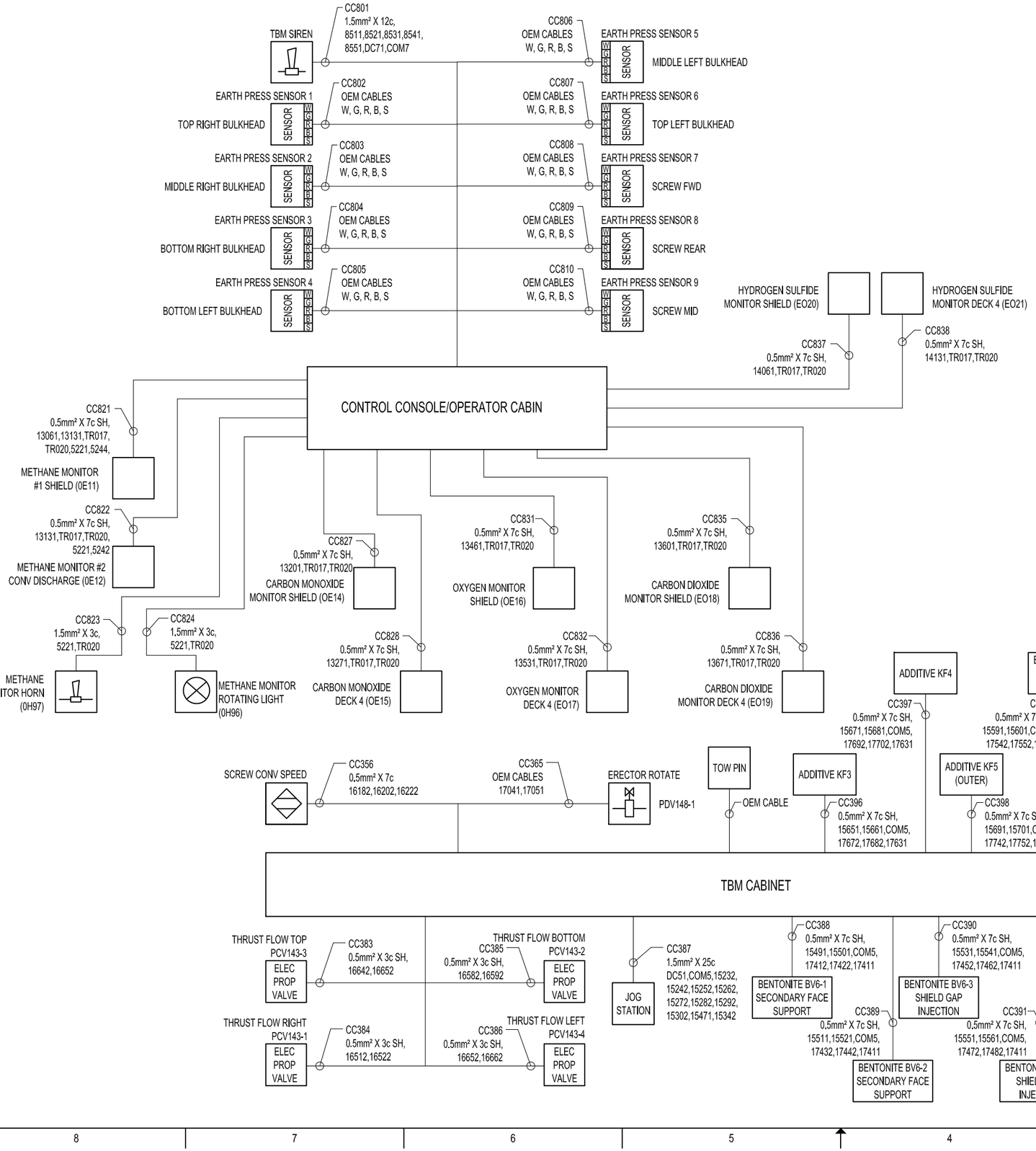

PROPRIETARY NOTICE
The information disclosed hereon is the sole property of Robbins. This drawing is submitted on a confidential basis and shall not be duplicated in full or part, used by, or disclosed to any person, firm or corporation for any purpose except as agreed to by the Company. By accepting this information, recipient agrees to maintain it in confidence and to use it only for purposes authorized by the contract. The material is to be returned upon request. Any reproduction of this drawing must contain this notice.

MACHINE	NEXT ASSY
EPB2016-378/377	1046350

UNLESS NOTED ALL DIMS ARE mm

TOLERANCES UNLESS NOTED

FRACTIONS	DECIMALS	ANGULAR
0-300 ± 1/8	X.X ± 1.0	ANGLES ± 1°
300-1500 ± 3/16	X.XX ± .50	SURFACE 63
1500-6000 ± 1/4	X.XXX ± .100	UNless V
6000+ ± 1/2		

THIRD ANGLE PROJECTION

DIMENSIONS ARE REFERENCE

ALL GEOMETRIC DIMENSIONING & TOLERANCING PER ANSI Y14.5-2009

REV	DESCRIPTION	REV'D BY / DATE	APP'D BY / DATE

TITLE: ELECTRICAL SYSTEM CABLING SAN FRANCISCO

SIZE: D | DWG No.: 1050374 | REV: 0 | SHT 4 OF 17 | SCALE: 1:1

DO NOT SCALE

DRAWN BY: P.BRENNAN DATE: 6/25/2012

CHECKED SYSTEM/DOM: P.BRENNAN

CHECKED DESIGN: D.HOBBS

WEIGHT: TOTAL

APPROVED BY: D.HOBBS DATE: 6/25/2012

Robbins

www.TheRobbinsCompany.com

1050374

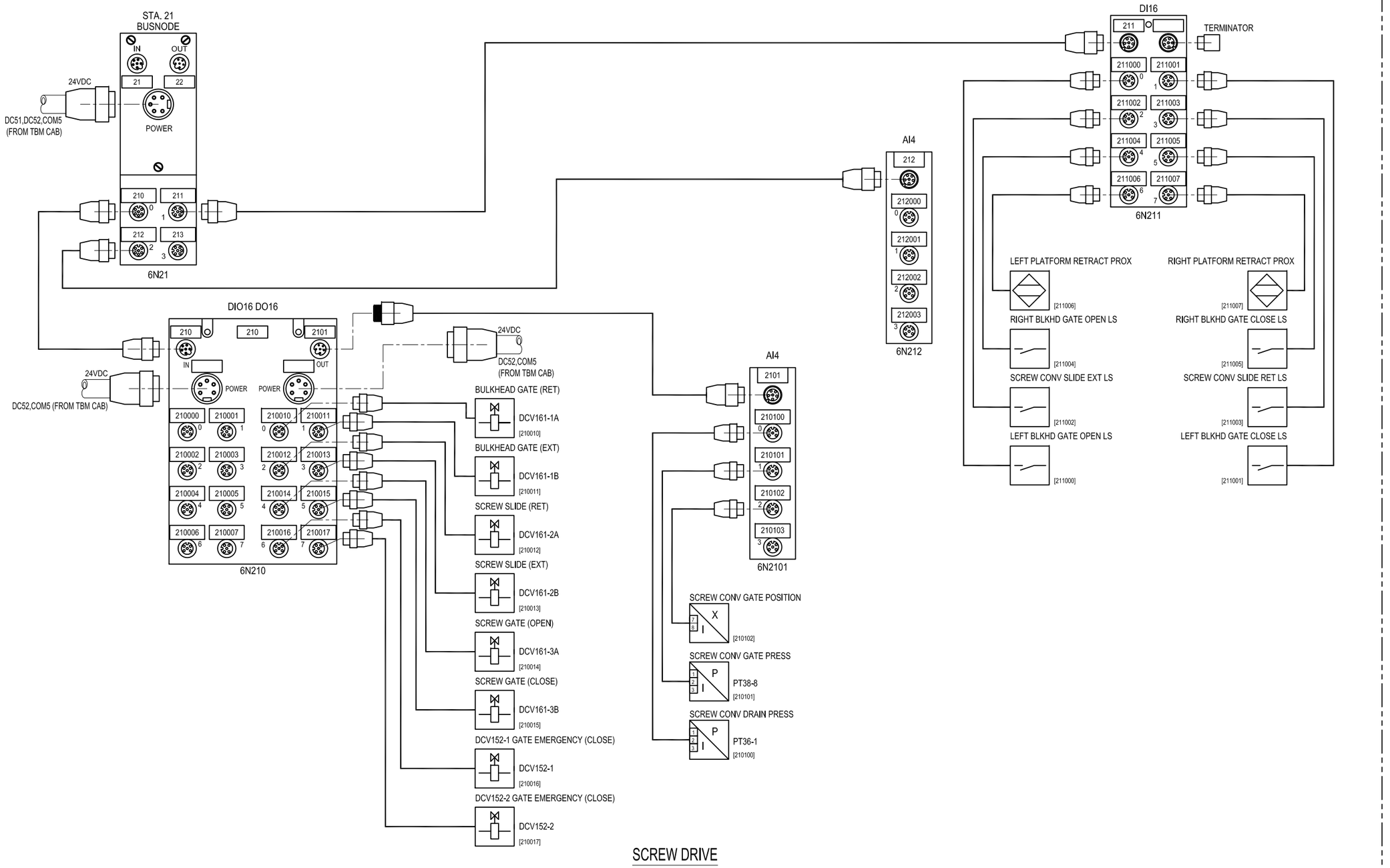

SCREW DRIVE

SEE ELEC SCHEMATIC 1046646 FOR CONNECTOR PIN-OUT

1050374

REV	DESCRIPTION	REV'D BY/ DATE	APP'D BY/ DATE

TITLE: ELECTRICAL SYSTEM CABLING SAN FRANCISCO

MACHINE	NEXT ASSY
EPB2016-376/377	1046350

UNLESS NOTED ALL DIMS ARE mm

TOLERANCES UNLESS NOTED

0-300	± 1.5	X	± 1.5
300-1500	± 3	X.X	± 1.0
1500-6000	± 6	X.XX	± .40
6000+	± 12	X.XXX	± .100
		ANGLES	± 1
		SURFACE	63
		TIMBER	

THIRD ANGLE PROJECTION

DIMENSIONS (X) ARE REFERENCE

ALL GEOMETRIC DIMENSIONING & TOLERANCING PER ANSI Y14.5-2009

SIZE	DWG No.	REV	SHT	SCALE
D	1050374	0	5 OF 17	1:1 DO NOT SCALE

DRAWN BY: P.BRENNAN DATE: 6/25/2012

CHECKED STANDARDS: P.BRENNAN CHECKED DESIGN: D.HOBBS

WEIGHT TOTAL

APPROVED BY: D.HOBBS DATE: 6/25/2012

Robbins

www.TheRobbinsCompany.com

PROPRIETARY NOTICE
The information disclosed hereon is the sole property of The Robbins Company and remains the sole property. It shall not be duplicated in full or part, used by or disclosed to any other party without prior written consent of The Robbins Company. By accepting this information, recipient agrees to make it available to its employees and to those who have a need to know, whatever to the condition. This material is not to be used, copied or reproduced in any form without the written consent of The Robbins Company.

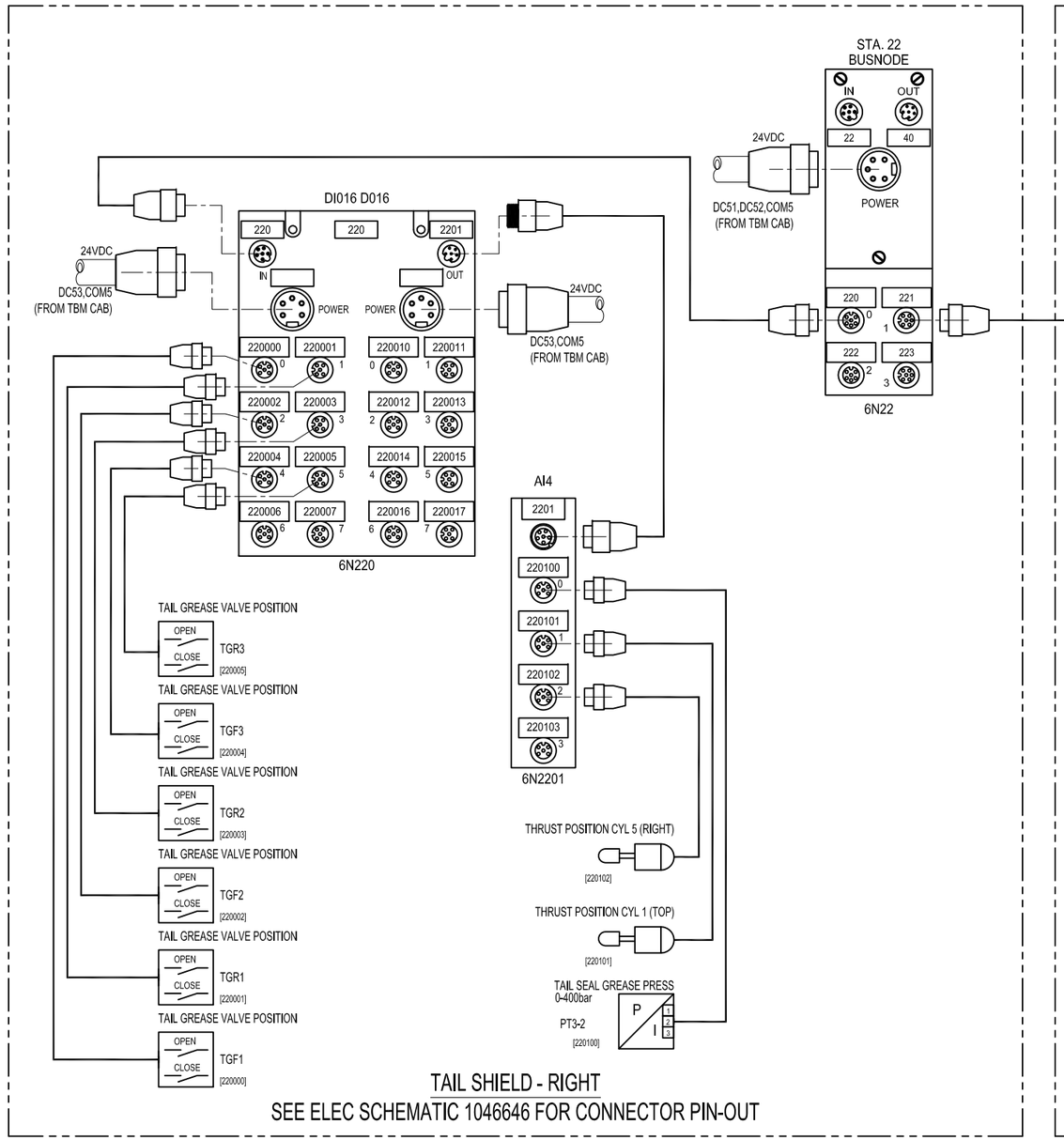

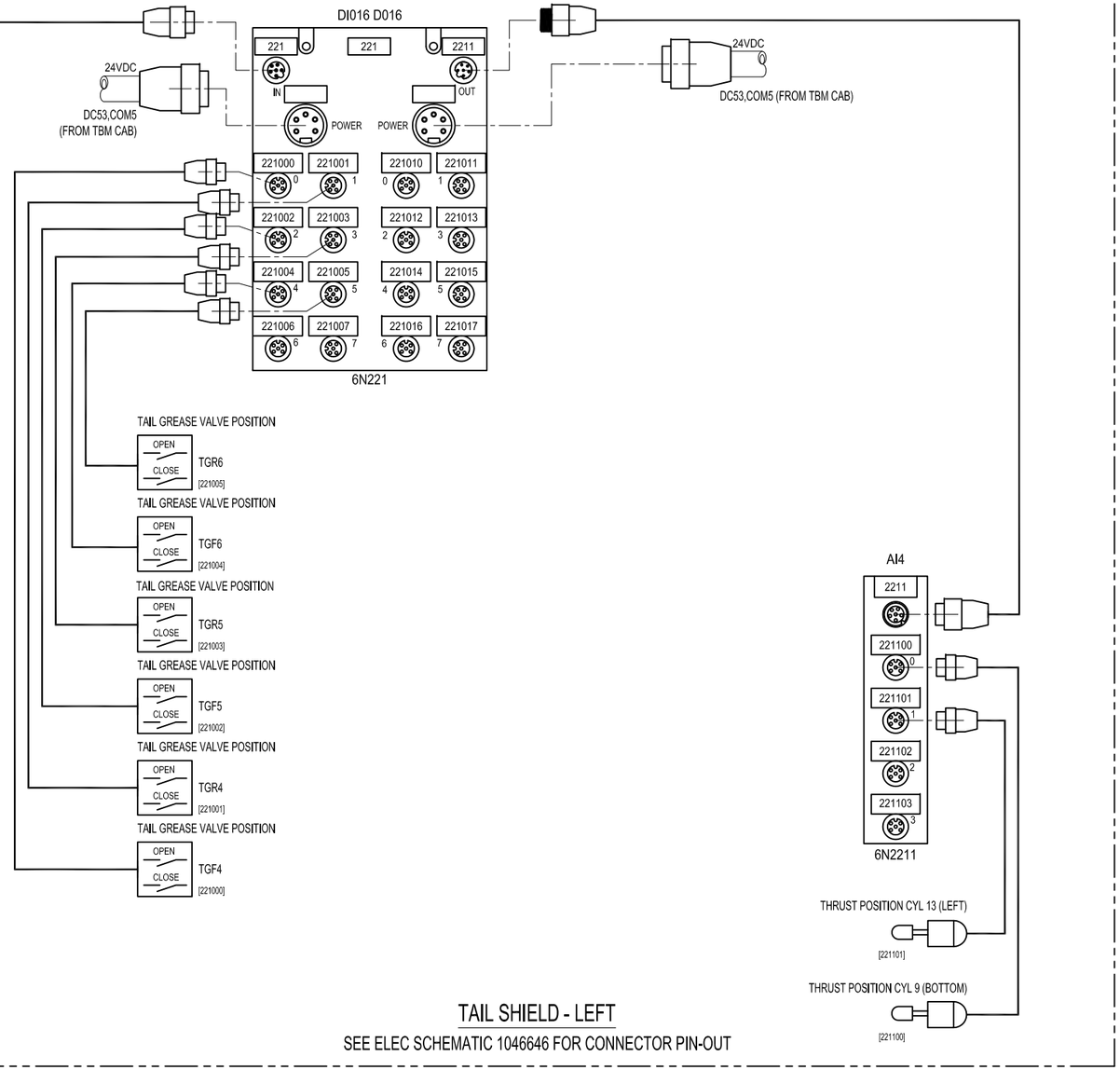

PROPRIETARY NOTICE
This information disclosed hereon is the sole property of Robbins and is furnished in confidence and shall not be duplicated in full or part, used by, or disclosed to any other party without written permission from Robbins. Company, by accepting this information, recipient agrees to return it upon request and not to reproduce, copy, or use it for any purpose other than that for which it is specifically furnished by Robbins. This material is not from vendor, but is Robbins proprietary information and is subject to the same restrictions.

MACHINE	NEXT ASSY
EPB2016-376/377	1046350

UNLESS NOTED ALL DIMS ARE mm
TOLERANCES UNLESS NOTED
FRACTIONS ±1/64
0-300 ±1/64 | X ±1.5
300-1500 ±3 | X.X ±1.0
1500-6000 ±6 | X.XX ±.40
6000+ ±12 | X.XXX ±.100
ANGLES ±1°
SURFACE FINISH 125
THIRD ANGLE PROJECTION
DIMENSIONS (X) ARE REFERENCE.
ALL GEOMETRIC DIMENSIONING & TOLERANCING PER ANSI Y14.5-2009

REV	DESCRIPTION	REV'D BY / DATE	APP'D BY / DATE

TITLE: ELECTRICAL SYSTEM CABLING
SAN FRANCISCO

SIZE	DWG No.	REV	SHT 6 OF 17	SCALE
D	1050374	0		1:1 DO NOT SCALE

DRAWN BY: P.BRENNAN DATE: 6/25/2012
CHECKED STRUCTURE: P.BRENNAN
CHECKED DESIGN: D.HOBBS
WEIGHT TOTAL:
APPROVED BY: D.HOBBS DATE: 6/25/2012

Robbins
www.TheRobbinsCompany.com

1050374

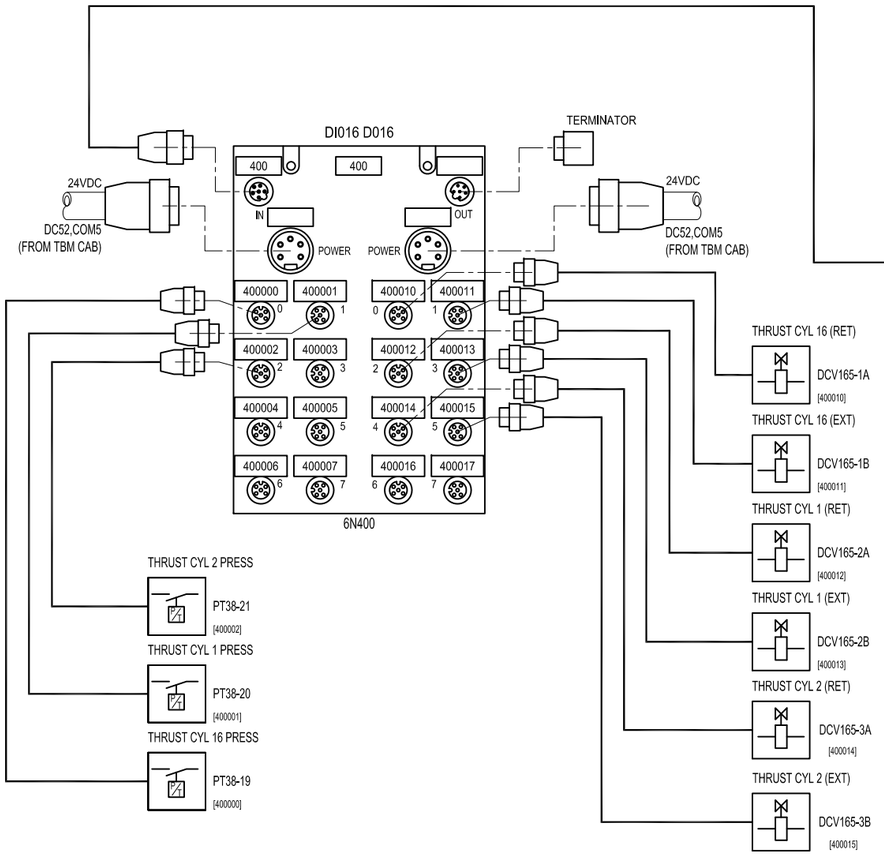

MID-SHIELD - 12 O'CLOCK

SEE ELEC SCHEMATIC 1046646 FOR CONNECTOR PIN-OUT

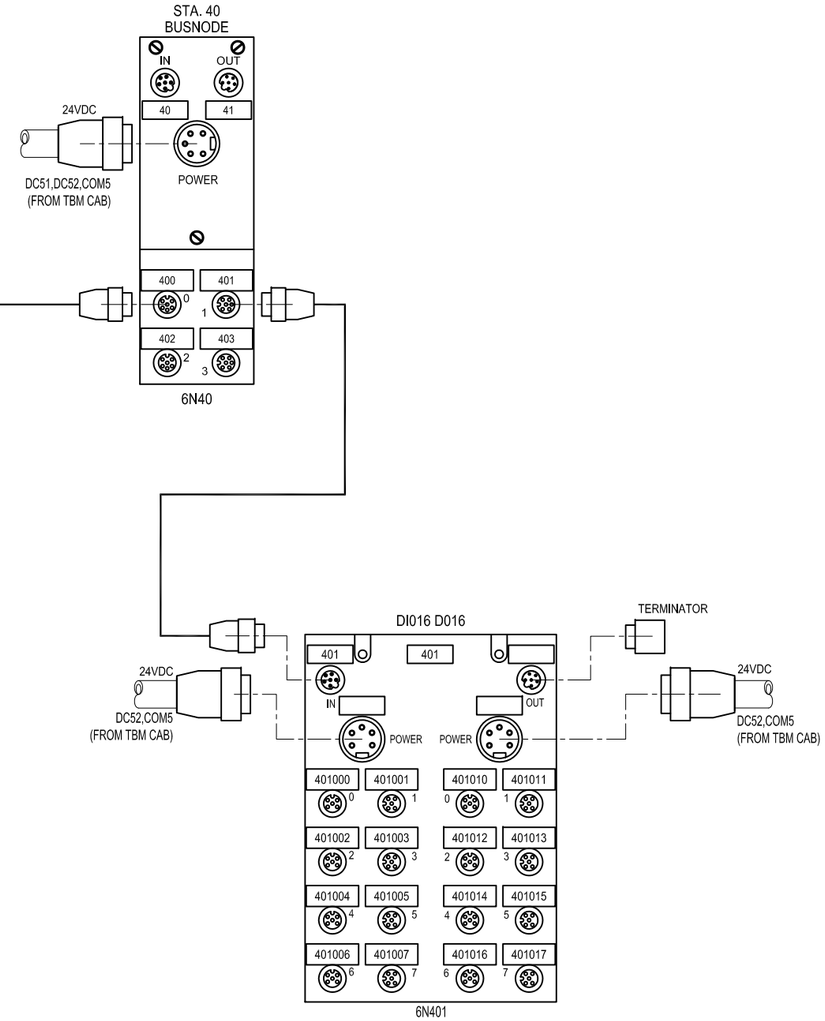

MID-SHIELD - 1 O'CLOCK

SEE ELEC SCHEMATIC 1046646 FOR CONNECTOR PIN-OUT

PROPRIETARY NOTICE
The information disclosed hereon is the sole property of The Robbins Company and is furnished in confidence and may not be duplicated in full or part, used by or disclosed to any other party without the written consent of The Robbins Company. By accepting this information, recipient agrees to obtain such consent prior to any such duplication, use or disclosure and to return this drawing upon request.

MACHINE	NEXT ASSY
EPB2016-376/377	1046350

UNLESS NOTED ALL DIMS ARE mm
TOLERANCES UNLESS NOTED

FRACTIONS	MACHINING
0-300 ± 1.5	X ± 1.5
300-1500 ± 3	X.X ± 1.0
1500-6000 ± 6	X.XX ± .40
6000+ ± 12	X.XXX ± .100
	ANGLES ± 1°
	SURFACE 63

UNLESS OTHERWISE SPECIFIED
DIMENSIONS (X) ARE REFERENCE
ALL GEOMETRIC DIMENSIONING & TOLERANCING PER ANSI Y14.5-2009

REV	DESCRIPTION	REV'D BY / DATE	APP'D BY / DATE

TITLE: ELECTRICAL SYSTEM CABLING SAN FRANCISCO

SIZE	DWG No.	REV	SHT	SCALE
D	1050374	0	7 of 17	1:1

DO NOT SCALE

DRAWN BY: P.BRENNAN
DATE: 6/25/2012
CHECKED BY (ENGINEER): P.BRENNAN
CHECKED 2ED BY: D.HOBBS
WEIGHT TOTAL:
APPROVED BY: D.HOBBS
DATE: 6/25/2012

Robbins

www.TheRobbinsCompany.com

1050374

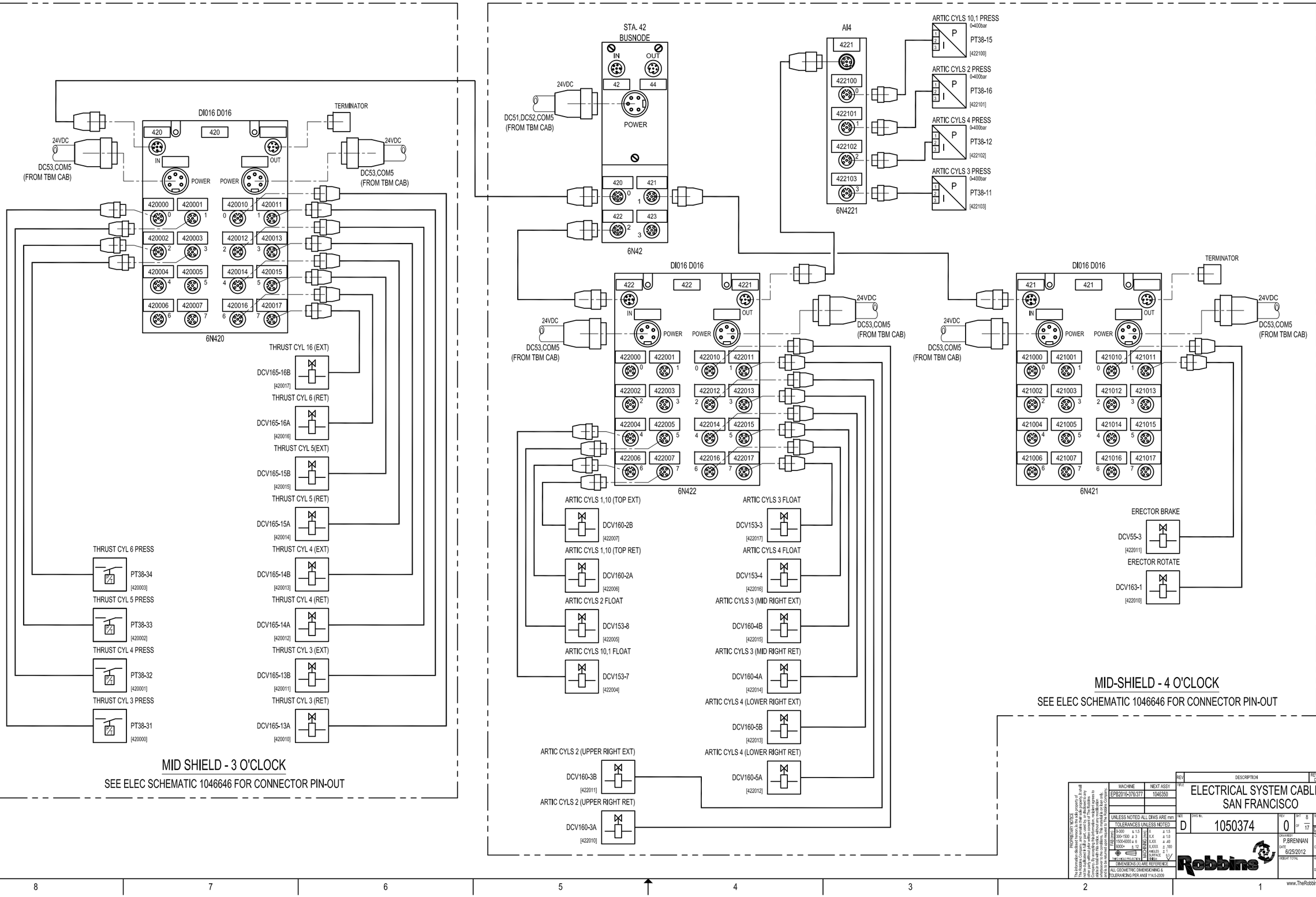

MID SHIELD - 3 O'CLOCK

SEE ELEC SCHEMATIC 1046646 FOR CONNECTOR PIN-OUT

MID-SHIELD - 4 O'CLOCK

SEE ELEC SCHEMATIC 1046646 FOR CONNECTOR PIN-OUT

PROPRIETARY NOTICE
This information disclosed hereon, to the sole property of The Robbins Company and is furnished in confidence. It shall not be duplicated in whole or part, used by or disclosed to any third party for any purpose without the written permission of Consumers. By accepting this information, recipient agrees to use it only for the purpose for which it is furnished and to be bound hereby to the conditions. This restriction does not limit rights with respect to information obtained from another source lawfully.

MACHINE	NEXT ASSY
EPB2016-376377	1046350

UNLESS NOTED ALL DIMS ARE mm
TOLERANCES UNLESS NOTED

0-300	± 1.5	X	± 1.5
300-1500	± 3	X.X	± 1.0
1500-6000	± 6	X.XX	± .40
6000+	± 12	X.XXX	± .100
		ANGLES	± 1°
		SURFACE	125

DIMENSIONS (X) ARE REFERENCE
ALL GEOMETRIC DIMENSIONING & TOLERANCING PER ANSI Y14.5-2009

REV	DESCRIPTION	REV'D BY / DATE	APP'D BY / DATE

TITLE: ELECTRICAL SYSTEM CABLING SAN FRANCISCO

SIZE	DWG No.	REV	SHT 8 OF 17	SCALE
D	1050374	0		1:1 DO NOT SCALE

DRAWN BY: P.BRENNAN DATE: 6/25/2012
CHECKED 1ST REVIEW: P.BRENNAN
CHECKED DESIGN: D.HOBBS
WEIGHT TOTAL:
APPROVED BY: D.HOBBS DATE: 6/25/2012

Robbins

www.TheRobbinsCompany.com

1050374

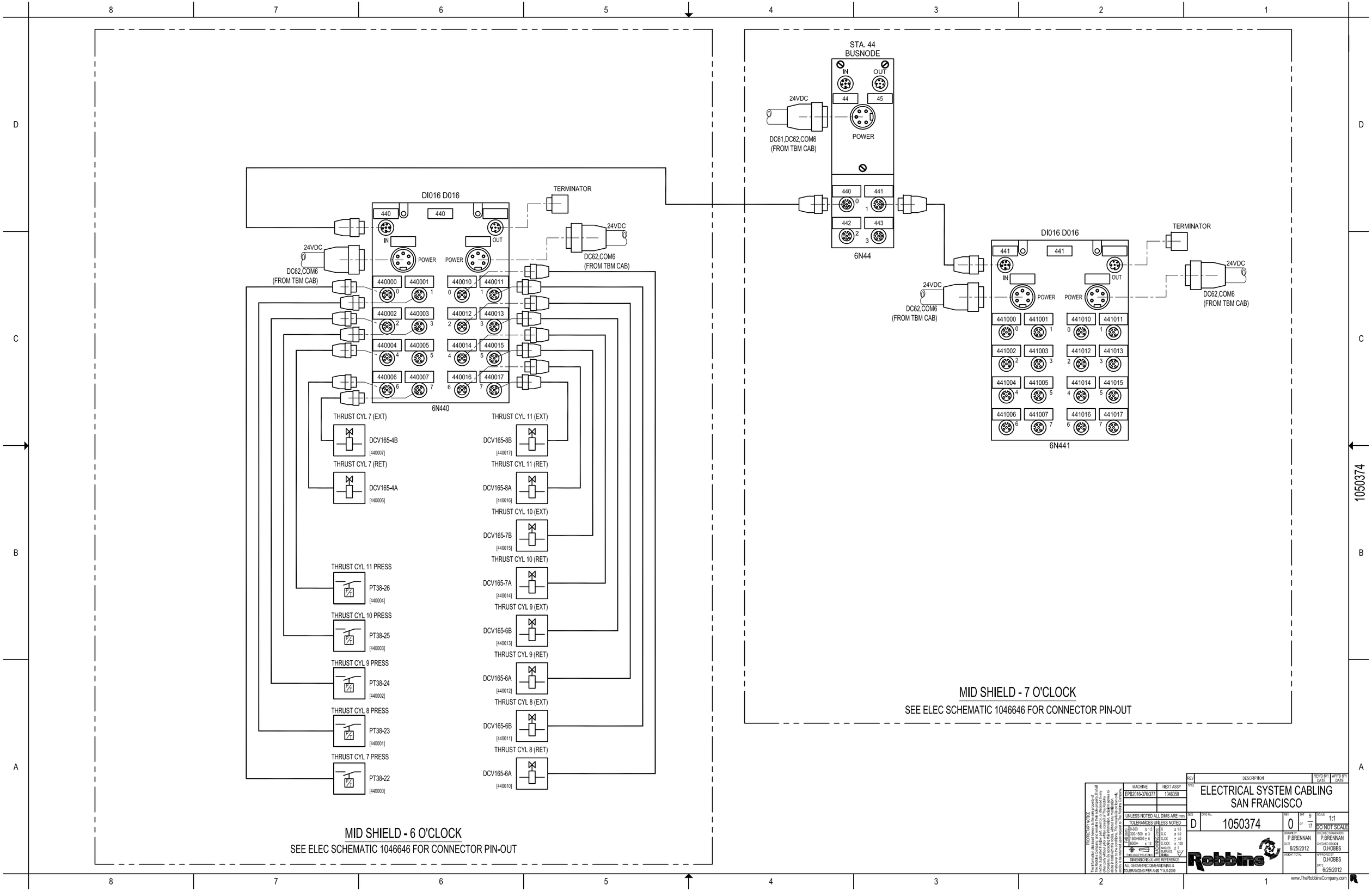

REV	DESCRIPTION	REV'D BY/ DATE	APP'D BY/ DATE

TITLE: ELECTRICAL SYSTEM CABLING SAN FRANCISCO

MACHINE	NEXT ASSY
EPB2016-376/377	1046350

UNLESS NOTED ALL DIMS ARE mm

TOLERANCES UNLESS NOTED

FAB (mm)	MACHINING (mm)
0-300 ± 1.5	X ± 1.5
300-1500 ± 3	X.X ± 1.0
1500-6000 ± 6	X.XX ± .40
6000+ ± 12	X.XXX ± .100
	ANGLES ± 1
	SURFACE 63
THIRD ANGLE PROJECTION	DIMENSIONS (X) ARE REFERENCE

ALL GEOMETRIC DIMENSIONING & TOLERANCING PER ANSI Y14.5-2009

SIZE	DWG No.	REV	SHT	SCALE
D	1050374	0	9 OF 17	1:1

DO NOT SCALE

DRAWN BY: P.BRENNAN — DATE: 6/25/2012

CHECKED STANDARDS: P.BRENNAN — CHECKED DESIGN: D.HOBBS

WEIGHT TOTAL:

APPROVED BY: D.HOBBS — DATE: 6/25/2012

Robbins

www.TheRobbinsCompany.com

PROPRIETARY NOTICE
The information disclosed hereon is the sole property of The Robbins Company and remains the sole property. It shall not be disclosed in full or part, used by or disclosed to any other party without prior written consent of The Robbins Company. By accepting this information, recipient agrees to make its best efforts to prevent any other disclosure or use in any form or by any means, whatsoever to the condition. The material is not to be sold, and is to be returned upon request to The Robbins Company.

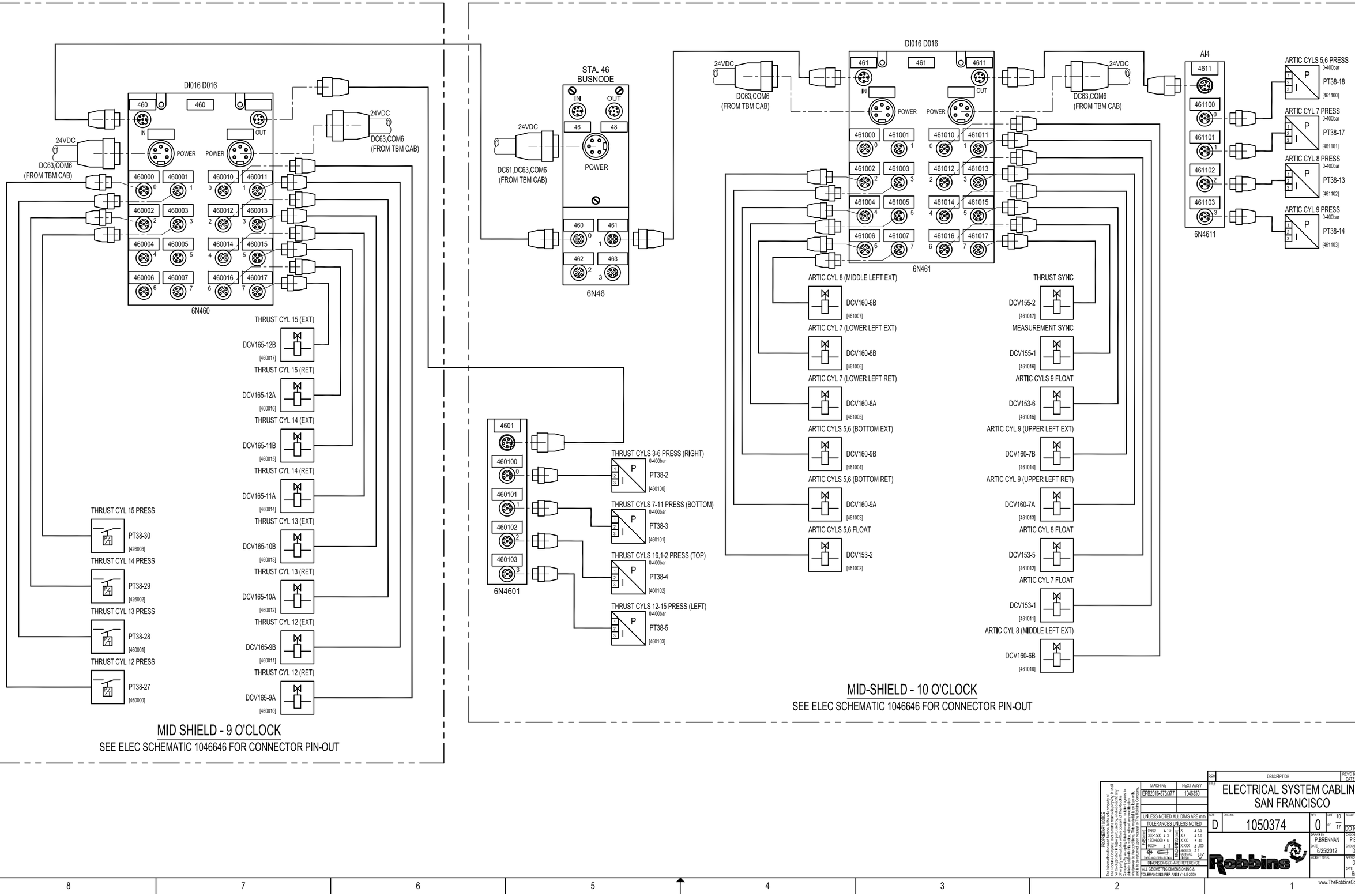

REV	DESCRIPTION	REV'D BY / DATE	APP'D BY / DATE

TITLE: ELECTRICAL SYSTEM CABLING SAN FRANCISCO

MACHINE	NEXT ASSY
EPB2016-376/377	1046350

UNLESS NOTED ALL DIMS ARE mm
TOLERANCES UNLESS NOTED
0-300 ± 1.5 | 300-1500 ± 3 | 1500-6000 ± 6 | 6000+ ± 12
X ± 1.5 | X.X ± 1.0 | X.XX ± .40 | X.XXX ± .100 | ANGLES ± 1° | SURFACE FINISH 63
THIRD ANGLE PROJECTION
DIMENSIONS (X) ARE REFERENCE
ALL GEOMETRIC DIMENSIONING & TOLERANCING PER ANSI Y14.5-2009

SIZE: D | DWG No.: 1050374 | REV: 0 | SHT 10 OF 17 | SCALE: 1:1 | DO NOT SCALE

DRAWN BY: P.BRENNAN | DATE: 6/25/2012
CHECKED STANDARDS: P.BRENNAN
CHECKED SEEN IN: D.HOBBS
WEIGHT TOTAL:
APPROVED BY: D.HOBBS | DATE: 6/25/2012

Robbins

www.TheRobbinsCompany.com

1050374

PROPRIETARY NOTICE
The information disclosed hereon is the sole property of The Robbins Company and is not to be disclosed to others or used for any purpose not to the advantage of The Robbins Company, except as authorized in writing. By accepting this information, recipient agrees to indemnify The Robbins Company against any loss or liability resulting from any unauthorized use. This information is also subject to the restrictions on export control contained in the Export Administration Act of 1979, as amended, and any regulations promulgated thereunder.

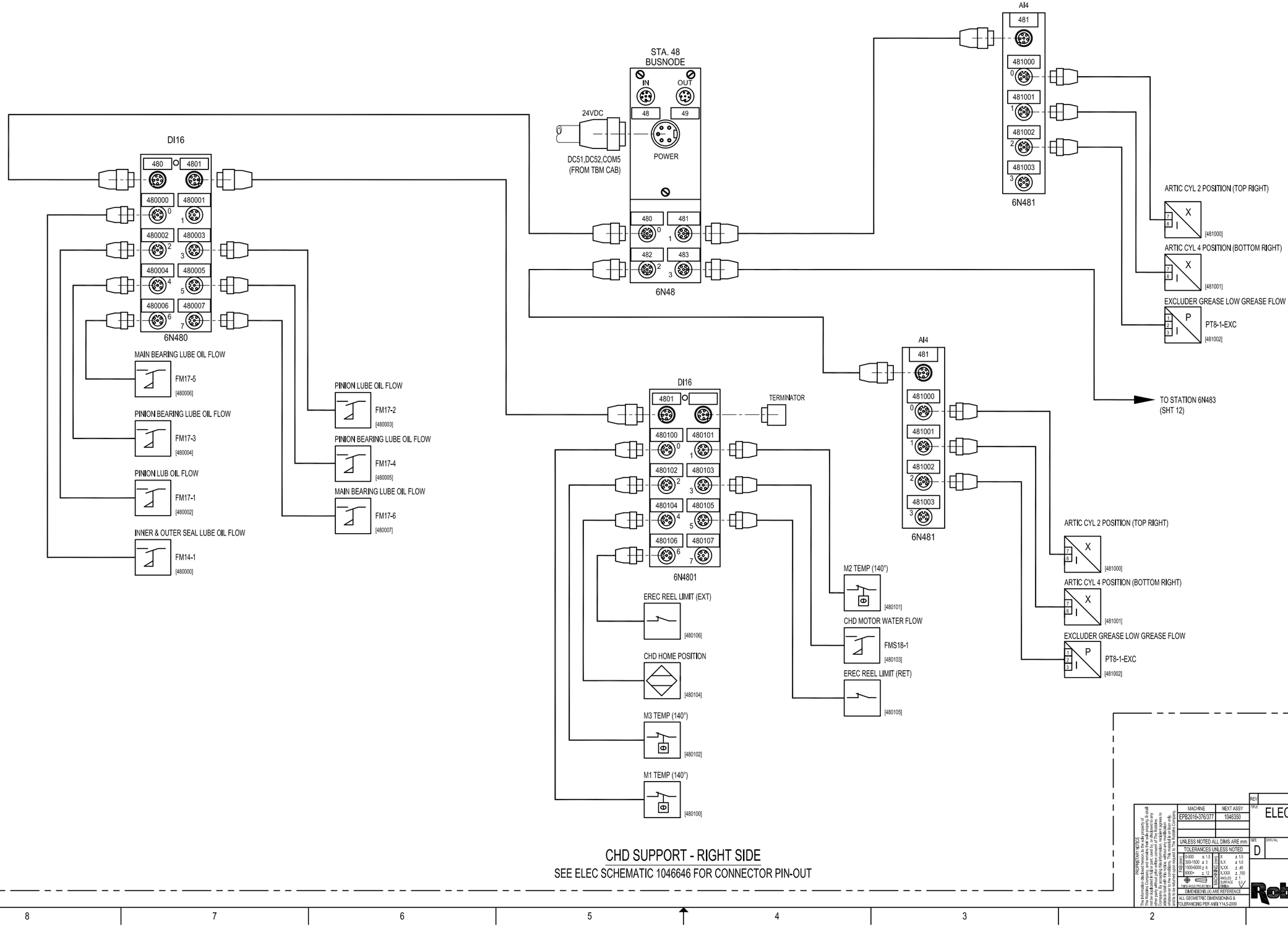

CHD SUPPORT - RIGHT SIDE

SEE ELEC SCHEMATIC 1046646 FOR CONNECTOR PIN-OUT

PROPRIETARY NOTICE
The information disclosed hereon is the sole property of The Robbins Company and may not be reproduced in full or part, used by, or disclosed to any person or entity without the written permission of The Robbins Company. By accepting this information, recipient agrees to not reproduce, use or disclose it for any purpose not specifically authorized in the conditions. This notice is not to be removed or altered in any way. Unpublished - All rights reserved under the Copyright Laws of the United States.

MACHINE	NEXT ASSY
EPB2016-378/377	1046350

UNLESS NOTED ALL DIMS ARE mm
TOLERANCES UNLESS NOTED
0-300 ± 1.0
300-1500 ± 3
1500-6000 ± 6
6000+ ± 12
FRACTIONS ± 1/64
THIRD ANGLE PROJECTION
DIMENSIONS IN ( ) ARE REFERENCE
ALL GEOMETRIC DIMENSIONING & TOLERANCING PER ANSI Y14.5-2009

DECIMALS	
X	± 1.0
X.X	± 1.0
X.XX	± .40
X.XXX	± .100
ANGLES	± 1°
SURFACE	63

REV	DESCRIPTION	REV'D BY / DATE	APP'D BY / DATE

TITLE: ELECTRICAL SYSTEM CABLING SAN FRANCISCO

SIZE D | DWG No. 1050374 | REV 0 | SHT 11 OF 17 | SCALE 1:1 | DO NOT SCALE

DRAWN BY P.BRENNAN DATE 6/25/2012
CHECKED STANDARDS P.BRENNAN
CHECKED DESIGN D.HOBBS
WEIGHT TOTAL
APPROVED BY D.HOBBS DATE 6/25/2012

Robbins

www.TheRobbinsCompany.com

1050374

TO STATION 48
(SHT 11)

DI16

483 | 4831

483000 | 483001
483002 | 483003
483004 | 483005
483006 | 483007

6N483

BENT INJ: SHL GAP PROX
PX11-4A
[483006]

BENT INJ: GROUT FLUSH PROX
PX11-4B
[483007]

BENT INJ: SHL GAP PROX
PX11-3A
[483004]

BENT INJ: GROUT FLUSH PROX
PX11-3B
[483005]

BENT INJ: SHL GAP PROX
PX11-2A
[483002]

BENT INJ: GROUT FLUSH PROX
PX11-2B
[483003]

BENT INJ: SHL GAP PROX
PX11-1A
[483000]

BENT INJ: GROUT FLUSH PROX
PX11-1B
[483001]

DI16

4831 | 4832

483100 | 483101
483102 | 483103
483104 | 483105
483106 | 483107

6N483

ADDITIVE INJ: KF4 PROX
PX11-4A
[483106]

FOAM INJ: KF4 PROX
PX11-4B
[483107]

ADDITIVE INJ: KF1 PROX
PX11-3A
[483104]

FOAM INJ: KF1 PROX
PX11-3B
[483105]

ADDITIVE INJ: KF2 PROX
PX11-2A
[483102]

FOAM INJ: KF2 PROX
PX11-2B
[483103]

ADDITIVE INJ: KF3 PROX
PX11-1A
[483100]

FOAM INJ: KF3 PROX
PX11-1B
[483101]

DI16

4832 | TERMINATOR

483200 | 483201
483202 | 483203
483204 | 483205
483206 | 483207

6N483

ADDITIVE INJ: KF5 PROX
PX11-5A
[483200]

FOAM INJ: KF5 PROX
PX11-5B
[483201]

CHD SUPPORT - RIGHT SIDE

SEE ELEC SCHEMATIC 1046646 FOR CONNECTOR PIN-OUT

PROPRIETARY NOTICE
The information disclosed hereon is the sole property of The Robbins Company and is not to be used, copied, or disclosed to any person or entity without the written consent of The Robbins Company. By accepting this information, recipient agrees to hold it in confidence and to use it solely for the purpose for which it is transmitted. This notice shall not be construed to limit any rights which may exist in this information under applicable law.

MACHINE	NEXT ASSY
EPB2016-376/377	1046350

UNLESS NOTED ALL DIMS ARE mm
TOLERANCES UNLESS NOTED

0-300	± .5
300-1500	± .9
1500-6000	± .6
6000+	± .12

FINISH
MFG ONLY PROJECT #
DIMENSIONS (X) ARE REFERENCE
ALL GEOMETRIC DIMENSIONING & TOLERANCING PER ANSI Y14.5-2009

X	± 1.5
X.X	± 1.0
X.XX	± .40
X.XXX	± .100
ANGLES	± 1°
SURFACE FINISH	125

REV	DESCRIPTION	REV'D BY / DATE	APP'D BY / DATE

TITLE: ELECTRICAL SYSTEM CABLING
SAN FRANCISCO

SIZE	DWG NO.	REV	SHT	SCALE
D	1050374	0	12 OF 17	1:1

DO NOT SCALE

DRAWN BY: P.BRENNAN
DATE: 6/25/2012
CHECKED STRUCTURES: P.BRENNAN
CHECKED SYSTEM: D.HOBBS
APPROVED BY: D.HOBBS
DATE: 6/25/2012
WEIGHT TOTAL:

Robbins
www.TheRobbinsCompany.com

1050374

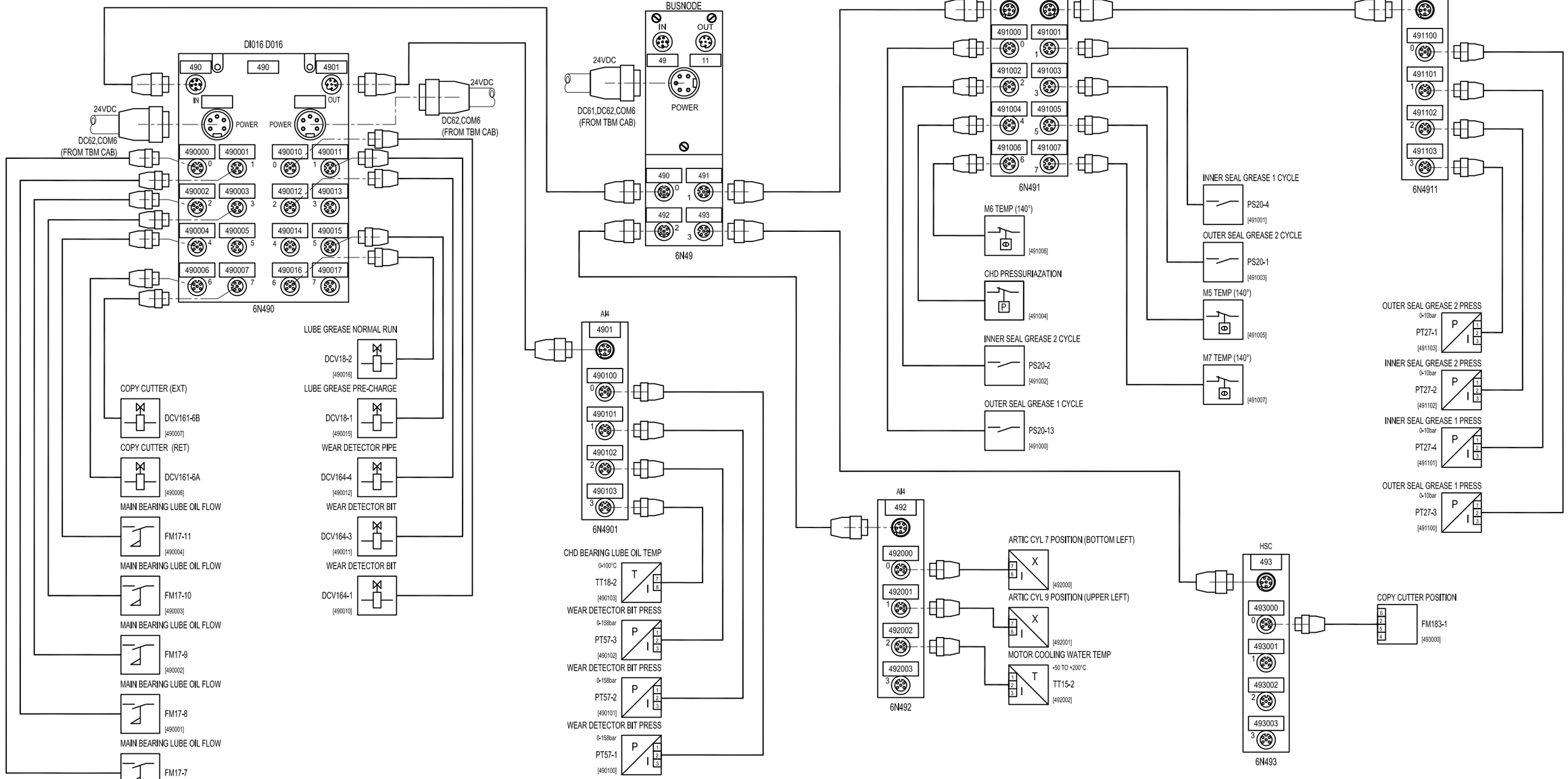

CHD SUPPORT - LEFT SIDE

SEE ELEC SCHEMATIC 1046646 FOR CONNECTOR PIN-OUT

PROPRIETARY NOTICE
The information disclosed hereon is the sole property of The Robbins Company and is considered confidential. It shall not be duplicated in full or part, used by, or disclosed to any person, firm or corporation for any purpose whatsoever without the Company's written permission. By accepting this information, recipient agrees to abide by the foregoing restrictions and to return this drawing at whatsoever is the conditions. The marking of the item with, or the inclusion on the drawing of, any patent right does not imply that the item is licensed for manufacture or sale by The Robbins Company.

MACHINE	NEXT ASSY
EPB2016-378/377	1046350

UNLESS NOTED ALL DIMS ARE mm
TOLERANCES UNLESS NOTED
FRACTIONS ± 1/64
DECIMALS X.X ± 1.0, X.XX ± .40, X.XXX ± .100
ANGLES ± 1°
SURFACE 63 125Ra
DIMENSIONS IN ARE REFERENCE
ALL GEOMETRIC DIMENSIONING & TOLERANCING PER ANSI Y14.5-2009

REV	DESCRIPTION	REVD BY / DATE	APPD BY / DATE

TITLE: ELECTRICAL SYSTEM CABLING SAN FRANCISCO

SIZE D | DWG No. 1050374 | REV 0 | SHT 13 OF 17 | SCALE 1:1 | DO NOT SCALE

DRAWN BY: P.BRENNAN, DATE 6/25/2012
CHECKED STD/HNDBK: P.BRENNAN
CHECKED DESIGN: D.HOBBS
WEIGHT TOTAL:
APPROVED BY: D.HOBBS, DATE 6/25/2012

Robbins

www.TheRobbinsCompany.com

1050374

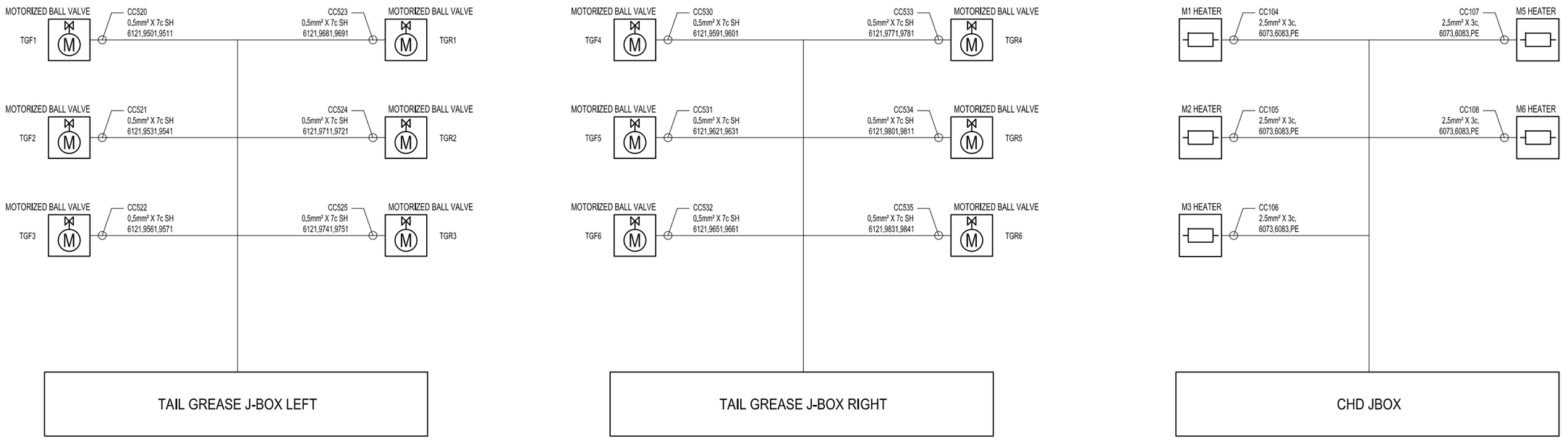

PROPRIETARY NOTICE
This information disclosed hereon is the sole property of The Robbins Company and is considered confidential. It shall not be duplicated in full or part, used by, or disclosed to any person, firm or corporation for any purpose except as The Robbins Company may specifically authorize in writing. By acceptance this information, recipient agrees to abide by the foregoing restrictions and to return this drawing whenever requested to do so by The Robbins Company.

MACHINE	NEXT ASSY
EPB2016-378/377	1046350

UNLESS NOTED ALL DIMS ARE mm
TOLERANCES UNLESS NOTED
FRACTIONS ± 1/32
0-300 ± 1/2
300-1500 ± 3
1500-6000 ± 6
6000+ ± 12
DECIMALS
X ± 1.5
X.X ± 1.0
X.XX ± .40
X.XXX ± .100
ANGLES ± 1
SURFACE 1/4
THIRD ANGLE PROJECTION
DIMENSIONS (X) ARE REFERENCE
ALL GEOMETRIC DIMENSIONING & TOLERANCING PER ANSI Y14.5-2009

REV	DESCRIPTION	REV'D BY / DATE	APP'D BY / DATE

TITLE: ELECTRICAL SYSTEM CABLING SAN FRANCISCO

SIZE	DWG NO.	REV	SHT	SCALE
D	1050374	0	14 OF 17	1:1 DO NOT SCALE

DRAWN BY: P.BRENNAN, DATE: 6/25/2012
CHECKED STANDARDS: P.BRENNAN
CHECKED DESIGN: D.HOBBS
WEIGHT TOTAL:
APPROVED BY: D.HOBBS, DATE: 6/25/2012

Robbins

www.TheRobbinsCompany.com

1050374

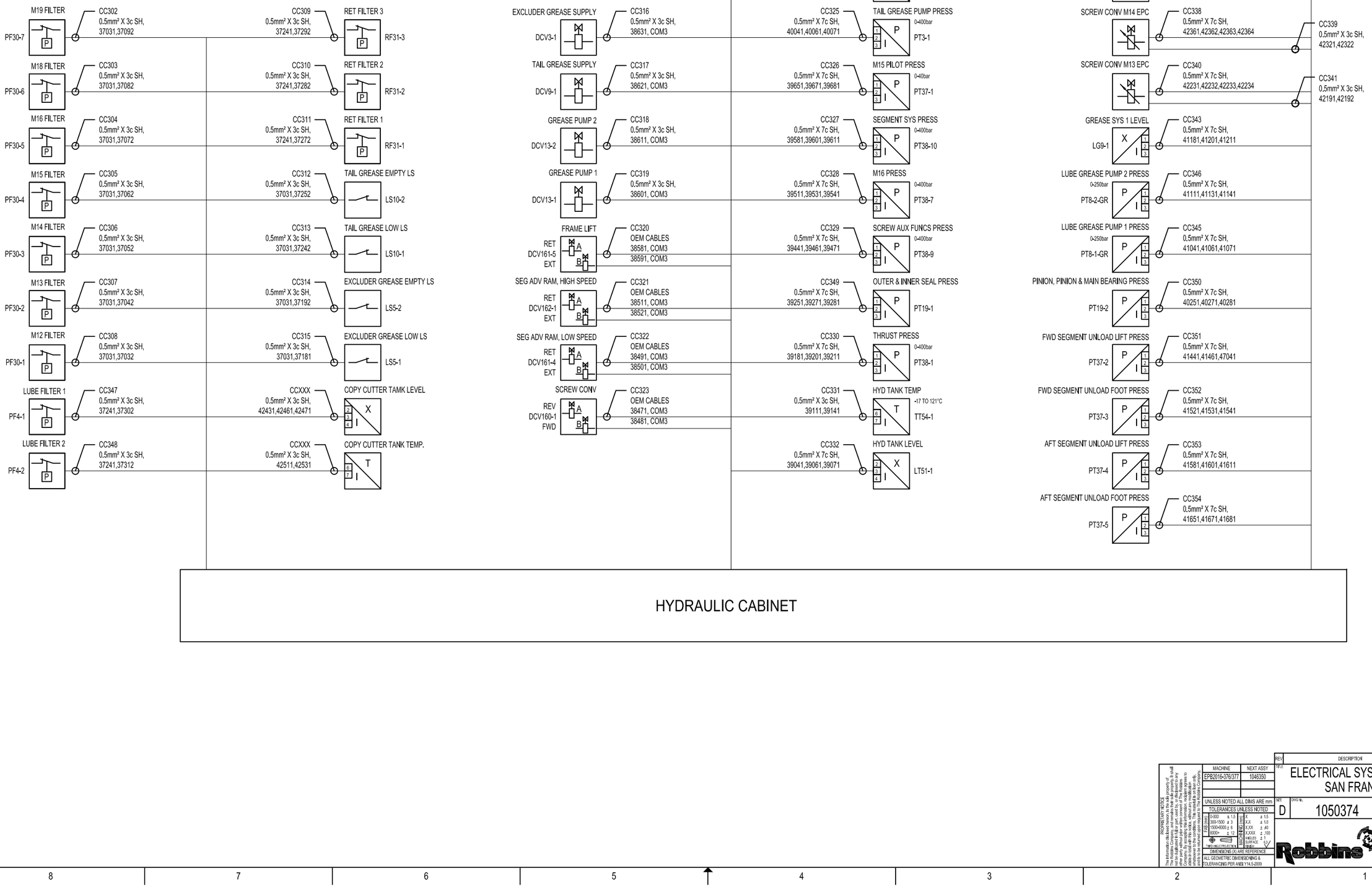

PROPRIETARY NOTICE
This information disclosed hereon is the sole property of The Robbins Company and is considered confidential. It shall not be duplicated in full or part, used by, or disclosed to any person, firm or corporation for any purpose except as The Robbins Company may specifically authorize in writing. By acceptance this information, recipient agrees to adhere to the foregoing restrictions and to hold The Robbins Company harmless from any violations of these restrictions by whatsoever to the extent permitted by law. This material is not work-for-hire as defined by U.S. Copyright Law. © The Robbins Company

MACHINE	NEXT ASSY
EPB2016-378/377	1046350

UNLESS NOTED ALL DIMS ARE mm
TOLERANCES UNLESS NOTED
FRACTIONS ± 1/32
DECIMALS: X ± 1.5, XX ± 1.0, XXX ± .40, XXXX ± .100
ANGLES ± 1°
SURFACE ROUGHNESS 64
THIRD ANGLE PROJECTION
DIMENSIONS IN ARE REFERENCE
ALL GEOMETRIC DIMENSIONING & TOLERANCING PER ANSI Y14.5-2009

REV	DESCRIPTION	REV'D BY / DATE	APP'D BY / DATE

TITLE: ELECTRICAL SYSTEM CABLING SAN FRANCISCO

SIZE D | DWG NO. 1050374 | REV 0 | SHT 15 OF 17 | SCALE 1:1 | DO NOT SCALE

DRAWN BY P.BRENNAN | DATE 6/25/2012 | CHECKED BY/HNDBOS P.BRENNAN | CHECKED BY/MUM D.HOBBS | WEIGHT TOTAL | APPROVED BY D.HOBBS | DATE 6/25/2012

Robbins

www.TheRobbinsCompany.com

1050374

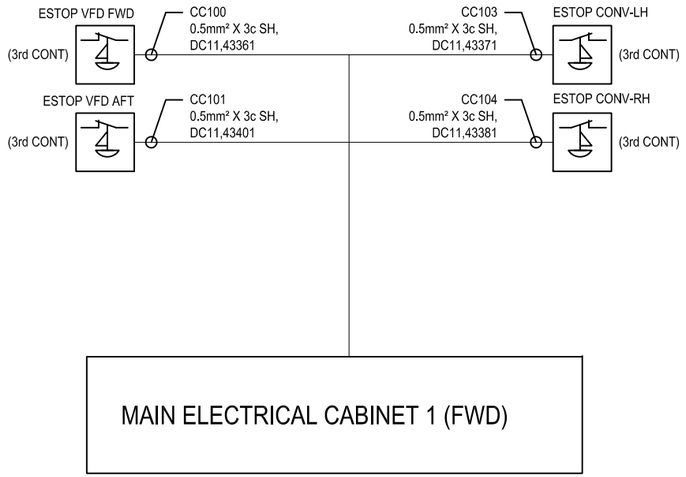

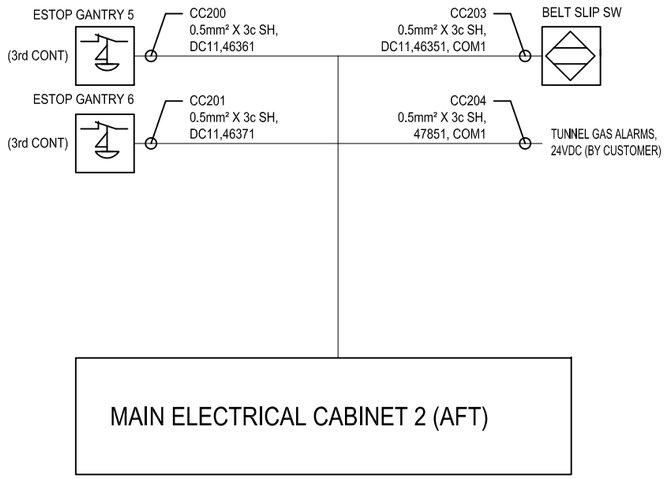

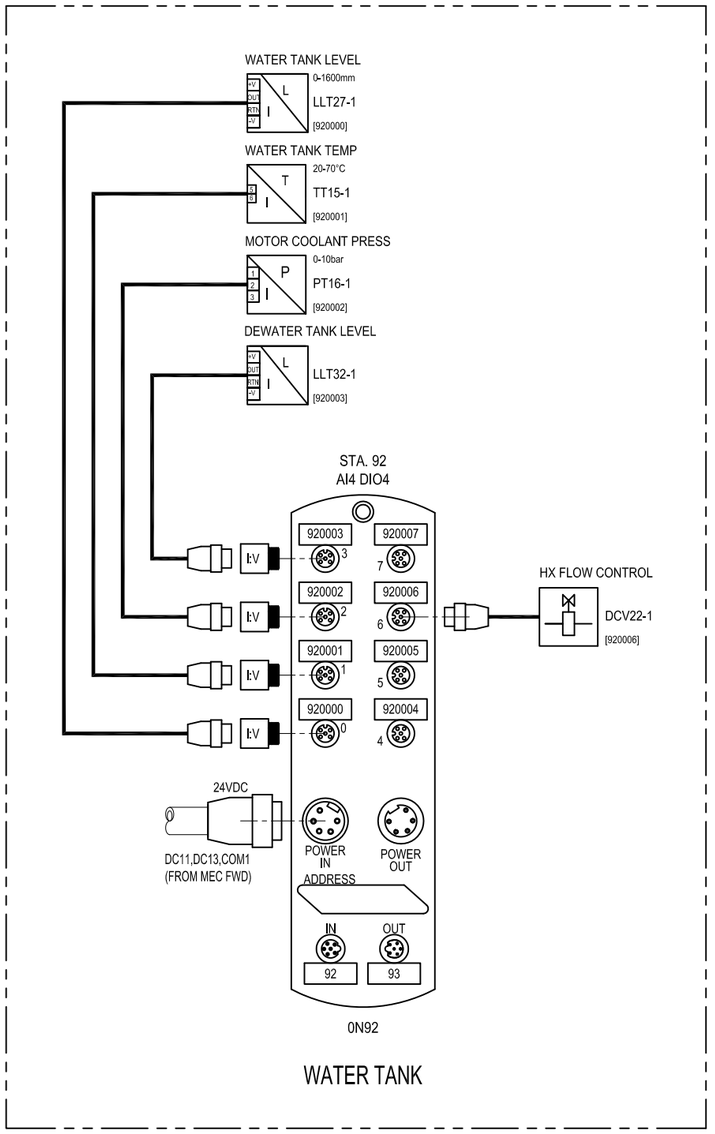

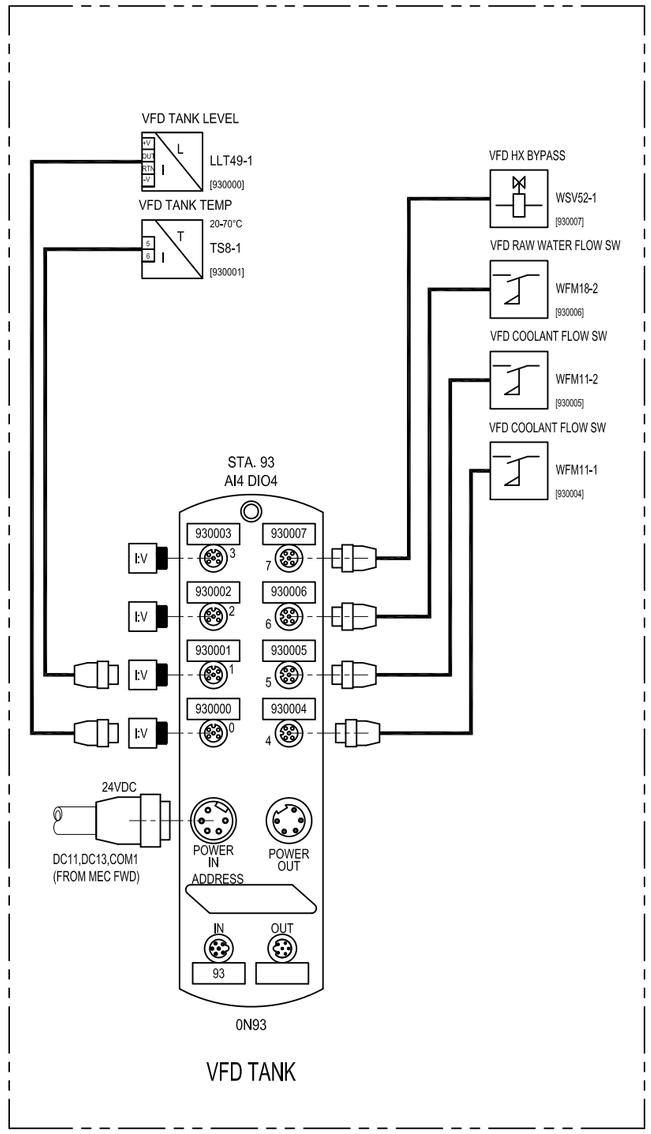

PROPRIETARY NOTICE
This information disclosed hereon is the sole property of Robbins Company and is not to be disclosed to others or used for any purpose not in the interest of Robbins Company. By accepting this information, recipient agrees to protect the same from loss, theft or disclosure and to return it at its own expense upon request or when no longer needed for the purpose for which it was furnished. This material is on loan only, and neither it nor the information it covers may be reproduced without the written permission of Robbins Company.

MACHINE	NEXT ASSY
EPB2016-376/377	1046350

UNLESS NOTED ALL DIMS ARE mm
TOLERANCES UNLESS NOTED

0-300	± 1.5	X	± 1.5
300-1500	± 3	X.X	± 1.0
1500-6000	± 6	X.XX	± .40
6000+	± 12	X.XXX	± .100
		ANGLES	± 1°
		SURFACE FINISH	63

DIMENSIONS (X) ARE REFERENCE
ALL GEOMETRIC DIMENSIONING & TOLERANCING PER ANSI Y14.5-2009

REV	DESCRIPTION	REV'D BY / DATE	APP'D BY / DATE

TITLE: ELECTRICAL SYSTEM CABLING SAN FRANCISCO

SIZE	DWG No.	REV	SHT	SCALE
D	1050374	0	16 OF 17	1:1

DO NOT SCALE

DRAWN BY: P.BRENNAN
DATE: 6/25/2012
CHECKED STANDARDS: P.BRENNAN
CHECKED DESIGN: D.HOBBS
WEIGHT TOTAL:
APPROVED BY: D.HOBBS
DATE: 6/25/2012

Robbins
www.TheRobbinsCompany.com

1050374

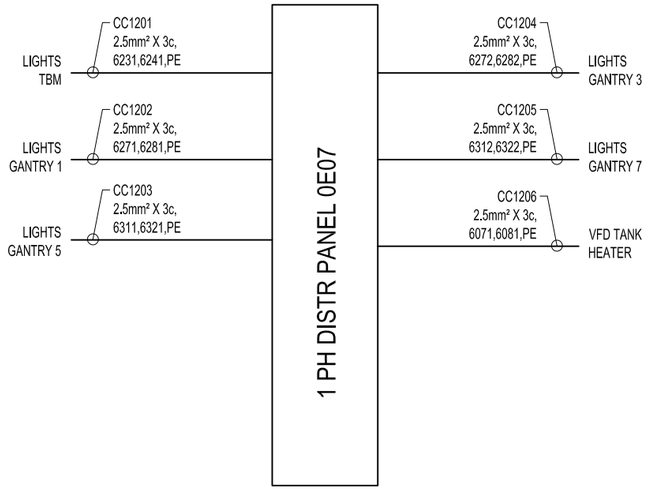

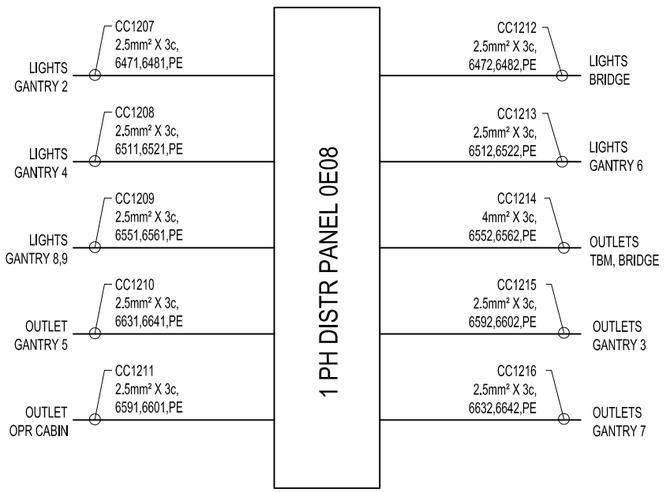

1 PH DISTRIBUTION PANELS

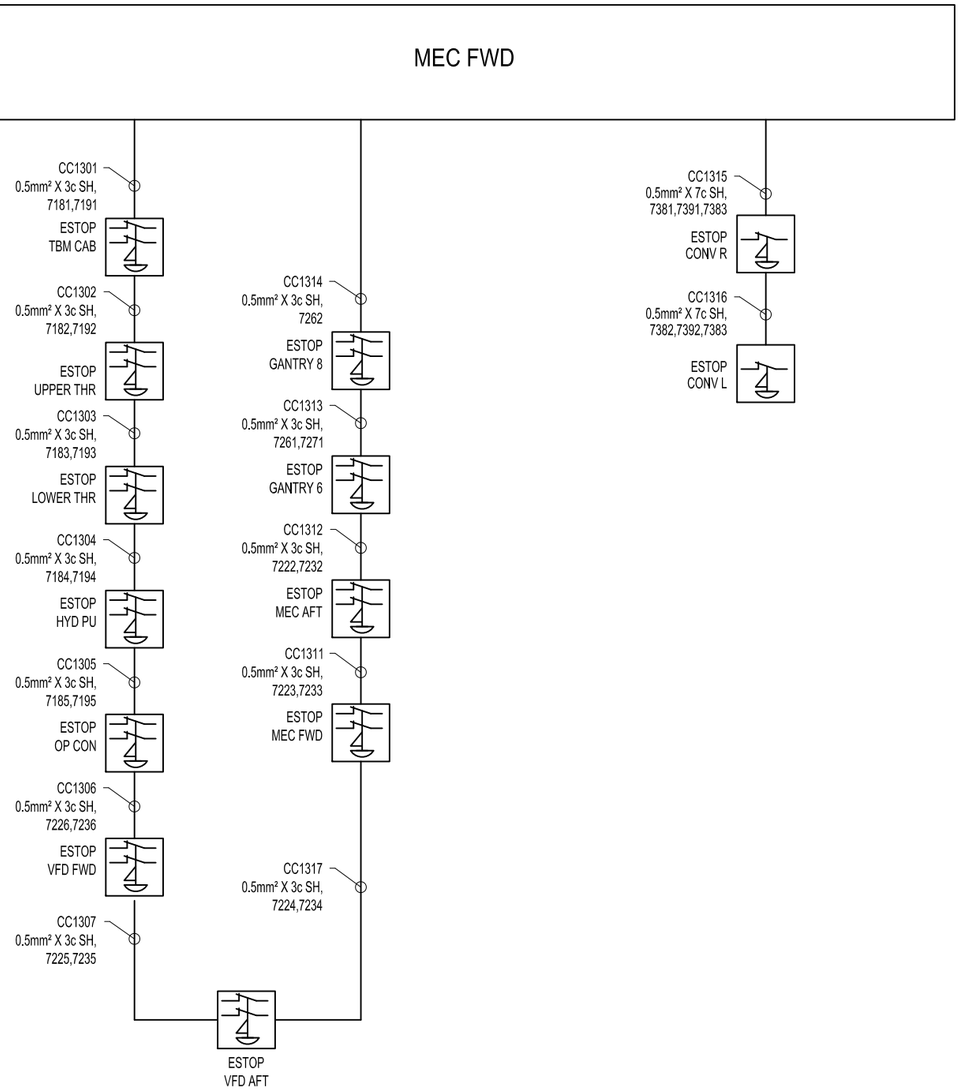

ESTOP SAFETY CIRCUIT

PROPRIETARY NOTICE
The information disclosed hereon is the sole property of The Robbins Company and is considered a trade secret. It shall not be duplicated in full or part, used by, or disclosed to any person, firm or corporation for any purpose whatsoever by The Robbins Company. By accepting this information, recipient agrees to indemnify The Robbins Company against any loss, expense or damage resulting from recipient's unauthorized use of this information. This material is not loan until returned upon demand. It must not be copied in whole or in part without the written permission of The Robbins Company.

MACHINE	NEXT ASSY
EPB2016-376/377	1046350

UNLESS NOTED ALL DIMS ARE mm
TOLERANCES UNLESS NOTED

0-300	± 1.5	X	± 1.5
300-1500	± 3	X.X	± 1.0
1500-6000	± 6	X.XX	± .40
6000+	± 12	X.XXX	± .100
		ANGLES	± 1°
		SURFACE FINISH	63

DIMENSIONS (X) ARE REFERENCE
ALL GEOMETRIC DIMENSIONING & TOLERANCING PER ANSI Y14.5-2009

REV	DESCRIPTION	REV'D BY / DATE	APP'D BY / DATE

TITLE: ELECTRICAL SYSTEM CABLING SAN FRANCISCO

SIZE	DWG no.	REV	SHT 17 OF 17	SCALE
D	1050374	0		1:1

DO NOT SCALE

DRAWN BY: P.BRENNAN
DATE: 6/25/2012
CHECKED BY: P.BRENNAN
CHECKED DESIGN: D.HOBBS
WEIGHT TOTAL:
APPROVED BY: D.HOBBS
DATE: 6/25/2012

Robbins

www.TheRobbinsCompany.com

1050374

QTY	PART No.	DESCRIPTION	DWG No.	Component/Vendor ID	ITEM
12	5750 0011 95	TELEPHONE			1
200M	5750 0023 26	PHONE CABLE			2

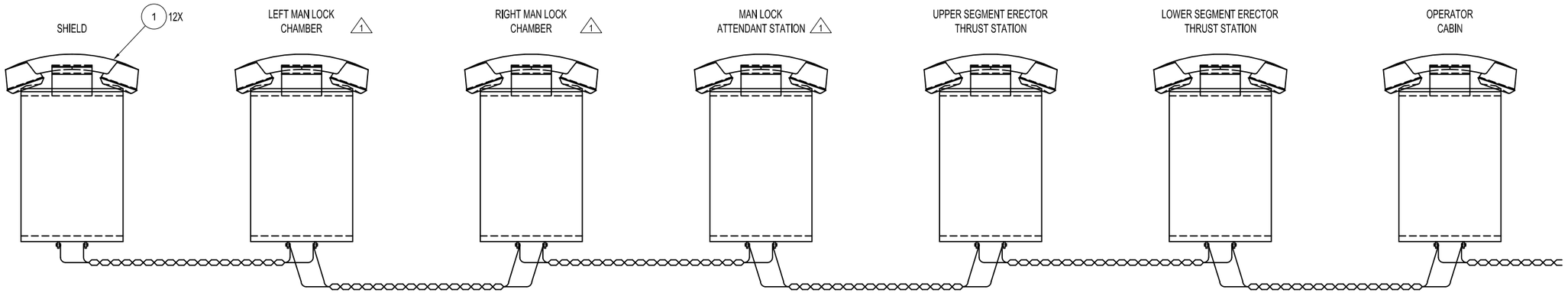

NOTE:

POLARITY DOES NOT NEED TO BE OBSERVED WHEN CONNECTING THE TWISTED WIRES TO THE TELEPHONE TERMINAL POSTS. TELEPHONES ARE SUPPLIED WITH INTERNAL 12V BATTERY.

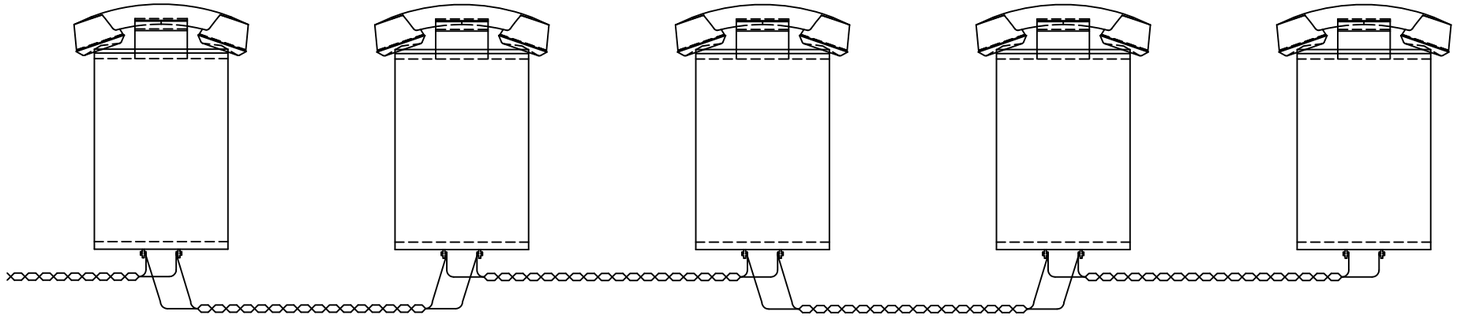

REV	DESCRIPTION	REV'D BY / DATE	APP'D BY / DATE
1	ADDED LEFT & RIGHT MAN LOCK CHAMBER TELEPHONE AND CHANGED MAN LOCK	PMB 6/5/12	DH 6/5/12

PROPRIETARY NOTICE
This information disclosed hereon is the sole property of The Robbins Company and is considered confidential. It shall not be duplicated in full or part, used by, or disclosed to any person, firm or corporation for any purpose except as The Robbins Company (by acceptance this information, recipient agrees to adhere to the foregoing and to return all drawings and prints upon request or when no longer required for the purpose for which they were originally furnished.)

MACHINE	NEXT ASSY
EPB2016-376/377	1046350

UNLESS NOTED ALL DIMS ARE Inch
TOLERANCES UNLESS NOTED
0 - 1" ± 1/64
1" - 5" ± 1/8
5" - 20" ± 1/4
20" + ± 1/2
FRACTIONS 1/16
.X ± .03
.XX ± .015
.XXX ± .005
ANGLES ± 1
SURFACE FINISH 125
THIRD ANGLE PROJECTION
DIMENSIONS IN ( ) ARE REFERENCE
ALL GEOMETRIC DIMENSIONING & TOLERANCING PER ANSI Y14.5-2009

COMMUNICATIONS SYSTEM

SIZE	DWG NO.	REV	SHT	SCALE
D	1046957	1	1 OF 1	1"0"=1'0"

DO NOT SCALE

DRAWN BY	CHECKED BY / APPROVED
P.BRENNAN	P.BRENNAN
DATE 3/27/2012	CHECKED BY/APPROVED 3/27/2012
WEIGHT TOTAL	APPROVED BY D.HOBBS
	DATE 3/27/2012

Robbins

www.TheRobbinsCompany.com

1046957

Dräger

Polytron 2 XP Ex

Transmitter for Catalytic Combustion Sensors

Operating Manual

For Your Safety

Strictly follow the assembly and installation instructions
Any use of the transmitter requires full understanding and strict observation of these instructions. The transmitter is only to be used for the purposes specified here.

Maintenance
The transmitter must be inspected and serviced regularly by trained service personnel at six month intervals (and a record kept.)

Repairs may only be done by trained service personnel.

We recommend that a service contract be obtained with Draeger Service and that all repairs also be carried out by them.

Only authentic Dräger spare parts may be used for maintenance.

Observe Section 4 “Maintenance”.

Use in areas subject to explosion hazards
Equipment or components which have been tested and approved according to the national or European regulations on electrical equipment in areas subject to explosion hazards, may be used only under the conditions specified in the approval.

Modifications of components or the use of faulty or incomplete parts are not permitted.

In the case of repairs to equipment or components of this type, the national regulations must be observed.

To prevent explosions, whenever removing any part of the transmitter with the unit powered, a portable combustible gas monitor should be used to determine that the area is non-hazardous.

Liability for proper function or damage
The liability for the proper function is irrevocably transferred to the owner or operator to the extent that the transmitter is serviced or repaired by personnel not employed or authorized by Draeger Service or if the transmitter is used in a manner not conforming to its intended use.

Dräger cannot be held responsible for damage caused by noncompliance with the recommendations given above. The warranty and liability provisions of the terms of sale and delivery of Dräger are likewise not modified by the recommendations given above.

Draeger Safety, Inc.

Contents

For Your Safety **1**
1 Introduction **4**
1.1 Intended Use 4
1.2 Design 4
2 Operation **5**
2.1 Installation 5
2.1.1 Installation Restrictions 6
2.2 Installation Diagrams 7
2.2.1. Installing Electrical Connections at the Transmitter 7
2.2.1.1 4 to 20 mA Loop Installation 7
2.2.1.2 HART® Multidrop Installation 8
2.2.1.3 RS 485 Multidrop Installation 9
2.2.2 Relay Option 10
2.2.3 Installing Electrical Connections at the Controller 10
2.2.3.1 Connecting the Transmitter to a Controller from Dräger 10
2.2.3.2 Connecting the Transmitter to Other 4 to 20 mA Controllers 10
2.2.3.3 Connecting Several Transmitters to Other HART® Multidrop Controllers 11
2.2.3.4 Connecting Several Transmitters to a RS 485 Interface 12
2.2.4 RS 485 Interface Setup 13
2.3 Initial Operation 18
2.3.1 Analog Signals 18
2.3.2 The Display 19
3 Menu Navigation **20**
3.1 Menu Structure 21
3.1.1 Maintenance Menu 21
3.1.2 Configuration Menu 22
3.2 Entering Passwords 23
3.3 Entering Numbers 24
3.4 Entering Text 24
3.5 Entering Decisions 24
3.6 Entering Options 25
3.7 Handling Messages 25
4 Maintenance Menu **26**
4.1 Diagnostics 26
4.1.1 Display Faults 27
4.1.2 Display Warnings 28
4.1.3 Display Date of Last Calibration 29
4.1.4 Display Date for Next Calibration 29
4.1.5 Display Temperature of Sensor 29
4.2 Calibration 30
4.2.1 Zero Point Calibration 30
4.2.2 Sensitivity Calibration 31
4.3 Sensor Replacement 33
4.4 Setting 4 to 20 mA Analog Interface 34
4.4.1 Set Analog Output to a Value Between 3 and 22 mA 34
4.4.2 Set Analog Output to a Value Proportional to a Gas Concentration 34
4.4.3 Output of a Fault Signal 35

4.4.4 Output of a Warning Signal ... 35
4.4.5 Output of a Maintenance / Calibration Signal ... 35
4.5 Set Date and Time ... 36
4.5.1 Changing the Date ... 36
4.5.2 Changing the Time ... 36
4.6 Display Sensor-Specific Information ... 37
4.7 Display Transmitter-Specific Information ... 37
4.8 Relay Test ... 38
5 Configuration Menu ... 39
5.1 Setting Language ... 39
5.2 Initialization of Factory-Set Values ... 39
5.3 Configuring Gas Type, Units and Measuring Range ... 40
5.4 Configuring Calibration Parameters ... 41
5.4.1 Configuring Calibration Gas ... 41
5.4.2 Configuring Calibration Interval ... 41
5.5 Sensor Lock ... 41
5.6 Switching Measured Value Display On/Off ... 42
5.7 Switching Special Signal On/Off ... 42
5.8 Configuring Special Signals ... 43
5.8.1 Switching the Warning Signal On/Off ... 43
5.8.2 Warning Level ... 43
5.8.3 Warning Repeats ... 44
5.8.4 Warning LoStrobe ... 44
5.8.5 Maintenance Low Level ... 44
5.8.6 Maintenance High Level ... 45
5.8.7 Maintenance Level Repeats ... 45
5.8.8 Maintenance LoStrobe ... 45
5.9 Changing the Password ... 46
5.9.1 Changing the Maintenance Password ... 46
5.9.2 Changing the Configuration Password ... 46
5.10 Communication ... 46
5.10.1 Configuring Polling Address ... 47
5.10.2 Read Unique Identifier ... 47
5.10.3 Configuring Tag ... 47
5.11 Programming the Relays ... 48
5.11.1 Set the Alarm Settings for Alarm 1 ... 48
5.11.2 Set the Alarm Settings for Alarm 2 ... 49
5.11.3 Set Mode of Acknowledging Alarms ... 50
6 Technical Information ... 51
6.1 Approvals ... 51
6.2 Signal Transmission to Central Control Unit ... 51
6.3 Voltage of Power Supply ... 51
6.4 Physical Specifications ... 51
6.5 Environmental Parameters ... 52
6.6 Relay Specification (optional) ... 52
6.7 Ambient Influences ... 52
7 Default Values ... 53
8 Sensor Principle ... 54
8.1 Operating Principle ... 54
8.2 Contaminating Gases ... 54
9 Order Information ... 55
9.1 Calibration Supplies ... 55
9.2 Replacement Parts ... 55
9.3 Accessories ... 56
Addresses ... 63

1 Introduction

1.1 Intended Use

The Polytron 2 XP Ex continuously monitors combustible gases and vapors in ambient air. The unit is housed in a rugged, metal, explosion-proof enclosure for indoor and outdoor applications. The transmitter can be connected through a sealed conduit or suitably approved cable gland to a Dräger monitoring system or a Programmable Logic Controller (PLC) to warn of hazardous conditions.

The Polytron 2 XP Ex can be operated by the internal keys (declassified area), by the infrared remote control or HART hand held terminal for calibration and configuration. Using the infrared remote control or HART hand held terminal, a non-intrusive, one-man calibration can be performed without declassifying the area. With the optional alarm relay configuration, the transmitter can be operated as a stand-alone unit.

The transmitter display shows warnings (e.g., maintenance required) or instrument faults. The transmitter also has a special calibration mode which inhibits alarm relays, and provides a unique output signal to prevent false alarms.

The Polytron 2 XP Ex is intended to be used in the oil and gas industry (both on and off shore), chemical, automotive and other general industrial areas where reliable, accurate gas monitoring is required.

1.2 Design

The Polytron 2 XP Ex is designed to be powered by and interfaced with a Dräger Polytron, Regard or QuadGard monitoring system. It can be situated up to 10,000 feet (3000 m) from the interface/controller, using a 16 AWG (1.5 mm^2) three-conductor shielded cable. See Section 2.2.3, Installing Electrical Connections at the Controller for more information.

The transmitter can also be connected to any monitoring/controller system if it accepts: industry standard 4 to 20 mA input, bi-directional communication via HART or bi-directional communication via RS 485, and provides 10 to 32 VDC.

The transmitter is designed to be installed in permanent locations and is approved for use in hazardous, classified areas (Class I, Div 1, Groups B, C, D and EEx d IIC T6).

® Polytron is a registered trademark of Dräger Sicherheitstechnik.

® HART is a registered trademark of HCF, Austin, Texas, USA

2 Operation

2.1 Installation

To ensure overall system performance and effectiveness, the selection of an installation site for the transmitter is the most important factor. Considerable thought must be given to every detail of installation, particularly:

- The local, state, federal codes and requirements that govern the installation of gas monitoring equipment.
- The electrical codes that govern the routing and connection of electrical power and signal cables to gas monitoring equipment.
- For non-conduit installations, an approved cable gland to EEx d IIC must be used (e.g. Hawke A501/421/A or equivalent). It might be necessary to connect the shield of the cable to the cable gland and to the controller in order to improve RFI immunity. Entry thread size is M20 or 1/2" NPT. Cable size is 11.0mm minimum and 14.3mm maximum.
- The full range of environmental conditions to which the transmitters will be exposed.
- The physical data of the gas or vapor to be detected.
- The specifics of the application, (e.g. possible leaks, air movement/draft etc.)
- The degree of accessibility required for maintenance purposes.
- The types of optional and accessory equipment that will be used with the system.
- Any other limiting factors or regulations that would affect system performance or installations.

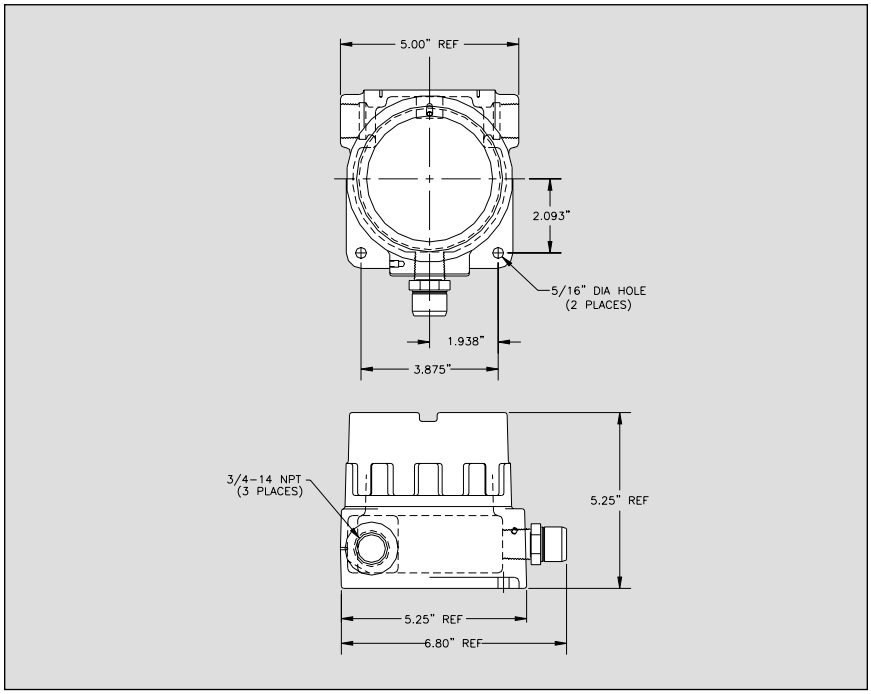

Mounting diagram

2.1.1 Installation Restrictions

1. The transmitter must have between 10 to 32 VDC at the unit. This ultimately determines the distance the transmitters can be mounted from the controller/ monitor or power supply. The unit accepts wire sizes of 16 to 22 AWG (0.5 to 1.5 mm^2). Use at least a three-conductor, shielded cable.
2. The transmitters must not be exposed to radiant heat that will cause the temperature to rise above 167 °F (75 °C) within the enclosure. The use of a reflecting shield is recommended.
3. Preferably mount in vertical position (sensor pointing downward).
4. The enclosure is weatherproof and suitable for outdoor installation. The use of the optional splash guard is recommended to protect the sensor from water, dust and wind.
5. Each transmitter must be installed and operated in an environment that conforms to the specifications in Section 6, Technical Information.

NOTE

The transmitter may be equipped with a dust plug at the conduit entry. This plug is not meant to be watertight, and must be removed before connecting the unit to a sealed conduit.

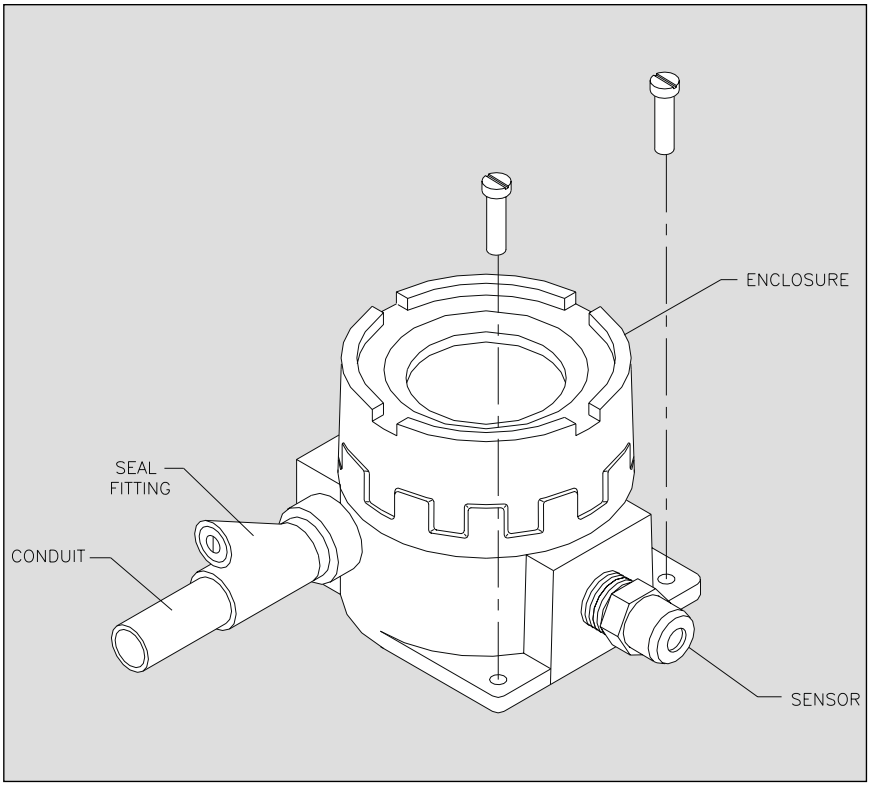

Installation of transmitter

2.2 Installation Diagrams

2.2.1. Installing Electrical Connections at the Transmitter

Only properly trained personnel should route and connect the electrical installation. Follow all applicable regulations.

2.2.1.1 4 to 20 mA Loop Installation

- Unscrew cover from transmitter.
- Lift the handle and pull the bucket with the electronics out of the enclosure.
- Turn the bucket over and pull off the 5-pin connector.
- Simply connect the three wires for power and signal to the appropriate terminal, as indicated on the label on the bottom of the bucket.
- Plug connector back into socket.
- The cable shielding should be connected at the controller only.
- Place the bucket back into the enclosure.
- Screw the cover back on, until it is seated.

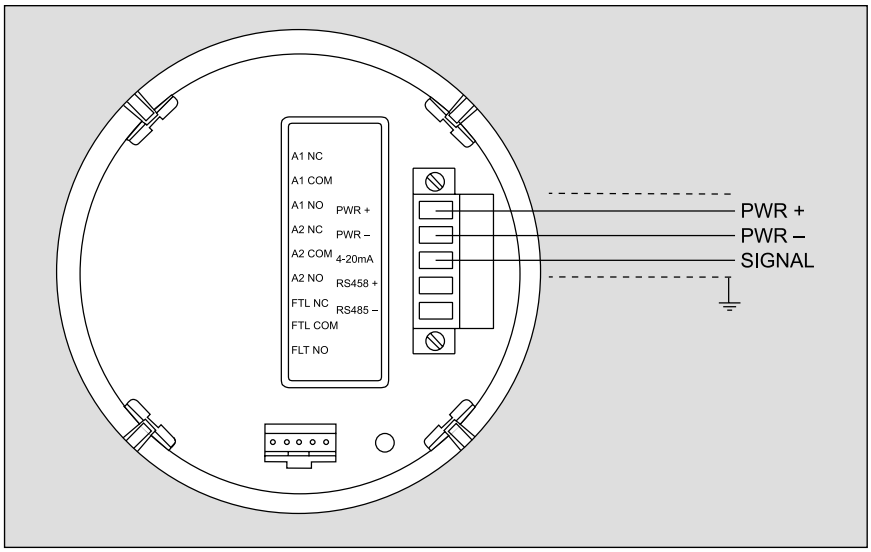

Bucket bottom; electrical connections; 4 to 20 mA loop installation

2.2.1.2 HART® Multidrop Installation

- Unscrew cover from transmitter.
- Lift the handle and pull the bucket with the electronics out of the enclosure.
- Turn the bucket over and pull off the 5-pin connector.
- Simply connect the incoming and outgoing three wires for power and signal to the terminal, as indicated on the label on the bottom of the bucket.
- Plug connector back into socket.
- The cable shielding should be connected at the controller only.
- Place bucket back into the enclosure.
- Screw cover back on, until it is seated.

NOTE

All transmitters need to be setup individually. Transmitters on the same multidrop line must each be configured to a different "polling address" which is between "1" and "15" (Section 5.9, Communication). The address numbers should start with "1", be consecutive, and may not be used twice. The number of transmitters on one loop may not exceed 15 and is dependent on the power supply and cable used. The permissible loop resistance of the cable is shown in Section 2.2.3, Installing Electrical Connections at the Controller.

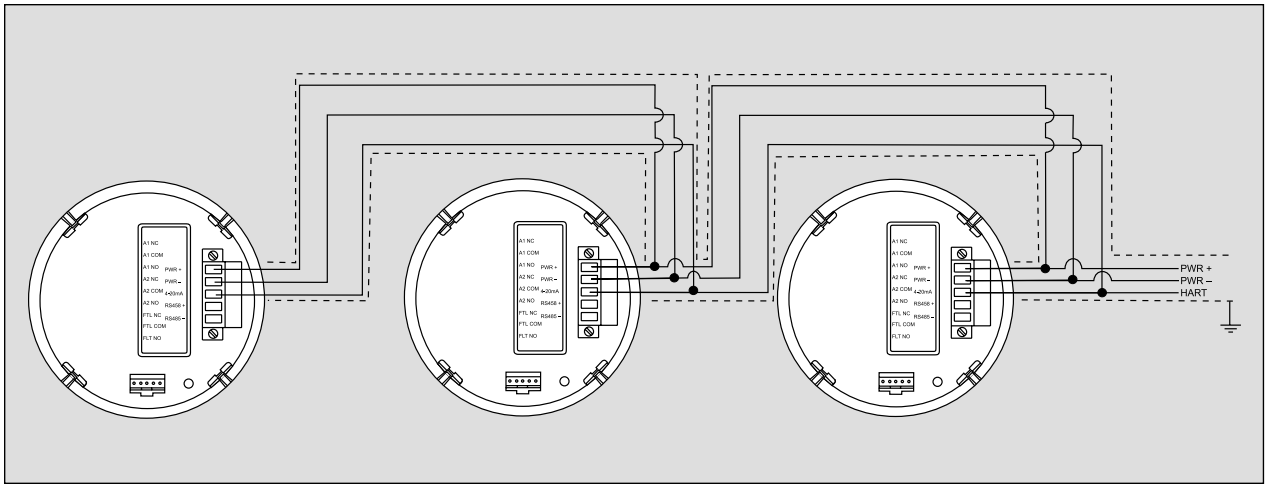

Bucket bottom; electrical connections; HART® multidrop installation

2.2.1.3 RS 485 Multidrop Installation

- Unscrew cover from transmitter.
- Lift the handle and pull the bucket with the electronics out of the enclosure.
- Turn the bucket over and pull off the 5-pin connector.
- Simply connect the incoming and outgoing four wires for power and signal to the terminal, as indicated on the label on the bottom of the bucket.
- Plug connector back into socket.
- The cable shielding should be connected at the controller only.
- Place bucket back into the enclosure.
- Screw cover back on, until it is seated.

NOTE

The maximum number that can be connected on one twisted-pair line is 32 (Section 2.2.3, Installing Electrical Connections at the Controller).

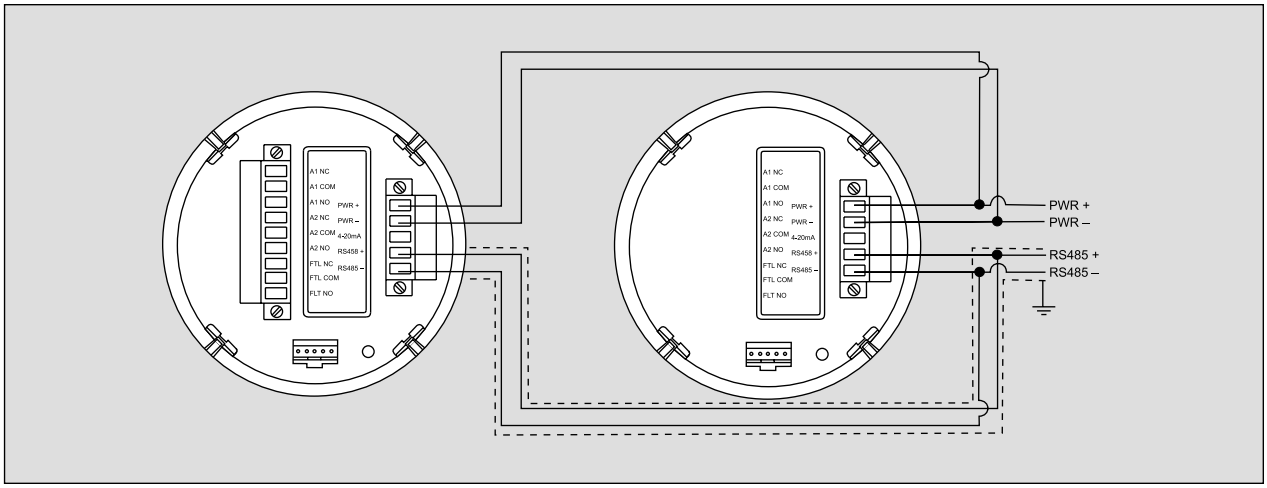

Bucket bottom; electrical connections; RS 485 multidrop installation

2.2.2 Relay Option

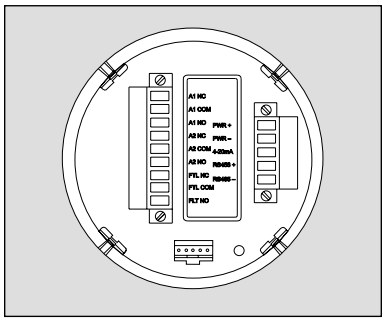

Bucket bottom;
electrical connections with relay option

If the relay option has been purchased, the wires for the alarm devices will be connected to the 9-pin connector.

- Turn the bucket over and pull off the 9-pin connector.
- Simply connect the wires for alarm 1, alarm 2 and fault to the terminal, as indicated on the label on the bottom of the bucket.

During normal operation, the relays are energized. This provides “fail-safe” operation. The terminals indicated on the label are shown in the normal operation mode.

- Plug connector back into socket.
- To make sure that a warning or a fault is recognized - *without having to look at the display* - you must connect an alarm device to the fault relay.

2.2.3 Installing Electrical Connections at the Controller

- Connect the shield of the wires to the earth ground of the controller (e.g. chassis, ground busbar, etc.)

2.2.3.1 Connecting the Transmitter to a Controller from Dräger

(e.g. Regard, QuadGard or Polytron)

For hook-up information, please refer to the manual which was included with your Dräger controller.

2.2.3.2 Connecting the Transmitter to Other 4 to 20 mA Controllers

The cable resistance (loop) must not exceed 800 Ω when powered by 24 volts.

When HART digital communication is to be used, the load resistance of the supply unit must be between 230 Ω and 500 Ω.

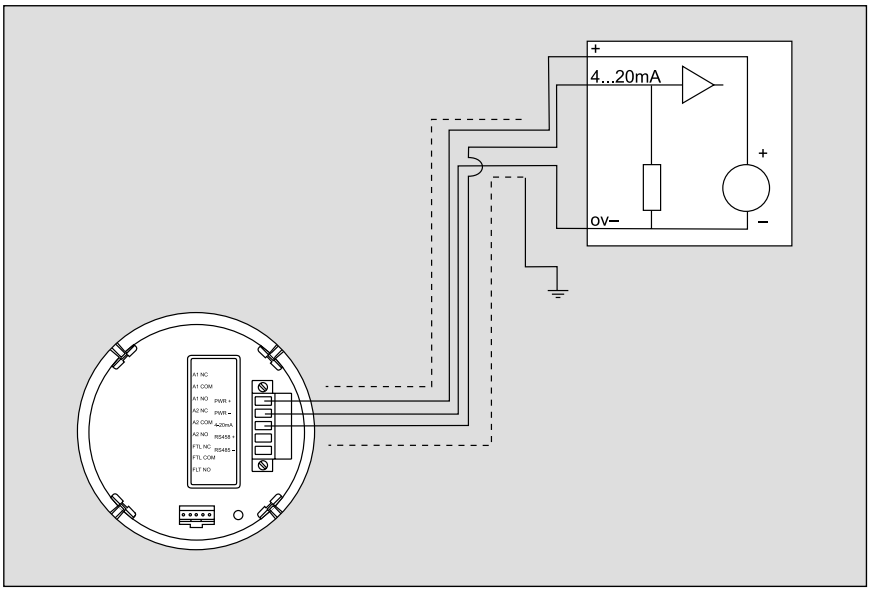

Installing electrical connections at the controller

2.2.3.3 Connecting Several Transmitters to Other HART® Multidrop Controllers

The information that can be inquired by other HART devices is only the top level HART protocol header.

Up to a maximum of 15 transmitters can be daisy-chained on one 3-wire cable.

The maximum permissible loop resistance of the cable, plus load resistor is 500 Ω. See Section 6, Technical Information for transmitter current requirements and inrush current ratings.

For more detailed information on the industry standard HART commands, please contact the:

HART Communication Foundation
9390 Research Boulevard
Suite I-100
Austin, Texas 78759

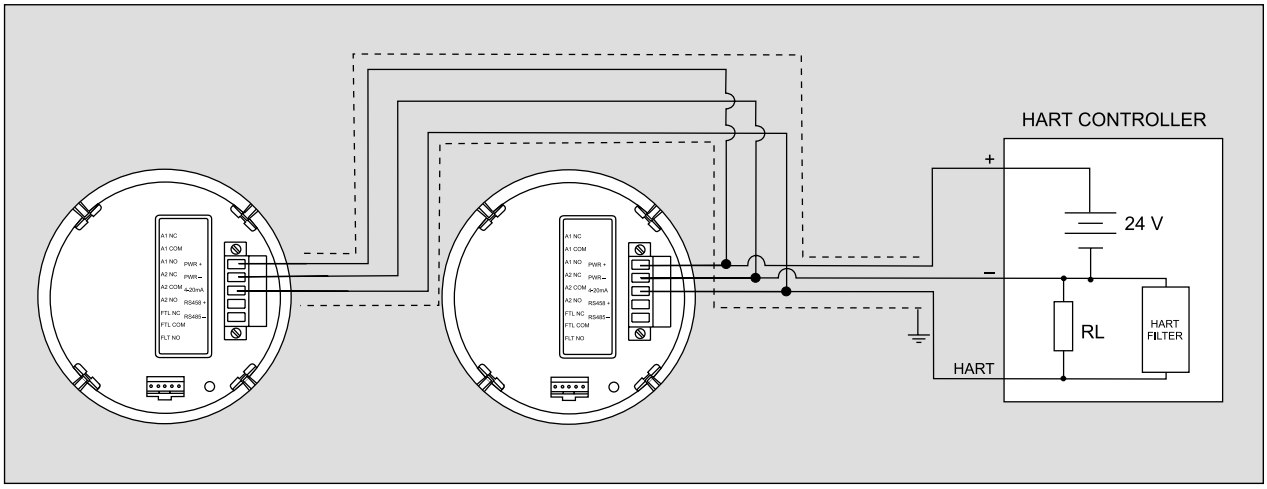

Bucket bottom; electrical connections; HART® multidrop installation; general HART® controller

2.2.3.4 Connecting Several Transmitters to a RS 485 Interface

Polytron 2 XP Ex can be connected to a RS 485 bus to communicate data between the transmitter and a PLC or DCS. This bi-directional communication uses HART commands, which will return the actual gas concentration, the engineering units and the type of gas to be detected. In addition, the status flag for warnings and faults can be interrogated. The maximum number that can be connected on one twisted pair line is 32. With increasing number of transmitters on the line, the cycling time will increase. E.g. 32 transmitters on one line, cycling time 16 seconds.

It is important that the power supply driving the transmitter and the RS 485 interface have the same ground. For more detailed information on the industry standard HART commands, please contact the

HART Communication Foundation
9390 Research Boulevard
Suite I-100
Austin, Texas 78759

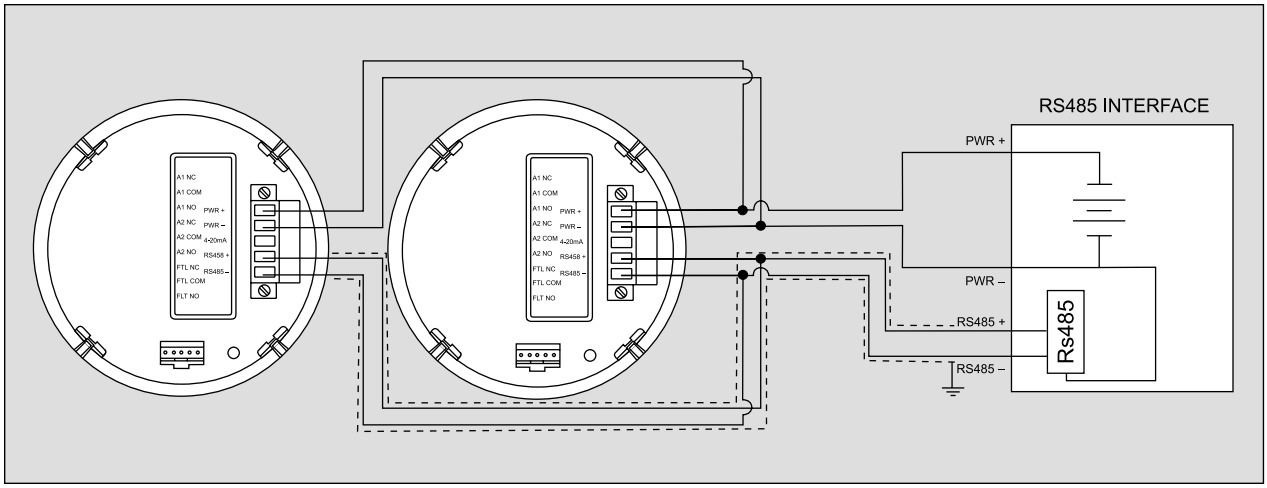

Bucket bottom; electrical connections; RS 485 multidrop installation

2.2.4 RS 485 Interface Setup

In order to communicate with the transmitter the RS 485 Protocol is 1200 baud, 8 bit, odd parity, 1 stop bit.

RS 485 Communication

To interrogate and retrieve data from the transmitter, defined HART commands in hexadecimal bytes have to be sent and received.

The messages for the HART commands have the following structure:

PREAMBLE	START CHARACTER	ADDRESS	COMMAND	BYTE COUNT	[STATUS]	[DATA]	CHECKSUM

The number of bytes per substructure may vary. The substructure in brackets [ ] might not be used, depending on the command sent. Some of the substructures will not be described in detail in this manual, because they are necessary for the command but do not contribute any additional information for the user at this time.

Calculate Checksums

The checksum byte contains the exclusive-or of all bytes that precede it in the message starting with the start character, e.g.:

START CHARACTER	ADDRESS	COMMAND	BYTE COUNT	[STATUS]	[DATA]

CAUTION

In the following sections, all bytes printed in Italic will vary from transmitter to transmitter.

A) Interrogate the Unique Identifier

Each transmitter has a unique identifier, which is necessary to establish communication between the PLC/DCS and a specific transmitter. To retrieve this unique identifier, each transmitter must be interrogated separately during setup.

Send command:

FF FF FF FF FF	02	80	00	00	82

Receive answer, e.g.:

FF FF FF FF FF	06	80	00	0E	*00 40*	*FE 52 F7 05 05 C1 FF 18 00 E4 E1 EB*	*5B*

The returned string contains the unique identifier. It can be found at byte positions 21, 22 and 23.
In the example the unique identifier is E4 E1 EB.

B) Interrogate the Actual Gas Concentration and Relay Status

To interrogate the actual gas concentration at the transmitter, send command, e.g.:

FF FF FF FF FF	82	92 F7 *xx xx xx*	80	00	*yy*

Where xx xx xx is the unique identifier of the transmitter, and yy is the calculated checksum byte.
In the example, the unique identifier is E4 E1 EB, and thus the checksum computes to 89.

The received hex-string will be similar to:

FF FF FF FF FF	86	92 F7 *xx xx xx*	80	08	*00 40*	*B3 42 4C 00 00 00*	*yy*

Where xx xx xx is the unique identifier and yy the newly calculated checksum.

The actual gas concentration can be retrieved out of the four bytes, starting at byte 17. These four bytes (e.g. 42 4C 00 00) represent a floating point number in IEEE 754 format. In the example, the string 42 4C 00 00 converts to 51. The number of decimals displayed in the display is in bit 20. In the example, this number is 0.

The status of the relays can be determined by decoding byte 16 in accordance with the following table.

The meaning of the bits of byte 16 are:

0 x 80	na
0 x 40	na
0 x 20	Alarm 2 condition met
0 x 10	Alarm 1 condition met
0 x 08	Fault LED is illuminated
0 x 04	Fault relay is activated
0 x 02	Alarm 2 relay is activated
0 x 01	Alarm 1 relay is activated

In the example, B3 indicates that Alarm 1 and 2 conditions are met and the corresponding relays, A1 and A2 are activated. "Alarm condition met" means that the actual gas concentration is above the alarm set point. If an alarm has been acknowledged, the relay is not activated regardless if the criteria for the alarm condition is met.

C) Interrogate the Selected Gas Name and Engineering Units

To interrogate the engineering units, send command, e.g.:

FF FF FF FF FF	82	92 F7 *xx xx xx*	84	00	*yy*

Where xx xx xx is the unique identifier of the transmitter, and yy is the calculated checksum byte.

The received hex-string will be similar to:

FF FF FF FF FF	86	92 F7 *xx xx xx*	84	16	*00 40*	*43 48 34 20 20 20 20 20 20 20 20 20 25 4C 45 4C 20 08 3B 14 F2 09*	*yy*

Where xx xx xx is the unique identifier and yy the newly calculated checksum.

The gas name can be retrieved out of the eleven bytes, starting at byte 16. These eleven bytes (e.g. 43 48 34 20 20 20 20 20 20 20 20) represent ASCII text in hex format. In the example, the string 43 48 34 20 20 20 20 20 20 20 20 converts to CH4.

The engineering units can be retrieved out of the five bytes, starting at byte 27. These five bytes (e.g. 25 4C 45 4C 20) represent ASCII text in hex format. In the example, the string 25 4C 45 4C 20 converts to %LEL.

D) Interrogate the Status of the Transmitter

To interrogate the status, send command, e.g.:

FF FF FF FF FF	82	92 F7 *xx xx xx*	30	00	*yy*

Where xx xx xx is the unique identifier of the transmitter, and yy is the calculated checksum byte.

The received hex-string will be similar to:

FF FF FF FF FF	86	92 F7 *xx xx xx*	30	1B	*00 40*	*00 00 00 00 00 00 00 00 00 00 00 00 00 00 00 00 00 00 00 00 00 00 00 00 00 00 00*	*yy*

Where xx xx xx is the unique identifier and yy the newly calculated checksum.

The status can be retrieved out of the bytes in the data subcommand. During normal operation, all bytes are '00'.

D *i) System Errors*

The system errors can be retrieved out of the six bytes, starting at byte 16.
These six bytes (e.g. 00 00 00 00 00 00) represent hex format.

Value/ Byte	**16**	**17**	**18**	**19**	**20**	**21**
0x80	E1	E3	E1, E3	E2	na	na
0x40	E1	E3	E3	E2	na	na
0x20	E1	E3	E3	E1, E3	na	na
0x10	na	E9	E3	E1	E1	na
0x08	na	E2	E3	E1	E4	na
0x04	E1	E2	na	E1	E2	na
0x02	E1	na	na	E1	E4	na
0x01	na	na	na	E1	E8	na

To read the plain text for the error messages see sub-section D vi.

D *ii) Measurement Errors*

The measurement errors can be retrieved out of the five bytes, starting at byte 30.
These five bytes (e.g. 00 00 00 00 00) represent hex format.

Value/ Byte	**30**	**31**	**32**	**33**	**34**
0x80	E7	E1	E5	na	E5
0x40	E7	E1	E5	na	E5
0x20	E3, E7	E1	na	na	E5
0x10	na	E1	E5	na	na
0x08	E7	E5	E5	na	E5
0x04	E6	E5	E5	na	E5
0x02	E3	E5	E5	na	E5
0x01	na	E1	E5	E1	E5

To read the plain text for the error messages see sub-section D vi.

D *iii) Internal Status*

The internal status can be retrieved out of byte 35.
This byte (e.g. 00) represents hex format.

Value/ Byte	**35**
0x80	Password entered, Man Machine Interface activated
0x40	Any HART command mode is activated
0x20	na
0x10	na
0x08	Command mode, no gas value available
0x04	Command mode, no gas value available
0x02	Command mode, no gas value available
0x01	na

D *iv) Measurement Status*

The measurement status can be retrieved out of byte 37.
This byte (e.g. 00) represents hex format.

Value/ Byte	**37**
0x80	Sensor warming up
0x40	No gas value available, unit disabled
0x20	No valid database, no gas value available
0x10	na
0x08	na
0x04	na
0x02	na
0x01	na

D *v) System Warnings*

The system warnings can be retrieved out of the three bytes, starting at byte 38.
These three bytes (e.g. 00 00 00) represent hex format.

Value/ Byte	**38**	**39**	**40**
0x80	W8	na	W3
0x40	W8	na	W3
0x20	na	W5	na
0x10	na	W5	na
0x08	na	W4	W2
0x04	W6	W4	W1
0x02	W6	W4	W2
0x01	W7	W4	W2

To read the plain text for the system warnings see sub-section D vi.

D *vi) Error and Warning Messages*

E1	Microprocessor fault	W1	Calibration interval expired
E2	Microprocessor EEPROM data not valid	W2	Calibration invalid
E3	Sensor EEPROM data not valid	W3	End of sensor life
E4	Supply voltage too low	W4	Major measurement error
E5	Pre-amplifier fault	W5	Sensor warming up
E6	Sensor failed self-test	W6	Set clock
E7	Calibration data incorrect	W7	Change lithium battery
E8	Analog interface fault	W8	Analog interface not calibrated
E9	Sensor lock activated		

2.3 Initial Operation

• Switch power supply on.

The transmitter will begin a warm-up period. The message ‘Sensor ready in 1 minute...’ will be shown on the display.

Next, a second warm-up period begins. The value of the detected concentration is displayed, and an ≫ i ≪ is shown in the upper right hand corner of the display. The ≫ i ≪ indicates that the sensor is now operating at approximately 4 times its specified accuracy interval.

During the two warm-up periods the instrument emits a maintenance signal, if configured (Section 2.2.3, Installing Electrical Connections at the Controller). After both warm-up periods have expired, the maintenance signal will cease and the warning will no longer be displayed.

NOTE

At extremely high or low temperatures, the warm-up period may last longer.

• Check the calibration and, if necessary, perform calibration (Section 4.2, Calibration).

• Check the signal transmission to the monitor/controller, and verify that the alarms can be tripped (Section 4.4, Setting 4 to 20 mA Analog Interface).

2.3.1 Analog Signals

Available in Analog Mode (4 to 20 mA) Only

The current output of the transmitter during normal operation is between 4 and 20 mA and is proportional to the detected concentration.

Polytron 2 XP Ex uses different current values to indicate various modes of operation

Current	Meaning
4mA	Zero point
20 mA	Full scale of measuring range
< 3.2mA	Fault
3.8mA ... 4mA	Sensor drift below zero
20mA ... 20.5mA	Measuring range exceeded
> 23mA	Fault
1 Hz modulation between 3 and 5mA	Signal for maintenance mode
Every 10 seconds for 1 second 3mA	Warning signal (configured default: OFF), check instrument

2.3.2 The Display

– In measurement mode, the display shows concentration, unit of measurement and gas type.

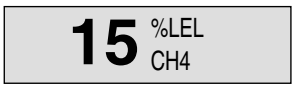

The following special symbols may also be displayed:

– When the measuring range of the sensor has been exceeded ≫ ↑↑↑↑ ≪

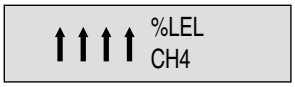

– When a warning message is available ≫ i ≪
(Section 4.1.2, Display Warnings).

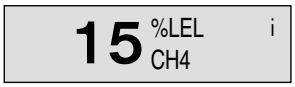

– When a fault has been detected ≫ ϟ ≪
(Section 4.1.1, Display Faults).

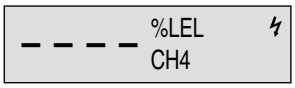

To display the error codes in measurement mode:
Press and hold down the [ESC] key: two rows of number/letter pairs will be displayed. During normal operation (no fault or warning), all error codes will be 00. The error codes enable Dräger Service to determine the cause for any message in more detail and define a remedy.

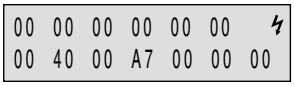

Information about the status of the analog interface may also be displayed in the upper right corner of the display:

– When a maintenance signal is transmitted to the controller, instead of a measured value: ≫ ⇕ ≪

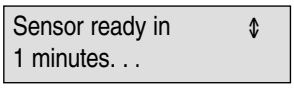

– When the measured value is too small for analog transmission: ≫ ↓ ≪

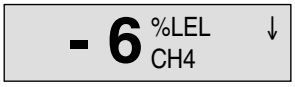

– When the measured value is too large for analog transmission: ≫ ↑ ≪

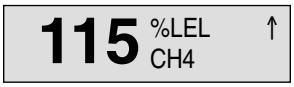

– When the analog interface is set by the user, to a defined value (fixed current, fault, maintenance or multidrop): ≫ ♦ ≪

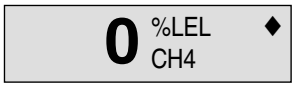

– When the first alarm (optional) has tripped: ≫ ' ≪

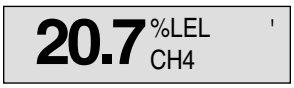

– When the second alarm (optional) has tripped: ≫ ,', ≪

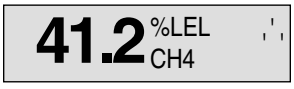

3 Menu Navigation

Choice of methods:
– Keypad and display of the transmitter
– Infrared remote control and display of the transmitter
– HART-compatible hand-held terminal
– HART-compatible controller
– RS 485

There are six keys on the transmitter and the infrared remote control:
– four cursor keys (↑, ↓, ←, →)
– one Escape key (ESC)
– one Enter key (↵)

to change between:
– menu items / functions
– numbers / letters at cursor position
– default values
use keys [↑], [↓]

to change the cursor position:
use keys [←], [→]

to acknowledge:
– inputs
– messages
use the [↵] key

use the [ESC] key to:
– return to previous menu
– exit a function without accepting changes

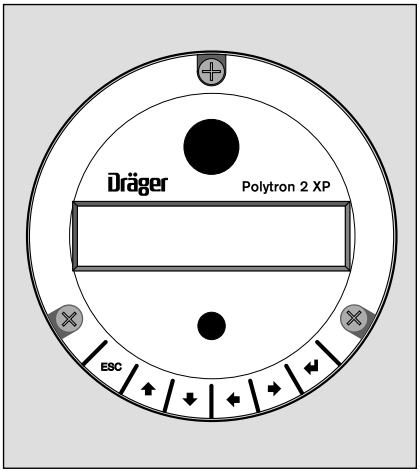

transmitter keypad

infrared remote control

3.1 Menu Structure

There are two main submenus in the menu structure: MAINTENANCE and CONFIGURATION.

NOTE

Since maintenance might be performed by staff other than those who configure the system, Polytron 2 XP Ex has a ***different*** *password to access* ***each*** *group of functions. However, the password for the submenu configuration also gives the user access to the submenu maintenance.*

The default settings of the passwords are:

- MAINTENANCE 1
- CONFIGURATION 2

To change a password see Section 5.8, Changing the Password.

3.1.1 Maintenance Menu

This level gives access to a number of functions for regular maintenance of the transmitter. It is suggested that access be given to service department personnel.

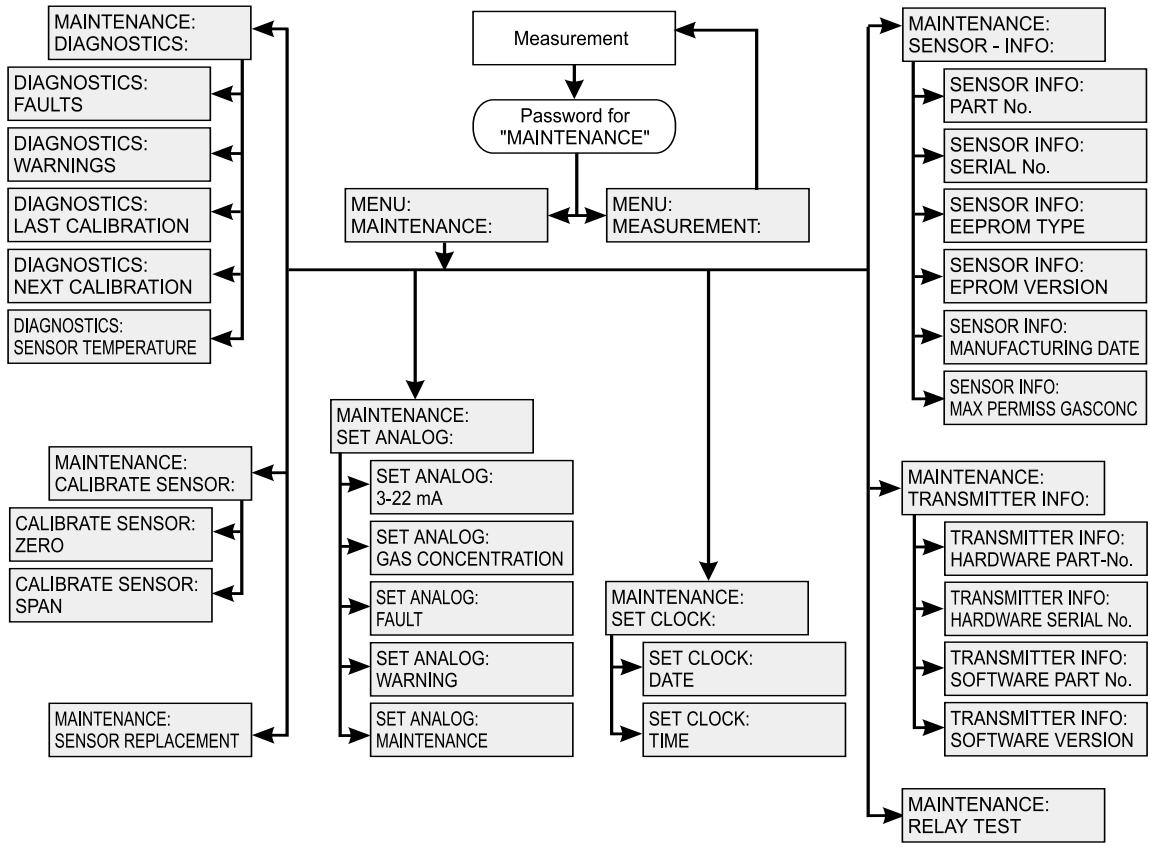

3.1.2 Configuration Menu

This level allows the user to change sensor parameters and to configure the transmitter. It is suggested that access be given to authorized personnel in the measurement and control or health and safety departments. Both the maintenance and the configuration menus can be accessed with the configuration password.

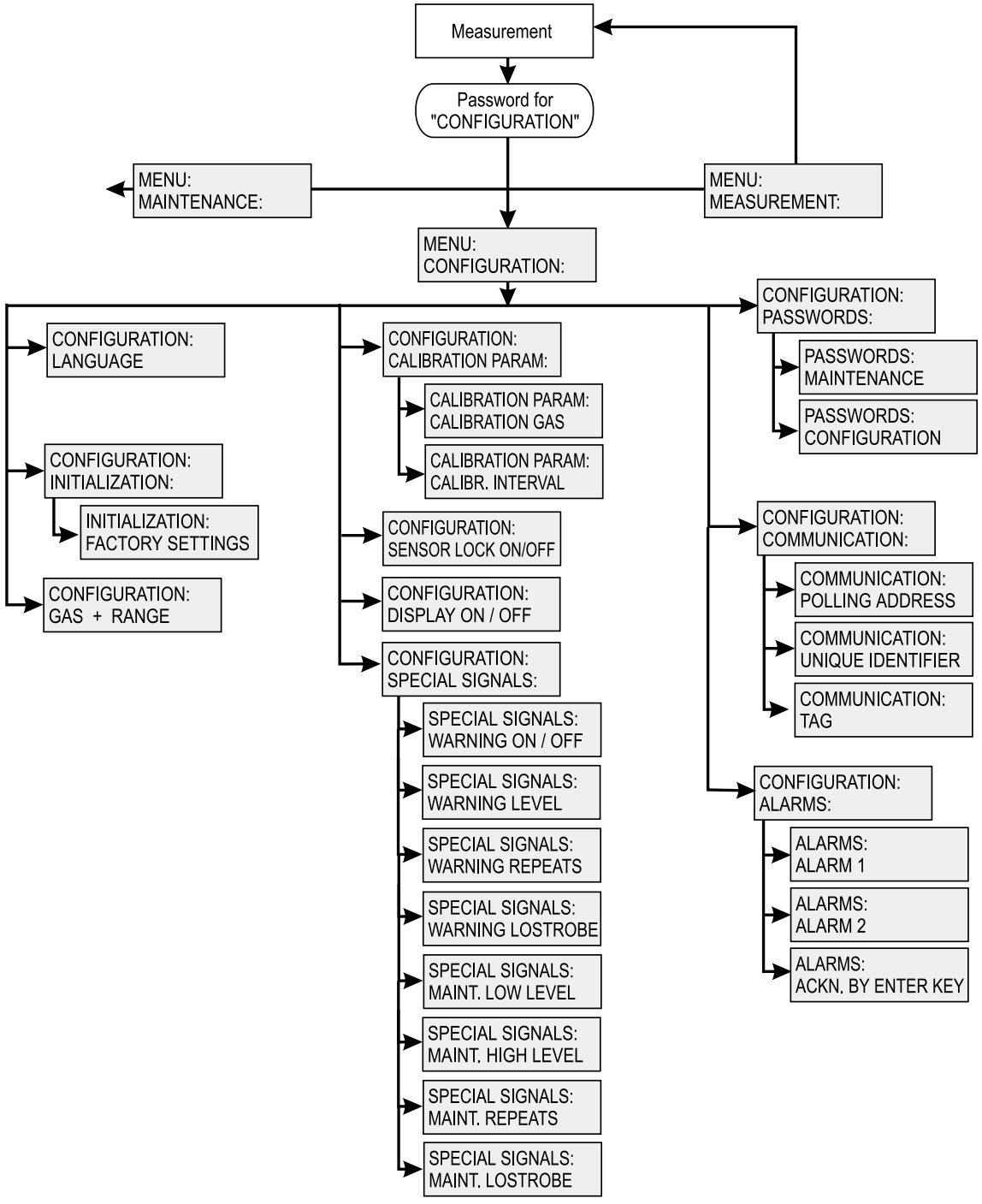

3.2 Entering Passwords

Display during normal measurement mode, e.g.:

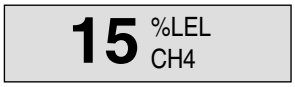

- Press the [↵] key and the display changes to password entry:

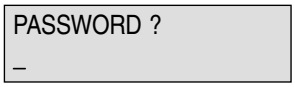

- Enter password:
  (1) to change number/letter use the [↑] and [↓] keys
  (2) to change the position of cursor use the [→] key and enter next number/letter.
  Continue until all numbers/letters of the password are entered: e.g. the default password for maintenance:

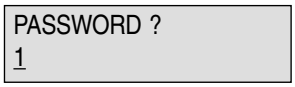

- Press the [↵] key, instrument changes to menu mode:

The default settings of the passwords are:

- MAINTENANCE 1
- CONFIGURATION 2

To change a password see Section 5.8, Changing the Password.

NOTE

The instrument will continue to monitor the concentration and give a 4 to 20 mA output (RS 485, HART) while navigating through and executing most of the submenu features.

- Depending on the hierarchy level of the password, access for the following menus can be selected, using the [↑] or [↓] key.
  Selection: MEASUREMENT, MAINTENANCE or CONFIGURATION
- Press the [↓] key to change the menu.

- Press the [↵] key, to select the menu, e.g.:

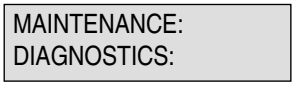

- Use the [↑] or [↓] keys, to navigate within the submenus, e.g.:
- Press the [↵] key, to select a function. The different functions in the maintenance and configuration menus are described in detail below.

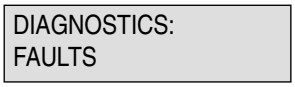

- Press the [↵] key, to end a function.

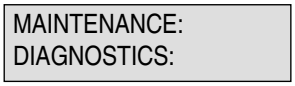

- Press the [ESC] key to return to the next higher menu level, e.g.:

When pressing the [ESC] key several times, the instrument will go to the top level (measurement menu).

- To return to the measurement mode, press the [↵] key once, and the instrument will display the currently detected value, e.g.:

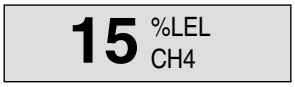

3.3 Entering Numbers

Gas concentration ?
40.0 %LEL

For some of the functions it is necessary to enter numbers. Whenever such an entry is required, the end of the first line in the display will show a question mark. At the same time the second line displays the last entry with a blinking cursor under one of the numbers, e.g.:

- Use the [←] or [→] keys to change the cursor position.
  It will skip over any decimal point.
- Use the [↑] or [↓] keys to change the number at the cursor position.
  Entries which do not make sense, such as ≫.1≪, ≫-2-.22≪, ≫-.3≪, ≫44.-4≪ will not be accepted.

  Keeping a key pressed is regarded as repeated activation of that key.
- Press the [↵] key and the number will be accepted, if it is within the permissible range. If an entry lies outside that range a warning message will be displayed.
- Press the [↵] key to acknowledge message and the display will return to the previous setting, so the entry can be corrected.

3.4 Entering Text

PASSWORD ?
DAVID

For some of the functions it is necessary to enter text. Whenever such an entry is required, the end of the first line in the display will show a question mark. At the same time the second line displays the last entry with a blinking cursor under the last letter of the text, e.g.:

Exception: when entering a password while in measurement no text will be displayed. The second line is blank.

- Use the [←] or [→] keys to change the cursor position.
- Use the [↑] or [↓] keys to change a letter at cursor position.

  Pressing the [↑] or [↓] key before pressing the [←] or [→] key will delete the whole text. Keeping a key pressed is regarded as repeated activation of that key.
- Press the [↵] key to accept the entry.

3.5 Entering Decisions

100 correct ?
Y / N

For some of the functions it is necessary to enter a decision. Whenever such an entry is required, the end of the first line in the display will show a question mark. At the same time the second line displays the options. They are separated by ≫/≪ . The cursor is on the “safe” position, where no changes would be accepted, e.g.:

- Use the [←] key to change the cursor position.
- Press the [↵] key to accept the decision.

3.6 Entering Options

For some of the functions it might be necessary to choose an option. Whenever such a situation occurs, the first line in the display will show a question mark. At the same time, the second line shows the last selection. The cursor is **not** shown.

- Use the [↑] or [↓] key, to select a different option, e.g.:

  Keeping a key pressed is regarded as repeated activation of that key.
- Press the [↵] key to accept the selected option.

3.7 Handling Messages

Within some functions, messages are issued. They are identified by an exclamation point at the end of the text, e.g.:

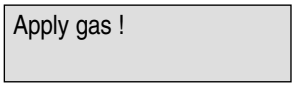

- Press the [↵] key to acknowledge message.

4 Maintenance Menu

The maintenance menu contains all functions which are necessary for regular maintenance of the transmitter. There are various submenus within the maintenance menu. Most of the submenus also contain a number of functions (Section 3.1, Menu Structure).

Selecting submenus:

MENU:
MAINTENANCE:

– To access the maintenance submenu structure the display should read:

MAINTENANCE:
DIAGNOSTICS:

- Press the [↵] key to display the first submenu MAINTENANCE: DIAGNOSTICS:
- Use the [↑] or [↓] key to select other submenus.

Options:

DIAGNOSTICS
CALIBRATE SENSOR
SENSOR REPLACEMENT
SET ANALOG
SET CLOCK
SENSOR INFO
TRANSMITTER INFO
RELAY TEST

4.1 Diagnostics

The MAINTENANCE: DIAGNOSTICS submenu contains all functions which are important for preventive maintenance (warnings) or to check for fault conditions. This submenu gives access to status information and a number of parameters.

DIAGNOSTICS:
FAULTS

- Press the [↵] key to display the first submenu DIAGNOSTICS:FAULTS:
- Use the [↑] or [↓] key to select one of five functions:

FAULTS
WARNINGS
LAST CALIBRATION
NEXT CALIBRATION
SENSOR TEMPERATURE

4.1.1 Display Faults

If there is a fault message available, the ≫ ϟ ≪ symbol will be displayed in the upper right hand corner of the display.

Use the DIAGNOSTICS: FAULTS function to display any fault in plain text.

- Select DIAGNOSTICS: FAULTS function.
- Press the [↵] key to access the function, display e.g.:
- Press the [↵] key to display the next message. The function automatically terminates if there are no more messages.

  Alternatively, use the [↑] or [↓] key to scroll through the list.

Analog interface failure ! ϟ

For a more detailed description of the warning messages and remedies, see the following table.

Fault	Cause	Remedy
Microprocessor fault ! ϟ	A fault has been detected within the microprocessor system.	Interrupt power for a few seconds. If fault recurs call Dräger Service to check transmitter.
Microproc.EEPROM data not valid ! ϟ	Microprocessor EEPROM contains invalid data.	Call Dräger Service to check transmitter.
Sensor EEPROM data not valid ! ϟ	Sensor EEPROM contains invalid data, or no sensor is connected.	Call Dräger Service to check transmitter.
Supply voltage too low ! ϟ	Power at the transmitter is too low.	Check voltage of power supply and loop resistance.
Pre-amplifier fault ! ϟ	A fault has been detected within preamplifier.	Call Dräger Service to check transmitter.
Sensor failed self-test ! ϟ	Automatic sensor self-test has detected a fault in the sensor.	Replace sensor.
Calibration incorrect ! ϟ	Sensor sensitivity, calculated during the last calibration too low, or incorrect calibration data in the EEPROM.	Repeat calibration. If not successful, replace sensor.
Analog interface fault ! ϟ	Fault detected during internal check of the analog interface.	Call Dräger Service to check transmitter.
Sensor lock activated ! ϟ	The function SENSOR LOCK is activated.	Switch SENSOR LOCK off.

To get a better understanding of the reason for the failure, the Dräger Service department might ask you to produce the detailed Error Code (Section 2.3.2, The Display).

4.1.2 Display Warnings

If there is a warning message available, the ≫i≪ symbol will be displayed in the upper right hand corner of the display.

Use the DIAGNOSTICS: WARNINGS function to display any warning in plain text.

Warning messages offer an opportunity for the operator to perform preventive maintenance.

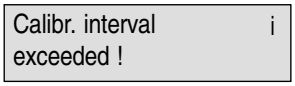

- Select DIAGNOSTICS: WARNINGS function.
- Press the [↵] key to access the function, display e.g.:
- Press the [↵] key to display the next message. The function automatically terminates if there are no more messages.

  Alternatively, use the [↑] or [↓] key to scroll through the list.

For a more detailed description of the warning messages and remedies, see the following table.

Warning	Cause	Remedy
Calibr. interval i exceeded !	Calibration interval of the sensor has expired.	Calibrate sensor.
Calibration i not valid !	Gas concentration has exceeded permissible range. Temperature has been out of permissible range. Gas exposure (time x concentration) has been exceeded.	Calibrate sensor.
End of i sensor life !	Sensor capacity used by 90%. Concentration of calibration gas too low.	Install new sensor. Check concentration of calibration gas; check for adsorption effects in cylinder regulator or tubing.
Major measurement i error !	Temperature outside specified range. Sensor current too high (measuring range exceeded).	Reduce temperature to values within specified range. Reduce gas concentration.
Sensor warming up !	Sensor in warm-up phase.	Wait until sensor has completely warmed up.
Set clock !	Internal real-time clock is not set to a valid time.	Set date and time.
Change lithium i battery !	Built-in lithium battery is flat. If there is a power failure, date and time will be lost.	Call Dräger Service to install new lithium battery

4.1.3 Display Date of Last Calibration

- Select the DIAGNOSTICS: LAST CALIBRATION function.
- Press the [↵] key to access the function. Display: date of last calibration e.g.:

Last calibration
12. Jan. 1998

4.1.4 Display Date for Next Calibration

- Select the DIAGNOSTICS: NEXT CALIBRATION function.
- Press the [↵] key to access the function. Display: date when the next calibration of the sensor should be scheduled, assuming normal operating conditions e.g.:

Next calibration
12. Apr. 1998

Depending on the specific application or requirements for accuracy, the default calibration interval can be reduced or extended. The default value is 180 days. (Section 5.4, Configuring Calibration Parameters).

4.1.5 Display Temperature of Sensor

(This function is of limited value and not supported in the Polytron 2 XP Ex).

- Select the DIAGNOSTICS: SENSOR TEMPERATURE function.
- Press the [↵] key to access the function. Display: actual temperature inside the electronics enclosure in °C (conversion: °F = 1.8 x °C + 32), e.g.:

Sensor temperature
25.6 Deg. C

4.2 Calibration

The MAINTENANCE: CALIBRATE SENSOR submenu contains all the functions necessary to calibrate the sensor.

The sensor must be warmed-up before performing calibration. Do not calibrate the instrument in the presence of an operating radio transmitter.

CALIBRATE SENSOR:
ZERO

- If no hazardous condition exists, the cover may be removed.
- Press the [↵] key to access the CALIBRATE SENSOR submenu, display:
- Use the [↑] or [↓] key to select one of the two functions:
  ZERO
  SPAN

4.2.1 Zero Point Calibration

When this function is activated, the 4 to 20 mA output changes to the maintenance/calibration signal.

- Select the CALIBRATE SENSOR: ZERO function:
- Press the [↵] key to access the function, display:

Apply gas ! ⇕

If the ambient air is free from any interfering gases, the zero calibration may be performed without using Nitrogen,

or

- install the calibration adapter.
- Apply Nitrogen to the calibration adapter (flow approx. 0.5 l/min). Synthetic air may also be used.
- Press the [↵] key, display e.g.:

Value stabilized ? ⇕
1 % LEL Y / N

Wait until the displayed value stabilizes (approximately three minutes) – confirm decision with “yes” (Y); display:

New calibration ⇕
data saved !

Value OK ? ⇕
0 % LEL Y / N

- Press the [↵] key to display the new actual value as a check of the calibration; display e.g.:

Remove gas ! ⇕

- Confirm decision with “yes” (Y); display:
- Remove calibration gas and calibration adapter.

Value ≠ alarm ? ⇕
0 % LEL Y / N

- Press the [↵] key to acknowledge the message, display e.g.:
- Wait until the actual value is below any alarm set point set at the controller. Otherwise, an alarm will be generated immediately after confirming the decision with “yes” (Y);
- Function terminates.

4.2.2 Sensitivity Calibration

When this function is activated, the 4 to 20 mA output changes to the maintenance/calibration signal.

Be careful about correct sequence.
First check zero point and calibrate if necessary. Then check the sensitivity immediately and calibrate, if necessary.

Never calibrate sensitivity before zero point.

In some cases (e.g. combustible vapors) a more accurate calibration can be obtained when the Dräger calibration chamber is used instead of a calibration gas cylinder.

Calibration gas must not be inhaled!
Be careful when using calibration gas. See appropriate Material Safety Data Sheets.

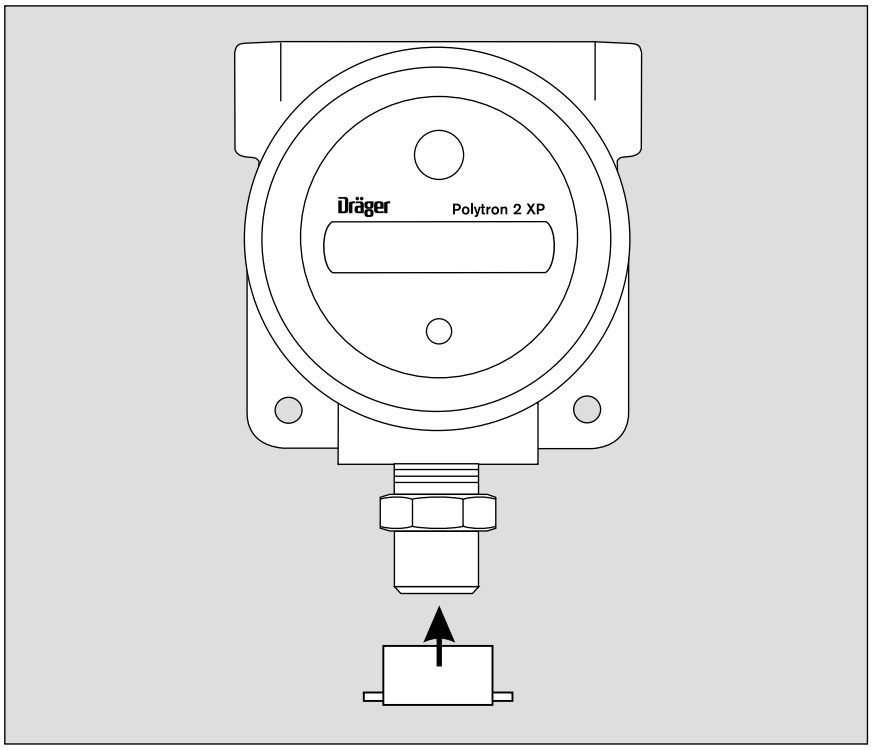

- Select the CALIBRATE SENSOR: SPAN function.
- Press the [↵] key to access the function, display of selected calibration gas. To change the selected calibration gas see Section 5.4.1, Configuring Calibration Gas.

CALIBRATE SENSOR:
SPAN

Calibration gas ⇕
CH4 !

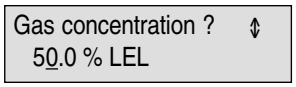

- Press the [↵] key, display e.g.:
- Enter the actual concentration of calibration gas. The concentration used for the last calibration will be shown. The recommended calibration gas concentration for optimum accuracy is 40 to 100% of full scale.

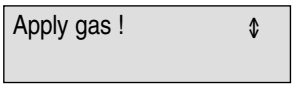

- Press the [↵] key, display e.g.:
- Install the calibration adapter.
- Apply calibration gas to the calibration adapter (flow approx. 0.5 l/min)

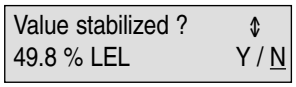

- Press the [↵] key, display e.g.:

Wait until the displayed value stabilizes (approximately three minutes) – confirm decision with “yes” (Y); display:

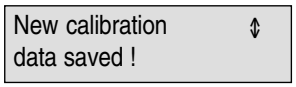

- Press the [↵] key to display the new actual value as a check of the calibration; display e.g.:

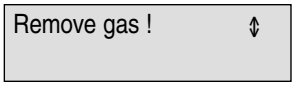

- Confirm decision with “yes” (Y); display:
- Remove calibration gas and calibration adapter.

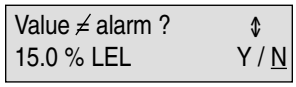

- Press the [↵] key to acknowledge the message, display e.g.:
- Wait until the actual value is below any alarm set point set at the controller. Otherwise, an alarm will be generated immediately after confirming the decision with “yes” (Y).
- Function terminates.

4.3 Sensor Replacement

Sensor replacement should be performed only by trained personnel or Dräger Service. Using this submenu, a sensor may be replaced during operation without causing a fault alarm at the controller. However, a missing sensor *will* generate a fault.

WARNING

To prevent explosions: whenever removing any part of the enclosure with the instrument powered, a portable combustible gas monitor must be used to determine that the area is non-hazardous.

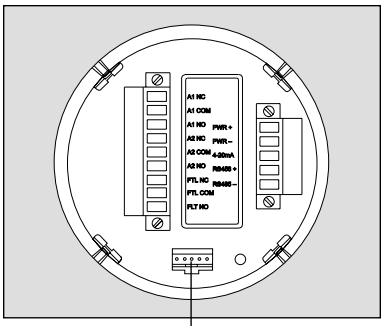

sensor connector (keyed)

- Select the MAINTENANCE: SENSOR REPLACEMENT submenu.
- Press the [↵] key to access the submenu.
- The 4 to 20 mA output changes to the maintenance signal, display:
- Unscrew cover from transmitter.
- Lift the handle and pull the bucket with the electronics out of the enclosure.
- Turn bucket around and pull off sensor connector.
- Unscrew the sensor.
- Take the new sensor out of the packaging. Make sure that the sensor is one designed for use with the Polytron 2 XP Ex transmitter.
- Screw the sensor into the enclosure (at least 5 engaging threads).
- Plug sensor connector back into socket.
- Place bucket back into the enclosure.
- Press the [↵] key to exit the submenu.

MAINTENANCE:
SENSOR REPLACEMENT

Disconnect ⇕
old sensor !

Sensor data ⇕
uploaded !

The signal for maintenance/calibration on the analog output remains until sensor has warmed up.

- The warm-up period will last 1 minute.
- Check calibration (Section 4.2, Calibration).
- Screw cover back on, until it is seated.

4.4 Setting 4 to 20 mA Analog Interface

This submenu allows the user to check the 4 to 20 mA output and its connection to the controller (e.g. to check the tripping of alarms). The analog output of the transmitter can be set to any value within a range of 3 to 22 mA. Furthermore the special configuration signals for faults, warnings and maintenance/calibration can be activated. After exiting the function the analog output will return to its previous setting.

CAUTION

These functions can activate alarms, faults or warnings at the controller. To avoid false alarms, it might be necessary to inhibit the alarms at the controller in advance.

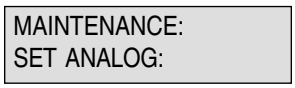

- Select MAINTENANCE: SET ANALOG submenu.
- Press the [↵] key to access the submenu.
- Use the [↑] or [↓] keys to select one of five functions:

  3–22 mA
  GAS CONCENTRATION
  FAULT
  WARNING
  MAINTENANCE

4.4.1 Set Analog Output to a Value Between 3 and 22 mA

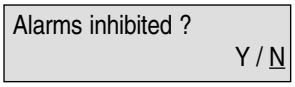

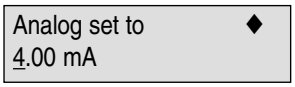

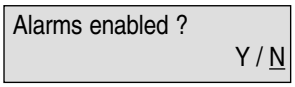

- Select the SET ANALOG: 3–22 mA function.
- Press the [↵] key to access the function, display:
- Confirm decision with “yes” (Y).
- Enter a value, display e.g.:
- Press the [↵] key, the current output will be set to the entered value.
- Enter new value and press the [↵] key

  or

- Press the [ESC] key to leave the function, display:
- Confirm decision with “yes” (Y), to terminate the function.

4.4.2 Set Analog Output to a Value Proportional to a Gas Concentration

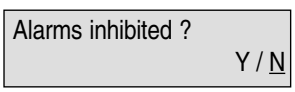

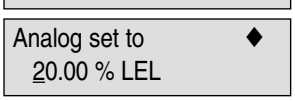

- Select the SET ANALOG: GAS CONCENTRATION function.
- Press the [↵] key to access the function, display:
- Confirm decision with “yes” (Y).
- Enter a value, display e.g.:
- Press the [↵] key, the current output will be set to the respective value.

Example: If the entered value is 20.0 %LEL the current output will be 7.2 mA (assuming that the measuring range is 0 to 100 %LEL and the signal output is 4 to 20 mA.)

- Enter new value and press the [↵] key

  or

- Press the [ESC] key to leave the function, display:
- Confirm decision with “yes” (Y), to terminate the function.

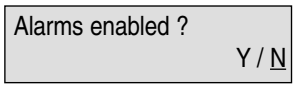

4.4.3 Output of a Fault Signal

- Select the SET ANALOG: FAULT function.
- Press the [↵] key to access the function, display:

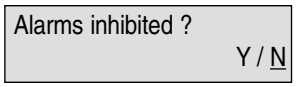

- Confirm decision with “yes” (Y), the current output will be set to the fault signal, display:

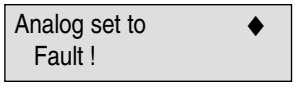

- Press the [↵] or [ESC] key, display:
- Confirm decision with “yes” (Y), to terminate the function.

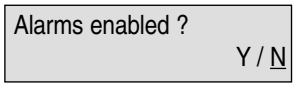

4.4.4 Output of a Warning Signal

- Select the SET ANALOG: WARNINGS function.

- Press the [↵] key to access the function, display:

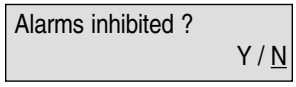

- Confirm decision with “yes” (Y), the current output will be set to the warning signal, display:

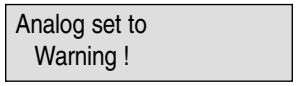

- Press the [↵] or [ESC] key, display:
- Confirm decision with “yes” (Y), to terminate the function.

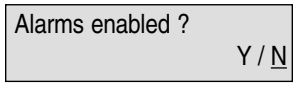

4.4.5 Output of a Maintenance / Calibration Signal

- Select the SET ANALOG: MAINTENANCE function.

- Press the [↵] key to access the function, display:

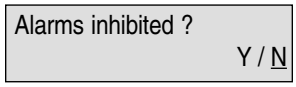

- Confirm decision with “yes” (Y), the current output will be set to the maintenance / calibration signal, display:

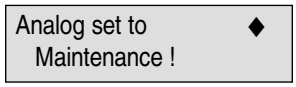

- Press the [↵] or [ESC] key, display:
- Confirm decision with “yes” (Y), to terminate the function.

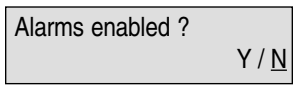

4.5 Set Date and Time

The MAINTENANCE: SET CLOCK submenu contains all the necessary functions to set the real-time clock of the transmitter. The real-time clock allows the user to save the correct date of the calibration in the sensor EEPROM.

By default, the clock is set to Central European Time (CET).

A built-in battery ensures that the clock continues to run, even if the transmitter loses power. The typical life of the battery when there is no electrical power supplied to the transmitter is 3 years.

```
MAINTENANCE:
SET CLOCK:
```

- Select MAINTENANCE: SET CLOCK submenu.
- Press the [↵] key to access the SET CLOCK submenu, display:

```
SET CLOCK:
DATE
```

- Use [↑] or [↓] key to select one of the two functions:
  DATE
  TIME

4.5.1 Changing the Date

- Select the SET CLOCK: DATE function.
- Press the [↵] key to access the function, display e.g.:

```
Date ?
4. Feb. 1998
```

- The actual date on the real-time clock is displayed in DD.MMM.YYYY (day, month, year) format.
- Change date, if necessary.
- Press the [↵] key to accept changed date and to terminate the function.

  or

- Press the [ESC] key to terminate the function without changing the date.

4.5.2 Changing the Time

```
SET CLOCK:
TIME
```

- Select the SET CLOCK: TIME function.
- Press the [↵] key to access the function, display e.g.:

```
Time (HH: MM) ?
14 : 07
```

- The actual time of the real-time clock is displayed in the HH:MM (hours, minutes) format – in 24-hour format.
- Change the time, if necessary.
- Press the [↵] key to accept changed time and to terminate the function.

  or

- Press the [ESC] key to terminate the function without changing the time.

4.6 Display Sensor-Specific Information

The MAINTENANCE: SENSOR INFO submenu contains all functions which are related to information about the sensor.

- Select the MAINTENANCE: SENSOR INFO submenu.
- Press the [↵] key to access the submenu, display:
- Use the [↑] or [↓] key to select one of the six functions:

  PART-No.
  Part number of the sensor is displayed.
  (Not supported in this version of Polytron 2 XP Ex. Refer to engraving at the sensor.)

  SERIAL-No.
  Serial number of the sensor is displayed.
  (Not supported in this version of Polytron 2 XP Ex. Refer to engraving at the sensor.)

  EEPROM TYPE
  EEPROM type of the sensor is displayed.

  EEPROM VERSION
  Number of the EEPROM version of the sensor data memory is displayed.

  MANUFACTURING DATE
  The manufacturing date of the sensor is displayed.
  (Not supported in this version of Polytron 2 XP Ex. The display shows 0.0.2100.)

  MAX PERMISS GASCONC
  The maximum permissible gas concentration for sensor is displayed.
- Press the [↵] key to access a function.
- Press the [↵] key or [ESC] to terminate a function.

MAINTENANCE:
SENSOR INFO:

SENSOR INFO:
PART-No.

4.7 Display Transmitter-Specific Information

The MAINTENANCE: TRANSMITTER INFO submenu contains all functions which are related to information about the transmitter.

- Select the MAINTENANCE: TRANSMITTER INFO submenu.
- Press the [↵] key to access the submenu, display:
- Use the [↑] or [↓] key to select one of four functions:

  HARDWARE PART-No.
  Part number of the main electronics is displayed.

  HARDWARE SERIAL-No.
  Serial number main electronics is displayed.

  SOFTWARE PART-No.
  Software part number is displayed.

  SOFTWARE VERSION
  Version number of software is displayed.
- Press the [↵] key to access a function.
- Press the [↵] or [ESC] key to terminate a function.

MAINTENANCE:
TRANSMITTER INFO:

TRANSMITTER INFO:
HARDWARE PART-No.

4.8 Relay Test

(Only for users who have purchased the on board relay option).

With this function the status of the relays can be changed for test purposes (e.g. to check the function of alarm devices connected to the relays). After exiting this function, the status of the relays, if changed, will automatically return to their original status. When this function is activated, the maintenance signal is transmitted to the controller.

CAUTION

When the relays are activated, alarm devices will be switched on.

MAINTENANCE:
RELAY TEST:

- Select MAINTENANCE: RELAY TEST submenu.
- Press the [↵] key to access the function, display e.g.:

A1	A2	ERR ⇕
OFF	OFF	OFF

The cursor is under the relay status, which can now be changed.

- Use the [↑] or [↓] keys to change the status of a relay:
- Use the [←] or [→] keys to change the position of the cursor:
- Press the [ESC] key to terminate the function.

5 Configuration Menu

The configuration menu contains all functions which are necessary to configure the transmitter to application specific requirements. There are various submenus within the configuration menu. Most of the submenus also contain a number of functions (Section 3.1, Menu Structure).

See Section 3.1.2, Configuration Menu to access the configuration submenu structure.
The display should read:

MENU:
CONFIGURATION:

- Press the [↵] key to display the first submenu CONFIGURATION: LANGUAGE:

CONFIGURATION:
LANGUAGE

- Use the [↑] or [↓] key to select other submenus.

  Options:
  - LANGUAGE
  - INITIALIZATION
  - GAS + RANGE
  - CALIBRATION PARAM
  - SENSOR LOCK ON/OFF *(This function is not supported in the Polytron 2 XP Ex.)*
  - DISPLAY ON/OFF
  - SPECIAL SIGNALS
  - PASSWORDS
  - COMMUNICATION
  - ALARMS

5.1 Setting Language

This submenu is used to change the language of the display. The default setting is “English”.

CONFIGURATION:
LANGUAGE

- Press the [↵] key to access the CONFIGURATION: LANGUAGE function, display:

LANGUAGE ?
English

- Use [↑] or [↓] key to select one of the following languages: English, Spanish, French or German.
- Press the [↵] key to accept the selected language and to exit from function.

5.2 Initialization of Factory-Set Values

This submenu resets all the parameters of the transmitter to the factory default settings. When this function is activated, the 4 to 20 mA output changes to the maintenance/calibration signal (Section 7, Default Values).

CONFIGURATION:
INITIALIZATION:

- Select CONFIGURATION: INITIALIZATION: submenu.
- Press the [↵] key, display:

INITIALIZATION:
FACTORY DEFAULTS

- Select INITIALIZATION: FACTORY SETTINGS function.
- Press the [↵] key, display:

Perform Initiali- ⇕
zation ? Y / N

- Confirm decision with “yes”, factory settings are reestablished, display:

Initialization ⇕
completed !

- Press the [↵] key to end function.

5.3 Configuring Gas Type, Units and Measuring Range

This submenu allows the user to change the default configuration for type of gas, engineering units and measuring range. When this function is activated, the 4 to 20 mA output changes to the maintenance/calibration signal.

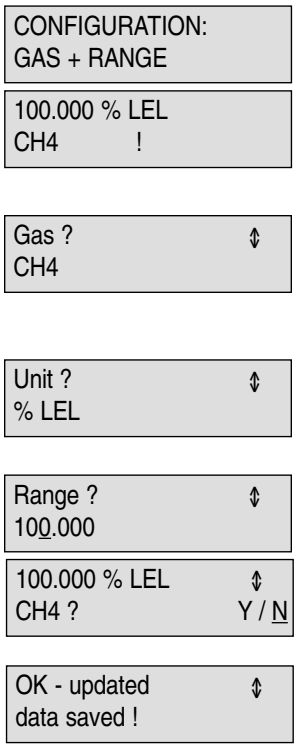

- Select CONFIGURATION: GAS + RANGE function.
- Press the [↵] key to display the current configuration, e.g.:

  If the configuration does not need to be changed:
- Exit submenu by pressing the [ESC] key.

  Otherwise,
- Press the [↵] key to display current configuration for type of gas, e.g.:

- Use the [↑] or [↓] key to select a different type of gas.
- Press the [↵] key to accept the selected type of gas and to display the current engineering units, e.g.:
- Use the [↑] or [↓] key to select different engineering units (e.g. Vol%).
- Press the [↵] key to accept the selected engineering units and to display the current measuring range e.g.:
- Change measuring range if necessary.
- Press the [↵] key to accept new measuring range, display:

- Confirm the decision with “yes”.

The new configuration is saved, display:

- Press the [↵] key to exit from submenu.

If there is no valid calibration data for the selected type of gas, a warning or fault message is generated. Zero-point and sensitivity must be calibrated before using the instrument (Section 4.2, Calibration).

5.4 Configuring Calibration Parameters

This submenu allows the user to configure the settings for the calibration gas parameters. When this function is activated,
the 4 to 20 mA output changes to the maintenance/calibration signal.

- Select CONFIGURATION: CALIBRATION PARAM submenu.
- Press the [↵] key to access the submenu display e.g.:
- Use the [↑] or [↓] keys to select one of two functions:
  CALIBRATION GAS
  CALIBR. INTERVAL

CONFIGURATION:
CALIBRATION PARAM:

CALIBRATION PARAM:
CALIBRATION GAS

5.4.1 Configuring Calibration Gas

When a different calibration gas is required, the type of gas can be selected. Also, the engineering units for the concentration of calibration gas can be changed.

- Select the CALIBRATION PARAM: CALIBRATION GAS function.
- Press the [↵] key to display the current configuration, e.g.:

  If the configuration does not need to be changed:
- Exit submenu by pressing the [ESC] key.

  Otherwise,
- Press the [↵] key to display the current calibration gas configuration e.g.:
- Use the [↑] or [↓] key to select a different type of calibration gas
- Press the [↵] key accept the selected type of calibration gas and to display the current engineering units, e.g.:
- Use [↑] or [↓] key to select different engineering units (e.g. Vol%).
- Press the [↵] key to accept the selected engineering units, display:
- Confirm the decision with “yes”.

The new configuration is saved, display:

- Press the [↵] key to exit from submenu.

% LEL ⇕
CH4 !

Calibration gas ? ⇕
CH4

Cal. gas unit ? ⇕
% LEL

% LEL ⇕
CH4 ? Y / N

OK - updated ⇕
data saved !

5.4.2 Configuring Calibration Interval

This submenu allows the user to change the calibration interval of the sensor. When the calibration interval is expired, the transmitter will issue a warning message.

- Select the CALIBRATION PARAM: CALIBR.INTERVAL function.
- Press the [↵] key to access the function and to display the current calibration interval, e.g.:
- Use the [↑]or [↓] key to change the calibration interval.
- Press the [↵] key to accept the new calibration interval, display:
- Press the [↵] key to end function.

CALIBRATION PARAM:
CALIBR. INTERVAL

Calibr. Interval ?
90 days

OK - updated
data saved !

5.5 Sensor Lock

(This function is not supported in the Polytron 2 XP Ex.)

CONFIGURATION:
SENSOR LOCK ON/OFF

5.6 Switching Measured Value Display On/Off

This functions allows the user to switch the display of the actual gas concentration, in measurement mode, on or off. When the display of the actual gas concentration is switched off, the display will only read the engineering units and the type of gas. Only the display of the actual gas concentration is suppressed. The default setting on delivery is 'ON'.

CONFIGURATION:
DISPLAY ON/OFF

- Select the CONFIGURATION: DISPLAY ON/OFF function.
- Press the [↵] key to access the function and to display the current configuration, e.g.:

Display ?
ON

- Use the [↑] or [↓] key to select "ON" or "OFF".
- Press the [↵] key to accept the selection and to exit the function.

5.7 Switching Special Signal On/Off

This function allows the user to switch the feature of a warning signal on the analog output interface on or off. The default setting is 'OFF'.

When enabled: If a warning occurs, the signal gets interrupted for one second every 10 seconds with the "fault" signal.

CONFIGURATION:
SPECIAL SIGNALS:

- Select the CONFIGURATION: SPECIAL SIGNALS function.

SPECIAL SIGNALS
WARNING ON/OFF

- Press the [↵] key to access the function and to display current configuration, e.g.:

Warnings ?
OFF

- Press the [↵] key.
- Use the [↑] or [↓] key to select 'ON' or 'OFF'.
- Press the [↵] key to accept selected configuration and to exit the function.

5.8 Configuring Special Signals

This function allows the user to switch the feature of a warning signal on the analog output interface on or off. The default setting is 'OFF'. The Configuration: Special signals: submenu contains all the functions needed to poll or set the main parameter of the signals at the analog interface.

When enabled: If a warning occurs, the signal gets interrupted for one second every 10 seconds with the "fault" signal.

- Select the CONFIGURATION: SPECIAL SIGNALS function.
- Press the [↵] key to access the function and to display current configuration, e.g.:
- Press the [↵] key.
- Use the [↑] or [↓] key to select one of eight functions:

  Warning On/Off
  Warning Level
  Warning Repeats
  Warning LoStrobe
  Maintenance Low Level
  Maintenance High Level
  Maintenance Repeats
  Maintenance LoStrobe
- Press the [↵] key to accept the selection and to exit the function.

CONFIGURATION:
SPECIAL SIGNALS:

SPECIAL SIGNALS
WARNING ON/OFF

Warnings ?
OFF

5.8.1 Switching the Warning Signal On/Off

Output of the warning signal to the analog interface can be switched on and off via this function. It is set to 'OFF' on delivery. The warning signal must be switched on if a warning is to be output to the analog interface. The current at the analog interfaces switches to 'Fault' for 0.5 seconds every 10 seconds when a warning is present. The measuring signal is output during the remaining time.

- Select the function SPECIAL SIGNALS: Warning On/Off
- Press the 'EXE' the function is invoked and the currently set configuration is displayed, e.g.:
- Use the [-] or [¯] key to select one ON or OFF.
- Press EXE, the selected configuration is adopted and the function is ended.

5.8.2 Warning Level

This function allows you to set the mA output level that is transmitted when a warning occurs. The default value is 3.0 mA. The acceptable range of values is:

- Press the [↵] key to access the function and to display the current configuration.
- Use the [↑] and [↓] keys to change the value of the underlined digit on the display, and the [←] and [→] keys to move to another digit.
- Press the [↵] key when the desired Warning Level has been set to accept this value and to exit the function.

SPECIAL SIGNALS
WARNING LEVEL

WARNING LEVEL
3.0 mA

5.8.3 Warning Repeats

This function allows you to choose the time interval between transmissions of the Warning Signal. The default value is 10.0 seconds.

SPECIAL SIGNALS
WARNING REPEATS

WARNING REPEATS
10.0 SEC

- Press the [↵] key to access the function and to display the current configuration.
- Use the [↑] and [↓] keys to change the value of the underlined digit on the display, and the [←] and [→] keys to move to another digit.
- Press the [↵] key when the desired Warning Repeat time has been set to accept this value and to exit the function.

5.8.4 Warning LoStrobe

This function allows you to choose the length of time that the warning signal stays on during each Warning Repeat interval. The default value is 0.5 seconds. When the Warning Signal is not being sent, the normal 4 to 20mA signal is transmitted.

SPECIAL SIGNALS
WARNING LOSTROBE

WARNING LOSTROBE
0.5 SEC

- Press the [↵] key to access the function and to display the current configuration.
- Use the [↑] and [↓] keys to change the value of the underlined digit on the display, and the [←] and [→] keys to move to another digit.
- Press the [↵] key when the desired Warning LoStrobe time has been set to accept this value and to exit the function.

5.8.5 Maintenance Low Level

In Maintenance Mode, you can choose to have the Polytron 2 XP Tox transmit an oscillating or a steady signal to a controller. This signal tells an operator in the control room that maintenance is being performed on the device. The default value is an oscillating 3 to 5 mA signal at 1 second intervals. Setting both Low and High Maintenance Signal Levels to the same mA value causes a steady, non-oscillating signal to be sent.

SPECIAL SIGNALS
MAINT. LOW LEVEL

MAINT. LOW LEVEL
3.0 mA

The Maintenance Low Level function allows you to set the lower mA output level, for example, the 3 mA level in the default 3 to 5 mA oscillating signal. The default value is 3.0 mA.

- Press the [↵] key to access the function and to display the current configuration.
- Use the [↑] and [↓] keys to change the value of the underlined digit on the display, and the [←] and [→] keys to move to another digit.
- Press the [↵] key when the desired Maint. Low Level has been set to accept this value and to exit the function.

5.8.6 Maintenance High Level

The Maintenance High Level function allows you to set the upper mA output level, for example, the 5 mA level in the default 3 to 5 mA oscillating signal. The default value is 5.0 mA.

SPECIAL SIGNALS
MAINT. HIGH LEVEL

MAINT. HIGH LEVEL
5.0 mA

- Press the [↵] key to access the function and to display the current configuration.
- Use the [↑] and [↓] keys to change the value of the underlined digit on the display, and the [←] and [→] keys to move to another digit.
- Press the [↵] key when the desired Maint. High Level has been set to accept this value and to exit the function.

5.8.7 Maintenance Level Repeats

This function allows you to choose the time interval between transmissions of the Maintenance Signal. The default value is 1.0 second.

SPECIAL SIGNALS
MAINT. REPEATS

MAINT. REPEATS
1.0 SEC

- Press the [↵] key to access the function and to display the current configuration.
- Use the [↑] and [↓] keys to change the value of the underlined digit on the display, and the [←] and [→] keys to move to another digit.
- Press the [↵] key when the desired Maint. Repeat time has been set to accept this value and to exit the function.

5.8.8 Maintenance LoStrobe

This function allows you to choose the time interval during the Maintenance Repeat period when the low level signal (3mA in our example) is transmitted. For instance, if the Maintenance Repeat period is 1.0 second and Maintenance LoStrobe is set to 0.7 seconds, the 3mA signal will stay on for 0.7 seconds, followed by the 5mA signal for 0.3 seconds. The default value is 0.7 seconds.

SPECIAL SIGNALS
MAINT. LOSTROBE

MAINT. LOSTROBE
0.7 SEC

- Press the [↵] key to access the function and to display the current configuration.
- Use the [↑] and [↓] keys to change the value of the underlined digit on the display, and the [←] and [→] keys to move to another digit.
- Press the [↵] key when the desired Maint. LoStrobe time has been set to accept this value and to exit the function.

5.9 Changing the Password

This submenu allows the user to change the passwords for the maintenance and configuration menu.

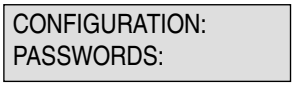

- Select the CONFIGURATION: PASSWORDS submenu.
- Press the [↵] key to access the submenu.
- Use the [↑] or [↓] key to select one of the two functions:
  MAINTENANCE or CONFIGURATION.

5.9.1 Changing the Maintenance Password

- Select the PASSWORDS: MAINTENANCE function.

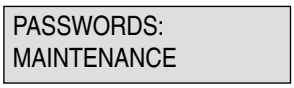

- Press the [↵] key to access the function and to display the current password, e.g.:

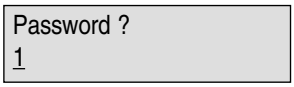

- Enter the new password, up to 6 digits, e.g. DAVID.

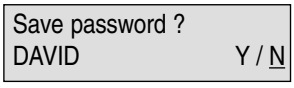

- Press the [↵] key, display:
- Confirm the decision with 'Y' (yes).
- Press the [↵] key to accept the new password and to terminate the function.

If six blank spaces are selected for the new password, the maintenance menu can be accessed from measurement mode by pressing the [↵] key twice.

5.9.2 Changing the Configuration Password

- Select the PASSWORDS: CONFIGURATION function.

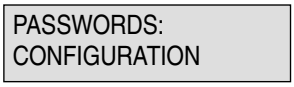

- Press the [↵] key to access the function and to display the current password, e.g.:

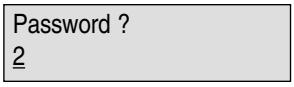

- Enter the new password, up to 6 digits, e.g. PAUL.

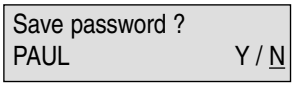

- Press the [↵] key, display:
- Confirm the decision with 'Y' (yes)
- Press the [↵] key to accept the new password and to terminate the function.

If six blank spaces are selected for the new password, the configuration menu can be accessed from measurement mode by pressing the [↵] key twice.

5.10 Communication

The submenu CONFIGURATION: COMMUNICATION contains all functions which allow the user to read or modify the most important parameters of the HART interface.

- Select CONFIGURATION: COMMUNICATION submenu.
- Press the [↵] key to access the submenu.
- Use the [↑] or [↓] keys to select one of the three functions:

POLLING ADDRESS
UNIQUE IDENTIFIER
TAG

5.10.1 Configuring Polling Address

The polling address configures the transmitter either for the analog mode (4 to 20mA) or the multidrop mode. Setting the polling address to “0” enables the analog mode (4 to 20mA).
To operate in multidrop mode, the polling address must be set to a value in the range from “1” to “15”. This disables the analog interface and freezes it to a constant current of approximately 3mA.

In order to enable a HART controller to interrogate the unique identifier (unambiguous HART address; use HART command #0), all transmitters on one cable trunk need to be configured with a different polling address.

We recommend choosing a sequential series of numbers, starting with “1”. This configuration corresponds to the HART command #6 (“Write Polling Address”).

COMMUNICATION:
POLLING ADDRESS

- Select the COMMUNICATION: POLLING ADDRESS function.

Polling Address ?
0

- Press the [↵] key to access the function, display of the current polling address, e.g.:
- Use the [↑], [↓], [←] or [→] keys to enter a polling address.
- Press the [↵] key to accept the selected polling address and to terminate the function.

Executing the INITIALIZATION: FACTORY SETTINGS function does not affect the setting of the polling address.

5.10.2 Read Unique Identifier

This function allows the user to read the unique identifier (unambiguous HART address), which is mandatory for proper addressing in almost all HART commands. Nevertheless, the unique identifier is only required if the HART controller is unable to read the unique identifier using HART command #0 in short frame format or HART command #11. The displayed address corresponds to the address returned by HART command #0 (“Read Unique Identifier”) or #11 (“Read Unique Identifier associated with Tag”).

COMMUNICATION:
UNIQUE IDENTIFIER

- Select the COMMUNICATION: UNIQUE IDENTIFIER function.

UNIQUE IDENTIFIER
52 F7 E4 E1 EF

- Press the [↵] key to access the function and to display the unique identifier of the transmitter, e.g.:
- Press the [↵] or [ESC] key to terminate the function.

5.10.3 Configuring Tag

The COMMUNICATION: TAG function allows the user to mark a specific transmitter with a tag which may consist of up to 8 alphanumeric characters. It can also be used as an address, in order to read the unique identifier using HART command #11 (“Read Unique Identifier associated with Tag”), from the transmitter, even if the polling address is unknown. This assumes, that an unambiguous tag has been configured before.

COMMUNICATION:
TAG

- Select the COMMUNICATION: TAG function.
- Press the [↵] key to display the current tag, e.g.:

TAG:
STORAGE

- Use the [↑], [↓], [←] or [→] keys to enter new tag, maximum length: 8 characters.
- Press the [↵] key to accept the selected tag and to terminate the function.

Executing the INITIALIZATION: FACTORY DEFAULTS function does not affect the tag setting.

5.11 Programming the Relays

(Only for users who have purchased the on board relay option).

The CONFIGURATION: ALARMS submenu contains all necessary functions to program the relays of the transmitter. When accessing one of these functions, the transmitter will emit the maintenance signal.

- Select CONFIGURATION: ALARMS submenu.
- Press the [↵] key to access the submenu, display:
- Use the [↑] or [↓] keys to select one of three functions:

CONFIGURATION:
ALARMS:

ALARM 1
ALARM 2
ACKN. BY ENTER KEY

5.11.1 Set the Alarm Settings for Alarm 1

- Select the ALARMS: ALARM 1 function.
- Press the [↵] key to access the function, display:

Alarm Set Point

ALARMS:
ALARM 1

- Enter the alarm threshold where the relay should trip. The previous setting will be shown.
- Press the [↵] key to accept the value.

A1 setpoint ? ⇕
20.000 % LEL

Alarm Direction

This function should be used **ONLY** for the Polytron 2 XP Tox with Oxygen sensor.

- Use the [↑] or [↓] keys to change from ‘rising’ to ‘falling’:
- Press the [↵] key, to accept the change.

A1 direction ? ⇕
rising

Hysteresis

This function allows the user to set a bandwidth in which a tripped relay stays in its status until the gas concentration is outside that bandwidth. With this function relays will not “chatter” at the alarm set point. E.g., A1 set point is 20% LEL, hysteresis is set to 3% LEL Alarm 1 will come on at 20% LEL and will stay on until the concentration falls below 17% LEL.

- Enter the hysteresis bandwidth which should be used. The previous setting will be shown.
- Press the [↵] key, to accept the value.

A1 hysteresis ? ⇕
0 %LEL

Alarm Latch Mode

- Use the [↑] or [↓] keys to change from 'latching' to 'non latching':
- Press the [↵] key, to accept the change.

A1 latchmode ? ⇕
non latching

Alarm Acknowledge Mode

- Use the [↑] or [↓] keys to change from 'acknowledgeable' to 'non-acknowledgeable':
- Press the [↵] key, to accept the change.

A1 ack. mode? ⇕
acknowledgeable

ALARMS:
ALARM 1

5.11.2 Set the Alarm Settings for Alarm 2

- Select the ALARMS: ALARM 2 function.
- Press the [↵] key to access the function, display:

ALARMS:
ALARM 2

Alarm Set Point

- Enter the alarm threshold where the relay should trip. The previous setting will be shown.
- Press the [↵] key to accept the value.

A2 setpoint? ⇕
40.000 % LEL

Alarm Direction

This function should be used **ONLY** for the Polytron 2 XP Tox with Oxygen sensor.

- Use the [↑] or [↓] keys to change from 'rising' to 'falling':
- Press the [↵] key, to accept the change.

A2 direction ? ⇕
rising

Hysteresis

This function allows the user to set a bandwidth in which a tripped relay stays in its status until the gas concentration is outside that bandwidth. With this function relays will not "chatter" at the alarm set point. E.g., A2 set point is 40% LEL, hysteresis is set to 3% LEL Alarm 2 will come on at 40% LEL and will stay on until the concentration falls below 37% LEL.

- Enter the hysteresis bandwidth which should be used. The previous setting will be shown.
- Press the [↵] key, to accept the value.

A2 hysteresis ? ⇕
0 %LEL

Alarm Latch Mode

- Use the [↑] or [↓] keys to change from 'latching to 'non latching':
- Press the [↵] key, to accept the change.

A2 latchmode ? ⇕
latching

Alarm Acknowledge Mode

- Use the [↑] or [↓] keys to change from 'acknowledgeable' to 'non- acknowledgeable':
- Press the [↵] key, to accept the change.

A2 ack. mode? ⇕
acknowledgeable

ALARMS:
ALARM 2

5.11.3 Set Mode of Acknowledging Alarms

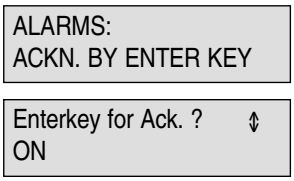

This function allows the user to program the transmitter, so latching alarms can be acknowledged by pressing the [↵] key.

- Select the ALARMS: ACKN. BY ENTERKEY function.
- Press the [↵] key to access the function, display:
- Use the [↑] or [↓] keys to change from 'ON' to 'OFF':
- Press the [↵] key, to accept the change.

or

- Press the [ESC] key to terminate the function without changes.

6 Technical Information

6.1 Approvals

UL, CSA	Class I, Div 1, Groups B, C, D
CENELEC	EEx d IIC T6
CE marking	Electromagnetic Compatibility (Directive 89/336 EN50270/EEC) Conforms to EN 50270

6.2 Signal Transmission to Central Control Unit

Analog	Transmission by 3-core shielded cable
– Measurement current	4 mA to 20 mA
– Sensor drift below zero	3.8 mA to 4 mA
– Measuring range exceeded	20 mA to 20.5 mA
– Transmitter fault	< 3.2 mA
– Maintenance signal	4 mA ± 1 mA, 1 Hz modulation
Option Which Can Be Switched On or Off	
– Warning	Fault signal every 10 seconds for 1 second
Digital	
– HART-compatible	Transmission by 3-core shielded cable
– RS 485	Transmission by twisted-pair shielded cable

6.3 Voltage of Power Supply

Operating Voltage	10 to 32 V DC
In-rush current	900 mA for 0.5 msec
	500 mA for 1.5 msec
Power Input	180 mA @ 24 V DC
Unit has polarity reversal protection.	
Connector accepts 16 to 22 gauge wire AWG (0.5 to 1.5 mm^2).	

6.4 Physical Specifications

Enclosure	NEMA 4 + 7 (IP 65)
Size	7”L x 5.25”W x 5.25”D; (180 x 135 x 135mm)
Weight	5 lb; (2.3 kg)

6.5 Environmental Parameters

Temperature	–40 to 167 °F
	CENELEC: T4 –40 to 80 °C
	T6 –40 to 40 °C
Pressure	20.7 to 38.4 in. of Hg (700 to 1300 mbar)
Humidity	0 to 100% r.h., transmitter
Maximum Air Velocity	≤ 19.5 ft/s (≤ 6 m/s)

6.6 Relay Specification *(optional)*

Relays	Energized for Fail Safe Operation
Relay Contacts	3 SPDT (Single Pole Double Throw) for A1, A2 and Fault
Contact Rating	5A @ 30 V DC
	5A @ 250 V A

6.7 Ambient Influences

Methane/Air Mixtures	
Repeatability	
Zero	≤ ± 1 %LEL
Sensitivity	≤ ± 2.5% of measured value
Error of Linearity	
0 to 40 %LEL	≤ ± 4 %LEL
40 to 100 %LEL	≤ ± 10 % of measured value
Effect of Temperature, –4 to 104 °F (–20 to 40 °C)	
Zero	≤ ± 0.1 %LEL/K
Sensitivity	≤ ± 0.5 % of measured value/K
Effect of Pressure, 20.7 to 38.4 in. of Hg (700 to 1300 hPa)	
Zero	≤ ± 0.05 %LEL/hPa
Sensitivity	≤ ± 0.1 % of measured value/hPa
Effect of Humidity, 10 to 95% r.h. at 104 °F (40 °C)	
Zero	≤ ± 0.1 %LEL/%r.h.
Sensitivity	≤ ± 0.25 % of measured value/r.h.
Effect of Air Flow, 0 to 19.6 ft/s (0 to 6 m/s)	
Zero	≤ ± 4 %LEL
Sensitivity	≤ ± 5 % of measured value
Long Term Drift, (without poisoning)	
Zero	≤ ± 0.2 %LEL/month
Sensitivity	≤ ± 2 % of measured value/month
Response Time	
$t_{0...90}$ at 77 °F (25 °C)	< 25s

7 Default Values

Measured value display on/off:	on
Warning signal on/off:	off
Gas name:	CH4
Engineering units:	%LEL
Measuring range for 4 to 20 mA interface:	0 to 100 %LEL
Calibration interval:	180 days
A1 alarm level	20 %LEL
A2 alarm level	40 %LEL
A1, A2 alarm direction	rising
A1 acknowledgeable	
A2 non-acknowledgeable	
A1 non-latching	
A2 latching	
Calibration gas	CH_4 50 % LEL
Maintenance password	1
Configuration password	2

8 Sensor Principle

8.1 Operating Principle

The DraegerSensor is a transducer for measuring the partial pressure of combustible gases and vapors contained in ambient air. It uses the heat-of-combustion principle.

The monitored air diffuses through the sintered metal disc into the sensor. There the mixture of combustible gases and vapors are catalytically combusted at a heated detector element (pellistor). The monitored air supplies the Oxygen required for the combustion. Due to the resulting heat-of-combustion, the detector element gets hotter. This increase in heat causes a change of resistance in the detector element, which is proportional to the concentration of the mixture of combustible gases and vapors in the monitored air.

In addition to the catalytically active detector element, there is an inactive compensator element. Both elements are parts of a Wheatstone bridge. Thus environmental effects like changes in temperature or humidity are almost entirely compensated.

8.2 Contaminating Gases

Vaporous silicon- and lead-compounds, sulfurous compounds such as hydrogen sulfide and sulfur dioxide, phosphorous compounds such as phosphine. Acidic vapors such as hydrogen fluoride, hydrogen chloride, hydrogen bromide and halogenated organic compounds such as refrigerants and tri- or tetrachloroethene.

A calibration check might be necessary, if the sensor was exposed to a high concentration of combustible gases or vapors for an extended period of time or to contaminants as listed above.

If the sensor has reached the end of its life span, meaning that the amplification for the sensor signal is out of the permissible range, the message ‘End of Life’ will be displayed when the sensitivity calibration is performed.

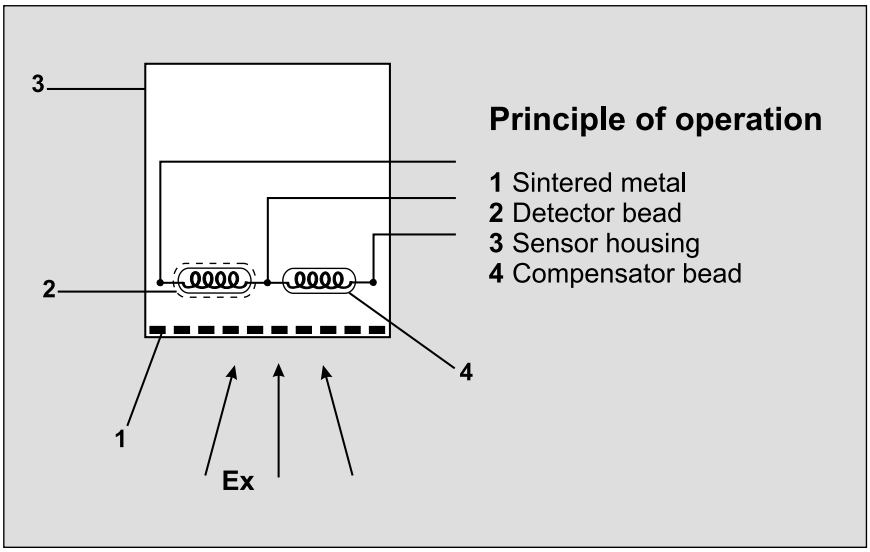

9 Order Information

Order #	Description
4543005	Polytron 2 XP Ex with sensor, without relays; UL version
4543000	Polytron 2 XP Ex with sensor and relays: UL version
4543060	Polytron 2 XP Ex with sensor, without relays; CENELEC/CSA version
4543059	Polytron 2 XP Ex with sensor and relays; CENELEC/CSA version

9.1 Calibration Supplies

For USA

Order #	Description
Calibration System #1 - for calibration with disposable gas cylinder.	
4594620	Calibration Kit *(includes case, calibration adapter 4509314, 500 cc/min cylinder regulator and 100% N_2 103 L @ 1000 psi Nitrogen (zero gas) cylinder)*
4557019	Calibration Gas, Combustible, 2.5 Vol% (50% LEL) Methane
4510057	Calibration Gas, Combustible, 0.75 Vol% (50% LEL) Pentane
4594627	Calibration Gas, Combustible, 2 Vol% (50% LEL) Hydrogen
4594624	Calibration Gas, Combustible, 0.75 Vol% (34.1% LEL) Propane
4594838	Calibration Gas, Nitrogen 100% (Zero gas)
6802206	Calibration Chamber for Solvents

For all other countries

Order #	Description
Calibration System #2 - for calibration with gas cylinder	
6806978	Calibration Adapter
6802206	Calibration Chamber for Solvents

Consult your domestic Dräger subsidiary, agent, or distributor for availability.

9.2 Replacement Parts

Order #	Description
6809755	Combustible Sensor, Poison Resistant (PR), UL Version
6809790	Combustible Sensor, Poison Resistant (PR), CENELEC/CSA Version
4543210	Polytron 2 XP Ex Bucket Assembly
4543211	Polytron 2 XP Ex Bucket Assembly with relays
4509314	Calibration Adapter

9.3 Accessories

For USA

Order #	Description
4543052	Remote Control, UL, C/UL Version
4543053	Remote Control, CENELEC Version
4509315	Splash Guard

For all other countries

Order #	Description
4543052	Remote Control, UL, C/UL Version
4543053	Remote Control, CENELEC Version
6807549	Splash Guard

Northbrook, Illinois • (847) 272-8800
Melville, New York • (516) 271-6200
Santa Clara, California • (408) 985-2400
Research Triangle Park, North Carolina • (919) 549-1400
Camas, Washington • (360) 817-5500

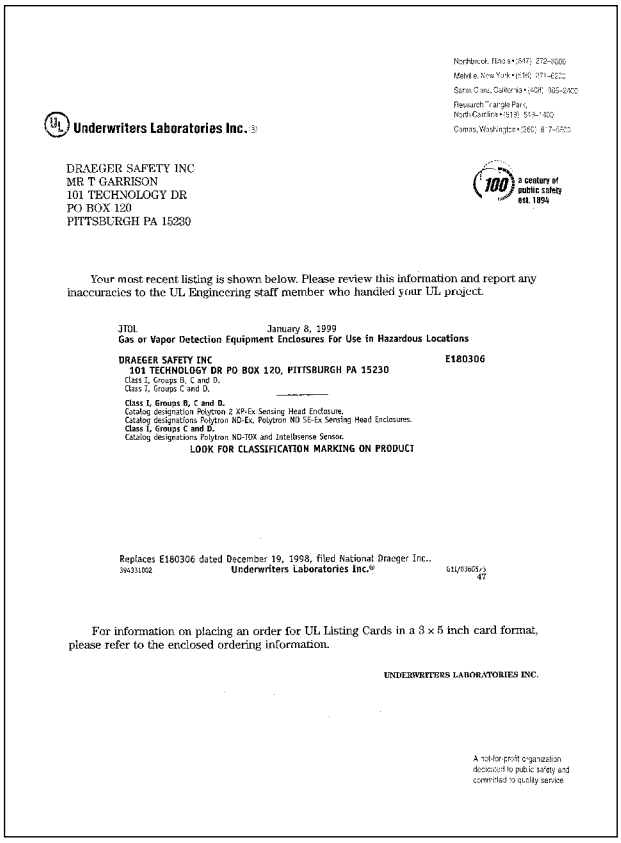

Underwriters Laboratories Inc.®

DRAEGER SAFETY INC
MR T GARRISON
101 TECHNOLOGY DR
PO BOX 120
PITTSBURGH PA 15230

100 a century of public safety est. 1894

Your most recent listing is shown below. Please review this information and report any inaccuracies to the UL Engineering staff member who handled your UL project.

JTOL January 8, 1999
Gas or Vapor Detection Equipment Enclosures For Use in Hazardous Locations

DRAEGER SAFETY INC **E180306**
101 TECHNOLOGY DR PO BOX 120, PITTSBURGH PA 15230
Class I, Groups B, C and D.
Class I, Groups C and D.

Class I, Groups B, C and D.
Catalog designation Polytron 2 XP-Ex Sensing Head Enclosure.
Catalog designations Polytron ND-Ex, Polytron ND SE-Ex Sensing Head Enclosures.
Class I, Groups C and D.
Catalog designations Polytron ND-TOX and Intellisense Sensor.
LOOK FOR CLASSIFICATION MARKING ON PRODUCT

Replaces E180306 dated December 19, 1998, filed National Draeger Inc..
394331002 **Underwriters Laboratories Inc.®** 611/03605/3
47

For information on placing an order for UL Listing Cards in a 3 × 5 inch card format, please refer to the enclosed ordering information.

UNDERWRITERS LABORATORIES INC.

A not-for-profit organization dedicated to public safety and committed to quality service

Northbrook, Illinois • (847) 272-8800
Melville, New York • (516) 271-6200
Santa Clara, California • (408) 985-2400
Research Triangle Park, North Carolina • (919) 549-1400
Camas, Washington • (360) 817-5500

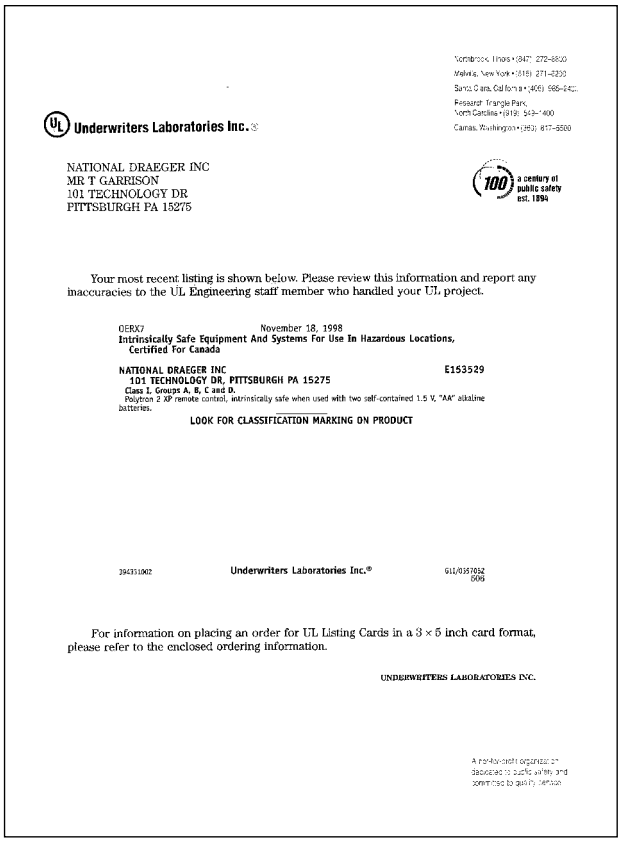

Underwriters Laboratories Inc.®

NATIONAL DRAEGER INC
MR T GARRISON
101 TECHNOLOGY DR
PITTSBURGH PA 15275

100 a century of public safety est. 1894

Your most recent listing is shown below. Please review this information and report any inaccuracies to the UL Engineering staff member who handled your UL project.

OERX7 November 18, 1998
Intrinsically Safe Equipment And Systems For Use In Hazardous Locations, Certified For Canada

NATIONAL DRAEGER INC **E153529**
101 TECHNOLOGY DR, PITTSBURGH PA 15275
Class I, Groups A, B, C and D.
Polytron 2 XP remote control, intrinsically safe when used with two self-contained 1.5 V, "AA" alkaline batteries.
LOOK FOR CLASSIFICATION MARKING ON PRODUCT

394331002 **Underwriters Laboratories Inc.®** 611/03570/2
506

For information on placing an order for UL Listing Cards in a 3 × 5 inch card format, please refer to the enclosed ordering information.

UNDERWRITERS LABORATORIES INC.

A not-for-profit organization dedicated to public safety and committed to quality service

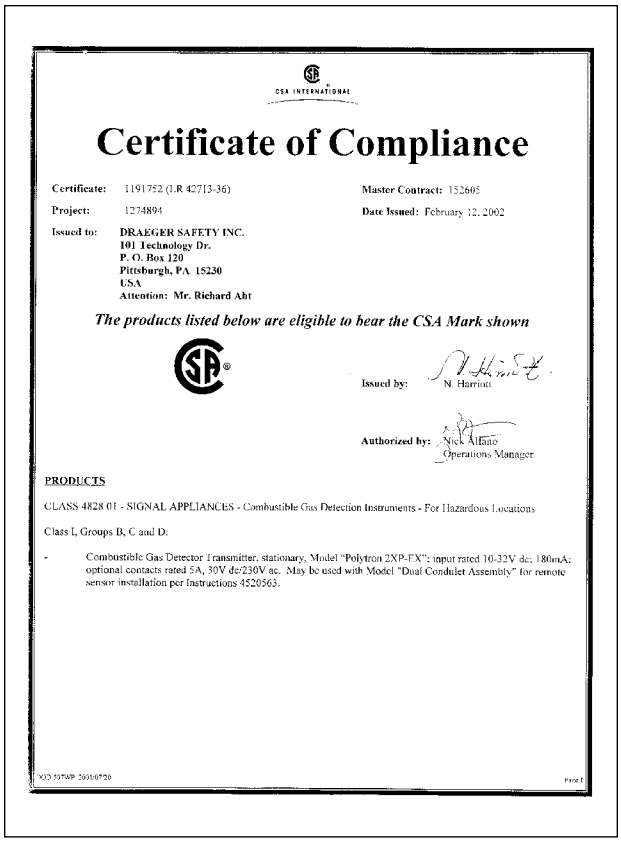

CSA INTERNATIONAL

Certificate of Compliance

Certificate: 1191752 (LR 42713-36) **Master Contract:** 152605

Project: 1274894 **Date Issued:** February 12, 2002

Issued to: **DRAEGER SAFETY INC.**
101 Technology Dr.
P. O. Box 120
Pittsburgh, PA 15230
USA
Attention: Mr. Richard Abt

The products listed below are eligible to bear the CSA Mark shown

Issued by: N. Harrison

Authorized by: Nick Allano
Operations Manager

PRODUCTS

CLASS 4828 01 - SIGNAL APPLIANCES - Combustible Gas Detection Instruments - For Hazardous Locations

Class I, Groups B, C and D:

- Combustible Gas Detector Transmitter, stationary, Model "Polytron 2XP-EX"; input rated 10-32V dc; 180mA; optional contacts rated 5A, 30V dc/230V ac. May be used with Model "Dual Conduit Assembly" for remote sensor installation per Instructions 4520563.

DQD 507WP 2001/07/20 Page 1

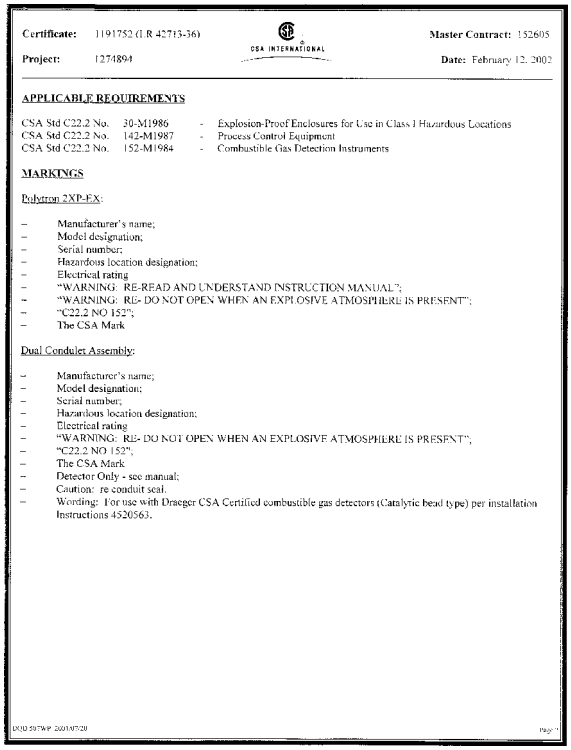

Certificate: 1191752 (LR 42713-36) **Master Contract:** 152605

CSA INTERNATIONAL

Project: 1274894 **Date:** February 12, 2002

APPLICABLE REQUIREMENTS

CSA Std C22.2 No. 30-M1986 - Explosion-Proof Enclosures for Use in Class I Hazardous Locations
CSA Std C22.2 No. 142-M1987 - Process Control Equipment
CSA Std C22.2 No. 152-M1984 - Combustible Gas Detection Instruments

MARKINGS

Polytron 2XP-EX:

- Manufacturer's name;
- Model designation;
- Serial number;
- Hazardous location designation;
- Electrical rating
- "WARNING: RE-READ AND UNDERSTAND INSTRUCTION MANUAL";
- "WARNING: RE- DO NOT OPEN WHEN AN EXPLOSIVE ATMOSPHERE IS PRESENT";
- "C22.2 NO 152";
- The CSA Mark

Dual Conduit Assembly:

- Manufacturer's name;
- Model designation;
- Serial number;
- Hazardous location designation;
- Electrical rating
- "WARNING: RE- DO NOT OPEN WHEN AN EXPLOSIVE ATMOSPHERE IS PRESENT";
- "C22.2 NO 152";
- The CSA Mark
- Detector Only - see manual;
- Caution: re conduit seal.
- Wording: For use with Draeger CSA Certified combustible gas detectors (Catalytic bead type) per installation Instructions 4520563.

DQD 507WP 2001/07/20 Page 2

DEMKO
Testing and Certification

1. **CERTIFICATE OF CONFORMITY**

2. DEMKO No. **98E. 123511**

3. This certificate is issued for **Gas Detectors**

type **Polytron 2 XP-Ex Sensing Head**

4a. Manufactured by **Draeger Safety, Inc., 101 Technology Drive Pittsburgh, PA 15275, USA**

4b. and submitted by **The Manufacturer**

5. This electrical apparatus and any acceptable variation thereto is specified in the Appendix to this certificate and the documents therein referred to.

6. DEMKO being an Approval Certification Body in accordance with Article 14 of the Council Directive of the European Communities of 18th December 1975, document 76/117/EEC, confirms that the apparatus has been found to comply with the Harmonized European Standards:

EN 50014, 2 Edition December 1992
EN 50018, 2 Edition August 1994

7. The apparatus marking shall include the code:

EEx d IIC T4 / T6

8. The supplier of the electrical apparatus referred to in this certificate has the responsibility to ensure that the apparatus conforms to the specification laid down in the Appendix to this certificate and has satisfied routine verifications and tests specified therein.

9. The apparatus may be marked with the Distinctive Community Mark specified in Annex II to the Council Directive of 16 January 1984, document 84/47/EEC. A facsimile of this mark is printed at the top of this certificate. The marking of the equipment shall be visible, legible and durable.

For and on behalf of DEMKO
Jakob Nittegaard
Department Manager

Herlev, 1998-04-29

This certificate is only allowed to be rendered in entirety and without alterations.

DEMKO A/S Testing and Certification, P.O. Box 514, Lyskaer 8, DK-2730 Herlev, Denmark
Phone +45 44 85 65 65 Telefax +45 44 85 65 00 e-mail: demko@demko.dk

A subsidiary of
Underwriters Laboratories Inc.®

DEMKO
Testing and Certification

APPENDIX I

to Certificate of Conformity No. 98E.123511

THIS APPROVAL APPLIES TO

Gas Detector
Marked: "Dräger"
1) With solid cover or with glass window, **Type**: Polytron 2 XP-Ex Sensing Head
Supply: 10 - 32 VDC, 4.75W
Protected for use in potentially explosive atmospheres (flameproof enclosure)
EEx d IIC T4 for Ambient temperature range: -40°C ≤ Tamb ≤ +80°C
EEx d IIC T6 for Ambient temperature range: -40°C ≤ Tamb ≤ +40°C

Manufactured by:
Draeger Safety, Inc.
101 Technology Drive
Pittsburgh, PA 15275
USA

Submitted by:
The Manufacturer

The product type has been tested in accordance with the European Standard EN 50014, 2 Edition December 1992 and EN 50018, 2 Edition August 1994.

The approval applies to products, strictly identical with the submitted and approved product type. If you make any alteration of the product, including the marking, you are obliged to inform DEMKO about this by letter.

DESCRIPTION OF THE APPARATUS

The gas detector is built up around a flameproof aluminium or stainless steel enclosure which allows access for one cable/conduit entry on one side and the sensor assembly on the opposite side. The Gas detector enclosure may be solid or with a glass window. Two different "d" housings can be used: AKRON (KEMA Certificate Ex-95.D.9284 U) or ADALET (DEMKO Ex-97.D.122443 U) The Gas Detectors are mounted with sensors type PR-NPT or PR- M certified by DMT under Certificate number: DMT 97 ATEX E 001 X.

A subsidiary of
Underwriters Laboratories Inc.®

DEMKO
Testing and Certification

APPENDIX I

to Certificate of Conformity No. 98E.123511

SPECIAL CONDITIONS FOR SAFE USE

Before opening the enclosure in a flammable atmosphere the circuits must be interrupted.

The approval applies to equipment without cable glands. When mounting the flameproof enclosure in a hazardous area, only flameproof entry devices such as stopping boxes or flameproof cable glands certified to EN 50018 must be used.

DRAWINGS

Description	Number	Date
Assy, Appvl, UL/CENELEC, P2, XP-EX	4543030, Rev 0	1997-12-10
Label, Appvl, CENELEC Polytron 2 XP-Ex	4543031, Rev 1	1998-03-16

The validity of this Certificate will in accordance with The Council Directive 94/9/EC Articles 14 and 15 expire on 30 June 2003. This means that the equipment is not to be marketed after that day. From 1 July 2003 equipment and protective systems intended for use in potentially explosive atmospheres are to be certified to Directive 94/9/EC.

The approval entitles the licensee to provide the product with the registered approval mark ⓓ and the Epsilon-x mark Ex.

For and on behalf of DEMKO
Jakob Nittegaard
Department Manager

Herlev, 1998-04-29

Examiner:
Kenneth Kofoed

This certificate is only allowed to be rendered in entirety and without alterations.

DEMKO A/S Testing and Certification, P.O. Box 514, Lyskaer 8, DK-2730 Herlev, Denmark
Phone +45 44 85 65 65 Telefax +45 44 85 65 00 e-mail: demko@demko.dk

A subsidiary of
Underwriters Laboratories Inc.®

DEMKO
Testing and Certification

1. **CERTIFICATE OF CONFORMITY**

2. DEMKO No. **98E. 124553**

3. This certificate is issued for **Remote Control Unit**

type **Dräger Polytron 2XP Remote Control.**

4a. Manufactured by **Dräger Safety Inc.**
101 Technology Dr. Pittsburgh, PA 15275.
U.S.A.

4b. and submitted by **The Manufacturer.**

5. This electrical apparatus and any acceptable variation thereto are specified in the Appendix to this certificate and the documents therein referred to.

6. DEMKO being an Approval Certification Body in accordance with Article 14 of the Council Directive of the European Communities of 18th December 1975, document 76/117/EEC, confirms that the apparatus has been found to comply with the harmonized European Standards:

EN 50014, 2nd Edition December 1992
EN 50020, 2nd Edition August 1994

7. The apparatus marking shall include the code:

EEx ia IIC T4.

8. The supplier of the electrical apparatus referred to in this certificate has the responsibility to ensure that the apparatus conforms to the specification laid down in the Appendix to this certificate and has satisfied routine verifications and tests specified therein.

9. The apparatus may be marked with the Distinctive Community Mark specified in Annex II to the Council Directive of 16 January 1984, document 84/47/EEC. A facsimile of this mark is printed at the top of this certificate. The marking of the equipment shall be visible, legible and durable.

For and on behalf of DEMKO
Jakob Nittegaard
Department Manager

Herlev, 10 December 1998

This certificate is only allowed to be rendered in entirety and without alterations.

DEMKO A/S Testing and Certification, P.O. Box 514, Lyskær 8, DK 2730 Herlev, Denmark
Phone +45 44 85 65 65 Telefax +45 44 85 65 00 e-mail: demko@demko.dk

A subsidiary of
Underwriters Laboratories Inc. ®

DEMKO
Testing and Certification

APPENDIX I

to Certificate of Conformity No. 98E.124553

THIS APPROVAL APPLIES TO

Remote Control Unit
Supply: Two size "AA" alkaline (LR6) batteries 1.5 V of the following type:
Panasonic AM3, Energizer E91, Duracell MN1500 and Varta 4006.
Ambient temperature range: -20°C ≤ Tamb ≤ +40°C
Marked: "Dräger"
01) **Type:** Polytron 2XP Remote Control.
Protected for use in potentially
Explosive atmospheres (Intrinsic Safety)
EEx ia IIC T4

Manufactured by:
Dräger Safety Inc.
101 Technology Dr.
Pittsburgh, PA 15275.
U.S.A.

Submitted by:
The Manufacturer

The product type has been tested in accordance with the European Standard EN 50014, 2nd Edition December 1992, and EN 50020, 2nd Edition August 1994.

The approval applies to products, strictly identical with the submitted and approved product type. If you make any alteration of the product, including the marking, you are obliged to inform DEMKO about this by letter.

DESCRIPTION OF THE APPARATUS

The Polytron 2XP Remote Control is a hand held infrared remote unit for use in conjunction with the Polytron 2XP-EX.

Power source: Two size "AA" Alkaline (LR6) batteries rated 1.5 Volts of the following types:
Panasonic AM3, Energizer E91, Duracell MN1500 or Varta 4006.
Enclosure: Polycarbonate enclosure with magnesia and titanium conductive coating.
Dimensions: Approximately 121 x 64 x 22 mm.

A subsidiary of
Underwriters Laboratories Inc. ®

DEMKO
Testing and Certification

APPENDIX I

to Certificate of Conformity No. 98E.124553

DRAWINGS

Number	Date	Description
4543046	07.29.98.	Schematic.
4543047	07.29.98.	Manufacturers description of safety.
4543048	07.29.98.	Assembly drawing.
4543054	07.29.98.	PCB Layout.
4543055	07.29.98.	Block diagram.
4543038	07.29.98.	Label drawing.

The validity of this Certificate will in accordance with The Council Directive 94/9/EC Articles 14 and 15 expire on 30 June 2003. This means that the equipment is not to be marketed after that day. From 1 July 2003 equipment and protective systems intended for use in potentially explosive atmospheres are to be certified to Directive 94/9/EC.

The approval entitles the licensee to provide the product with the registered approval mark Ⓓ1 and the Epsilon-x mark Ⓔ.

For and on behalf of DEMKO
Jakob Nittegaard
Department Manager

Herlev, 10 December 1998

Examiner:
Leonard R Fernando.

This certificate is only allowed to be rendered in entirety and without alterations.

DEMKO A/S Testing and Certification, P.O. Box 514, Lyskær 8, DK 2730 Herlev, Denmark
Phone +45 44 85 65 65 Telefax +45 44 85 65 00 e-mail: demko@demko.dk

A subsidiary of
Underwriters Laboratories Inc. ®

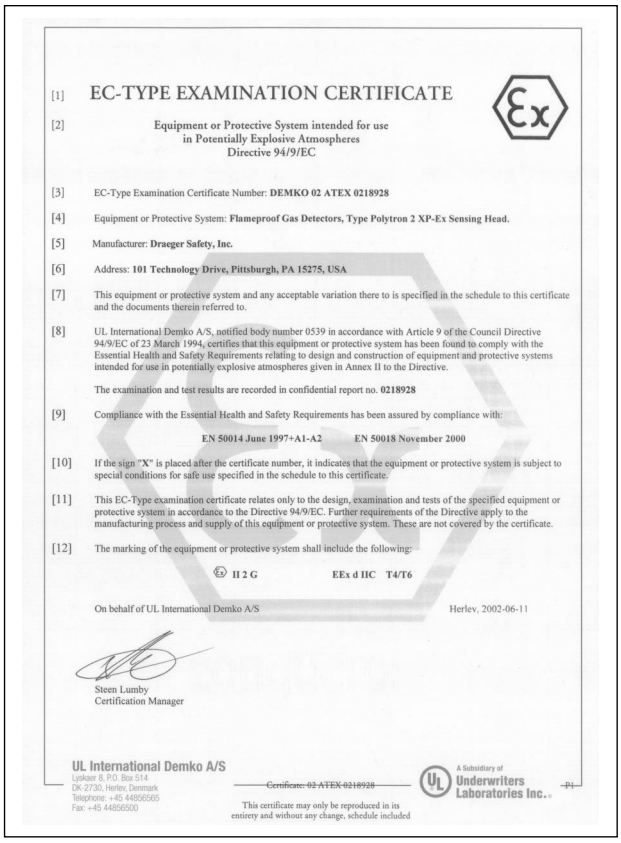

[1] EC-TYPE EXAMINATION CERTIFICATE

[2] Equipment or Protective System intended for use in Potentially Explosive Atmospheres Directive 94/9/EC

[3] EC-Type Examination Certificate Number: **DEMKO 02 ATEX 0218928**

[4] Equipment or Protective System: **Flameproof Gas Detectors, Type Polytron 2 XP-Ex Sensing Head.**

[5] Manufacturer: **Draeger Safety, Inc.**

[6] Address: **101 Technology Drive, Pittsburgh, PA 15275, USA**

[7] This equipment or protective system and any acceptable variation there to is specified in the schedule to this certificate and the documents therein referred to.

[8] UL International Demko A/S, notified body number 0539 in accordance with Article 9 of the Council Directive 94/9/EC of 23 March 1994, certifies that this equipment or protective system has been found to comply with the Essential Health and Safety Requirements relating to design and construction of equipment and protective systems intended for use in potentially explosive atmospheres given in Annex II to the Directive.

The examination and test results are recorded in confidential report no. **0218928**

[9] Compliance with the Essential Health and Safety Requirements has been assured by compliance with:

EN 50014 June 1997+A1-A2 **EN 50018 November 2000**

[10] If the sign "**X**" is placed after the certificate number, it indicates that the equipment or protective system is subject to special conditions for safe use specified in the schedule to this certificate.

[11] This EC-Type examination certificate relates only to the design, examination and tests of the specified equipment or protective system in accordance to the Directive 94/9/EC. Further requirements of the Directive apply to the manufacturing process and supply of this equipment or protective system. These are not covered by the certificate.

[12] The marking of the equipment or protective system shall include the following:

II 2 G **EEx d IIC T4/T6**

On behalf of UL International Demko A/S Herlev, 2002-06-11

Steen Lumby
Certification Manager

UL International Demko A/S
Lyskær 8, P.O. Box 514
DK-2730, Herlev, Denmark
Telephone: +45 44856565
Fax: +45 44856500

Certificate: 02 ATEX 0218928

A Subsidiary of Underwriters Laboratories Inc.®

P1

This certificate may only be reproduced in its entirety and without any change, schedule included

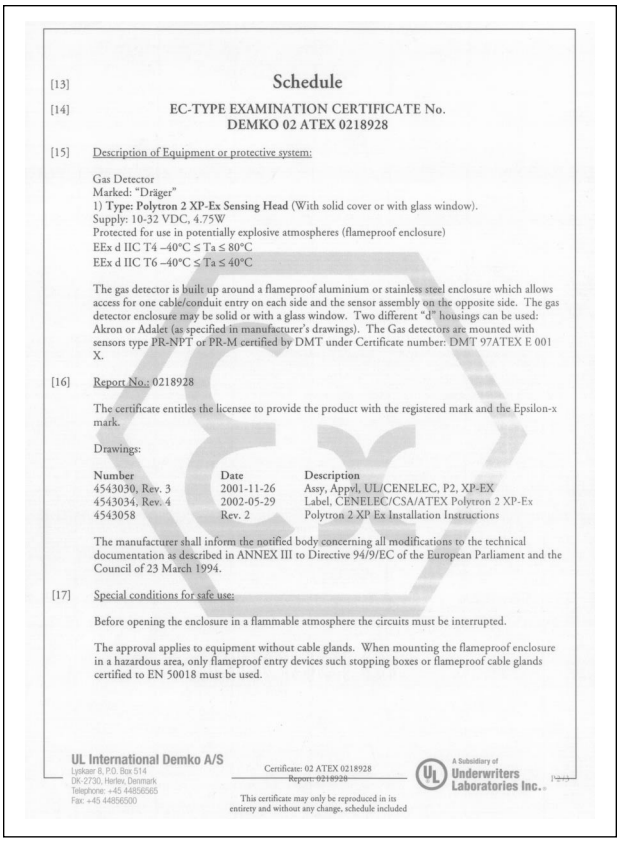

[13] Schedule

[14] EC-TYPE EXAMINATION CERTIFICATE No. DEMKO 02 ATEX 0218928

[15] Description of Equipment or protective system:

Gas Detector
Marked: "Dräger"
1) **Type: Polytron 2 XP-Ex Sensing Head** (With solid cover or with glass window).
Supply: 10-32 VDC, 4.75W
Protected for use in potentially explosive atmospheres (flameproof enclosure)
EEx d IIC T4 –40°C ≤ Ta ≤ 80°C
EEx d IIC T6 –40°C ≤ Ta ≤ 40°C

The gas detector is built up around a flameproof aluminium or stainless steel enclosure which allows access for one cable/conduit entry on each side and the sensor assembly on the opposite side. The gas detector enclosure may be solid or with a glass window. Two different "d" housings can be used: Akron or Adalet (as specified in manufacturer's drawings). The Gas detectors are mounted with sensors type PR-NPT or PR-M certified by DMT under Certificate number: DMT 97ATEX E 001 X.

[16] Report No.: 0218928

The certificate entitles the licensee to provide the product with the registered mark and the Epsilon-x mark.

Drawings:

Number	Date	Description
4543030, Rev. 3	2001-11-26	Assy, Appvl, UL/CENELEC, P2, XP-EX
4543034, Rev. 4	2002-05-29	Label, CENELEC/CSA/ATEX Polytron 2 XP-Ex
4543058	Rev. 2	Polytron 2 XP Ex Installation Instructions

The manufacturer shall inform the notified body concerning all modifications to the technical documentation as described in ANNEX III to Directive 94/9/EC of the European Parliament and the Council of 23 March 1994.

[17] Special conditions for safe use:

Before opening the enclosure in a flammable atmosphere the circuits must be interrupted.

The approval applies to equipment without cable glands. When mounting the flameproof enclosure in a hazardous area, only flameproof entry devices such stopping boxes or flameproof cable glands certified to EN 50018 must be used.

UL International Demko A/S
Lyskær 8, P.O. Box 514
DK-2730, Herlev, Denmark
Telephone: +45 44856565
Fax: +45 44856500

Certificate: 02 ATEX 0218928
Report: 0218928

A Subsidiary of Underwriters Laboratories Inc.®

P2

This certificate may only be reproduced in its entirety and without any change, schedule included

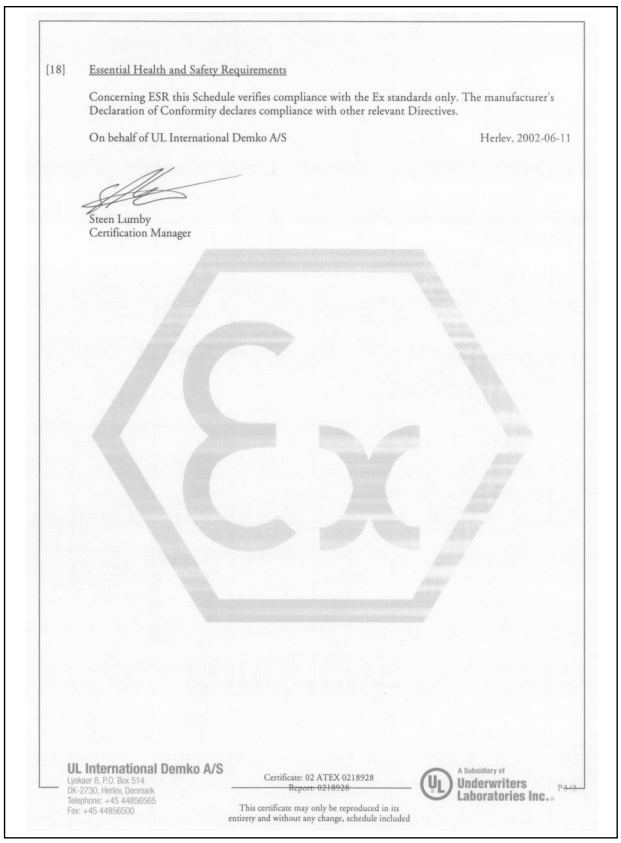

[18] Essential Health and Safety Requirements

Concerning ESR this Schedule verifies compliance with the Ex standards only. The manufacturer's Declaration of Conformity declares compliance with other relevant Directives.

On behalf of UL International Demko A/S Herlev, 2002-06-11

Steen Lumby
Certification Manager

UL International Demko A/S
Lyskær 8, P.O. Box 514
DK-2730, Herlev, Denmark
Telephone: +45 44856565
Fax: +45 44856500

Certificate: 02 ATEX 0218928
Report: 0218928

A Subsidiary of Underwriters Laboratories Inc.®

P3

This certificate may only be reproduced in its entirety and without any change, schedule included

EC Declaration of Conformity

We Draeger Safety, Inc.
101 Technology Drive
Pittsburgh, PA 15275-1057
USA

Declare that the product(s):
Polytron 2 XP Ex Transmitter for Catalytic Combustion Sensors

Following the provisions of:

Article 9 of Directive 94/9/EC (Essential Health and Safety Requirements) of 23 March 1994 and of Directive 89/336/EEC (EMC Directive).

Is in conformity with the harmonized standard(s) or other normative document(s) as listed in the annex.

Annex of Declaration of Conformity

Product(s): Polytron 2 XP Ex

The conformity of the product described above with the provisions of Directive 94/9/EC is provided by the observance of the following standards:

EN 50014 1997 +A1 1999, +A2 1999
EN 50018 2000

The conformity of the product described above with the provisions of Directive 89/336/EEC is provided by the observance of the following standards:

EN 50270 1999

Notified Body:

UL International DEMKO A/S Testing and Certification
P.O. Box 514, Lyskaer 8
DK-2730 Herlev, Denmark

Louis Stern
Director of Engineering and Development
Draeger Safety, Inc.
101 Technology Drive
Pittsburgh, PA 15275-1057
USA

DSI APPVL No. 4543264, Rev 0

Addresses

Draeger Safety, Inc.
Gas Detection System Center
10450 Stancliff
Suite 220
Houston, Texas 77099
U.S.A.
Phone +1 281 - 498 - 1082
Fax +1 281 - 498 - 5190

DrägerService
Houston, Texas
10450 Stancliff
Suite 220
Houston, TX 77099
U.S.A.
Phone +1 281 - 498 - 1082
Fax +1 281 - 498 - 5190

DrägerService
Pittsburgh, Pennsylvania
101 Technology Drive
Pittsburgh, PA 15275
U.S.A.
Phone +1 888 - 794 - 3806
Fax +1 888 - 794 - 3807

Dräger Safety AG & Co. KGaA
Gas Detection System Center
Revalstr. 1
D- 23560 Lübeck
Germany
Phone +49 451 882 - 27 94
Fax +49 451 882 - 49 91

Draeger Industrie S.A.
Gas Detection System Center
3c, route de la Fédération
F - 67025 Strasbourg Cedex
France
Phone +33 388 - 40 76 76
Fax +33 388 - 40 76 67

Draeger Ltd.
Gas Detection System Center
Ullswater Close
Kitty Brewster Industrial Estate
Blyth, Northumberland
NE24 4RG
United Kingdom
Phone +44 1670 - 35 28 91
Fax +44 1670 - 36 17 32

Draeger South East Asia Pte. Ltd.
Gas Detection System Center
67, Ayer Rajah Crescent #06-03
SGP-0513 Singapore
Phone +65 872 92 88
Fax +65 773 20 33

Beijing Fortune Draeger Safety Equipment Co. Ltd.
Gas Detection System Center
Jixiang Lu, B Area
Beijing Tianzhu Airport Industrial Zone
Houshayu
Shunyi County
Beijing, 101300
P.R. China
Phone +86 10 69498000
Fax +86 10 69498006

Draeger Safety, Inc.
10450 Stancliff
Suite 220
Houston, Texas 77099
Phone: (281) 498-1082
FAX: (281) 498-5190
http:\\www.draeger.com\gds
http:\\www.draeger.net

P/N - 4543040 Rev 4. - Serial no. ERSC-F001

	QTY	PART No.	DESCRIPTION	DWG No.	Component/Vendor ID	ITEM
1	1	A104481-1	FIRE ALARM CONTROL PANEL 10 ZONE			1
	20	1050538-1	FIRE ALARM STATION, XP			2
	16	1050538-2	STROBE/HORN, XP			3
	14	A104495-1	END OF LINE RESISTOR			4
	2	A104487-1	BATTERIES FOR FIRE ALARM PANEL			5
	17	1050538-3	HEAT DETECTOR, 93°C (200°F), XP			6
	1000'	A122216-1	CABLE, FIRE ALARM, 2C X 16AWG			7
1	1	D71683-48	BOX, JUNCTION, 36 X 24 X 6			8
1	1	D71683-49	PANEL			9
1	1	1050588	WINDOW KIT, ENCLOSURE			10

NOTE:

1. MOUNT FIRE ALARM PANEL (ITEM 1) ON TO CENTER OF ENCLOSURE PANEL (ITEM 9). INSTALL WINDOW KIT (ITEM 10) TO ENCLOSURE (ITEM 8) DOOR, PER MANUFACTURER INSTRUCTIONS. PUT ENCLOSURE PANEL (ITEM 9) INTO ENCLOSURE (ITEM 8) AND MOUNT ENCLOSURE (ITEM 8) NEAR ENZAN STATION AND PLUM IN TO PURGE SYSTEM. SEE DRAWING 1049751 FOR PURGING LAYOUT.

2. SEE SHT 5 OF 5 FOR COMPONENT LOCATIONS

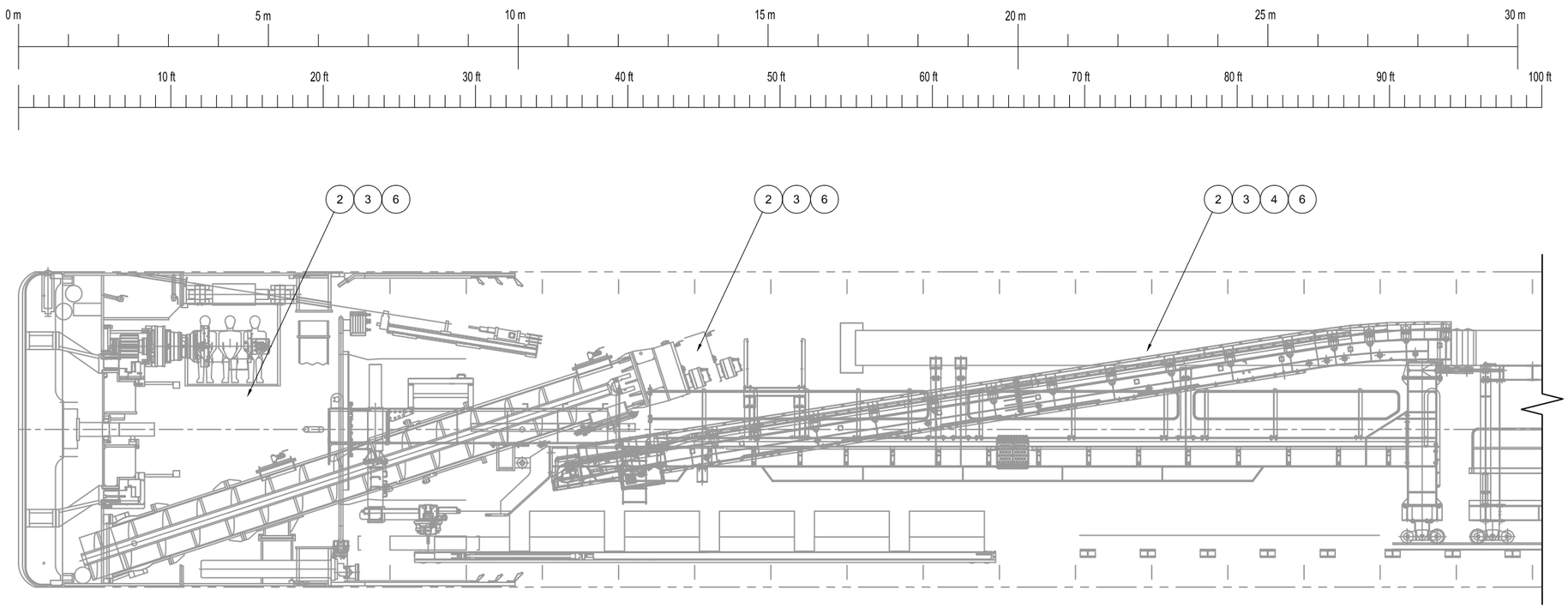

BRIDGE

PROPRIETARY NOTICE
The information disclosed herein is the sole property of The Robbins Company and remains the sole property. It shall not be disclosed in full or part, used by or disclosed to any other party without prior written consent of The Robbins Company. By accepting this information, recipient agrees to solicit the Robbins Company's written consent to any other party whatsoever in the condition. This material is on loan only, and is to be returned upon request to The Robbins Company.

MACHINE	NEXT ASSY
EPB2016-376/377	1046950

UNLESS NOTED ALL DIMS ARE mm

TOLERANCES UNLESS NOTED

FAB (mm)		MACHINING (mm)	
0-300	± 1.5	X	± 1.5
300-1500	± 3	X.X	± 1.0
1500-6000	± 6	X.XX	± .40
6000+	± 12	X.XXX	± .100
		ANGLES	± 1
		SURFACE	6.3
		Ra	

THIRD ANGLE PROJECTION

DIMENSIONS (X) ARE REFERENCE

ALL GEOMETRIC DIMENSIONING & TOLERANCING PER ANSI Y14.5-2009

REV	DESCRIPTION	REV'D BY/ DATE	APP'D BY/ DATE

TITLE: FIRE ALARM SYSTEM ASSY SAN FRANCISCO

SIZE	DWG No.	REV	SHT	SCALE
D	1050572	0	1 OF 5	1:50 DO NOT SCALE

DRAWN BY: P.BRENNAN DATE: 6/28/2012
CHECKED STANDARDS: P.BRENNAN
CHECKED DESIGN: D.HOBBS
WEIGHT TOTAL:
APPROVED BY: D.HOBBS DATE: 6/28/2012

Robbins

www.TheRobbinsCompany.com

1050572

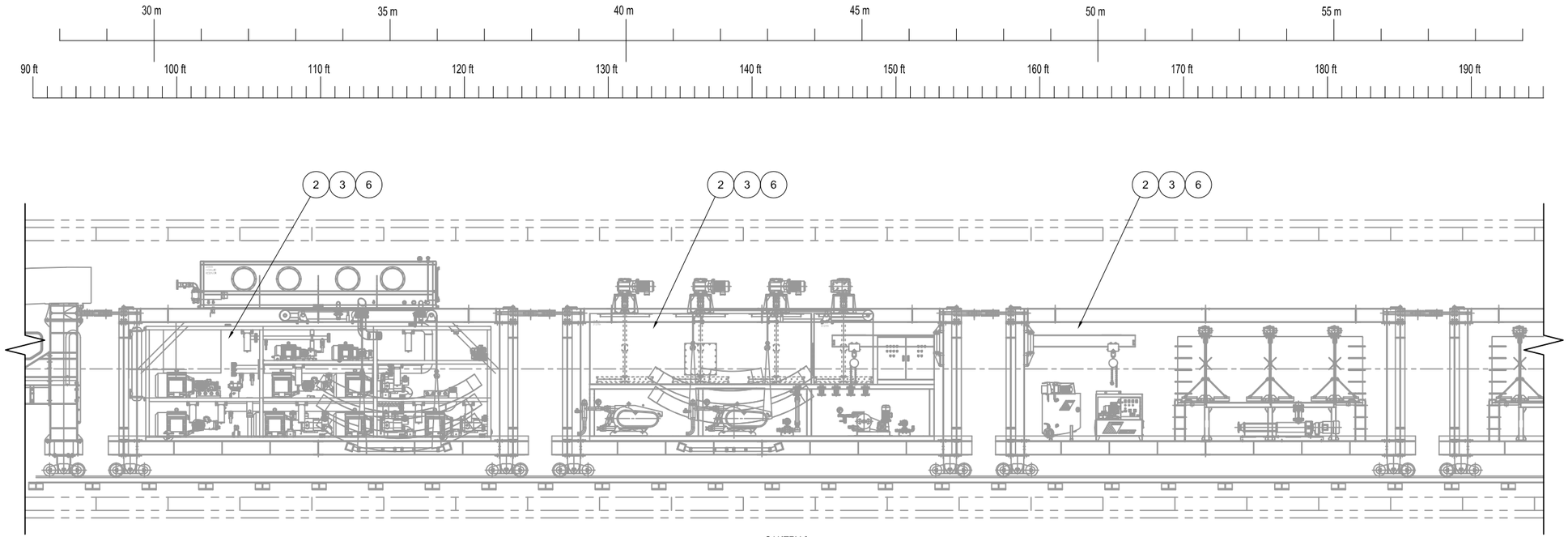

NOTE:
SEE SHT 5 OF 5 FOR COMPONENT LOCATIONS

RIGHT HAND SIDE

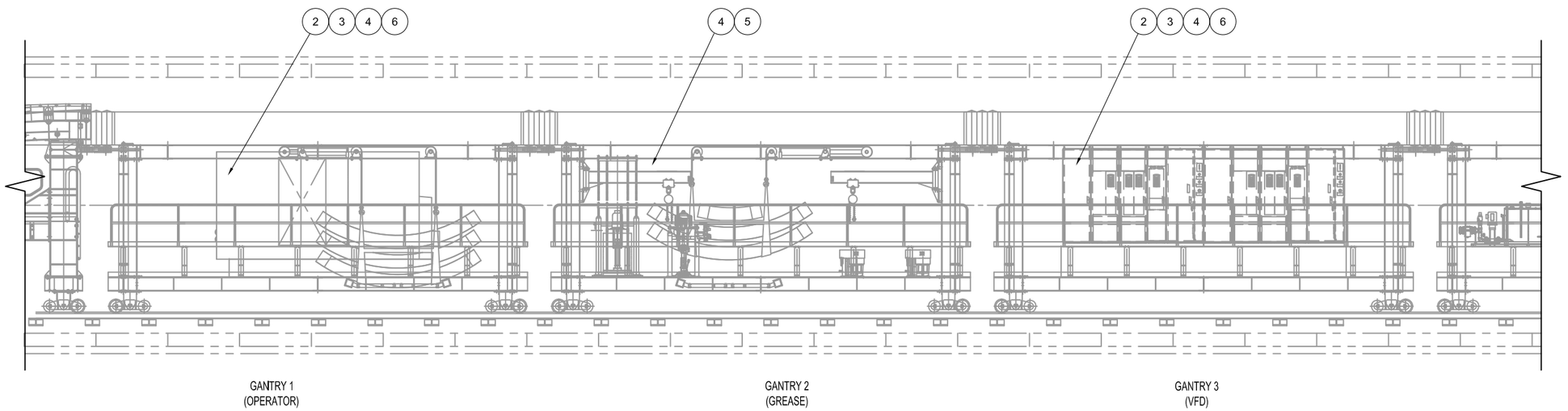

LEFT HAND SIDE

1050572

PROPRIETARY NOTICE
This information disclosed hereon is the sole property of The Robbins Company and is not to be disclosed to others and not to be duplicated in full or part, used by, or disclosed to any person, firm or corporation for any purpose whatsoever without the written permission of The Robbins Company. By accepting this information, recipient agrees to indemnify The Robbins Company against any loss or liability from any breach of this agreement or from any use of this information inconsistent with the conditions. This material is on loan only, and upon request is to be returned to The Robbins Company. The recipient agrees to keep confidential all information contained herein except to the extent he is authorized in writing by The Robbins Company.

MACHINE	NEXT ASSY
EPB2016-376/377	1046950

UNLESS NOTED ALL DIMS ARE mm
TOLERANCES UNLESS NOTED

0-300	± 1.5
300-1500	± 3
1500-6000	± 6
6000+	± 12

X	± 1.5
X.X	± 1.0
X.XX	± .40
X.XXX	± .100
ANGLES	± 1
SURFACE	63

THIRD ANGLE PROJECTION
DIMENSIONS (X) ARE REFERENCE
ALL GEOMETRIC DIMENSIONING & TOLERANCING PER ANSI Y14.5-2009

REV	DESCRIPTION	REV'D BY / DATE	APP'D BY / DATE

TITLE: FIRE ALARM SYSTEM ASSY SAN FRANCISCO

SIZE	DWG No.	REV	SHT	SCALE
D	1050572	0	2 of 5	1:50

DO NOT SCALE

DRAWN BY	CHECKED STANDARDS
P.BRENNAN	P.BRENNAN
DATE	CHECKED DESIGN
6/28/2012	D.HOBBS
WEIGHT TOTAL	APPROVED BY
	D.HOBBS
	DATE
	6/28/2012

Robbins

www.TheRobbinsCompany.com

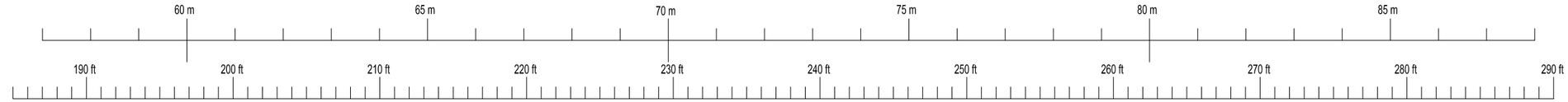

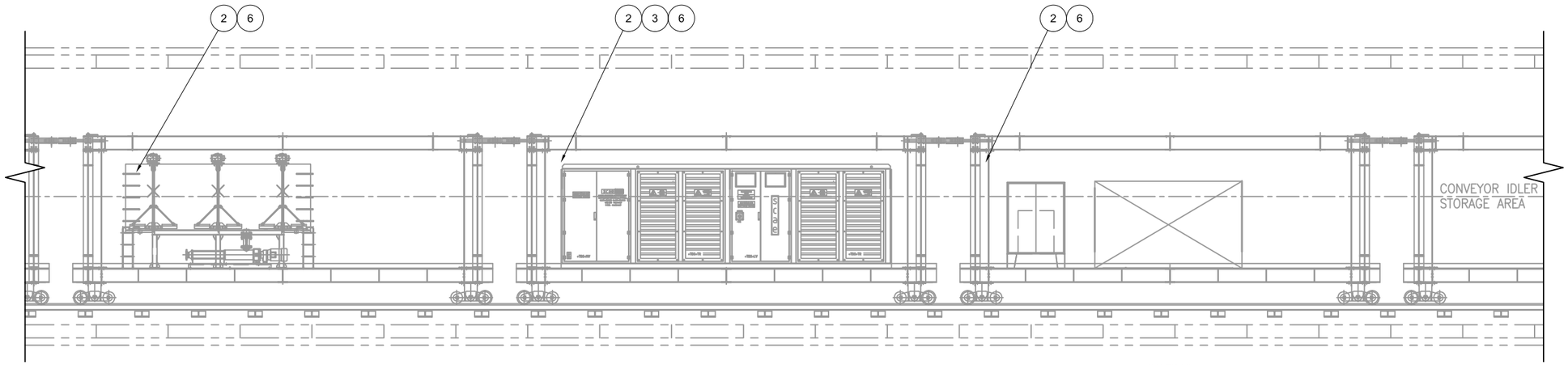

GANTRY 4
(BENTONITE)

GANTRY 5
(HV TRANSFORMER)

GANTRY 6
(EMERGENCY GENERATOR)

NOTE:
SEE SHT 5 OF 5 FOR COMPONENT LOCATIONS

RIGHT HAND SIDE

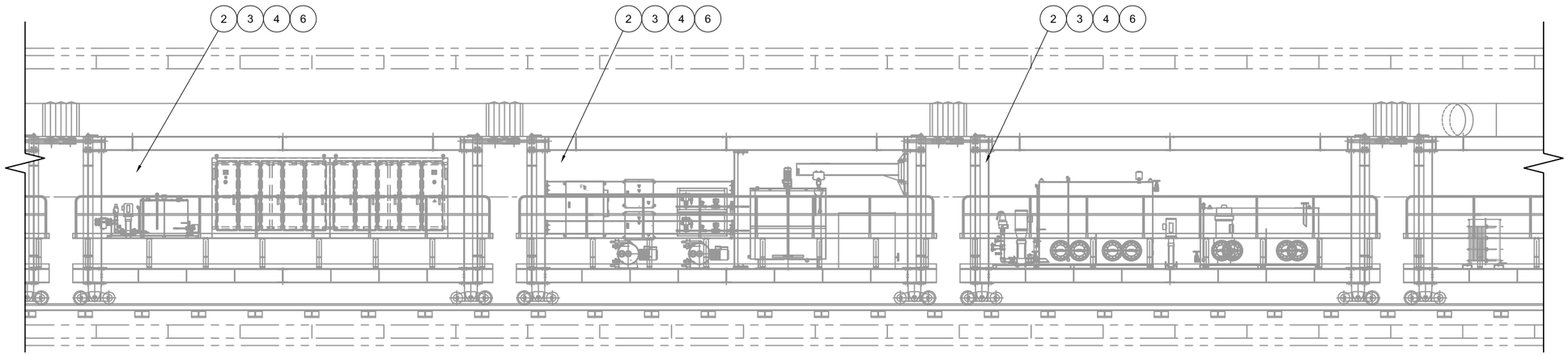

GANTRY 4
(VFD COOLING / POWER)

GANTRY 5
(PRIMARY FOAM)

GANTRY 6
(DE-WATER / COOLING WATER)

LEFT HAND SIDE

PROPRIETARY NOTICE
This information disclosed hereon is the sole property of The Robbins Company and/or its subsidiaries. It shall not be duplicated in full or part, used by, or disclosed to any other party without the express written permission of the Company. By accepting this information, recipient agrees to indemnify The Robbins Company and/or its subsidiaries whatsoever to the conditions. This material is not to be sold, licensed or otherwise disposed of to any third party without the express written permission of The Robbins Company.

MACHINE	NEXT ASSY
EPB2016-376/377	1046950

UNLESS NOTED ALL DIMS ARE mm
TOLERANCES UNLESS NOTED

0-300	± 1.5	X	± 1.5
300-1500	± 3	X.X	± 1.0
1500-6000	± 6	X.XX	± .40
6000+	± 12	X.XXX	± .100
		ANGLES	± 1°
		SURFACE	63

THIRD ANGLE PROJECTION
DIMENSIONS (X) ARE REFERENCE
ALL GEOMETRIC DIMENSIONING & TOLERANCING PER ANSI Y14.5-2009

REV	DESCRIPTION	REV'D BY / DATE	APP'D BY / DATE

TITLE: FIRE ALARM SYSTEM ASSY SAN FRANCISCO

SIZE	DWG No.	REV	SHT	SCALE
D	1050572	0	3 of 5	1:50 DO NOT SCALE

DRAWN BY	CHECKED BY/DATE
P.BRENNAN	P.BRENNAN
DATE 6/28/2012	CHECKED DESIGN D.HOBBS
WEIGHT TOTAL	APPROVED BY D.HOBBS
	DATE 6/28/2012

Robbins
www.TheRobbinsCompany.com

1050572

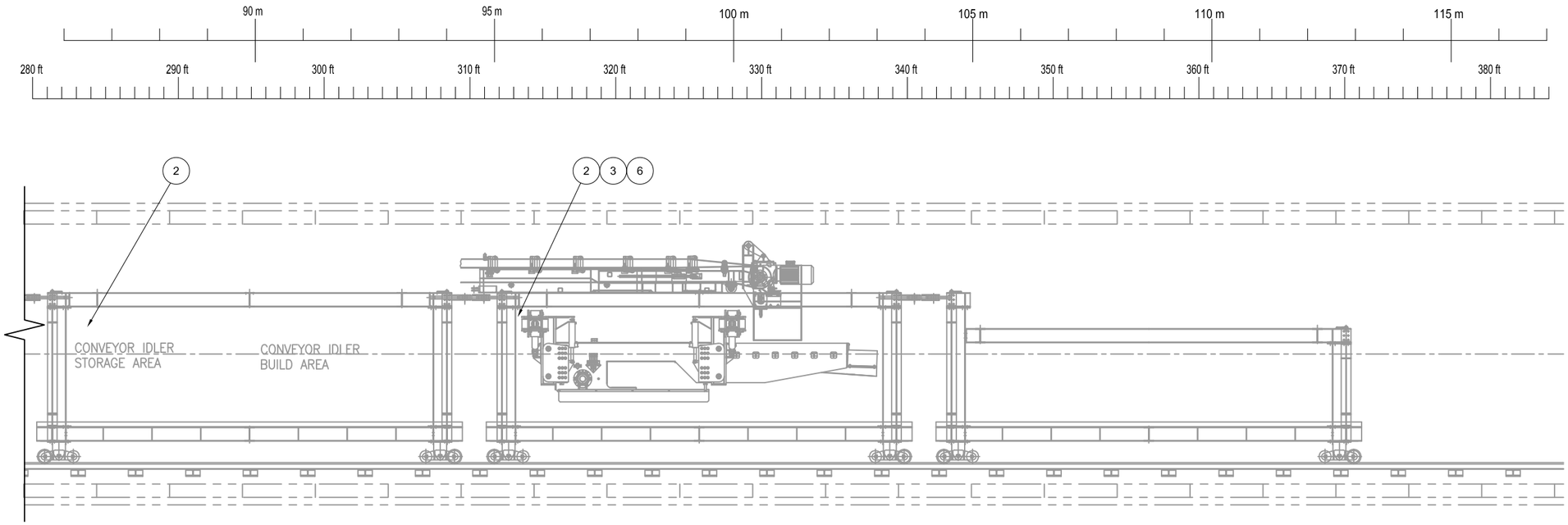

NOTE:
SEE SHT 5 OF 5 FOR COMPONENT LOCATIONS

RIGHT HAND SIDE

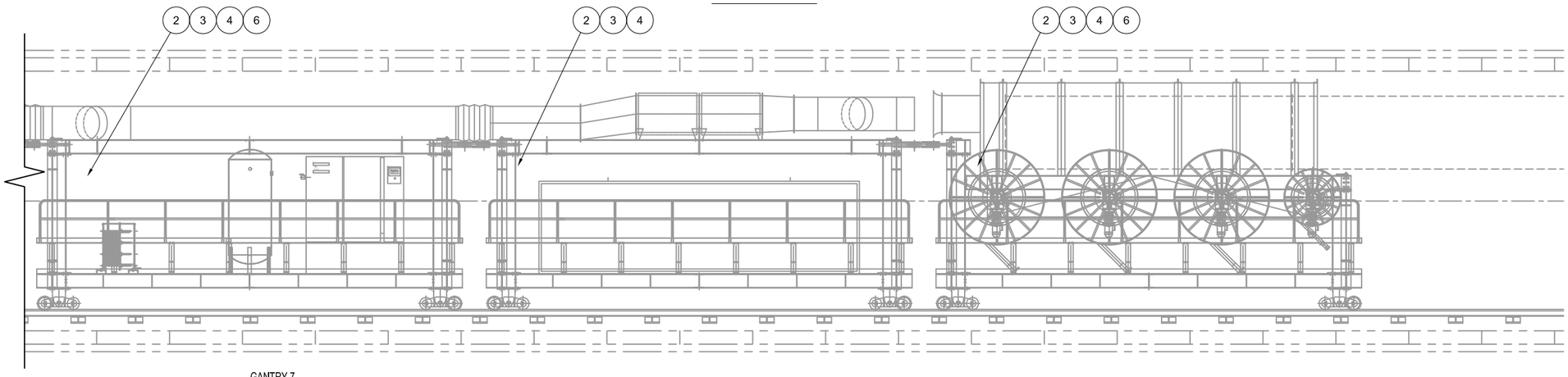

LEFT HAND SIDE

PROPRIETARY NOTICE
This information disclosed hereon is the sole property of The Robbins Company and is considered confidential. It shall not be duplicated in full or part, used by, or disclosed to any person or entity without the written permission of The Robbins Company. By accepting this information, recipient agrees to hold it in confidence and to use it solely for the purpose for which it was furnished to it by The Robbins Company.

MACHINE	NEXT ASSY
EPB2016-378/377	1046950

UNLESS NOTED ALL DIMS ARE mm
TOLERANCES UNLESS NOTED
FRACTIONS: 0-300 ± 1/2; 300-1500 ± 3; 1500-6000 ± 6; 6000+ ± 12
DECIMALS: X ± 1.5; .XX ± 1.0; .XXX ± .40; .XXXX ± .100; ANGLES ± 1; SURFACE 63
THIRD ANGLE PROJECTION
DIMENSIONS IN () ARE REFERENCE
ALL GEOMETRIC DIMENSIONING & TOLERANCING PER ANSI Y14.5-2009

REV	DESCRIPTION	REV'D BY / DATE	APP'D BY / DATE

TITLE: FIRE ALARM SYSTEM ASSY SAN FRANCISCO

SIZE	DWG NO.	REV	SHT	SCALE
D	1050572	0	4 OF 5	1:50

DO NOT SCALE

DRAWN BY	CHECKED STANDARDS
P.BRENNAN	P.BRENNAN
DATE	CHECKED DESIGN
6/28/2012	D.HOBBS
WEIGHT TOTAL	APPROVED BY
	D.HOBBS
	DATE
	6/28/2012

Robbins

www.TheRobbinsCompany.com

1050572

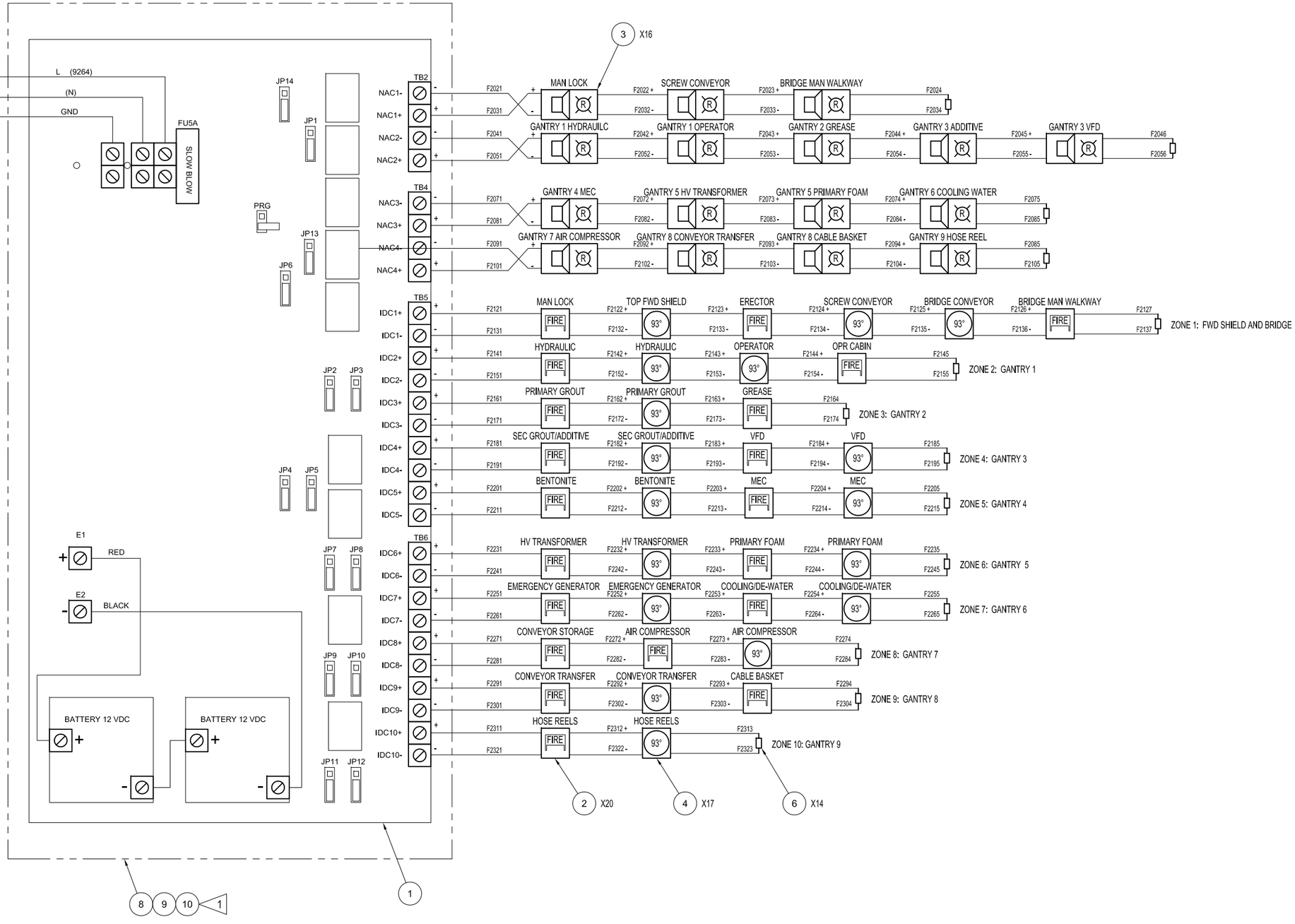

REV	DESCRIPTION			REV'D BY / DATE	APP'D BY / DATE
TITLE	FIRE ALARM SYSTEM ASSY SAN FRANCISCO				
SIZE D	DWG NO. 1050572	REV 0	SHT 5 OF 5	SCALE 1:1	DO NOT SCALE
DRAWN P.BRENNAN	DATE 6/28/2012	CHECKED STEWARD P.BRENNAN	CHECKED DESIGN D.HOBBS	APPROVED BY D.HOBBS	DATE 6/28/2012
WEIGHT TOTAL					

MACHINE: EPB2016-376377 | NEXT ASSY: 1046950

UNLESS NOTED ALL DIMS ARE mm
TOLERANCES UNLESS NOTED
FRACTIONS ± 1/64
0-300 ± 1.5 | X ± 1.5
300-1500 ± 3 | X.X ± 1.0
1500-6000 ± 5 | X.XX ± .40
6000+ ± 12 | X.XXX ± .100
ANGLES ± 1°
SURFACE
UNMACHINABLE PIECE PART
DIMENSIONS IN () ARE REFERENCE
ALL GEOMETRIC DIMENSIONING & TOLERANCING PER ANSI Y14.5-2009

PROPRIETARY NOTICE
This information disclosed hereon, to the sole property of Robbins Manufacturing Company and shall not be duplicated in full or part, used by, or disclosed to any party without the written consent of Robbins Manufacturing Company. By accepting this information, recipient agrees to use this information only for the purpose specified herein, and to return it upon request. Any reproduction of this drawing, in whole or in part, without written permission is prohibited.

www.TheRobbinsCompany.com

1050572

QTY	PART No.	DESCRIPTION	DWG No.	Component/Vendor ID	ITEM
4	A119720-1	CCTV CAMERA			1
1	A119721-1	CCTV PROC/DVR			2
8	A96612-1	CABLE CONNECTOR, BNC			3
100M	5750001204	TV COAXIAL CABLE 75 OHM RG59			4
1	1028718	CABLE, VGA, EXTENSION, 10FT			5
4	1049045	CCTV CAMERA POWER SUPPLY ENCL. ASSY.			6

NOTES:

1. MOUNT CCTV CAMERA POWER SUPPLY IN CLOSEST PURGED ENCLOSURE TO CAMERA LOCATION.

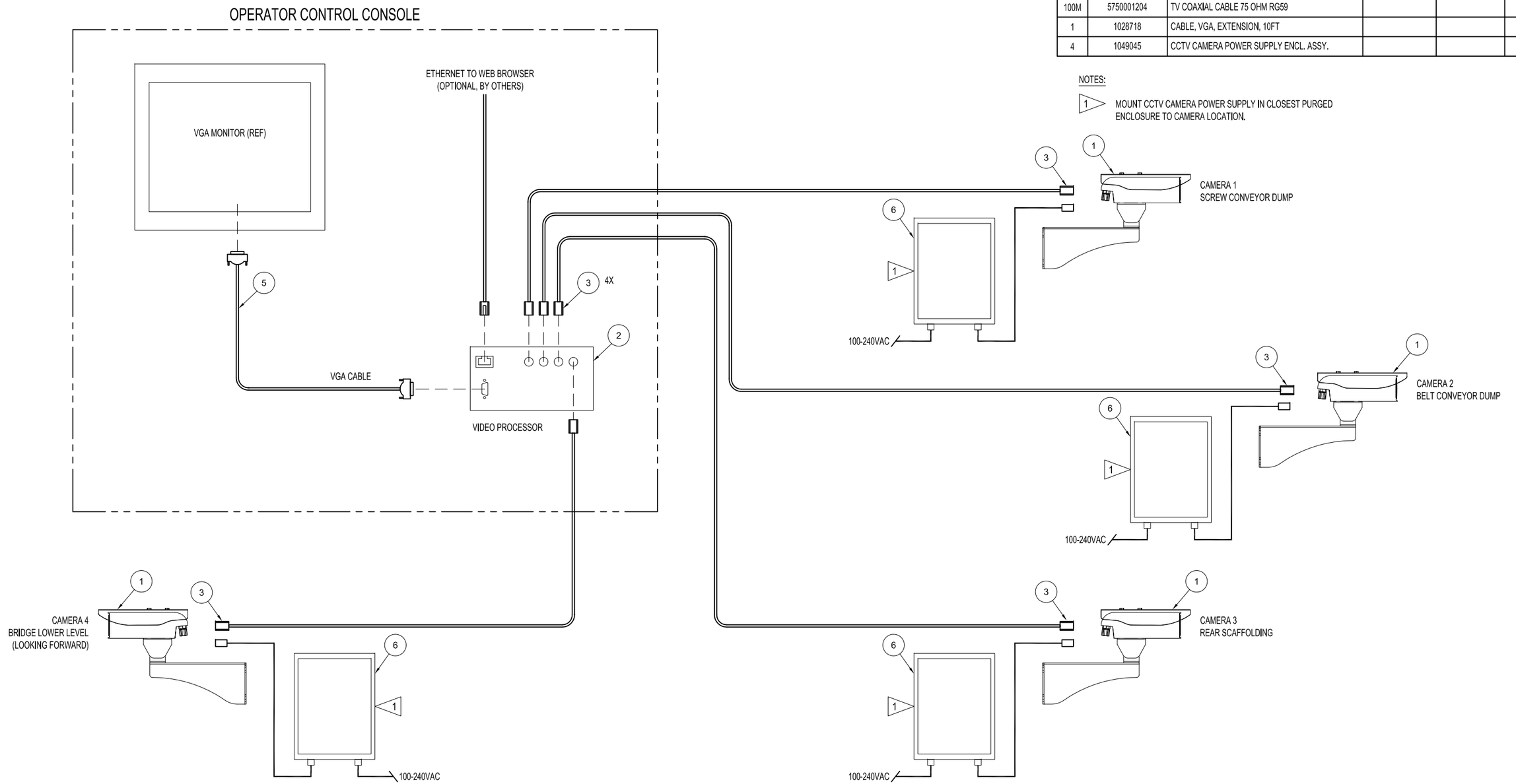

REV	DESCRIPTION	REVD BY/ DATE	APPD BY/ DATE

TITLE: TV SYSTEM INSTALLATION, CLASS 1 / DIV 2

MACHINE	NEXT ASSY
EPB2012-376/377	1046350

UNLESS NOTED ALL DIMS ARE mm
TOLERANCES UNLESS NOTED

0-300	± 1.5	X	± 1.0
300-1500	± 3	X.X	± 1.0
1500-6000	± 6	X.XX	± .40
6000+	± 12	X.XXX	± .100

MATERIAL: ANG ± 1°
SURFACE FINISH

THIRD ANGLE PROJECTION
DIMENSIONS (IN) ARE REFERENCE
ALL GEOMETRIC DIMENSIONING & TOLERANCING PER ANSI Y14.5-2009

SIZE	DWG No.	REV	SHT	SCALE
D	1050539	0	1 OF 1	1:1 DO NOT SCALE

DRAWN BY: P.BRENNAN DATE: 6/28/2012
CHECKED BY: P.BRENNAN
CHECKED DESIGN: D.HOBBS
WEIGHT TOTAL:
APPROVED BY: D.HOBBS DATE: 6/28/2012

Robbins

www.TheRobbinsCompany.com

1050539

PROPRIETARY NOTICE
The information disclosed hereon is the sole property of The Robbins Company and may not be used, disclosed to any non-duplicated in full or part, used by, or disclosed to any person, firm or corporation for any purpose whatsoever without the written permission of The Robbins Company. By accepting this information, recipient agrees to use such information only for the purpose authorized by The Robbins Company and to return it upon request and agrees that in accepting and using such information, the recipient will be bound by the foregoing conditions. The material is an illustration only, and is not to be used for construction purposes unless specifically stated to be so.

QTY	PART No.	DESCRIPTION	DWG No.	Component/Vendor ID	ITEM
9	1047080-1	PURGING SYSTEM WITH EXP PRESSURE LOSS ALARM SWITCH			1
9	1047080-3	1/2"T X 1/2"P STRAIGHT CONNECTOR			2
9	1047080-4	1/4" FLUSH CONNECTOR			3
9	1047080-5	1/2" FLUSH CONNECTOR			4
12	1047080-7	1-1/2" PIPE CONNECTOR			5
9	1047080-8	VENT			6
9	1047080-9	SURFACE MOUNTING KIT			7
15	A101445-7	ENCLOSURE WARING NAMEPLATE- CLASS 1			8

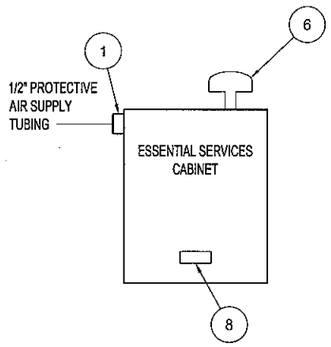

ESSENTIAL SERVICES CABINET PURGING
(SEE DETAIL 1 ON SHEET 2)

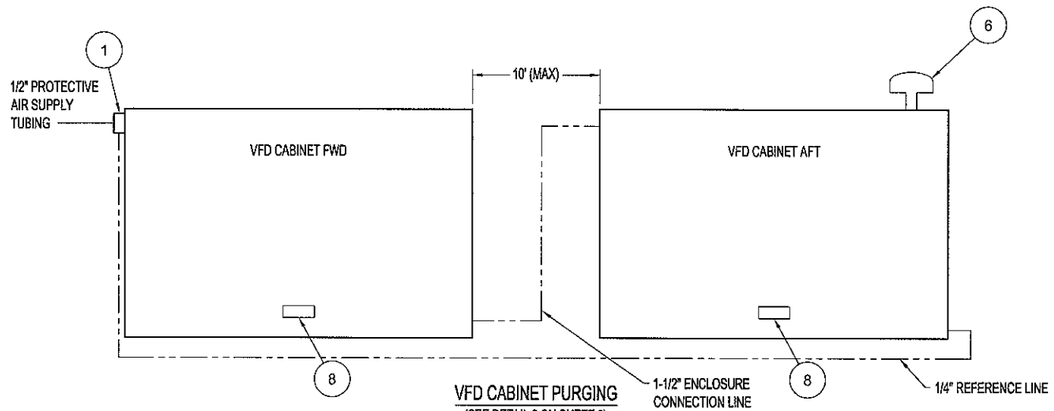

VFD CABINET PURGING
(SEE DETAIL 2 ON SHEET 2)

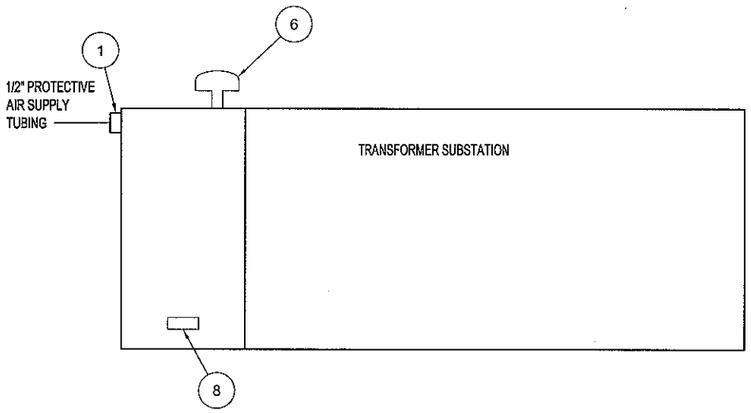

TRANSFORMER SUBSTATION PURGING
(SEE DETAIL 1 ON SHEET 2)

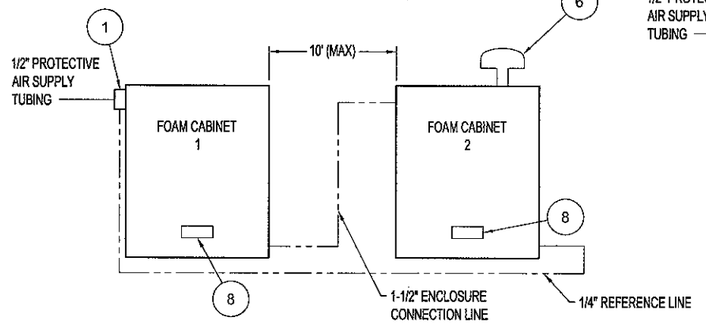

FOAM CABINETS PURGING
(SEE DETAIL 2 ON SHEET 2)

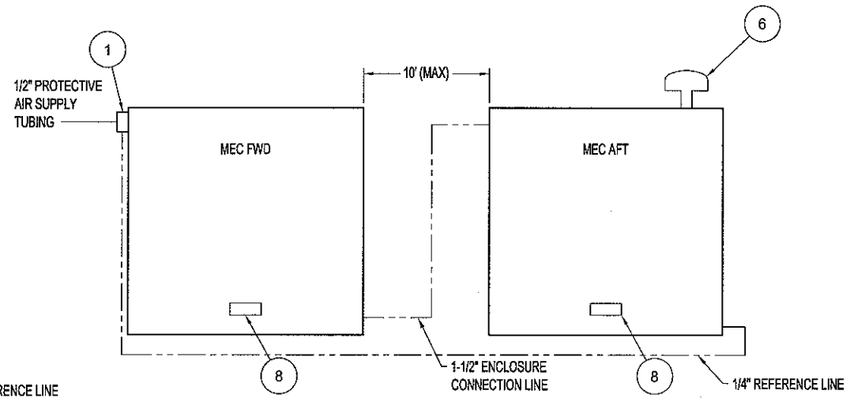

MAIN ELECTRICAL CABINETS PURGING
(SEE DETAIL 2 ON SHEET 2)

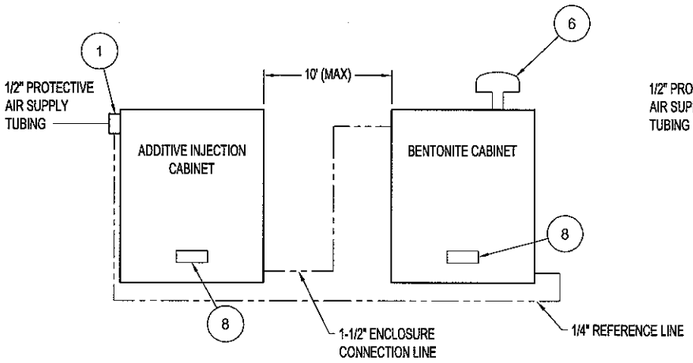

ADDITIVE / BENTONITE CABINETS PURGING
(SEE DETAIL 2 ON SHEET 2)

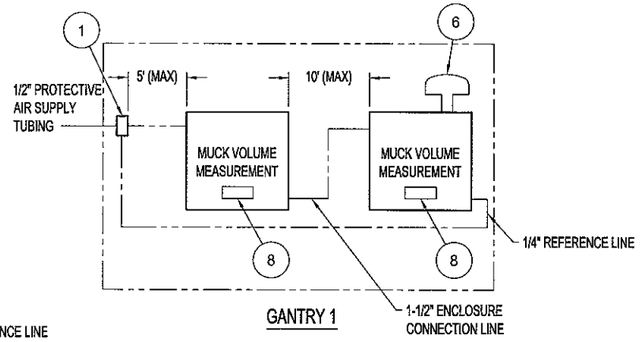

GANTRY 1

MUCK VOLUME MEASUREMENT PURGING
(SEE DETAIL 2 ON SHEET 2)

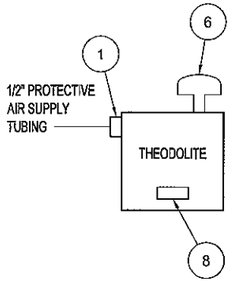

THEODOLITE PURGING
(SEE DETAIL1 ON SHEET 2)

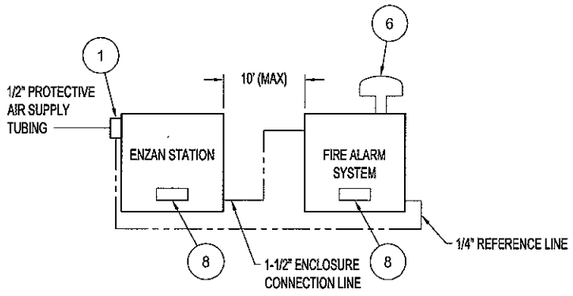

ENZAN STATION / FIRE ALARM SYSTEM PURGING
(SEE DETAIL 2 ON SHEET 2)

MACHINE	NEXT ASSY
EP20015-376377	1046350

UNLESS NOTED ALL DIMS ARE mm
TOLERANCES UNLESS NOTED
0-300 ± 1.5
300-1500 ± 3
1500-4000 ± 5
4000+ ± 10
THIRD ANGLE PROJECTION
DIMENSIONS ARE REFERENCE
ALL GEOMETRIC DIMENSIONING & TOLERANCING PER ANSI Y14.5-2009

PROPRIETARY NOTICE
The information disclosed on this drawing is the property of The Robbins Company or otherwise has been properly licensed to The Robbins Company. It is furnished in confidence and may not be copied, used or disclosed in whole or in part except as specifically permitted in writing by The Robbins Company. Any reproduction of this drawing in whole or in part must contain this notice in addition to any other boilerplate copyright notice. Any use of this drawing without specific written authorization from The Robbins Company shall be at the user's sole risk without liability to The Robbins Company.

REV	DESCRIPTION	REVD BY/ DATE	APP'D BY/ DATE

PURGE SYSTEM LAYOUT
SAN FRANCISCO

SIZE	DWG No.	REV	SHT	SCALE
D	1049751	0	1 of 2	1:5

DO NOT SCALE

DRAWN BY: P.BRENNAN
DATE: 7/5/2012
CHECKED TECHNICIAN: P.BRENNAN
CHECKED DESIGN: D.HOBBS
APPROVED BY: D.HOBBS
DATE: 7/5/2012
WEIGHT (TOTAL):

Robbins
www.TheRobbinsCompany.com

1049751

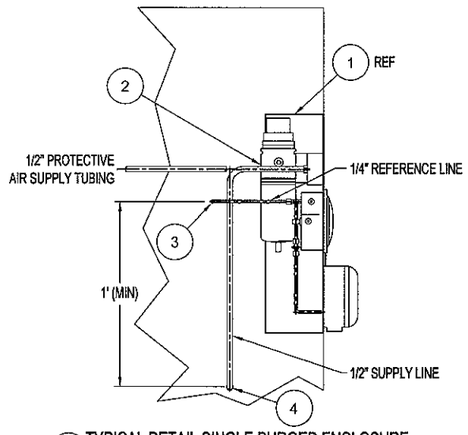

1 TYPICAL DETAIL SINGLE PURGED ENCLOSURE

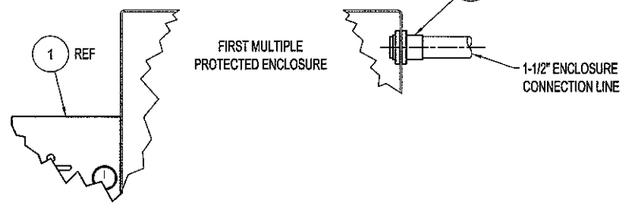

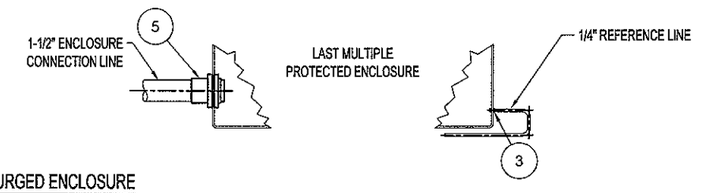

2 TYPICAL DETAIL MULTIPLE PURGED ENCLOSURE

PROPRIETARY NOTICE
The information disclosed herein is the property of The Robbins Company, and includes that only printing is and shall not be disclosed outside The Robbins Company, nor duplicated, used or disclosed in whole or in part without the prior written consent of The Robbins Company. Any such unauthorized use or disclosure will be prosecuted to the fullest extent of the law. Unless otherwise specified in a valid written agreement, this drawing is to be returned upon request to The Robbins Company.

MACHINE	NEXT ASSY
EPB2016-316/377	1046350

UNLESS NOTED ALL DIMS ARE mm

TOLERANCES UNLESS NOTED

DEC	X.XXX ± 1.5	X ± 1.5	
	XX.XX ± 0.5	XX ± 1.0	
	XXX.X ± 0.25	XXX ± .40	
FRACT	± 1/2	XX.XXX ± .100	
		ANGLE ± 1°	
		SURFACE 63	
		FINISH	

DIMENSIONS DO ARE REFERENCE
ALL GEOMETRIC DIMENSIONING & TOLERANCING PER ANSI Y14.5-2009

REV	DESCRIPTION	REVD BY / DATE	APP'D BY / DATE

PURGE SYSTEM LAYOUT
SAN FRANCISCO

SIZE	DWG no.	REV	SHT 2 of 2	SCALE
D	1049751	0		1:5

DO NOT SCALE

DRAWN BY P.BRENNAN DATE 7/9/2012
CHECKED/ENGINEER P.BRENNAN
WEIGHT TOTAL
APPROVED BY D.HOBBS DATE 7/9/2012

Robbins

www.TheRobbinsCompany.com

1049751

MODEL EPB2016-376/377
SECTION 16 • Water System Assembly

1. Water schematic
2. Water tank
3. De-watering tank

QTY	PART No.	DESCRIPTION	DWG No.	WT. Total	ITEM
2	A104402-1	BUTTERFLY VALVE, 2"	A104402		44
1	A105088-1	WATER FILTER	A105088		45
1	A94484-1	RELIEF VALVE	A94484		46
1	B44635-1B	LEVEL GAUGE ASSEMBLY	B44635		47
1	A49144-2	IMMERSION HEATER	A49144		48
1	2004472	LEVEL SWITCH ANALOG, 4-20mA	2004472		49
3	2001914	CONNECTOR/CABLE 10m, M12	2001914		50
1	A94481-1	BREATHER	A94481		51
1	5750005785	SOLENOID VALVE 1" NPT	5750005785		52
4	A101920-2	FLOW METER (2-19 LPM)	A101920		53

NOTES:

1. 590 LPM, <28°C, CUSTOMER IS RESPONSIBLE TO REGULATE PRESSURE FROM 2.6-10 bar (40-150 psi).
2. FLOW SENSOR (FS18-1) TO BE SET AT 90 LPM, DECREASING FLOW. LOW FLOW DISPLAYS ALARM MESSAGE AT OPERATORS CONSOL AND STOPS CUTTER MOTORS.
3. DCV (22-1) CLOSED WHEN M25 IS NOT OPERATING.
4. IF TEMPERATURE SWITCH (TS15-2, TS8-1 >45°C, DISPLAYS ALARM MESSAGE AT OPERATORS CONSOLE AND STOPS CUTTER MOTORS
5. MANUAL FILL OF COOLING RESERVOIR BY OPENING VALVES (GV38-3) & (GV38-4)
6. HIGH LEVEL (LS32-1) STARTS PUMP MOTOR M23 WHEN WATER SYSTEM IS ON. 100mm FROM TOP OF LVL STEM.
7. LOW LEVEL (LS32-1) STOPS PUMP MOTOR M23 WHEN WATER SYSTEM IS ON. 1050mm FROM TOP OF LVL STEM.
8. TEMPERATURE TRANSDUCER (TT15-1) DISPLAYS ALARM AT OPERATORS CONSOLE, WHEN TEMPERATURE REACHES 40°C.
9. FLOW SENSOR (FMS18-2) TO BE SET AT 75LPM DECREASING FLOW. LOW FLOW DISPLAYS ALARM MESSAGE AT OPERATORS CONSOLE.
10. LOW LEVEL (LS27-1) STOPS PUMP MOTORS M25 WHEN WATER SYSTEM IS ON. 1592mm FROM TOP OF LVL STEM.
11. LOW LEVEL (LS49-1) STOPS PUMP MOTOR M24 WHEN WATER SYSTEM IS ON, LOW LEVEL IS 638mm FROM TOP, HIGH LEVEL (LS49-1) DISPLAYS ALARM, HIGH LEVEL IS 85mm FROM TOP
12. FLOW SENSOR (FMS11-1 & 11-2) TO BE SET AT 40LPM DECREASING FLOW. LOW FLOW DISPLAYS ALARM MESSAGE AT OPERATORS CONSOLE.
13. SOLENOID VALVE (WSV52-1) TO BE ENERGIZED WHEN TEMP SWITCH (TS8-1) LOW SETTING IS BELOW 30°C.

QTY	PART No.	DESCRIPTION	DWG No.	WT. Total	ITEM
					1
1	2003901	M18 X 1.5 ADAPTER	2003901		2
1	2006003	WATER RESERVOIR, INCOMING 3000L	2006003		3
1	2001923	WATER, RESERVOIR, DEWATERING 3000L	2001923		4
1	2006807	WATER RESERVOIR, VFD COOLING	2006807		5
1	2005950	WATER PUMP	2005950		6
1	A105357-1	WATER PUMP	A105357		7
1	2003900	TEMPERATURE SENSOR	2003900		8
1	2006914	SUBMERSIBLE PUMP	2006914		9
4	2007093	SUBMERSIBLE PUMP	2006792		10
2	2006912	ANALOG FLOW METER	2006912		11
2	A105088-2	WATER FILTER 2-1/2"	A105088		12
6	5750012223	TEMPERATURE GAUGE	5750012223		13
2	2007095	FLOATLESS LIQUID LEVEL CONTROL	2006792		14
2	A470033-2	TEMPERATURE SENSOR	A470033		15
1	2003439	PRESSURE TRANSDUCER 0-10 bar	2003439		16
6	A101920-4	FLOW METER (8-76LPM)	A101920		17
2	2006913	ANALOG FLOW METER	2006913		18
2	A104402-5	BUTTERFLY VALVE, 4"-150 LB	A104402		19
8	A101920-3	FLOW METER (5-38 LPM)	A101920		20
1	B44635-2G	LEVEL GAUGE ASSEMBLY	B44635		21
1	2006909	BALL VALVE, 3" ELECTRIC ACTUATED	2006909		22
1	A105093-2	CHECK VALVE, 150 LB	A105093		23
2	2007094	STARTER BOX	2006792		24
8	A101443-4	HEADER MANIFOLD 90° DESIGN	A101443		25
1	2004223	FLOW METER, 10-100 GPM	2004223		26
1	2001928	LIQUID LEVEL TRANSMITTER	2001928		27
1	A102109-1	BREATHER ELEMENT	A102109		28
1	2006034	HEAT EXCHANGER	2006034		29
1	A92732-1	BREATHER ADAPTOR	A92732		30
4	A104402-2	BUTTERFLY VALVE 2-1/2"	A104402		31
1	2006855	LIQUID LEVEL TRANSMITTER	2006855		32
1	A104402-2	BUTTERFLY VALVE, 2-1/2" 150 LB.	A104402		33
1	2003346	FLOW METER, 100-1000 LPM	2003346		34
18	A105102-2	GATE VALVE, 3/4"	A105102		35
15	A105102-3	GATE VALVE, 1" NPT	A105102		36
3	A105102-5	GATE VALVE, 1-1/2" NPT	A105102		37
10	A105102-6	GATE VALVE, 2" NPT	A105102		38
5	A105043-6	PRESSURE GAUGE, 0-11 bar	A105043		39
5	5750500239	CHECK VALVE 3/4" NPT	5750500239		40
1	2006063	HEAT EXCHANGER	2006063		41
1	A105092-1	RELIEF VALVE, 2"	A105092		42
3	1046479	HOSE REEL ASSEMBLY	1046479		43

REFERENCE DRAWINGS	
COOLING WATER TANK ASSY.	2006819
DEWATERING TANK ASSY.	2006820
VFD RESERVOIR ASSY.	2006806

PROPRIETARY NOTICE
This information is the property of The Robbins Company and may not be copied or used by any other party without prior written consent of The Robbins Company. The Robbins Company expressly claims all common law and statutory rights in this work, without limitation in the event of publication. Any use of this information by any party is to be returned upon request to The Robbins Company.

REV	DESCRIPTION	REV'D BY / DATE	APP'D BY / DATE

TITLE: WATER SCHEMATIC

MACHINE	NEXT ASSY
EPB2016-376	
EPB2016-377	

UNLESS NOTED ALL DIMS ARE mm
TOLERANCES UNLESS NOTED
FRACTIONS ± 1/64 | DECIMALS X ± 1.5, X.X ± 1.0, X.XX ± .40, X.XXX ± .100 | ANGLES ± 1° | SURFACE 125
THIRD ANGLE PROJECTION
DIMENSIONS ON ARE REFERENCE
ALL GEOMETRIC DIMENSIONING & TOLERANCING PER ANSI Y14.5-2009

SIZE: D | DWG NO: 1046290 | REV: 0 | SHT 1 OF 3 | SCALE: 1:1 | DO NOT SCALE

DRAWN BY: C.SNIDER | DATE: 3/12/12
CHECKED BY/FROM: D.DONLEY | CHECKED BY/DATE: D.DONLEY
WEIGHT TOTAL: N/A
APPROVED BY: J.HEINEMAN | DATE: 3/12/12

Robbins

www.TheRobbinsCompany.com

1046290

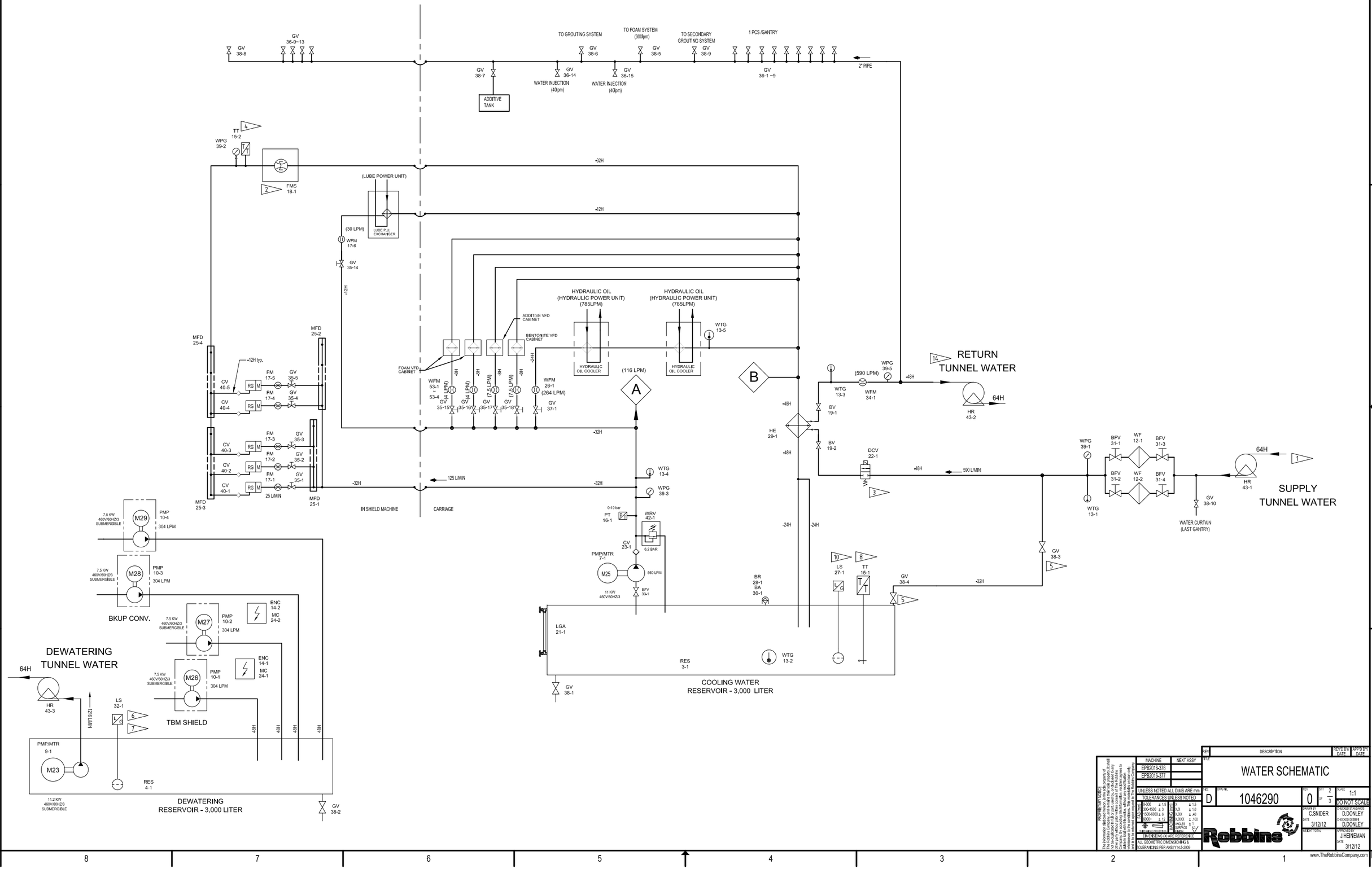

PROPRIETARY NOTICE
This drawing and the information disclosed herein are the property of The Robbins Company and remain their sole property. It shall not be copied or used in whole or in part for any purpose without the prior written consent of The Robbins Company. Any such consent shall not confer any right to disclose to others or to manufacture or have manufactured from the information contained herein any apparatus or any part thereof unless such right is granted by separate written agreement with The Robbins Company.

MACHINE	NEXT ASSY
EPB2016-376	
EPB2016-377	

UNLESS NOTED ALL DIMS ARE mm
TOLERANCES UNLESS NOTED

0-300	± 1.5	X	± 1.5
300-1500	± 3	X.X	± 1.0
1500-6000	± 6	X.XX	± .40
6000+	± 12	X.XXX	± .100
		ANGLES	± 1°
		SURFACE	63

MACHINING

DIMENSIONS IN ARE REFERENCE
ALL GEOMETRIC DIMENSIONING & TOLERANCING PER ANSI Y14.5-2009

REV	DESCRIPTION	REV'D BY/ DATE	APP'D BY/ DATE

WATER SCHEMATIC

SIZE	DWG NO.	REV	SHT 2 OF 3	SCALE
D	1046290	0		1:1

DO NOT SCALE

DRAWN BY	C.SNIDER	CHECKED STANDARDS D.DONLEY
DATE	3/12/12	CHECKED DESIGN D.DONLEY
RELEASED TO CAD		APPROVED BY J.HEINEMAN
		DATE 3/12/12

Robbins

www.TheRobbinsCompany.com

1046290

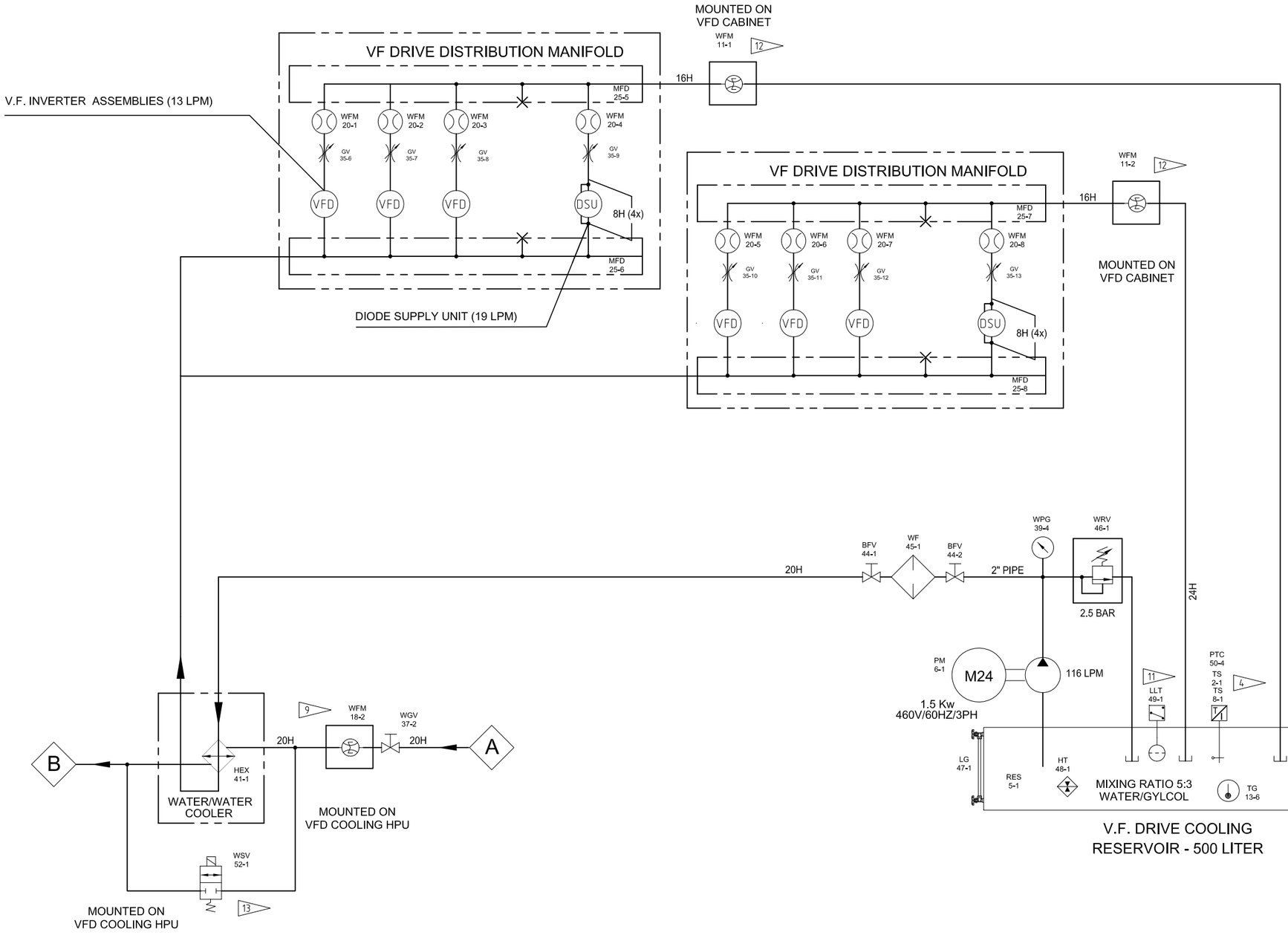

REV	DESCRIPTION	REV'D BY / DATE	APP'D BY / DATE		
	WATER SCHEMATIC				
SIZE D	DWG NO. 1046290	REV 0	SHT 3 OF 3	SCALE 1:1 DO NOT SCALE	
MACHINE: EPB2016-376, EPB2016-377	NEXT ASSY	DRAWN BY C.SNIDER	CHECKED BY (HEINEMAN) D.DONLEY		
UNLESS NOTED ALL DIMS ARE mm		DATE 3/12/12	CHECKED BY (DEMAG) D.DONLEY		
TOLERANCES UNLESS NOTED: 0-300 ± 1.5; 300-1500 ± 3; 1500-6000 ± 6; 6000+ ± 12	MACHINING in mm: X ± 1.5, X.X ± 1.0, X.XX ± .40, X.XXX ± .100, ANGLES ± 1°, SURFACE 125	WEIGHT TOTAL	APPROVED BY J.HEINEMAN DATE 3/12/12		
DIMENSIONS OR ARE REFERENCE					
ALL GEOMETRIC DIMENSIONING & TOLERANCING PER ANSI Y14.5-2009					

PROPRIETARY NOTICE: This information is the property of The Robbins Company, and remains their sole property & shall not be used, disclosed to others or reproduced without the express written consent of The Robbins Company, and remains their sole property & shall not be used, disclosed to others or reproduced without the express written consent of The Robbins Company. Any such use, disclosure or reproduction shall be limited in accordance to the terms to which it was obtained. Unpublished rights reserved under the copyright laws of the United States. Upon loan to recipient agrees to return upon request to The Robbins Company.

www.TheRobbinsCompany.com

1046290

NOTES:
1. KEEP ALL PORTS PLUGGED UNTIL FINAL ASSEMBLY.
2. USE PIPE SEALANT ON ALL NPT CONNECTIONS.
3. TORQUE ALL FASTENERS TO ROBBINS DRAWING 5750 9900 17.
4. BEFORE PUMP ROTATION BLEED AIR OUT OF BLEED PLUGS.
5. TANK VOLUME: 4200 LITERS, USABLE VOLUME: 3850 LITERS.

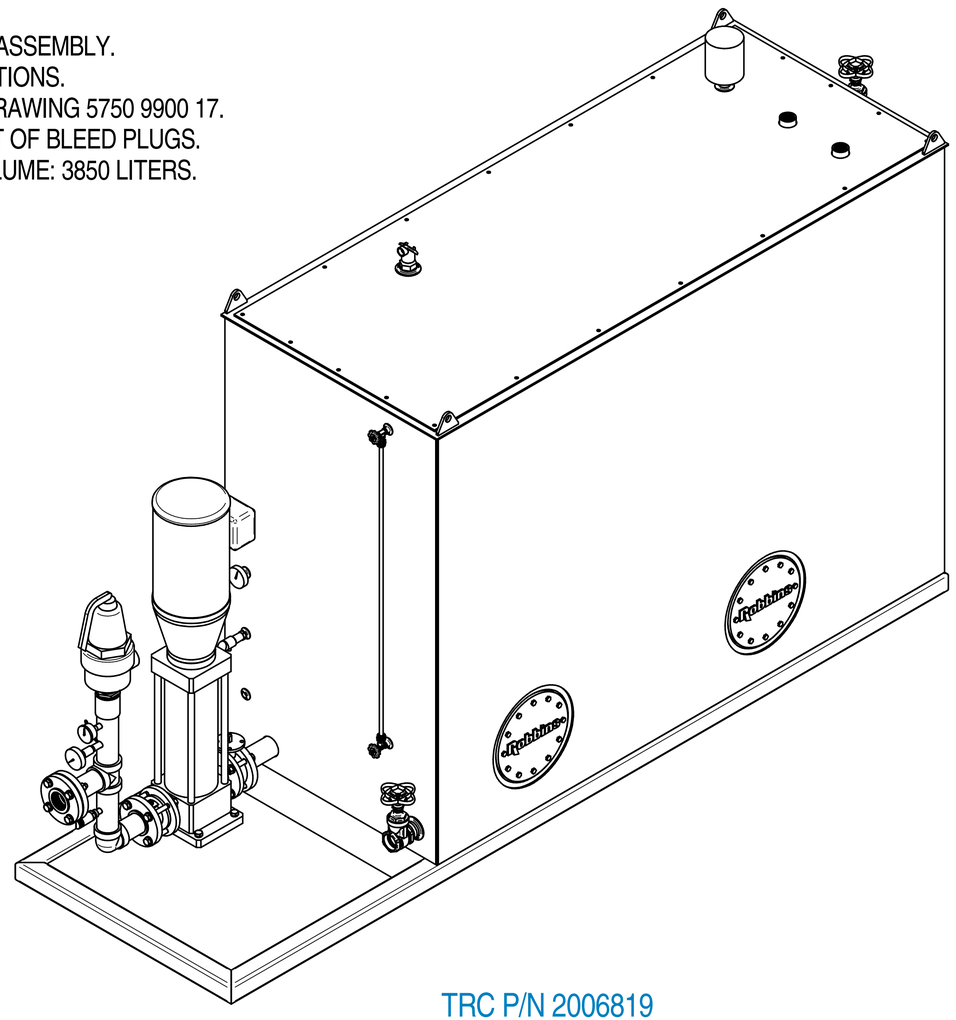

TRC P/N 2006819
WATER TANK ASSEMBLY
1:10

QTY	PART No.	DESCRIPTION	DWG No.	WT. Total	ITEM
1	2006007	FRAME ASSEMBLY	2006007	142.0 kg	1
1	2006003	WATER TANK	2006003	917.8 kg	2
1	2006008	PIPE HEADER WELDMENT	2006008	19.8 kg	3
1	A105357-1	WATER PUMP	A105357	230.0 kg	4
1	A105092-1	PRESSURE RELIEF VALVE, 2" NPT	A105092	37.3 kg	5
1	B44635-2G	LEVEL GAUGE ASSEMBLY	B44635	0.8 kg	6
2	A105102-6	GATE VALVE, 2" NPT	A105102	8.0 kg	7
2	5750012223	THERMOMETER, MODEL-A, 3"	5750012223	1.1 kg	8
1	2001928	LIQUID LEVEL TRANSMITTER	2001928	3.8 kg	9
1	A105043-6	PRESSURE GAUGE, 0-160 PSI	A105043	0.7 kg	10
1	A470033-2	TEMPERATURE SENSOR	A470033	0.3 kg	11
1	A105093-2	CHECK VALVE, 2-1/2"	A105093	3.3 kg	12
1	2003439	PRESSURE TRANSDUCER	2003439	0.3 kg	13
1	A104402-2	BUTTERFLY VALVE, 2.5"	A104402	3.6 kg	14
1	A92732-1	BREATHER ADAPTOR	A92732	0.2 kg	15
1	A102109-1	BREATHER ELEMENT	A102109	1.1 kg	16
1	A105157-4	MERCHANT COUPLING, 1/2"	A105157	0.1 kg	17
3	A108561-9	CLOSE NIPPLE, 2" NPT	A108561	0.7 kg	18
24	A22158-5	WASHER, HD NW OD M16	A22158	0.4 kg	19
12	A22154-55	NUT, M16 G8	A22154	0.4 kg	20
4	A22151-51305	HHCS, M16x130mm C8.8	A22151	1.0 kg	21
4	A22151-51105	HHCS, M16x110mm C8.8	A22151	0.8 kg	22
4	A22151-50805	HHCS, M16x80mm C8.8	A22151	0.7 kg	23
1	2001879	FLANGE THREADED 2 1/2" 150 LB	2001879	3.5 kg	24
1	661-112	GSKT, RNG FLG Ø2-1/2"x1/16" C150		0.0 kg	25
1	A105157-10	MERCHANT COUPLING, 2.5"	A105157	1.0 kg	26
1	A108564-8	HEX REDUCER, 2.5" X 2"	A108564	0.4 kg	27
8	A22158-4	WASHER, HD NW OD M12	A22158	0.1 kg	28
4	A22154-45	NUT, M12 G8	A22154	0.1 kg	29
4	A22151-50605	HHCS, M16x60mm C8.8	A22151	0.5 kg	30

PROPRIETARY NOTICE
This information disclosed herein, is the sole property of The Robbins Company and is considered confidential. It shall not be duplicated in full or part, used by, or disclosed to any other party without the written consent of The Robbins Company. By accepting this information, recipient agrees to defend, indemnify, and hold harmless The Robbins Company for whatsoever to the conditions. This material is on loan only, and shall be returned upon request.

MACHINE	NEXT ASSY
EPB2016-376	
EPB2016-377	

UNLESS NOTED ALL DIMS ARE mm
TOLERANCES UNLESS NOTED

0-300	±1.5	X	±1.5
300-1500	±3	X.X	±1.0
1500-6000	±6	X.XX	±.40
6000+	±12	X.XXX	±.100
		ANGLES	±1°
		SURFACE FINISH	√

THIRD ANGLE PROJECTION
DIMENSIONS IN() ARE REF
ALL GEOMETRIC DIMENSIONING & TOLERANCING PER ANSI Y14.5-2009

REV	DESCRIPTION	REV'D BY/ DATE	APP'D BY/ DATE

TITLE: WATER TANK ASSEMBLY

SIZE	DWG No.	REV.	SHT	SCALE
D	2006819	0	1 OF 2	SEE DETAIL

DO NOT SCALE

DRAWN BY: C.SNIDER
DATE: 2/16/12
CHECKED STANDARDS: A.GLASS
CHECKED DESIGN: A.GLASS
WEIGHT TOTAL: 1379.8 kg
APPROVED BY: D.DONLEY
DATE: 2/16/12

Robbins

www.TheRobbinsCompany.com

2006819

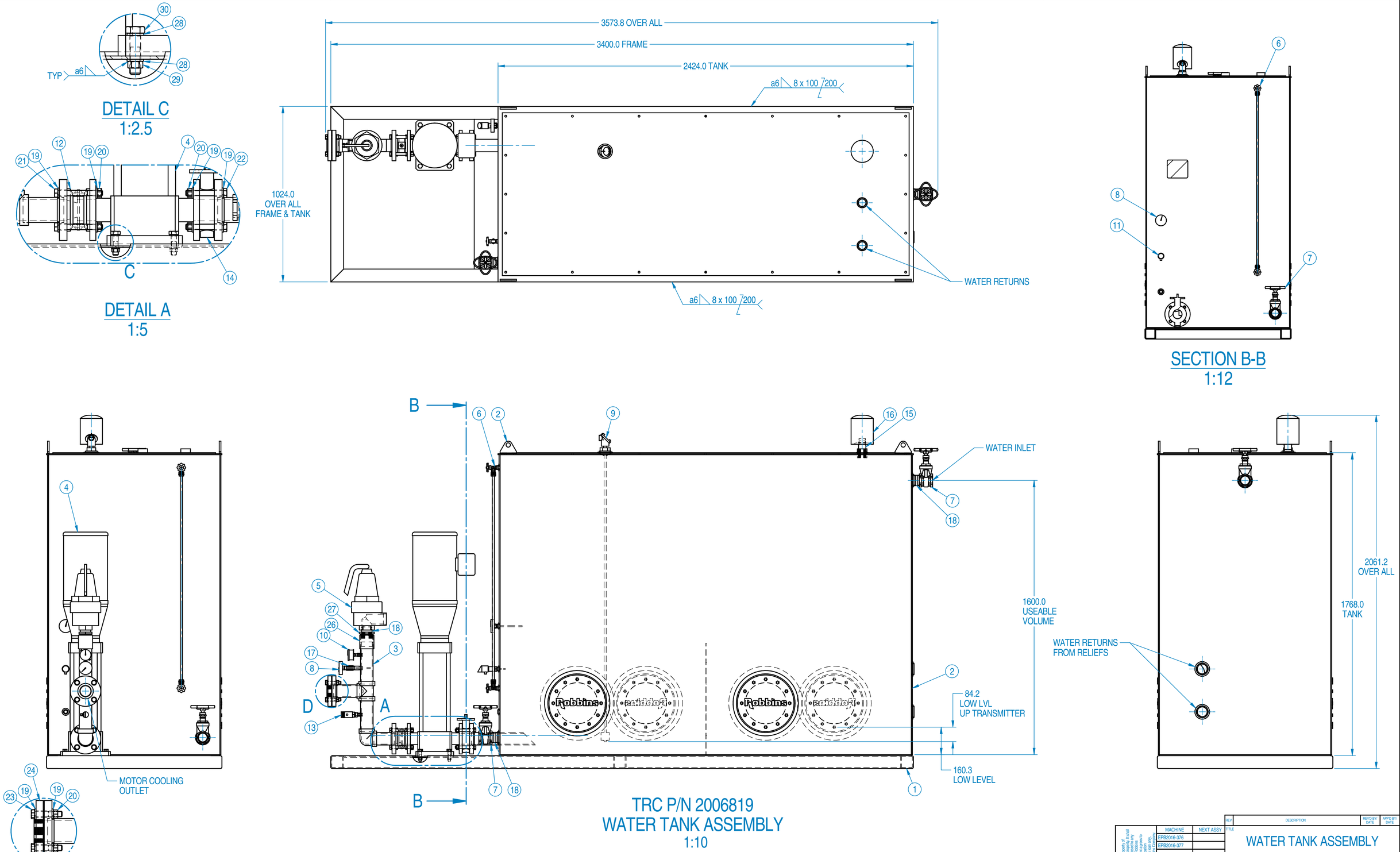

TRC P/N 2006819
WATER TANK ASSEMBLY
1:10

2006819

MACHINE	NEXT ASSY
EPB2016-376	
EPB2016-377	

UNLESS NOTED ALL DIMS ARE mm

TOLERANCES UNLESS NOTED

0-300	±1.5	X	±1.5
300-1500	±3	X.X	±1.0
1500-6000	±6	X.XX	±.40
6000+	±12	X.XXX	±.100
		ANGLES	±1°
		SURFACE FINISH	3.2

THIRD ANGLE PROJECTION

DIMENSIONS (X) ARE REF

ALL GEOMETRIC DIMENSIONING & TOLERANCING PER ANSI Y14.5-2009

PROPRIETARY NOTICE

The information disclosed herein is the sole property of The Robbins Company, and remains the sole property it shall not be duplicated in full or part, used by or disclosed to any other party without prior written consent of The Robbins Company. By accepting this information, recipient agrees to abide by the terms of this notice, without any modification whatsoever to the conditions. This material is on loan only, and is to be returned upon request. The Robbins Company.

REV	DESCRIPTION	REV'D BY/ DATE	APP'D BY/ DATE

TITLE: WATER TANK ASSEMBLY

SIZE	DWG No.	REV	SHT	SCALE
D	2006819	0	2 OF 2	SEE DETAIL

DO NOT SCALE

DRAWN BY	CHECKED STANDARDS
C.SNIDER	A.GLASS
DATE 2/16/12	CHECKED DESIGN A.GLASS
WEIGHT TOTAL 1379.8 kg	APPROVED BY D.DONLEY DATE 2/16/12

Robbins

www.TheRobbinsCompany.com

QTY	PART No.	DESCRIPTION	DWG No.	WT. Total	ITEM
1	2001922	FRAME ASSEMBLY	2001922	95.5 kg	1
1	2001923	DEWATERING TANK	2001923	664.5 kg	2
1	2006855	LIQUID LEVEL TRANSMITTER	2006855	3.1 kg	3
1	A105102-6	GATE VALVE, 2" NPT	A105102	4.0 kg	4
1	A108561-9	CLOSE NIPPLE, 2" NPT	A108561	0.2 kg	5
1	2006914	SUBMERSIBLE PUMP	2006914	717.4 kg	6

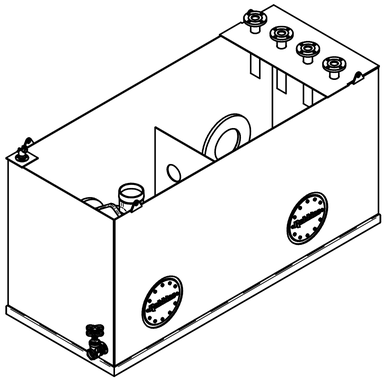

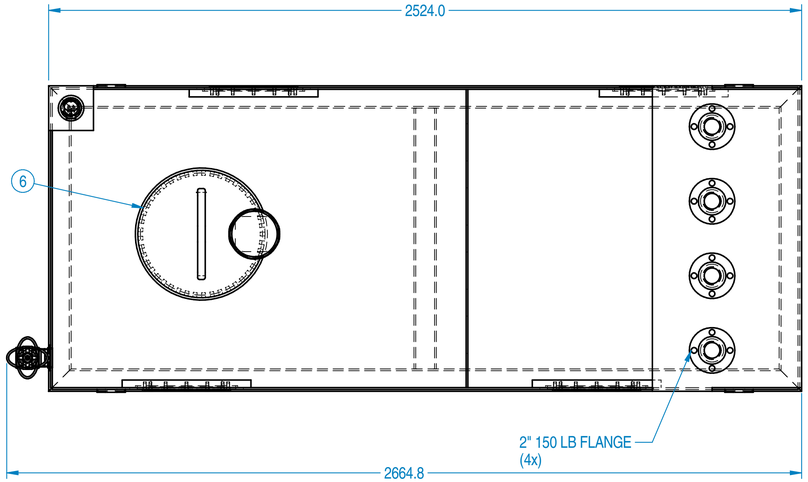

NOTES:
1. KEEP ALL PORTS PLUGGED UNTIL FINAL ASSEMBLY.

2. USE PIPE SEALANT ON ALL NPT CONNECTIONS.

3. TORQUE ALL FASTENERS TO ROBBINS DRAWING 5750 9900 17.

4. RESERVOIR TO BE OIL TIGHT. SEAL WELD FLANGE INNER BORE TO TANK SKIN. TYPICAL ALL FLANGES.

5. COAT OUTSIDE SURFACE WITH PRIMER. MASK FACES OF ALL BOLT RINGS & PROTECT ALL THREADS FROM PAINT.

6. REMOVE ALL BURRS AND BREAK ALL SHARP EDGES.

7. WELDING REQUIREMENTS MUST MEET THE LATEST VERSION OF THE LATEST AWS CODE.

8. STEEL STAMP OR ELECTRO-ETCH PART NUMBER, P.O. NUMBER, AND VENDOR I.D. CODE NUMBER WITH 0.25 MINUMUM CHARACTERS.

9. BEFORE PUMP ROTATION BLEED AIR OUT OF BLEED PLUG.

10. TANK VOLUME: 3000 LITERS

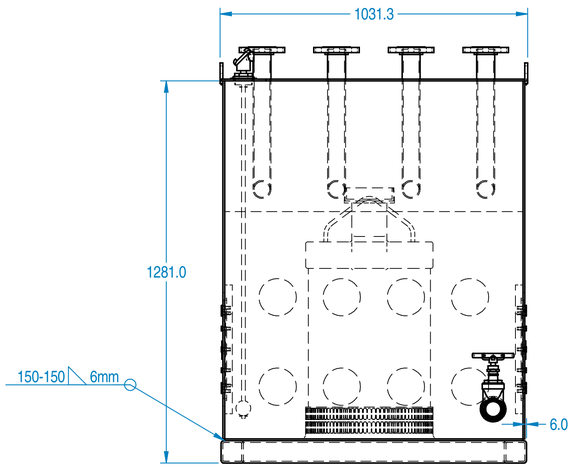

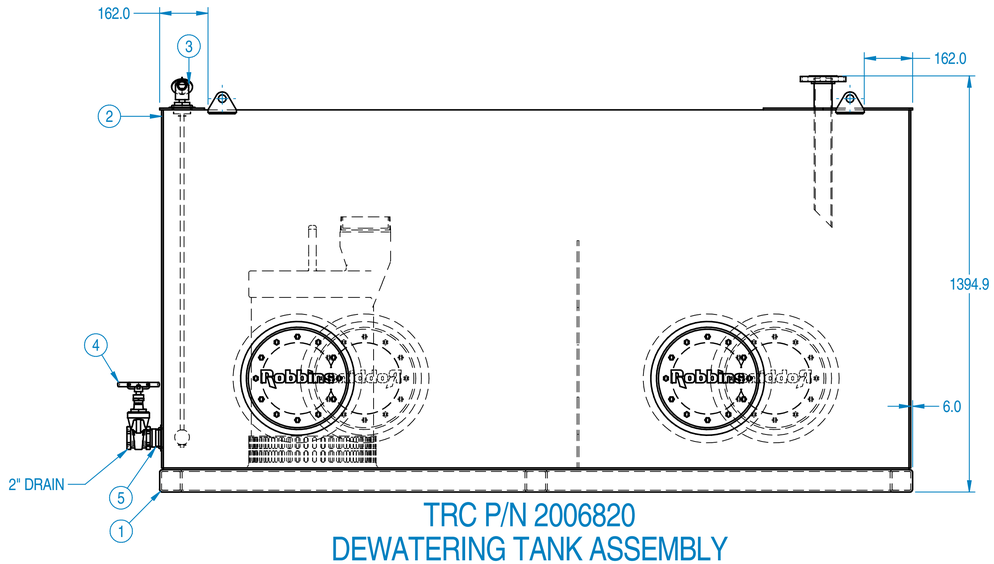

TRC P/N 2006820
DEWATERING TANK ASSEMBLY
1:10

2006820

REV	DESCRIPTION	REV'D BY DATE	APP'D BY DATE

TITLE: DEWATERING TANK ASSEMBLY

MACHINE	NEXT ASSY
EPB2016-376	
EPB2016-377	

UNLESS NOTED ALL DIMS ARE mm
TOLERANCES UNLESS NOTED
0-300 ±1.5 | X ±1.5
300-1500 ±3 | X.X ±1.0
1500-6000 ±6 | X.XX ±.40
6000+ ±12 | X.XXX ±.100
ANGLES ±1°
SURFACE 3.2
FINISH
THIRD ANGLE PROJECTION
DIMENSIONS (X) ARE REF
ALL GEOMETRIC DIMENSIONING & TOLERANCING PER ANSI Y14.5-2009

SIZE: D | DWG No.: 2006820 | REV: 0 | SHT 1 OF 1 | SCALE: SEE DETAIL | DO NOT SCALE

DRAWN BY: D.DONLEY | DATE: 3/12/12 | CHECKED STANDARDS: D.DONLEY | CHECKED DESIGN: D.DONLEY

WEIGHT TOTAL: 1485.1 kg | APPROVED BY: J.HENEIMAN | DATE: 3/12/12

Robbins

www.TheRobbinsCompany.com

PROPRIETARY NOTICE
The information disclosed herein is the sole property of The Robbins Company, and remains the sole property of it and not be duplicated in full or part, used by or disclosed to any other party without prior written consent of The Robbins Company. By accepting this information, recipient agrees to abide in the terms of the above, without any modification whatsoever to the conditions. This material is on loan only, and is to be returned upon request to The Robbins Company.

MODEL EPB2016-376/377
SECTION 17 • Air System Assembly

1. Air schematic
2. Air compressor specification drawing’
3. Air receiver

QTY	PART No.	DESCRIPTION	DWG No.	WT. Total	ITEM
-					1
4	A79867-8	BALL VALVE 2"	A79867		2
1	5750005186	AIR FILTER W/ AUTO DRAIN 2" NPT	5750005186		3
1	1048320	AIR COMPRESSOR 75kW	1048320		4
1	2001967	AIR RECIEVER 1500 LITER	2001967		5
1	A110118-1	POP-SAFETY RELIEF VALVE, 1" NPT	A110118		6
1	A79867-5	BALL VALVE 1"	A79867		7
1	A94774-1	CHECK VALVE 2"	A94774		8
1	5750005185	AIR LUBRICATOR 2" NPT	5750005185		9
1	A94775-1	AIR REGULATOR 2" NPT	A94775		10
2	A105043-6	PRESSURE GAUGE 0- 160 psi	A105043		11
1	2003439	PRESSURE TRANSDUCER 0-10 bar	2003439		12
15	A105102-3	GATE VALVE 1"	A105102		13
1	A105502-7	HEADER MANIFOLD	A105502		14
1	1047352	MEMBRANE DRYER	1047352		15
1	A13374-1	AIR REGULATOR	A13374		16
2	A79867-11	BALL VALVE, 4" NPT	A79867		17

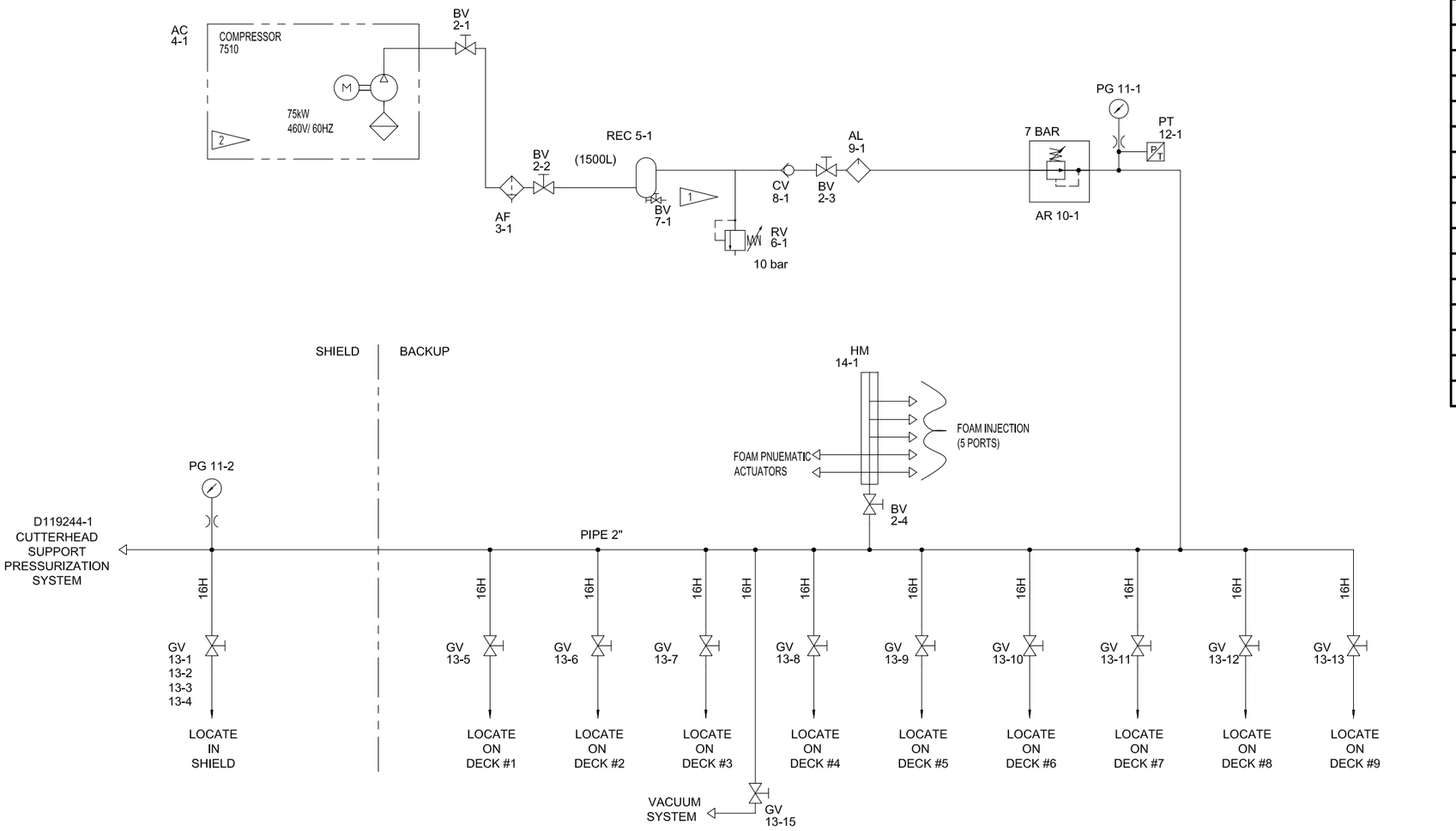

PROPRIETARY NOTICE:
This information disclosed is the property of The Robbins Company, and remains their sole property. It shall not be copied, used or disclosed to anyone outside the receiving party without prior written consent of The Robbins Company. All rights are reserved under the laws governing the use of copyrighted material. Modification of any dimension or data in detail with this notice, without any modification, is not to be construed as a change to the detail. Any such modification is to be returned upon request to The Robbins Company.

MACHINE: EPB2016-376, EPB2016-377
NEXT ASSY:
UNLESS NOTED ALL DIMS ARE mm
TOLERANCES UNLESS NOTED
FRACTIONAL ± 1/64
MACHINING marks ± 1/32
DIMENSIONS ARE REFERENCE
ALL GEOMETRIC DIMENSIONING & TOLERANCING PER ANSI Y14.5-2009

REV	DESCRIPTION	REV'D BY / DATE	APP'D BY / DATE

TITLE: AIR SCHEMATIC

SIZE	DWG NO.	REV	SHT	SCALE
D	1048286	0	1 of 1	1:1 DO NOT SCALE

DRAWN BY: D.DONLEY, DATE: 5/2/12
CHECKED 1st/2nd: C.SNIDER / D.DONLEY
WEIGHT TOTAL:
APPROVED BY: J.HEINEMAN, DATE: 5/8/12

Robbins
www.TheRobbinsCompany.com

1048286

DESCRIPTION

AIR COMPRESSOR

DIMENSIONS

78.7"L x 43.3"W x 68.9"H

TECHNICAL DATA

SULLAIR: 7510 S-ENERGY SERIES
AIR COOLED ROTARY SCREW AIR PACKAGE
397 ACFM @ 150 PSIG
ELECTRIC MOTOR: 460V/3/60 ODP EPACT (TEFC MOTOR W/ CLASS 1 DIV 2)
MOTOR: 75kW (100HP)
PURGE SYSTEM FOR STARTER BOX
MEETS CLASS 1 DIV. 2 REQUIREMENTS

MANUFACTURER

SULLAIR CORPORATION
3700 EAST MICHIGAN BLVD
MICHIGAN CITY, IN 46360

1048320

PROPRIETARY NOTICE
The information disclosed hereon, is the sole property of The Robbins Company, and remains their sole property. It shall not be duplicated in full or part, used by, or disclosed to any other party without prior written consent of The Robbins Company. By accepting this information, recipient agrees to abide by the applicable restrictions, including, without limitation, those set forth in the preceding notice. This information is not to be used in any manufacturing whatsoever to the conditions. This material is on loan only, and is to be returned upon request to The Robbins Company.

MACHINE	NEXT ASSY
EPB2016-376	
EPB2016-377	

UNLESS NOTED ALL DIMS ARE mm

TOLERANCES UNLESS NOTED

FAB (mm)		MACHINING (mm)	
0-300	±1.5	X	±1.5
300-1500	±3	X.X	±1.0
1500-6000	±6	X.XX	±.40
6000+	±12	X.XXX	±.100
		ANGLES	±1
		SURFACE FINISH	6.3

THIRD ANGLE PROJECTION

DIMENSIONS (X) ARE REFERENCE

ALL GEOMETRIC DIMENSIONING & TOLERANCING PER ANSI Y14.5-2009

REV	DESCRIPTION	REV'D BY/ DATE	APP'D BY/ DATE

TITLE: AIR COMPRESSOR

SIZE	DWG No.	REV	SHT	SCALE
A	1048320	0	1 OF 1	1:1

DO NOT SCALE

DRAWN BY	CHECKED STANDARDS
D.DONLEY	C.SNIDER
DATE: 5/3/12	CHECKED DESIGN: D.DONLEY
WEIGHT TOTAL: 1428 KG	APPROVED BY: J.HEINEMAN
	DATE: 5/3/12

Robbins

DESCRIPTION
AIR RECIEVER

TECHNICAL DATA
ABBOTT: 52/11
MATERIAL: STEEL
PRESSURE RATING: 160 psi (11 bar)
CAPACITY: 1500 LITERS
INLET & OUTLET: 65NB FLANGE

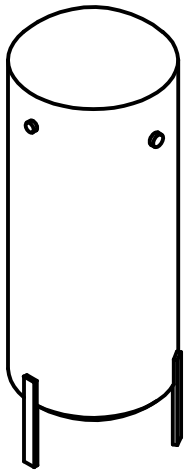

1:40

MANUFACTURER
ABBOTT & Co. Ltd.
NEWARK BOILER WORKS
NORTHERN RD, NEWARK
(44) 0 1636 704208

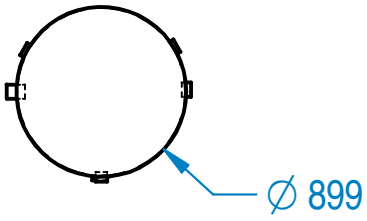

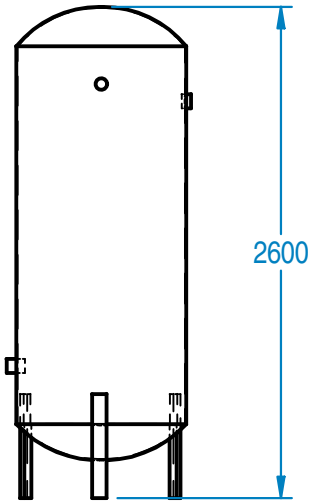

1:40

2001967

BY/ DATE | DESCRIPTION | REV

PROPRIETARY NOTICE
The information disclosed hereon, is the sole property of The Robbins Company, and remains their sole property. It shall not be duplicated in full or part, used by, or disclosed to any other party without prior written consent of The Robbins Company. By accepting this information, recipient agrees to abide in total with this notice, without any modification whatsoever to the conditions. This material is on loan only, and is to be returned upon request to The Robbins Company.

MACHINE	NEXT ASSY
STD PART	

UNLESS NOTED, DIMS ARE mm

TOLERANCES UNLESS NOTED

FAB (mm)		MACHINING (mm)	
0-300	±1.5	X	±1.5
300-1500	±3	X.X	±1.0
1500-6000	±6	X.XX	±.40
6000+	±12	X.XXX	±.100
		ANGLES	±1°
		SURFACE FINISH	3.2

ALL GEOMETRIC DIMENSIONING AND TOLERANCING PER ANSI Y14.5M-1982 AS APPLICABLE.

TITLE: AIR RECIEVER, 1500 LITERS

SIZE	DWG No.	REV	SHT	SCALE:
A	2001967	0	OF 1/1	SEE DETAIL - DO NOT SCALE

Robbins

DRAWN	CHECKED
DDONLEY	DD
DATE 8/24/2009	DATE 8/24/2009

DIMS (X) ARE REF

WEIGHT TOTAL: 519.9 kg

MODEL EPB2016-376/377
SECTION 18 • Ground Conditioning Equipment

1. Foam schematic
2. Grout schematic
3. Additive schematic
4. Bentonite schematic

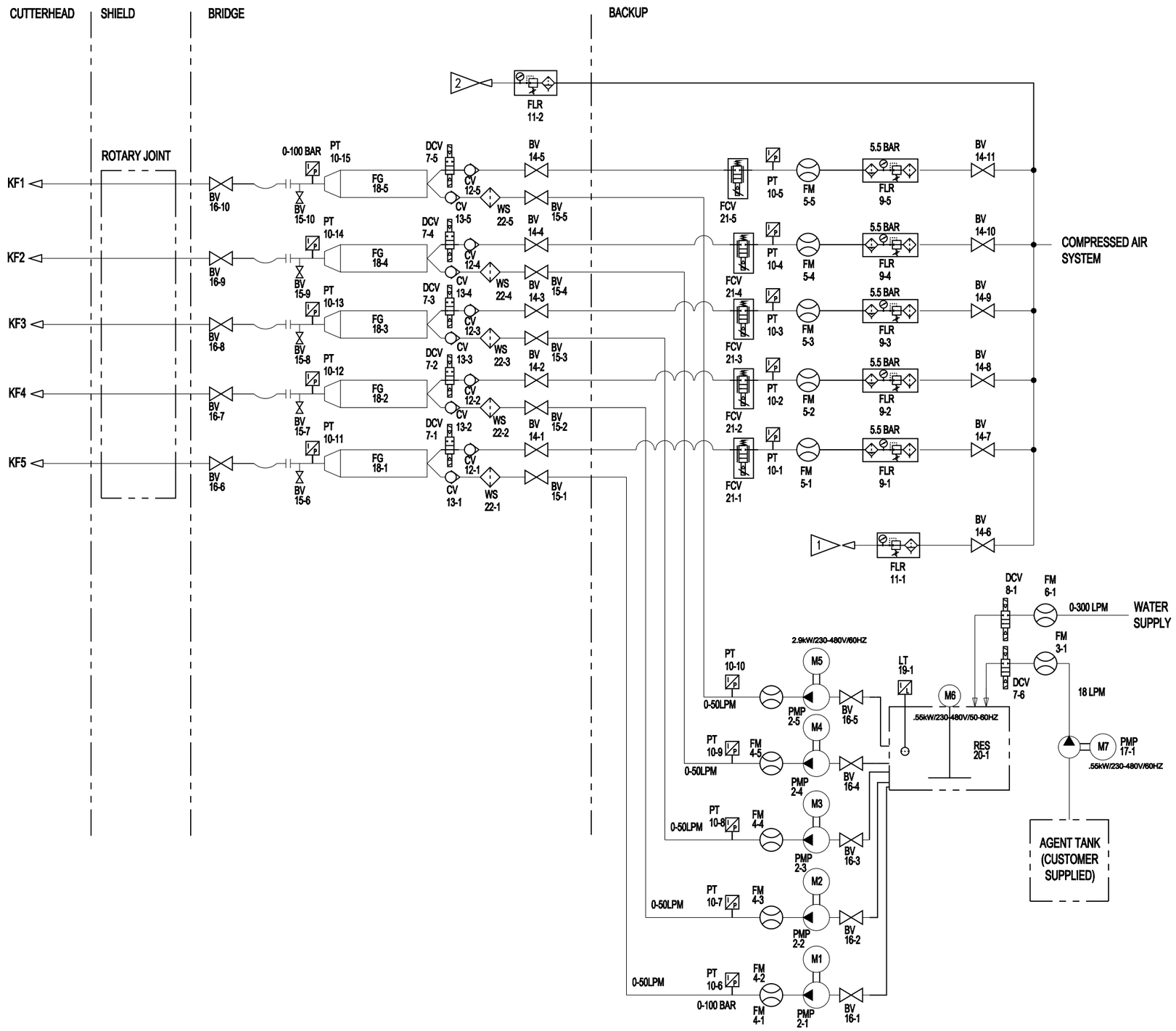

QTY	PART No.	DESCRIPTION	DWG No.	WT. Total	ITEM
					1
5	2007026	TUBE PUMP	2007026		2
1	2006950	FLOW METER, 0-25LPM	2006950		3
5	2006952	FLOW METER, 0-50L/M	2006952		4
5	2006960	PNEUMATIC FLOW METER	2006960		5
1	2007090	FLOW METER, ANALOG OUT, 8-90GPM	2007090		6
6	2006961	BALL VALVE, ACTUATED, 3/4"	2006961		7
1	2007088	BALL VALVE, ACTUATED, 2" NPT	2007088		8
5	2006974	FILTER / REGULATOR / LUBRICATOR	2006974		9
15	2003344	PRESSURE TRANSDUCER	2003344		10
2	A95616-1	FILTER REGULATOR & LUBRICATOR	A95616		11
5	5750500239	CHECK VALVE - WATER/AIR 3/4"	5750500239		12
5	A102123-6	SWING CHECK, 1" NPT	A102123		13
11	A76299-4	BALL VALVE, 3/4" NPT	A76299		14
10	A79867-5	BALL VALVE, 1" NPT	A79867		15
10	A79867-8	BALL VALVE, 2" NPT	A79867		16
1	2007052	TRANSFER PUMP	2007052		17
5	2006993	FOAM GENERATOR	2006993		18
1	2004474	LEVEL SWITCH, ANALOG 4-20MA	2004474		19
1	2007077	FOAM SOLUTION TANK	2007077		20
5	2007044	FLOW CONTROL VALVE	2007044		21
5	A78225-1	WATER STRAINER	A78225		22

NOTES:

1. FLR 11-1 IS TO PROVIDE 6.2 BAR TO FCV 21-1 ~ 21-5 & DCV 8-1 & DCV 7-6
2. FLR 11-2 IS TO PROVIDE 6.2 BAR TO DCV 7-1 ~ 7-5

PROPRIETARY NOTICE
The information disclosed hereon is the sole property of The Robbins Company and may not be used, reproduced or disclosed to others except as specifically authorized in writing by The Robbins Company. By accepting this information, recipient agrees to obtain no rights in the information except as specifically authorized in writing by The Robbins Company. This media is to be used only, and the information disclosed hereon is to be maintained, in confidence, for the purpose for which it was received.

MACHINE	NEXT ASSY
EPB2016-376	
EPB2016-377	

UNLESS NOTED ALL DIMS ARE: mm

TOLERANCES UNLESS NOTED

0-300	± 0.5	.X	± 1.0
300-1500	± 3	.XX	± 1.0
1500-6000	± 6	.XXX	± .40
6000+	± 12	.XXXX	± .100
		ANGLES	± 1
		SURFACE FINISH	125

DIMENSIONS (X) ARE REFERENCE.

ALL GEOMETRIC DIMENSIONING & TOLERANCING PER ANSI Y14.5-2009

REV | DESCRIPTION | REV'D BY/ DATE | APP'D BY/ DATE

TITLE: FOAM INJECTION SCHEMATIC

SIZE	DWG No.	REV	SHT	SCALE
D	1046776	0	1 of 1	1:1

DO NOT SCALE

DRAWN BY: D.BUCKINGHAM DATE: 4/18/12
CHECKED ENGINEER: D.DONLEY
CHECKED DESIGN: D.DONLEY
APPROVED BY: J.HEHNEMAN DATE: 4/18/12
WEIGHT TOTAL:

Robbins

www.TheRobbinsCompany.com

1046776

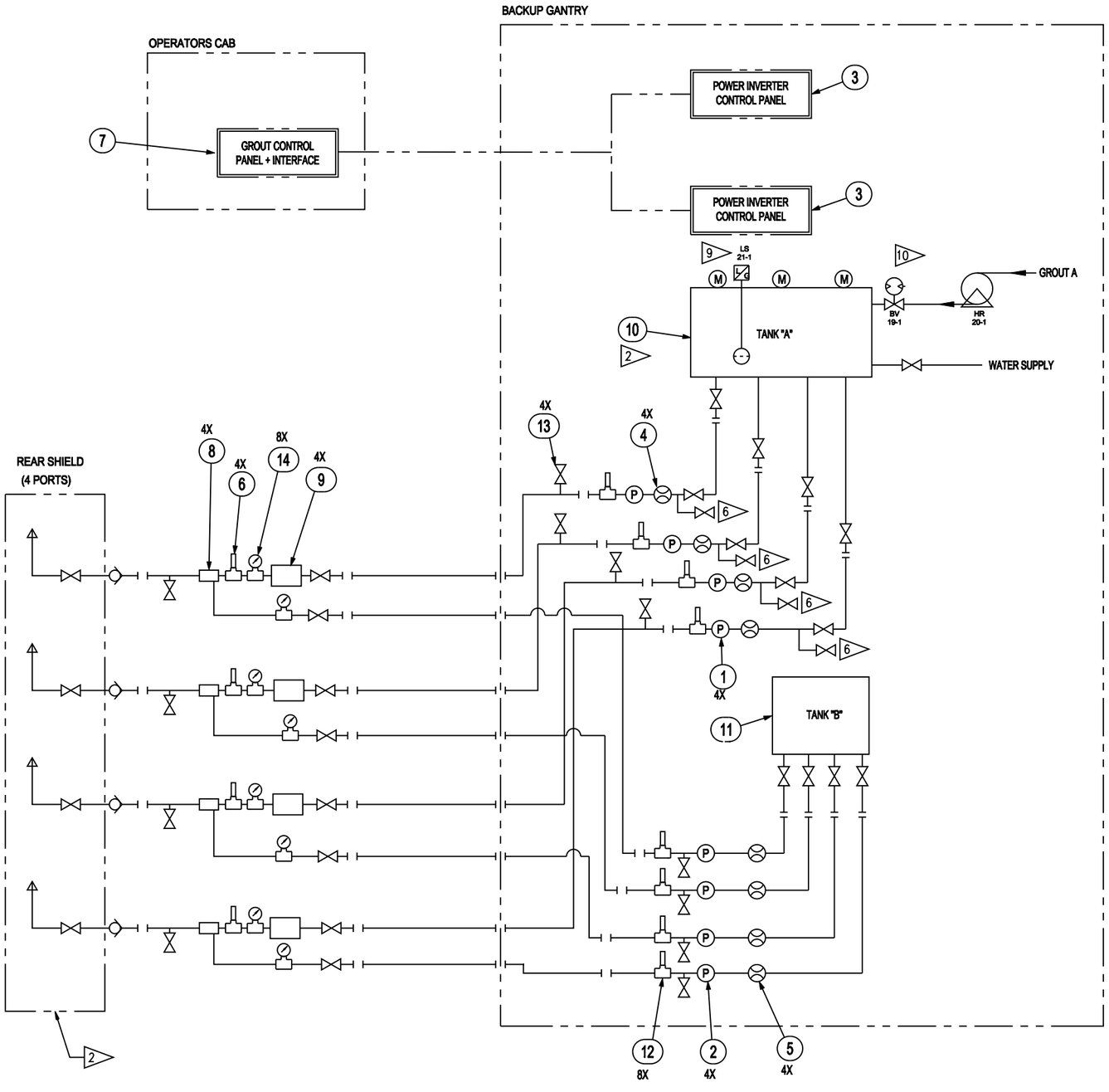

QTY	PART No.	DESCRIPTION	DWG No.	WT. Total	ITEM
-	-1	PUMP UNIT,LIQUID A, 100 L/min 1.6 MPa		1	1
-	-2	PUMP UNIT, LIQUID B, 10 L/min 1.6 MPa		1	2
-	-3	PUMP INVERTER CONTROL PANEL		1	3
-	-4	FLOW METER, LIQUID 'A'		1	4
-	-5	FLOW METER, LIQUID 'B'		1	5
-	-6	PRESSURE SENSOR, 1 MPa, 4-20 mA		1	6
-	-7	CONTROL PANEL + INTERFACE		1	7
-	-8	MIXING NOZZLE		1	8
-	-9	CLEANER RECOVERY UNIT		1	9
1	2006923	TANK, GROUT LIQUID 'A' ASSY, 5.0 m^3	2006923	2	10
-	-	TANK, GROUT LIQUID 'B' (CUSTOMER)			11
-	-12	PRESSURE SWITCH, 3.0 MPa		1	12
-	-13	CLEANER INLET UNIT		1	13
-	-14	PRESSURE GAUGE, 1.0 MPa		1	14
-	-15	LIQUID-A PUMP INNER TUBE		1	15
-	-16	LIQUID-B PUMP INNER TUBE		1	16
-	-17	2B CLEANER (NORMAL)		7	17
-	-18	2B CLEANER (WIRE TYPE)		7	18
1	2007088	ACTUATED BALL VALVE, 2" NPT	2007088		19
1	1048367	HOSE REEL ASSEMBLY, DN50	1048367		20
1	1048378	ULTRASONIC SENSOR	1048378		21

NOTES:

1. THESE ARE INCLUDED IN SCOPE OF 1046810 BY TEAM MIXING. LISTED FOR SPARE PARTS.
2. TRC SUPPLIED PARTS
3. ELECTRICAL SUPPLY: 460V/3/60 Hz
4. SIGNAL EXCHANGE TO INTERFACE WITH ENZAN DATA LOGGING SYSTEM.
5. APPROVAL DRAWING REQUIRED.
6. CONNECT TO WATER SUPPLY.
7. CLEANER AVAILABLE FROM TEAM MIXING.
8. COMPONENTS MUST CONFORM TO CLASS I DIV II REQUIREMENTS.
9. HI LIMIT 200 mm FROM TOP
   LOW LIMIT 1100mm FROM TOP
10. HI AND LOW LIMIT CONTROLS FILLING OF TANK WITH BV19-1.
11. GROUT INJECTION SYSTEM SUPPLIER: TEAM MIXING

XXXXXXX

MACHINE	NEXT ASSY
EPB2016-376	
EPB2016-377	

UNLESS NOTED ALL DIMS ARE mm
TOLERANCES UNLESS NOTED

0-300	± 1.5
300-1500	± 3
1500-6000	± 6
6000+	± 12

X	± 1.5
X.X	± 1.0
X.XX	± .40
X.XXX	± .100
ANGLES	± 1
SURFACE FINISH	6.3

DIMENSIONS (X) ARE REFERENCE
ALL GEOMETRIC DIMENSIONING & TOLERANCING PER ANSI Y14.5-2009

REV	DESCRIPTION	REV'D BY/ DATE	APP'D BY/ DATE

TITLE: GROUT SYSTEM ASSEMBLY A+B SPECIFICATIONS

SIZE: D | DWG No. 1046810 | REV 0 | SHT 1 OF 2 | SCALE 1:1 DO NOT SCALE

DRAWN BY: V.ARDITO | DATE: 3/16/12 | CHECKED STANDARDS: D.DONLEY | CHECKED DESIGN: D.DONLEY | WEIGHT TOTAL: TBD | APPROVED BY: J.HEINEMAN | DATE: 5/7/12

Robbins

www.TheRobbinsCompany.com

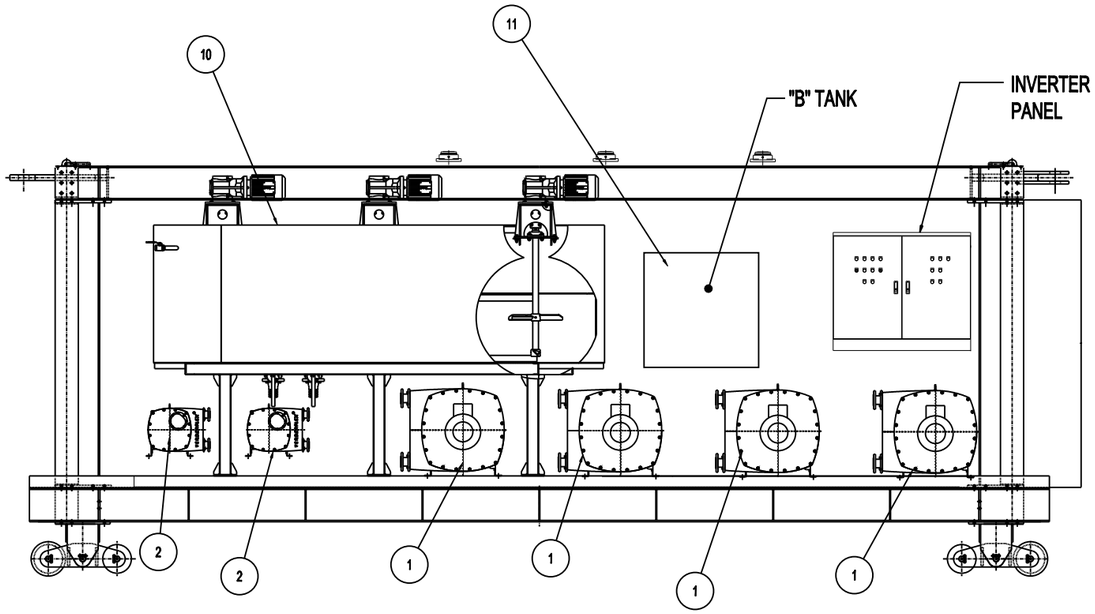

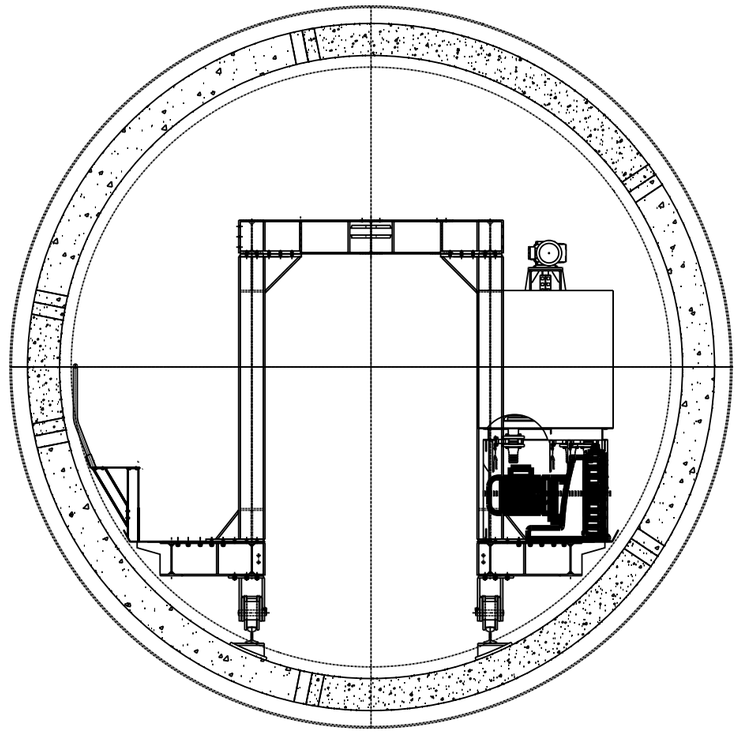

1046810

REV	DESCRIPTION	REV'D BY / DATE	APP'D BY / DATE

TITLE: GROUT SYSTEM ASSEMBLY A+B SPECIFICATIONS

SIZE	DWG No.	REV	SHT	SCALE
D	1046810	0	2 OF 2	1:25.4

DO NOT SCALE

DRAWN BY: V.ARDITO — DATE: 3/16/12
CHECKED STANDARDS: D.DONLEY — CHECKED DESIGN: D.DONLEY
WEIGHT TOTAL:
APPROVED BY: J.HEINEMAN — DATE: 5/7/12

Robbins

www.TheRobbinsCompany.com

MACHINE	NEXT ASSY
EPB2016-376	
EPB2016-377	

UNLESS NOTED ALL DIMS ARE mm

TOLERANCES UNLESS NOTED

FAB [mm]	MACH. WELD [mm]
0-300 ± 1.5	X ± 1.5
300-1500 ± 3	X.X ± 1.0
1500-6000 ± 6	X.XX ± .40
6000+ ± 12	X.XXX ± .160
	ANGLES ± 1
	SURFACE FINISH 6.3

TWO-ANGLE PROJECTION

DIMENSIONS [X] ARE REFERENCE

ALL GEOMETRIC DIMENSIONING & TOLERANCING PER ANSI Y14.5-2009

PROPRIETARY NOTICE
This information disclosed herein, is the sole property of The Robbins Company, and shall not be reproduced in full or part, used by, or disclosed to any other party without prior written consent of The Robbins Company. By accepting this information, recipient agrees to abide in total with the notice, without any modification or alteration of the contents. This material is not to be used, copied, or used to be reserved upon request to The Robbins Company.

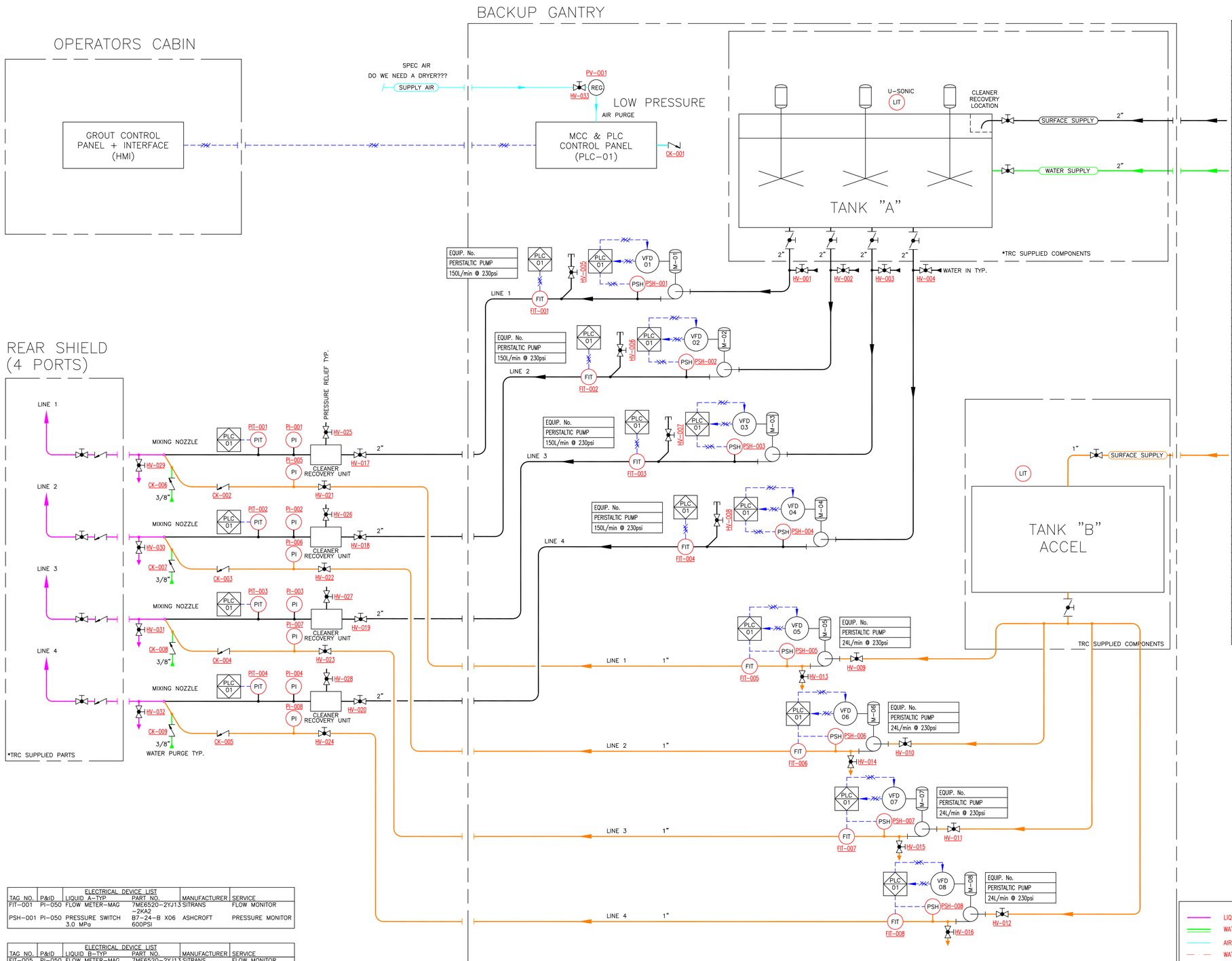

Client: The Robbins Company
Project: Rear Shield Backfill Grouting System
Project No. 1337

Revision C
Date: Feb 07/11
Rev: Jun 15/12

INSTRUMENT INDEX

TAG NO.	P&ID	LOC	DESCRIPTION	SERVICE	VLV LINE SZ	I/C	DATA SHEET NO.	SOURCE
CK-001	PI-050		Check Valve	MCC & PLC Cabinet Air Purge	1/4"		Team	Team
CK-002	PI-050		Check Valve	Check Valve to Mixing Nozzle - Line 1	1"		Team	Team
CK-003	PI-050		Check Valve	Check Valve to Mixing Nozzle - Line 2	1"		Team	Team
CK-004	PI-050		Check Valve	Check Valve to Mixing Nozzle - Line 3	1"		Team	Team
CK-005	PI-050		Check Valve	Check Valve to Mixing Nozzle - Line 4	1"		Team	Team
CK-006	PI-050		Check Valve	Mixing Nozzle Water Purge - Line 1	3/8"		Team	Team
CK-007	PI-050		Check Valve	Mixing Nozzle Water Purge - Line 2	3/8"		Team	Team
CK-008	PI-050		Check Valve	Mixing Nozzle Water Purge - Line 3	3/8"		Team	Team
CK-009	PI-050		Check Valve	Mixing Nozzle Water Purge - Line 4	3/8"		Team	Team
FIT-001	PI-050		Mag Flow Meter	Liquid A - Flow Monitoring - Line 1	2"		Team	Team
FIT-002	PI-050		Mag Flow Meter	Liquid A - Flow Monitoring - Line 2	2"		Team	Team
FIT-003	PI-050		Mag Flow Meter	Liquid A - Flow Monitoring - Line 3	2"		Team	Team
FIT-004	PI-050		Mag Flow Meter	Liquid A - Flow Monitoring - Line 4	2"		Team	Team
FIT-005	PI-050		Mag Flow Meter	Liquid B - Flow Monitoring - Line 1	1"		Team	Team
FIT-006	PI-050		Mag Flow Meter	Liquid B - Flow Monitoring - Line 2	1"		Team	Team
FIT-007	PI-050		Mag Flow Meter	Liquid B - Flow Monitoring - Line 3	1"		Team	Team
FIT-008	PI-050		Mag Flow Meter	Liquid B - Flow Monitoring - Line 4	1"		Team	Team
HV-001	PI-050		Ball Valve - Full Port - Manual	Liquid A - Purge Feed - Line 1	2"		Team	Team
HV-002	PI-050		Ball Valve - Full Port - Manual	Liquid A - Purge Feed - Line 2	2"		Team	Team
HV-003	PI-050		Ball Valve - Full Port - Manual	Liquid A - Purge Feed - Line 3	2"		Team	Team
HV-004	PI-050		Ball Valve - Full Port - Manual	Liquid A - Purge Feed - Line 4	2"		Team	Team
HV-005	PI-050		Ball Valve - Full Port - Manual	Liquid A - Pig Launching Valve - Line 1	2"		Team	Team
HV-006	PI-050		Ball Valve - Full Port - Manual	Liquid A - Pig Launching Valve - Line 2	2"		Team	Team
HV-007	PI-050		Ball Valve - Full Port - Manual	Liquid A - Pig Launching Valve - Line 3	2"		Team	Team
HV-008	PI-050		Ball Valve - Full Port - Manual	Liquid A - Pig Launching Valve - Line 4	2"		Team	Team
HV-009	PI-050		Ball Valve - Full Port - Manual	Liquid B - Pump Feed - Line 1	1"		Team	Team
HV-010	PI-050		Ball Valve - Full Port - Manual	Liquid B - Pump Feed - Line 2	1"		Team	Team
HV-011	PI-050		Ball Valve - Full Port - Manual	Liquid B - Pump Feed - Line 3	1"		Team	Team
HV-012	PI-050		Ball Valve - Full Port - Manual	Liquid B - Pump Feed - Line 4	1"		Team	Team
HV-013	PI-050		Ball Valve - Full Port - Manual	Liquid B - Drain - Line 1	1"		Team	Team
HV-014	PI-050		Ball Valve - Full Port - Manual	Liquid B - Drain - Line 2	1"		Team	Team
HV-015	PI-050		Ball Valve - Full Port - Manual	Liquid B - Drain - Line 3	1"		Team	Team
HV-016	PI-050		Ball Valve - Full Port - Manual	Liquid B - Drain - Line 4	1"		Team	Team
HV-017	PI-050		Ball Valve - Full Port - Manual	Liquid A - Mixing Feed - Line 1	2"		Team	Team
HV-018	PI-050		Ball Valve - Full Port - Manual	Liquid A - Mixing Feed - Line 2	2"		Team	Team
HV-019	PI-050		Ball Valve - Full Port - Manual	Liquid A - Mixing Feed - Line 3	2"		Team	Team
HV-020	PI-050		Ball Valve - Full Port - Manual	Liquid A - Mixing Feed - Line 4	2"		Team	Team
HV-021	PI-050		Ball Valve - Full Port - Manual	Liquid B - Mixing Feed - Line 1	1"		Team	Team
HV-022	PI-050		Ball Valve - Full Port - Manual	Liquid B - Mixing Feed - Line 2	1"		Team	Team
HV-023	PI-050		Ball Valve - Full Port - Manual	Liquid B - Mixing Feed - Line 3	1"		Team	Team
HV-024	PI-050		Ball Valve - Full Port - Manual	Liquid B - Mixing Feed - Line 4	1"		Team	Team
HV-025	PI-050		Ball Valve - Manual	Recovery Unit Pressure Relief - Line 1	1/2"		Team	Team
HV-026	PI-050		Ball Valve - Manual	Recovery Unit Pressure Relief - Line 2	1/2"		Team	Team
HV-027	PI-050		Ball Valve - Manual	Recovery Unit Pressure Relief - Line 3	1/2"		Team	Team
HV-028	PI-050		Ball Valve - Manual	Recovery Unit Pressure Relief - Line 4	1/2"		Team	Team
HV-029	PI-050		Ball Valve - Full Port - Manual	Purge Drain - Line 1	/		Team	Team
HV-030	PI-050		Ball Valve - Full Port - Manual	Purge Drain - Line 2	/		Team	Team
HV-031	PI-050		Ball Valve - Full Port - Manual	Purge Drain - Line 3	/		Team	Team
HV-032	PI-050		Ball Valve - Full Port - Manual	Purge Drain - Line 4	/		Team	Team
HV-033	PI-050		Manual Block & Bleed Valve	Cabinet Purge	3/4"		Team	Team
PI-001	PI-050		Pressure Gauge	Liquid A - Pressure Gauge, 0-300 psi - Line 1	2"		Team	Team
PI-002	PI-050		Pressure Gauge	Liquid A - Pressure Gauge, 0-300 psi - Line 2	2"		Team	Team
PI-003	PI-050		Pressure Gauge	Liquid A - Pressure Gauge, 0-300 psi - Line 3	2"		Team	Team
PI-004	PI-050		Pressure Gauge	Liquid A - Pressure Gauge, 0-300 psi - Line 4	2"		Team	Team
PI-005	PI-050		Pressure Gauge	Liquid B - Pressure Gauge, 0-300 psi - Line 1	1"		Team	Team
PI-006	PI-050		Pressure Gauge	Liquid B - Pressure Gauge, 0-300 psi - Line 2	1"		Team	Team
PI-007	PI-050		Pressure Gauge	Liquid B - Pressure Gauge, 0-300 psi - Line 3	1"		Team	Team
PI-008	PI-050		Pressure Gauge	Liquid B - Pressure Gauge, 0-300 psi - Line 4	1"		Team	Team
PIT-001	PI-050		Pressure Transmitter	Liquid A - Pressure Sensor, 0-300 psi, 4-20 mA - Line 1	2"		Team	Team
PIT-002	PI-050		Pressure Transmitter	Liquid A - Pressure Sensor, 0-300 psi, 4-20 mA - Line 2	2"		Team	Team
PIT-003	PI-050		Pressure Transmitter	Liquid A - Pressure Sensor, 0-300 psi, 4-20 mA - Line 3	2"		Team	Team
PIT-004	PI-050		Pressure Transmitter	Liquid A - Pressure Sensor, 0-300 psi, 4-20 mA - Line 4	2"		Team	Team
PSH-001	PI-050		Pressure Switch High	Liquid A - Pressure Switch, 0-350 psi - Line 1	2"		Team	Team
PSH-002	PI-050		Pressure Switch High	Liquid A - Pressure Switch, 0-350 psi - Line 2	2"		Team	Team
PSH-003	PI-050		Pressure Switch High	Liquid A - Pressure Switch, 0-350 psi - Line 3	2"		Team	Team
PSH-004	PI-050		Pressure Switch High	Liquid A - Pressure Switch, 0-350 psi - Line 4	2"		Team	Team
PSH-005	PI-050		Pressure Switch High	Liquid B - Pressure Switch, 0-350 psi - Line 1	1"		Team	Team
PSH-006	PI-050		Pressure Switch High	Liquid B - Pressure Switch, 0-350 psi - Line 2	1"		Team	Team
PSH-007	PI-050		Pressure Swtich High	Liquid B - Pressure Switch, 0-350 psi - Line 3	1"		Team	Team
PSH-008	PI-050		Pressure Switch High	Liquid B - Pressure Switch, 0-350 psi - Line 4	1"		Team	Team
PSL-001	PI-050		Pressure Switch Low	MCC & PLC Cabinet Air Purge	1/4"		Team	Team
PV-001	PI-050		Pressure Regulator	Cabinet Purge Regulator	3/4"		Team	Team

ELECTRICAL DEVICE LIST

TAG NO.	P&ID	LIQUID A-TYP	PART NO.	MANUFACTURER	SERVICE
FIT-001	PI-050	FLOW METER-MAG	7ME6520-2YJ13-2KA2	SITRANS	FLOW MONITOR
PSH-001	PI-050	PRESSURE SWITCH 3.0 MPa	B7-24-B X06 600PSI	ASHCROFT	PRESSURE MONITOR

ELECTRICAL DEVICE LIST

TAG NO.	P&ID	LIQUID B-TYP	PART NO.	MANUFACTURER	SERVICE
FIT-005	PI-050	FLOW METER-MAG	7ME6520-2YJ13-2KA2	SITRANS	FLOW MONITOR
PSH-005	PI-050	PRESSURE SWITCH 3.0 MPa	B7-24-B X06 600PSI	ASHCROFT	PRESSURE MONITOR

ELECTRICAL DEVICE LIST

TAG NO.	P&ID	LIQUID MIX-TYP	PART NO.	MANUFACTURER	SERVICE
PIT-001	PI-050	PRESSURE TRANSMITTER	7MF4133-1EA70-1NC6-Z B21+M40	SITRANS	PRESSURE MONITOR

FLOW LEGEND

LIQUID-MIXED	LIQUID-A
WATER	LIQUID-B
AIR	ELECTRICAL
WATER/ANTIFREEZE	BY OTHERS

BUTTERFLY VALVE, MANUAL
3-WAY HAND
WATER FILTER
AIR COMPRESSOR
VENTURI TUBE
MAG-FLOW METER
BUZZER/BEACON
STROBE
BALL VALVE
MATERIAL FLOW
2-WAY SOL. VALVE
4-WAY SOL. VALVE -DOUBLE ACTUATOR
4-WAY SOL. VALVE
BUTTERFLY VALVE, ACTUATED
PINCH VALVE c/w QUICK EXHAUST
PUMP
CHECK VALVE
RELIEF VALVE
GLOBE VALVE
LOAD CELL TRANSMITTER
AIR FILTER
LEVEL INDICATOR
PRESSURE SWITCH HIGH
LOAD CELL
PRESSURE INDICATOR
LOW AIR PRES. SWITCH
LEVEL TRANSMITTER
LIMIT SWITCH/ PLUG CHUTE SW.
PROXIMITY SWITCH
PRESSURE TRANSMITTER
MOTOR STARTER
VARIABLE FREQUENCY DRIVE
LEVEL SWITCH
COMPUTER
PLC
DISTRIBUTED I/O MODULE
REMOTE I/O MODULE

THIS DRAWING IS THE PROPERTY OF TEAM MIXING TECHNOLOGIES INC. AND MAY NOT BE REPRODUCED OR USED FOR ANY PURPOSE WITHOUT THE EXPRESS WRITTEN PERMISSION OF TEAM MIXING TECHNOLOGIES INC.

REV	DATE	REMARKS	BY	CHK
C	6/15/12	POST MEETING REVISIONS	EFB	–
B	5/29/12	POST MEETING REVISIONS	BF	EFB
A	2/7/12	PRELIMINARY REVISIONS	EFB	–

Team Mixing Technologies Inc.
Unit 1A–30528 Great Northern Avenue
Abbotsford BC V2T 6H4 Canada
Ph +1 604 556 7225 Fax +1 604 556 7215
E–mail: info@teammixing.com Web: www.teammixing.com

CLIENT: THE ROBBINS COMPANY
PROJECT: REAR SHIELD BACKFILL GROUTING SYSTEM
AREA: –
TITLE: PROCESS & INSTRUMENTATION DRAWING

DRAWN: EFB	DATE: FEB 7/12	SCALE: (U.N.O.)	W.O. No.	DRAWING No.	REV
CHECK: –	DATE: –	NTS	1337B	1337B–050	C

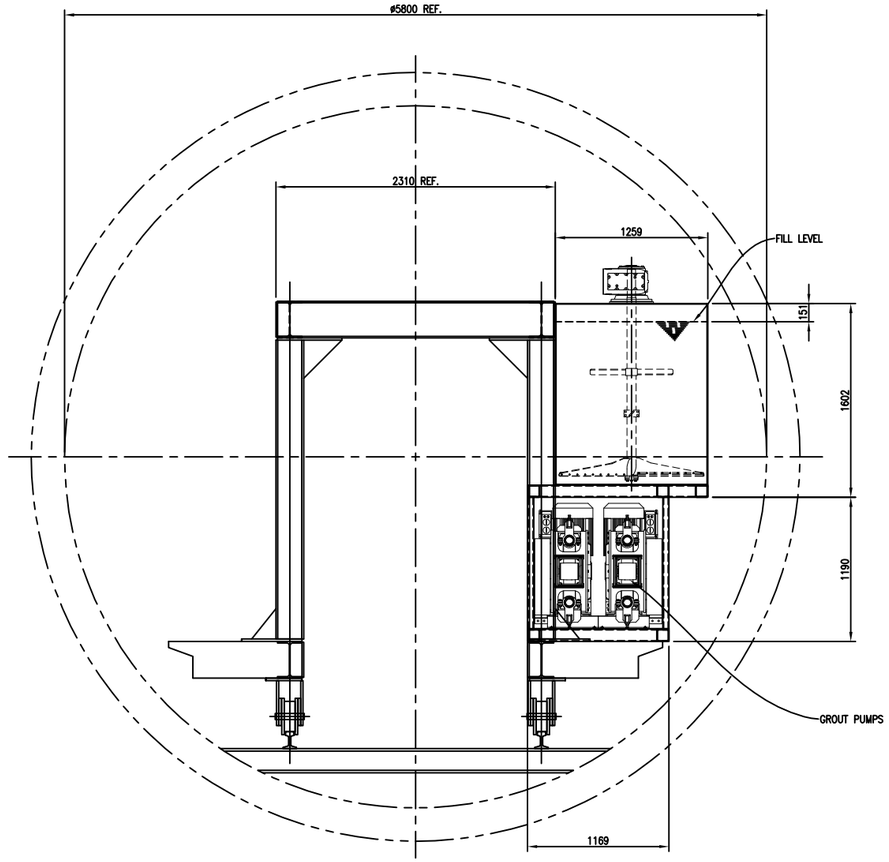

END VIEW

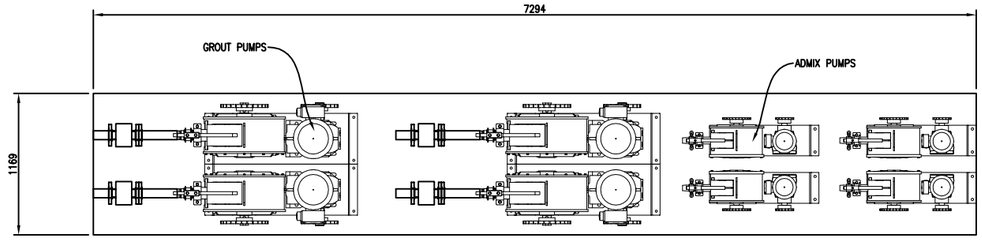

PLAN - PUMP LAYOUT

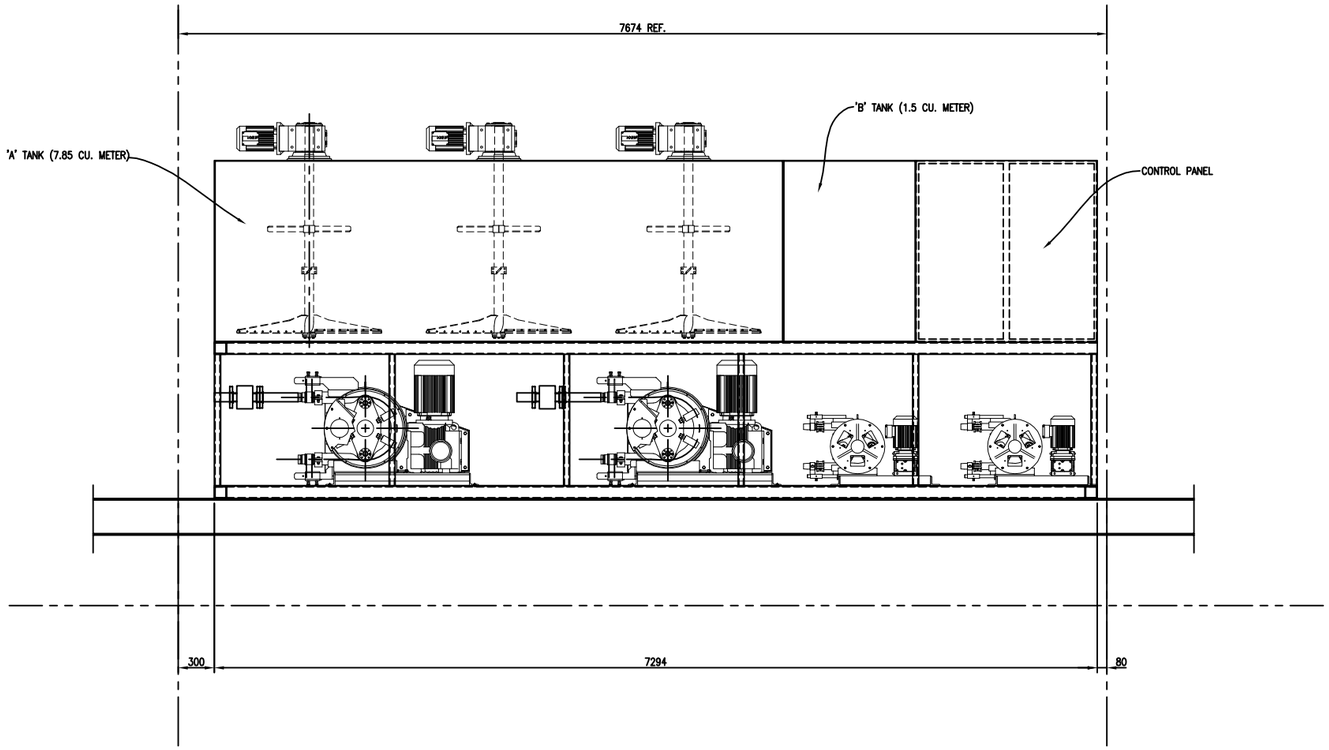

ELEVATION

REV	DATE	REMARKS	BY	CHK
A	7 FEB 12	FOR QUOTE	BW	

THIS DRAWING IS THE PROPERTY OF TEAM MIXING TECHNOLOGIES INC. AND MAY NOT BE REPRODUCED OR USED FOR ANY PURPOSE WITHOUT THE EXPRESS WRITTEN PERMISSION OF TEAM MIXING TECHNOLOGIES INC.

MAT'L:	G40.21-44W/ASTM A-36 U.N.O.
HOLES:	13/16"ø U.N.O.
WELDS:	3/16" FILLET U.N.O.
FINISH:	AS PER SPECIFICATION

Team Mixing Technologies Inc.
Unit 1A–30528 Great Northern Avenue
Abbotsford BC V2T 6H4 Canada
Ph +1 604 556 7225 Fax +1 604 556 7215
E–mail: info@teammixing.com Web: www.teammixing.com

CLIENT:	THE ROBBINS COMPANY
PROJECT:	REAR SHIELD BACKFILL GROUTING SYSTEM
AREA:	–
TITLE:	GROUT TANK AND PUMPS

DRAWN:	BW	DATE:	FEB 12
CHECK:	–	DATE:	–

SCALE: (U.N.O.)	FAB W.O. No.	DRAWING No.	REV
–	Q849	Q849–1	A

QTY	PART No.	DESCRIPTION	DWG No.	WT. Total	ITEM
-					1
1	D122837-1	ADDITIVE TANK/PUMP ASSY, 6M^3	D122837	2470.8	2
2	A115487-1	PRESSURE SENSOR ASSY, 1.0MPa	A115487	1.36	3
(2)	2005938	ADDITIVE PUMP ASSY	2005938		4
2	2002348	FLOW METER, 2 INCH	2002348	2.0	5
5	2006956	BALL VALVE, ELECTRIC, 2" NPT	2006956	6.8	6
1	A76299-8	BALL VALVE, 2" NPT	A76299	5.0	7
5	A116506-8	BALL VALVE, 3-WAY	A116506	9.0	8
(5)	A76299-7	BALL VALVE 1-1/2" NPT	A76299		9
(5)	A78204-7	SWING CHECK VALVE 1-1/2"	A78204		10

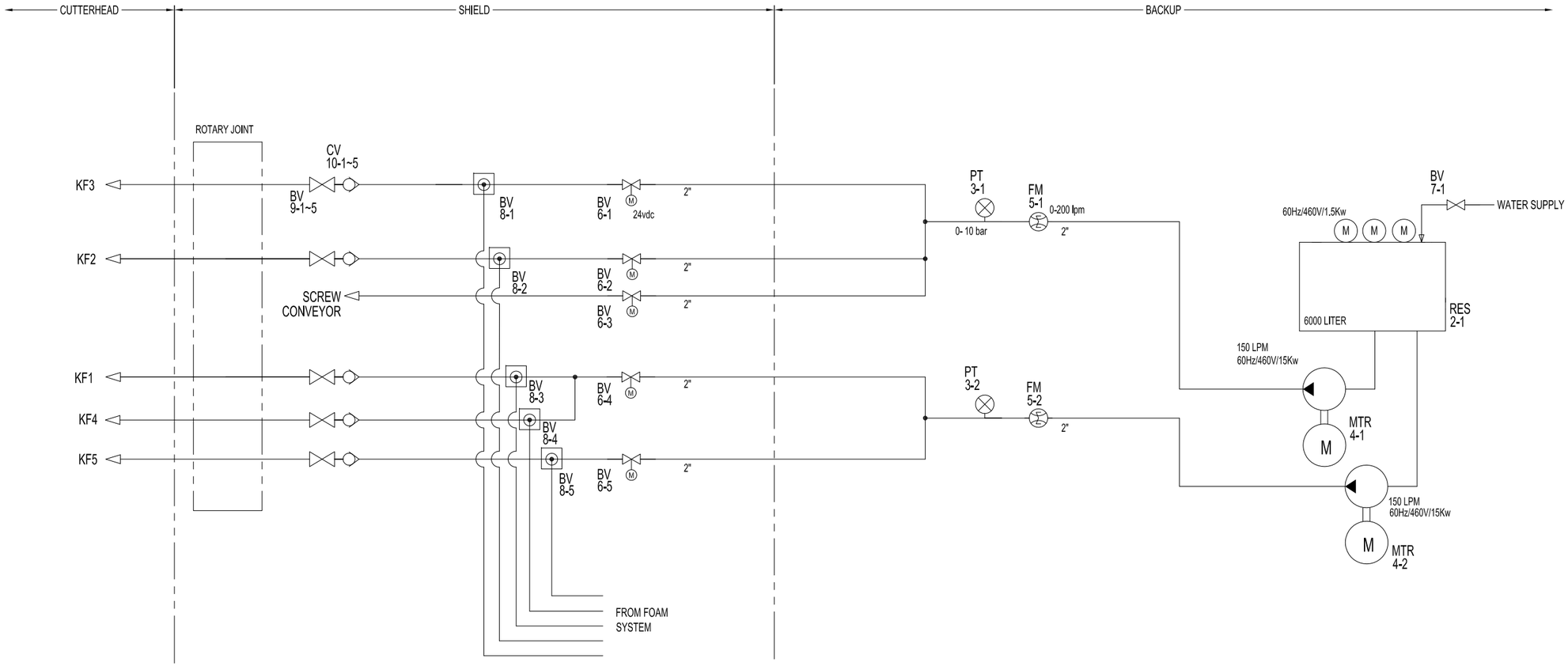

PROPRIETARY NOTICE
The information contained in this drawing is the property of The Robbins Company, and contains trade secret information. It is submitted in confidence and is not to be disclosed to any other party without prior written consent of The Robbins Company. Reproduction of any part of this drawing is prohibited unless it bears the notice. Without any modification.
Any party receiving this drawing shall be bound by these terms to the extent to be determined by the laws of the State of Washington.

MACHINE	NEXT ASSY
EPB2016-376	1046800
EPB2016-377	

UNLESS NOTED ALL DIMS ARE mm
TOLERANCES UNLESS NOTED

FRACTIONS	DECIMALS	ANGLES
0-300 ± 1.5	X ± 1.5	± 1
300-1500 ± 3	X.X ± 1.0	
1500-6000 ± 6	X.XX ± .40	
6000+ ± 12	X.XXX ± .100	

SURFACE 6.3

DIMENSIONS (X) ARE REFERENCE
ALL GEOMETRIC DIMENSIONING & TOLERANCING PER ASME Y14.5-2009

REV	DESCRIPTION	REV'D BY/ DATE	APP'D BY/ DATE

TITLE: ADDITIVE INJECTION SYSTEM

SIZE: D | DWG No.: 1046867 | REV: 0 | SHT 1 OF 1 | SCALE: 1:1 | DO NOT SCALE

DRAWN BY: D.DONLEY DATE: 3/20/12
CHECKED DIMENSIONS: C.SNIDER
CHECKED DESIGN: D.DONLEY
RELEASED BY: J.HEINEMAN DATE: 3/20/12

FINISH TOTAL: 2561.5

Robbins

www.TheRobbinsCompany.com

1046867

Notes:
1. Operator must select target pressure for secondary face support system based on expected ground conditions.
2. When earth pressure drops below 75% of the target pressure, open BV 6-1 & BV 6-2, and start MTR 4-1.
3. Close BV 6-1 & 6-2, and stop MTR 4-1 when earth pressure reaches target level.
3. Low level on bentonite tank displays warning on operators console.
4. Machine operation is interlocked to this system being operational.

QTY	PART No.	DESCRIPTION	DWG No.	WT. Total	ITEM
-					1
1	D122837-1	ADDITIVE TANK/PUMP ASSY, 6M^3	D122837	2470.8	2
2	A115487-1	PRESSURE SENSOR ASSY, 1.0MPa	A115487	1.36	3
(2)	2005938	ADDITIVE PUMP ASSY	2005938		4
2	2002348	FLOW METER, 2 INCH	2002348	2.0	5
6	2006956	BALL VALVE, ELECTRIC, 2" NPT	2006956	6.8	6
1	A76299-8	BALL VALVE, 2"	A76299	5.0	7
4	A116506-8	BALL VALVE, 3-WAY	A116506	9.0	8
(6)	A76299-7	BALL VALVE 1-1/2" NPT	A76299		9
(6)	A78204-7	SWING CHECK VALVE 1-1/2"	A78204		10

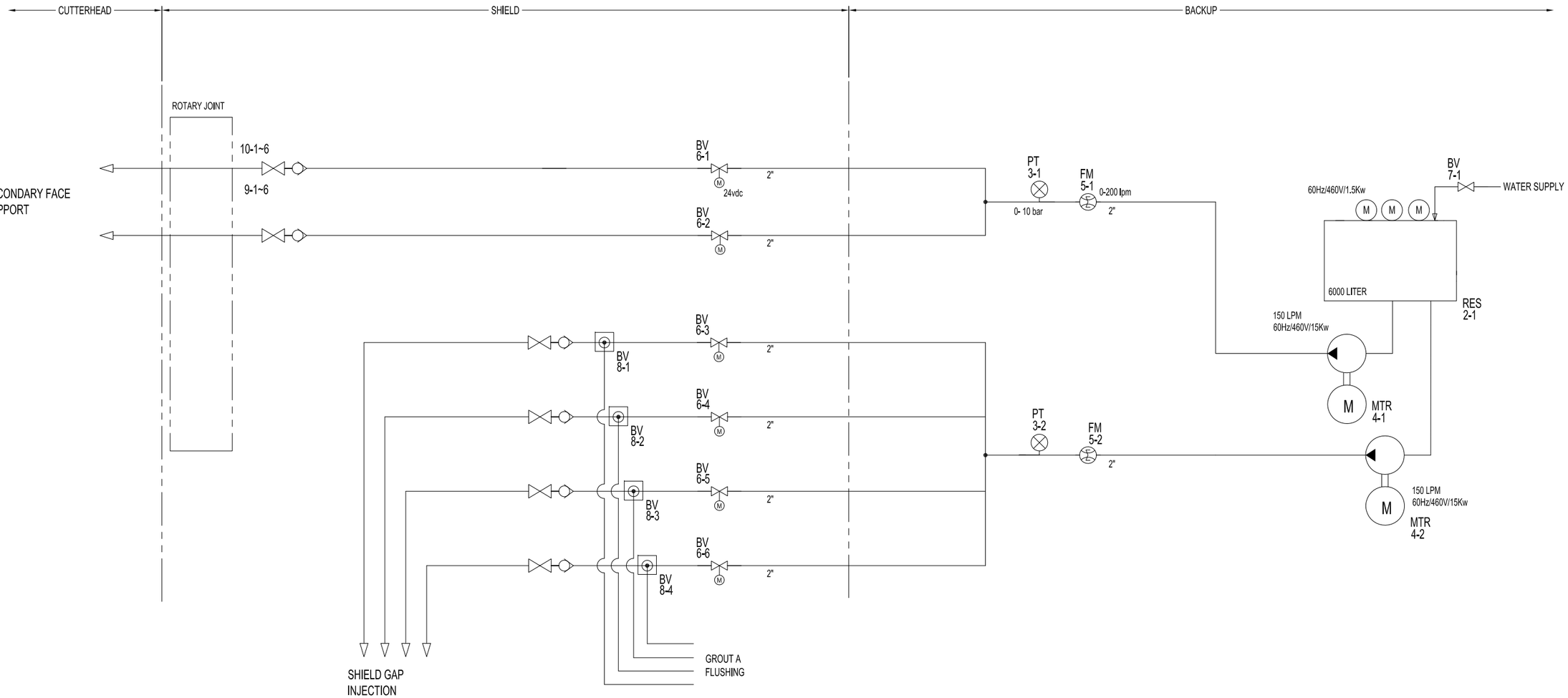

PROPRIETARY NOTICE
The information in this drawing is the property of The Robbins Company, and reveals their valuable property & shall not be used (except as authorized in writing by The Robbins Company), reproduced, or disclosed to others in whole or in part, without prior written consent of The Robbins Company. The recipient of this drawing by its retention agrees to be bound with the notice. Without any modification to the notice, to the extent it relates to the drawing, and agrees to its removal upon request by The Robbins Company.

MACHINE	NEXT ASSY
EPB2016-376	1046800
EPB2016-377	

UNLESS NOTED ALL DIMS ARE mm
TOLERANCES UNLESS NOTED
0-300 ± 1.5 | X ± 1.5
300-1000 ± 3 | X.X ± 1.0
1000-6000 ± 6 | X.XX ± .40
6000+ ± 12 | X.XXX ± .100
ANGLES ± 1°
SURFACE 63
FINISH ALL OVER
DIMENSIONS (X) ARE REFERENCE
ALL GEOMETRIC DIMENSIONING & TOLERANCING PER ANSI Y14.5-2009

REV	DESCRIPTION	REV'D BY / DATE	APP'D BY / DATE

TITLE: BENTONITE SYSTEM

SIZE	DWG No.	REV	SHT	SCALE
D	1046884	0	1 of 1	1:1

DO NOT SCALE

DRAWN BY	CHECKED DIMENSIONS
D.DONLEY	C.SNIDER
DATE 3/21/12	CHECKED DESIGN D.DONLEY
WEIGHT TOTAL 2559.3	APPROVED BY J.HEINEMAN
	DATE 3/21/12

Robbins
www.TheRobbinsCompany.com

1046884

MODEL EPB2016-376/377
SECTION 19 • Position Monitoring Equipment

1. Guidance system assembly
2. Enzan literature
3. Purged theodolite enclosure

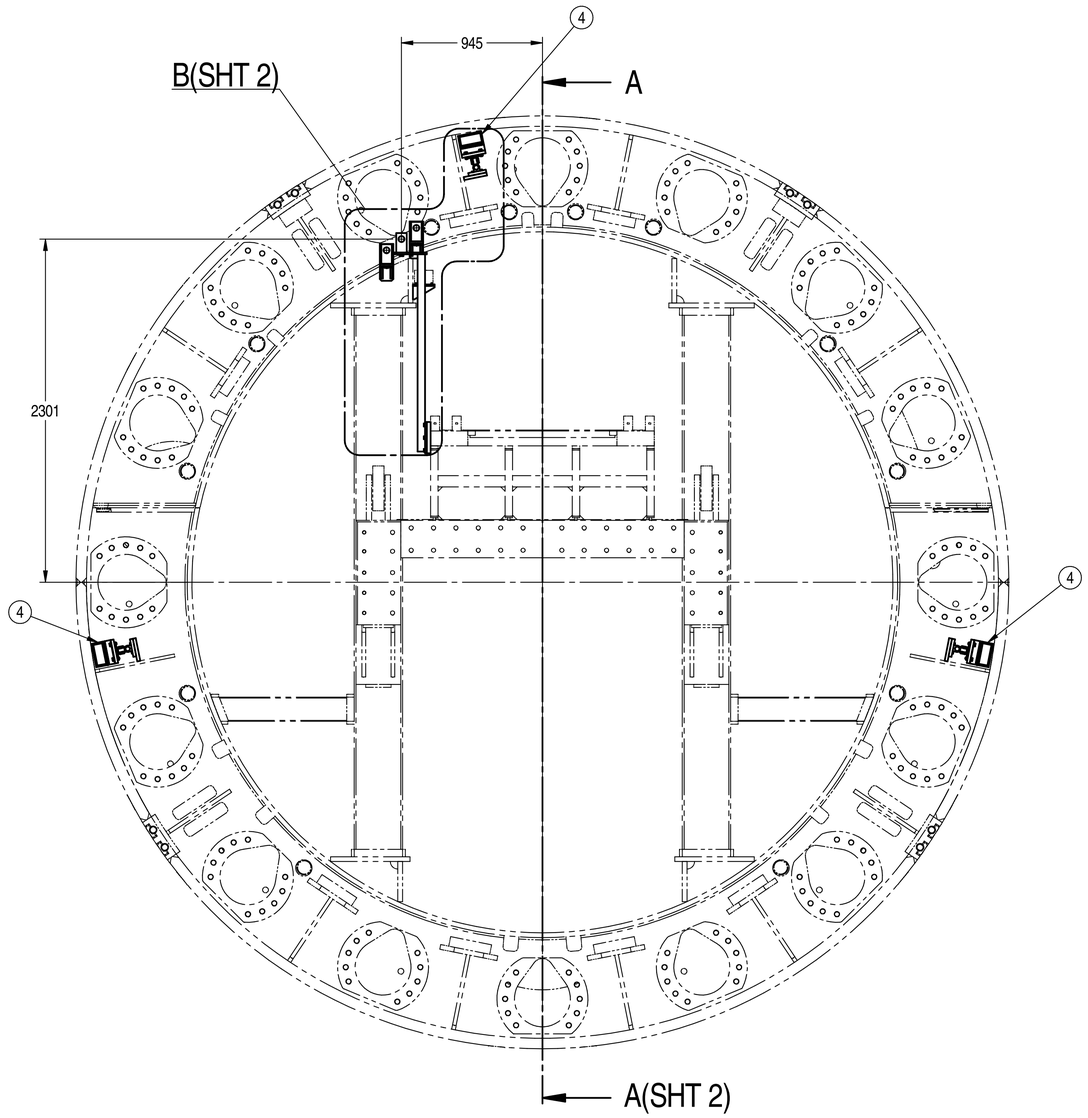

TRC P/N 1002838
GUIDANCE SYSTEM ASSEMBLY

QTY	PART No.	DESCRIPTION	DWG No.	WT. Total (kgs)	ITEM
1	1046916-1	TBM GDNC & MONITORING SYS, CL 1 DIV 2	1046916	1.8	1
1	A115800-4	RING SELECTION PROGRAM OPTION	A115800		2
1	A115800-5	SITE COMMISSIONING	A115800		3
3	1046916-2	TAIL CLEARANCE MEASURE OPTION-CLASS 1 DIV 2	1046916	32.8	4
1	1051146	GUIDANCE SYS, SUPPORT POST	1051146	13.5	5
1	1030989	GUIDANCE SYS, MTG. PLATE	1030989	7.3	6
3	1028645	LCD MONITOR WALL MOUNT BRACKET	1028645	8.4	7
1	1030951	MOUNTING BRACKET, INCLINOMETER	1030951	3.2	8
2	1030807	BRACKET	1030807	8.2	9
3	1051538	PAD, TAP	1051538	22.2	10
3	1051542	PAD, TAP, SHIELD	1051542	5.8	11
12	A22152-10405	HHCS, M6x40mm C8.8	A22152	0.1	12
6	A22152-30305	HHCS, M10x30mm G8.8	A22152	0.2	13
12	A22152-40405	HHCS, M12x40mm G8.8	A22152	0.6	14
28	A22153-00205	SHCS, M4x20mm C8.8	A22153	0.1	15
3	608-150	HHCS, Ø5/8"-11 UNCx1-1/4" G8		0.3	16
4	A22154-05	NUT, M4 C8	A22154	0.0	17
12	A22154-45	NUT, M12 C8	A22154	0.2	18
12	A22158-1	WASHER, HD NW OD M6	A22158	0.0	19
6	A22158-3	WASHER, HD NW OD M10	A22158	0.0	20
12	A22158-4	WASHER, HD NW OD M12	A22158	0.1	21
4	0301231500	WASHER, PLAIN M4		0.0	22
3	633-008	WASHER, PLAIN Ø5/8"		0.0	23
1	1051559	HOSE REEL ASSEMBLY	1051559	168.3	24

NOTES:

1 ITEM 24 IS NOT SHOWN ON DRAWING. MOUNT TO TOP SIDE OF GANTRY AS SHOWN ON BACKUP ASSEMBLY DRAWINGS.

PROPRIETARY NOTICE
The information disclosed hereon, is the sole property of The Robbins Company, and remains their sole property. It shall not be duplicated in full or part, used by, or disclosed to any other party without prior written consent of The Robbins Company. By accepting this information, recipient agrees to abide in total with this notice, without any modification whatsoever to the conditions. This material is on loan only, and is to be returned upon request to The Robbins Company.

MACHINE	NEXT ASSY
EPB2016-376	1002830
EPB2016-377	

UNLESS NOTED ALL DIMS ARE mm
TOLERANCES UNLESS NOTED

FAB (mm)		MACHINING (mm)	
0-300	±1.5	X	±1.5
300-1500	±3	X.X	±1.0
1500-6000	±6	X.XX	±0.40
6000+	±12	X.XXX	±0.100
		ANGLES	±1°
THIRD ANGLE PROJECTION		SURFACE FINISH	6.3

DIMENSIONS (X) ARE REF
ALL GEOMETRIC DIMENSIONING & TOLERANCING PER ANSI Y14.5-2009

REV	DESCRIPTION	REV'D BY/ DATE	APP'D BY/ DATE

TITLE
GUIDANCE SYSTEM ASSEMBLY

SIZE D | DWG No. 1002838 | REV 0 | SHT 1 OF 2 | SCALE 1:20
DO NOT SCALE

Robbins

DRAWN BY J.SPRAGUE
DATE 7/31/2012
CHECKED STANDARDS J.HEINEMAN
CHECKED DESIGN J.HEINEMAN
UNIT OF MEASURE Each
APPROVED BY J.HEINEMAN
WEIGHT TOTAL 116.1 kg
DATE 8/30/2012

www.TheRobbinsCompany.com

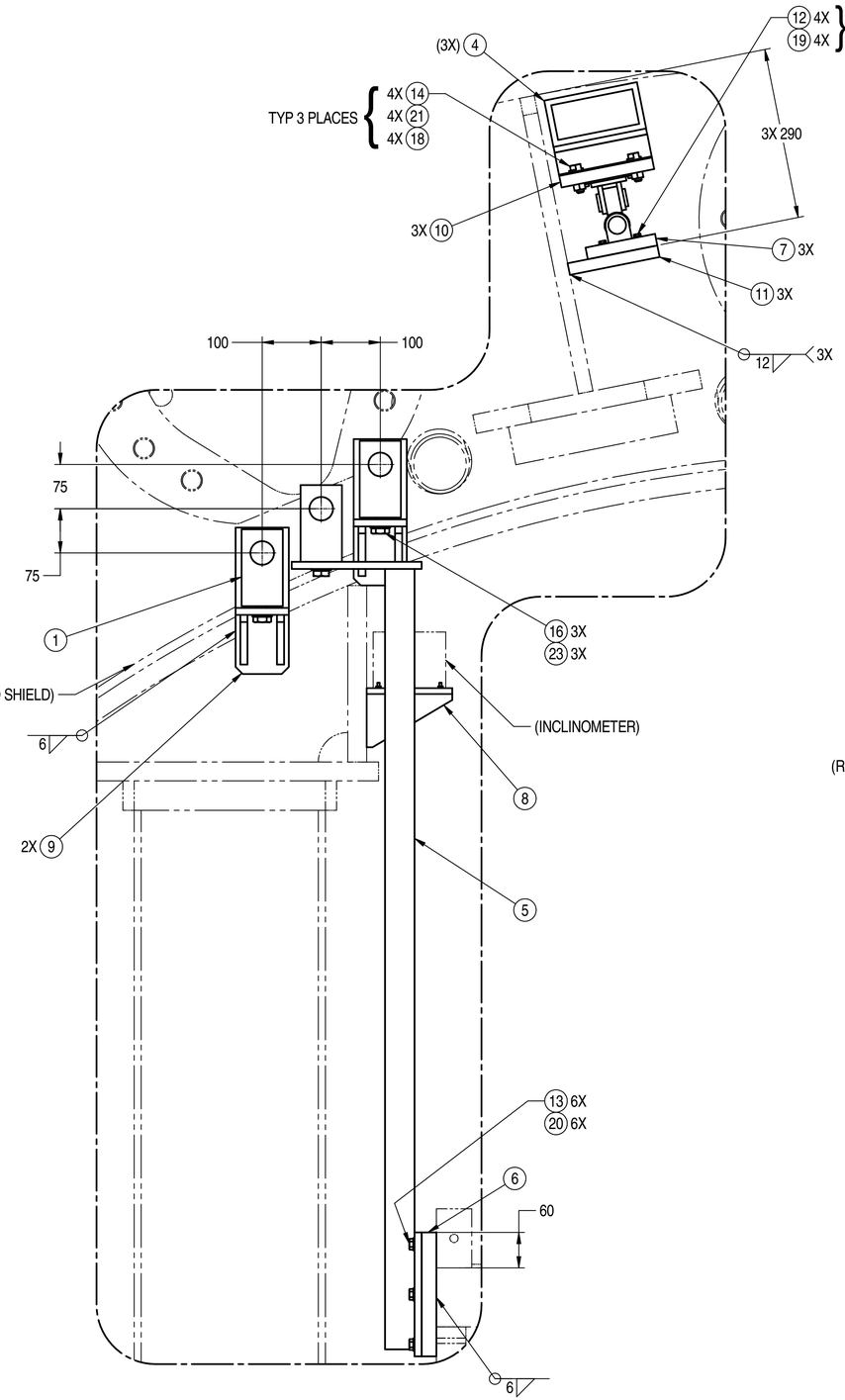

DETAIL B (SHT 1)
SCALE 1:5

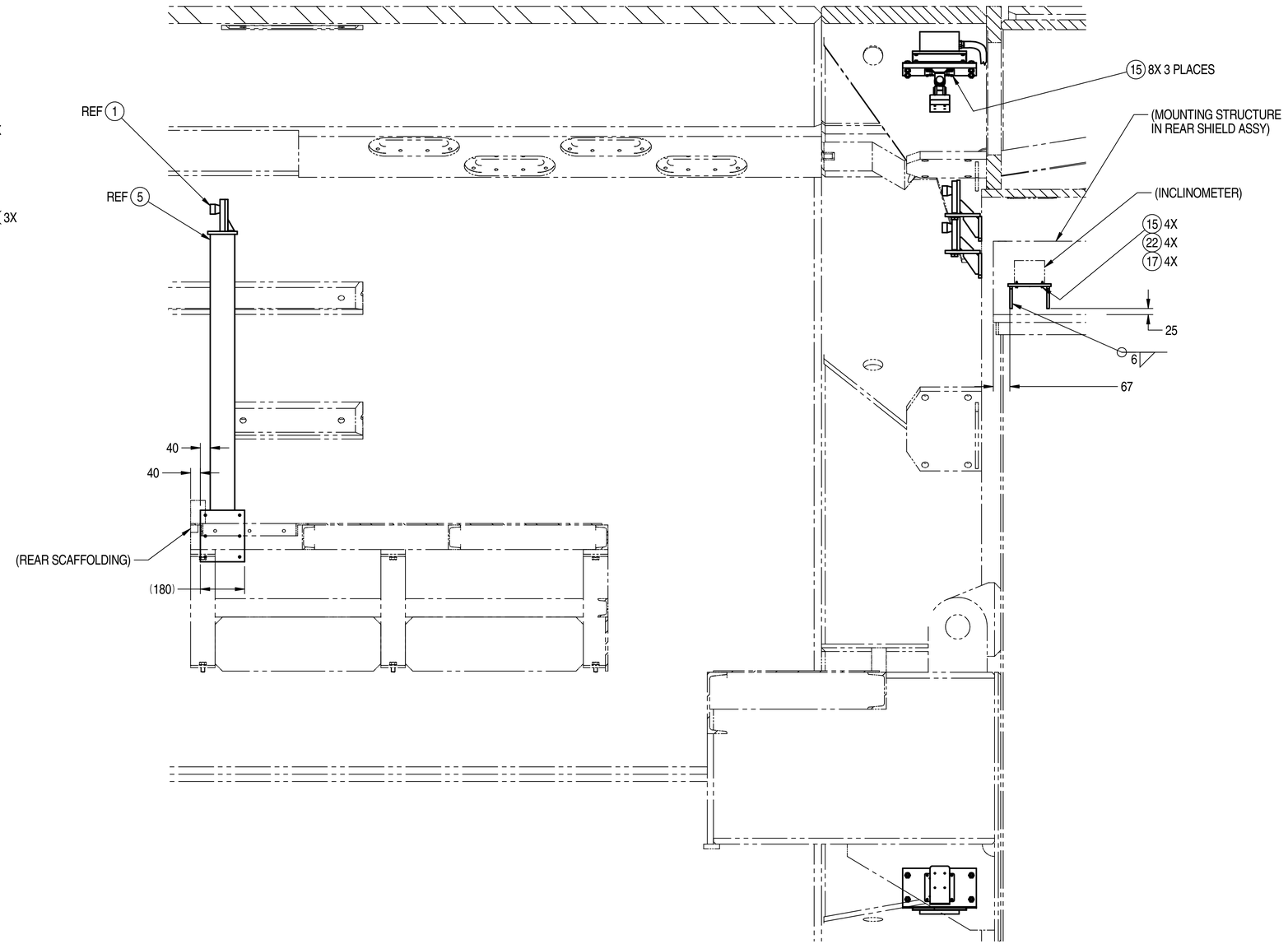

SECTION A-A (SHT 1)
SCALE 1:10

PROPRIETARY NOTICE
The information disclosed hereon, is the sole property of The Robbins Company, and remains their sole property. It shall not be copied, used, or disclosed to any other party without prior written consent of The Robbins Company. By accepting this information, recipient agrees to defend, indemnify and hold harmless, without any restrictions whatsoever to the conditions. This material is on loan only, and is to be returned upon request to The Robbins Company.

MACHINE	NEXT ASSY
EPB2016-376	1002830
EPB2016-377	

UNLESS NOTED ALL DIMS ARE mm

TOLERANCES UNLESS NOTED

FRACTIONS	DECIMALS (mm)
0-300 ±1.5	X ±1.5
300-1500 ±3	X.X ±1.0
1500-6000 ±6	X.XX ±0.40
6000+ ±12	X.XXX ±0.100
	ANGLES ±1°
THIRD ANGLE PROJECTION	SURFACE FINISH 6.3

DIMENSIONS (X) ARE REF

ALL GEOMETRIC DIMENSIONING & TOLERANCING PER ANSI Y14.5-2009

REV	DESCRIPTION	REV'D BY/ DATE	APP'D BY/ DATE

TITLE
GUIDANCE SYSTEM ASSEMBLY

SIZE	DWG No.	REV	SHT	SCALE
D	1002838	0	2 OF 2	1:1

DO NOT SCALE

DRAWN BY	J.SPRAGUE
DATE	7/31/2012
CHECKED STANDARDS	J.HEINEMAN
CHECKED DESIGN	J.HEINEMAN
UNIT OF MEASURE	Each
APPROVED BY	J.HEINEMAN
WEIGHT TOTAL	116.1 kg
DATE	8/30/2012

Robbins

Shield tunneling method

Excavation Management System

ARiGATAYA Ver.3.0

INTRODUCTION

This is the instruction manual for the excavation management PC software of ARiGATAYA Ver.3.0, the Shield Tunneling Method Excavation Management System. Carefully read through the instruction manual before use so as to be familiar with the information provided herein so that the system is used efficiently in the actual work management.

1. Scope of Application

[1] This manual describes the instructions for the excavation management PC software for its use on or under the ground, as the integral part of the Shield Tunneling Method Excavation Management System ARiGATAYA Ver.3.0.
[2] No instructions for the system hardware is included. With regard to the hardware, see the separate instruction manual as the need arises.
[3] The Management System works on Windows2000* or WindowsXP* of Microsoft Corporation. See the respective instruction manuals for their use.

* Windows2000 and WindowsXP are registered trademarks of Microsoft Corporation.

2. Composition of Manual

This instruction manual is composed of nine (9) separate functional volumes so that you may easily access the required information corresponding to the current job.

Volume No.	Volume Name	Function	Content
No. 01/09	Start-up	General	Read-me-first description.
No. 02/09	System Summary	General	Summary of ARiGATAYA Ver. 3.0, including hardware configuration, major functions, etc.
No. 03/09	Basic On-screen Operation	General	Description on the operating procedure common to each function.
No. 04/09	Measure Control	Mech. & Elect.	Function to graphically display the measurement values and such of the excavator and other associated hardware, within the excavation management functions.
No. 05/09	Management Function	Mech. & Elect.	Function to make a table of the data stored in the PC, tally the data and graphically display the statistics.
No. 06/09	Survey Function	Civil work	Function to support the alignment control, tunnel survey, etc.of the shield tunneling method.
No. 07/09	Document Function	General	Function to print out the data stored in the PC in various document forms.
No. 08/09	Maintenance	General	Function to implement maintenance of the System.
No. 09/09	Setting Function	General	Function to determine various settings of the System.

3. Technical Support

See the separate Technical Support Chart for our customer support with regard to a trouble for which you do not find the troubleshooting in the manual or a hardware trouble.

4. Disclaimer

The ARiGATAYA Ver.3.0 System, composed of the software and various associated hardware, treats the measurement values (especially concerned with the measurement hardware) on the premise that they are true and correct. It is, therefore, necessary that the measurement hardware kept in optimum condition is always used.
We assume no responsibility for any damages resulting from the use of the System or for the damages previously informed by us as well as damages, losse and harm caused to the User.

The copyright of this manual belongs to enzan koubou Co., Ltd. It is strictly prohibited to duplicate, distribute and disclose the content without our prior approval. Any content of this website may neither be duplicated nor distributed without prior approval.

Shield tunneling method

Excavation Management System

ARiGATAYA Ver.3.0

CONTENTS

Basic Functions Overview	Page 2
1. Signal Gathering	Page 3
2. Data Generation	Page 4
3. Data Recording and Saving	Page 5
4. System Mode	Page 6
5. Ring Start / Ring Finish (1)~(2)	Page 6~7
6. Gathered Data Monitoring (1)~(2)	Page 8~9
7. Gathered Data Management	Page 10
8. Saved Data Display	Page 11
9. Documentation	Page 12
10. Data Utilization	Page 13

The ARiGATAYA Ver.3.0 System, composed of the software and various associated hardware, treats the measurement values (especially concerned with the measurement hardware) on the premise that they are true and correct. It is, therefore, necessary that the measurement hardware kept in optimum condition is always used.
We assume no responsibility for any damages resulting from the use of the System or for the damages previously informed by us as well as damages, loss, and harm caused to the User.
The copyright of this manual belongs to enzan koubou Co., Ltd. It is strictly prohibited to duplicate, distribute, and disclose the content without our prior approval. Any content of this website may neither be duplicated nor distributed without prior approval.

Basic Functions Overview

1. Signal Gathering	[1] Sampling cycle	Approx. 3 seconds	
	[2] Number of signals	Max. 768 signals	
	[3] Signal sources	• Shield machine	Serial communication / Hard wiring
		• Grouting / Additive	Serial communication / Hard wiring
		• Muck volume measure	Serial communication / Hard wiring
2. Data Generation	[1] Generation cycle	Approx. 3 seconds	
	[2] Data to display	Instantaneous value (Process value) / Maximum value / Minimum value / Counter value	
	[3] Data to save	Final value / Average value	
3. Data Recording and Saving	[1] Time series data	Every 5 seconds (Date to display)	
	[2] Ring detail data	20 mm (Data to display)	
	[3] Ring typical data	At the end of excavation (Data to save)	
	[4] ML data	100 mm (Data to display)	
4. System Mode	[1] Excavation	The shield machine is in operation of excavation.	
	[2] Preparation	Excavation is temporarily suspended after it is started and the ring No. is updated.	
	[3] Erection	Segment erection is in progress or is complete and preparation for next excavation is under way.	
5. Ring Start / Ring Finish	Automatic determination of ring start / finish.		
6. Gathered Data Monitoring	[1] Main (Central monitor room)	All the screens are operational.	
	[2] Sub (Remote monitor)	Measure control screens can be monitored.	
	[3] Face (Cockpit)	Data not available on the control panel can be monitored on the operation monitor display.	
7. Gathered Data Management	Data of Earth pressure, Grouting, Additive, Muck volume are statistically represented on the monitor screen.		
8. Saved Data Display	The saved data are represented numerically and graphically.		
9. Documentation	Day Report and Ring Report (and Excavation Indication -optional-) are printed out. Note 1: Reports are printed in the standard formats. (See the document samples.) Note 2: Non-standard formats may be available as option.		
10. Data Utilization	The data can be used in Microsoft Excel and AutoCAD LT. Note 1: Microsoft Excel is included in the software package. Note 2: AutoCAD LT is available as option. Note 3: Data conversion software for AutoCAD LT is available as option.		

1. Signal Gathering

Every signal in the tunnel is imported to the ARiGATAYA interface installed in the trailing truck.

Signal sources in the tunnel are as follows.

[1] Shield Machine	Earth pressure, Operation status, etc.
[2] Grouting fill data	Fill flow rate, fill pressure, Total grouting counter, etc.
[3] Additive pouring data	Pouring flow rate, Pouring pressure, Total additive counter, etc.
[4] Muck measure data	Volume and Weight

* The interface imports these data every 3 seconds.
(The import cycle depends on the number of signals to import.)

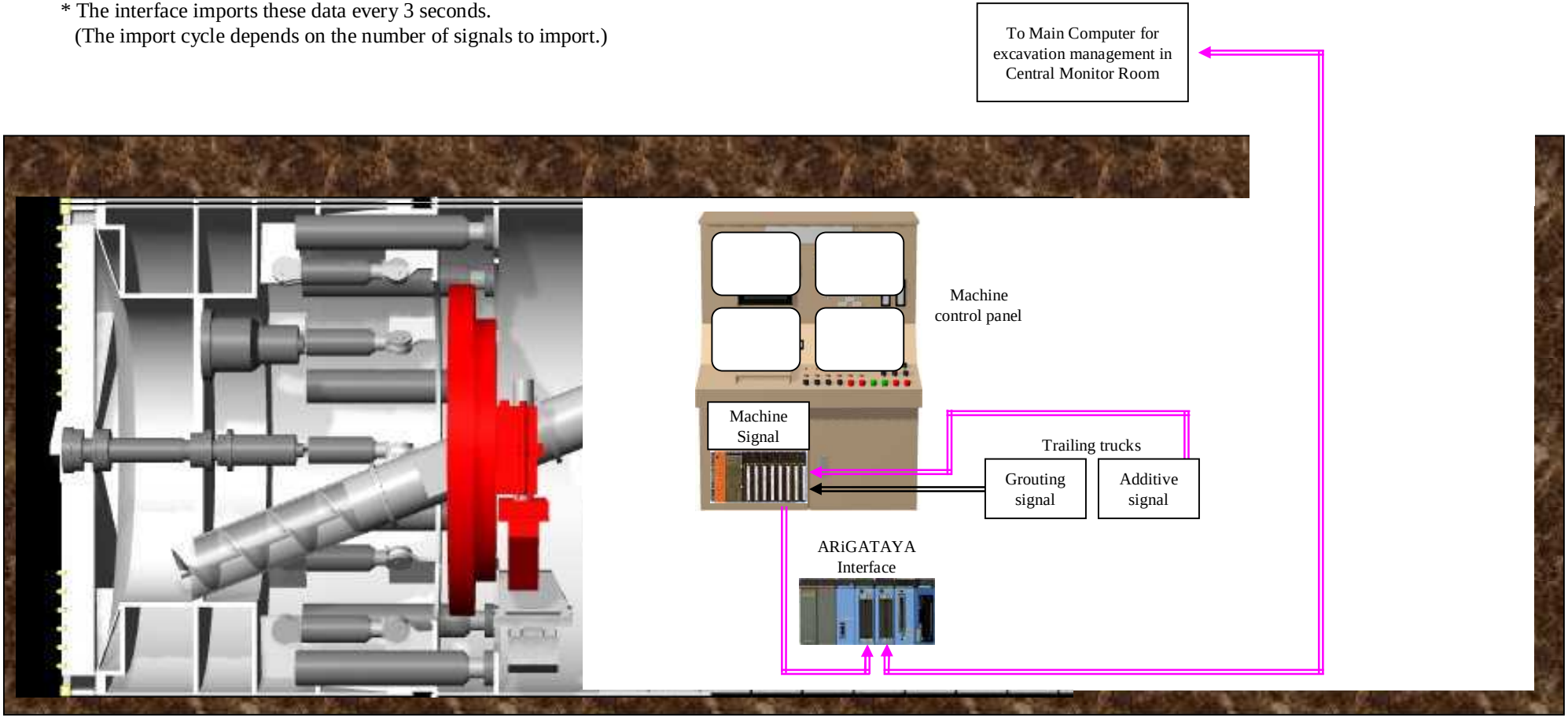

2. Data Generation

The signals imported to the ARiGATAYA interface are transferred to the computer in the tunnel and the excavation management main computer.

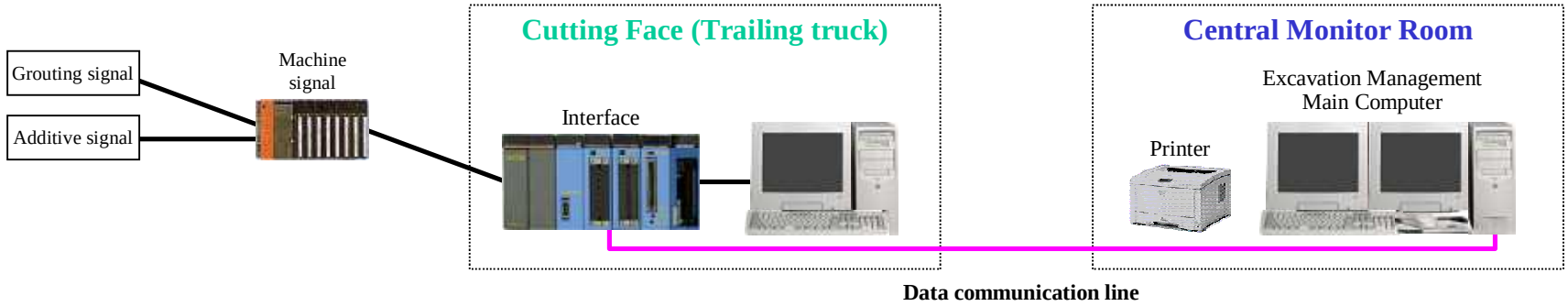

The main computer records the imported information in the predetermined signal-by-signal data formats.
Data generation cycle is approximately 3 seconds (depending on the number of handling signals).
There are two types of data: data to display and data to save.

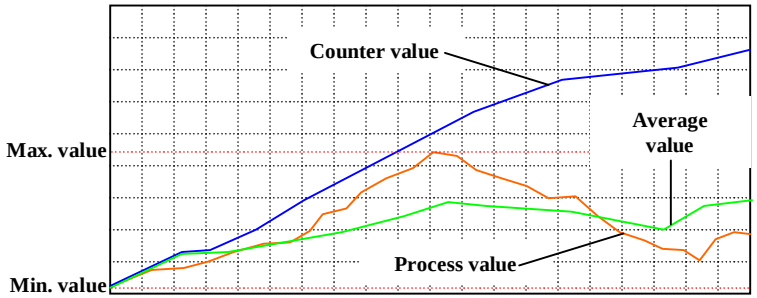

1. Data to display

[1] Process value — Data imported to the main computer (i.e. instantaneous value in every import) is graded as the basic data. Data generation continues regardless of modes (excav., prep., and erect.).

Besides the instantaneous value, following value data are generated during excavation for each of the applicable gathering signals.

[2] Maximum value — For flow rate, speed, pitching, rolling, etc.
[3] Minimum value — For pressure, earth pressure, pitching, rolling, etc.
[4] Counter value — For grouting fill volume, additive pouring volume, cutter, and screw revolution, etc. (Sub-classifications of Counter value are Shift, Day and Cumulative.)

Note 1: The data are generated based on process values gathered during the excavation, from start to finish.
Note 2: Grouting and such are cumulated from a start of excavation up to a start of next excavation.

2. Data to save

A final value or an average value, depending on the data characteristic, is saved for data generation when excavation finishes.

- In principle, the maximum, minimum and counter values are final values.
- A process datum with which a numeric value is obtainable at the end of excavation is treated as a final value (e.g. Stroke, Pitching, Rolling, etc.).
- A process datum that becomes "zero" (i.e. no numeric value available) at the end of excavation is treated as an average value (e.g. Flow rate, Pressure, etc.).

3. Data Recording / Saving

Data imported into the computer are recorded in accordance with the following time schedules.

[1] Chronological data (Time series data)

All the **Data to display** are recorded every 5 seconds regardless of the excavation mode or erection mode.
The recorded data are saved in separate hourly files.

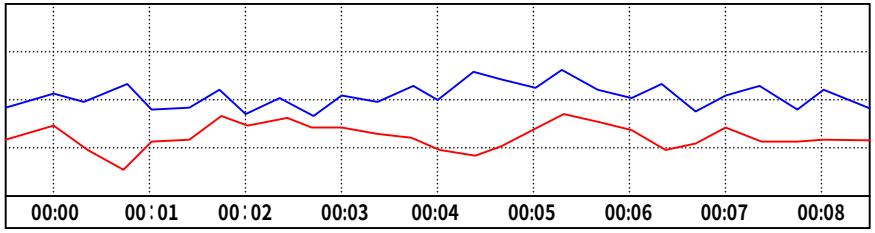

Hour [ ] / Day [ ] / Month [ ] / Year [ ]

[2] Data during excavation (Ring details data)

Data to display are recorded every gain of a stroke, which starts from zero at the beginning of excavation.
The recorded data are saved in separate ring-by-ring files.

※ Detail data each 20mm average value.
(The signal of pressure flow etc.)

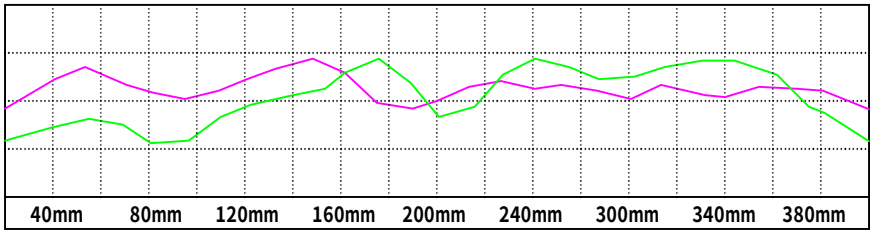

___Ring

[3] Data at the end of excavation (Ring typical data)

When excavation finishes, **Data to save** are recorded.
The recorded Data to save are saved in a single file that covers all the rings.

※ Average value except the start and end value.

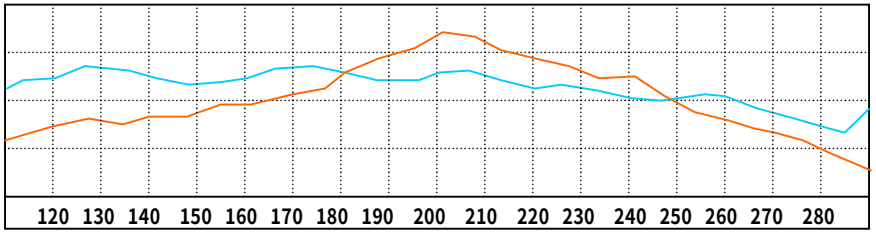

___Ring through to ___Ring

4. System Mode

Following system modes are provided for management in line with the status of the on-site operation.

[1] Excavation The shield machine is in operation of excavation.

[2] Preparation The shield machine is temporarily halted during excavation for change of the muck steel vehicle or for such a reason.

[3] Erection Segment erection is in progress or is complete and preparation for next excavation is under way.

5. Ring Start / Finish (1)

The system automatically determines Ring Start and Ring Finish based on the following signals.

[1] Net stroke
Average value of left and right measure jack strokes.
If either of the left or right measure jacks is inactive for measuring the stroke, the stroke measured by the active jack is employed.
* To basically be subject to tracking.

[2] Excavation
A state that the shield machine is actually in operation of excavation.
In general, it is determined with "Cutter rotation" and "Jack push" (and "Screw rotation").

[3] Excavation mode
A state that the cockpit is given preference for jack operation (i.e. ready for excavation).

[4] Segment mode
A state that the machine is given preference for jack operation (i.e. erector is operational).
* Normally, "Excavation mode" and "Excavation" are ON at the same time, but are never along with "Erection mode".

Combination of these signals and start/finish conditions allows the system to automatically determine Ring Start and Ring Finish.

[1] Start condition
Excavation can be started only when "Excavation" signal is ON while "Net stroke" is not more than the setting value.
This condition prevents the ring from proceeding when unnecessary button operation is made after a determination that excavation finished.
If once "Excavation", the ring does not finish even with "Segment mode" until the finish conditions are fulfilled.

[2] Finish condition
Excavation can be finished only when "Erection" is ON after the gain of "Net stroke" has exceeded the value obtained by multiplying the predetermined segment length by the finish ratio.
Leaving "Excavation mode" untouched without being switched to "Erection" after excavation is finished by button operation allows the system to remain in "Preparation".

5. Ring Start / Finish (2)

System Mode Flow Diagram

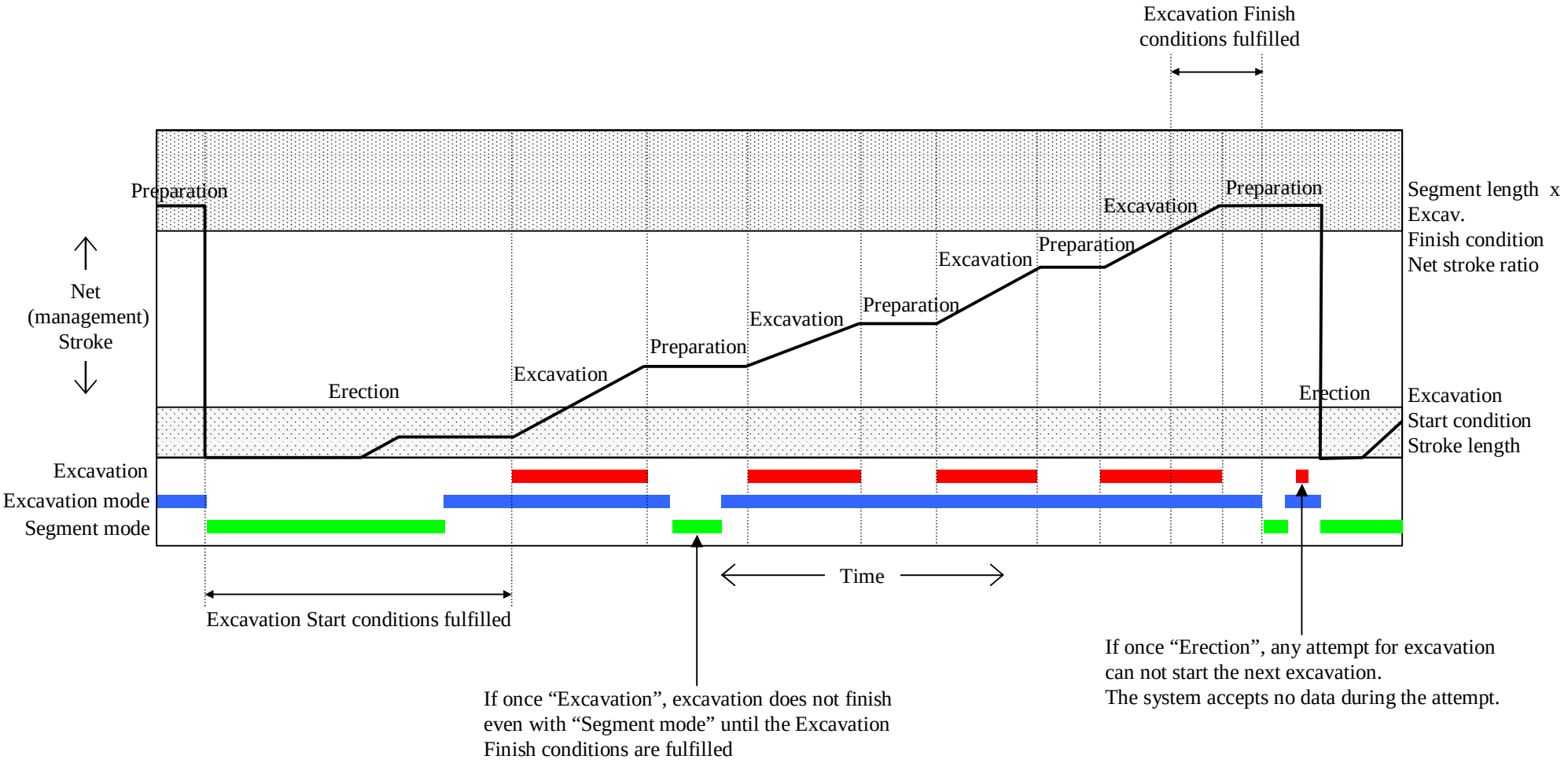

6. Gathered Data Monitoring (1)

Computer Screens to monitor the measurements.

Screen 1: Data-by-data display

This screen displays data numerically and graphically (bar graph and line graph) for each of signals allocated page by page. Line graph shows the ring detail data.

This screen is useful to observe the excavation progress.

A registration capacity equivalent to five pages is available for each of bar graph and line graph.

Screen 2: Data batch display for management purpose

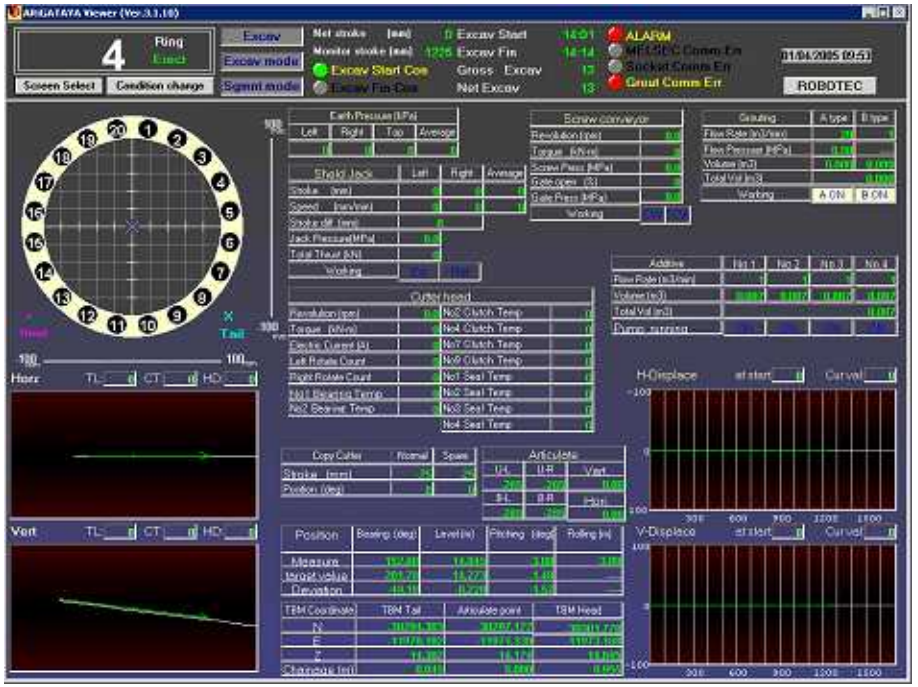

On this screen, all the data can be monitored at the same time for management purpose. The current position of the shield machine and the deviation are displayed as well.

Note: The two screens are not displayed at the same time. Switch between the screens as needed in use.

6. Gathered Data Monitoring (2)

Screens for graphic display of the gathered data on the main computer in the central monitor room.

Real time graph

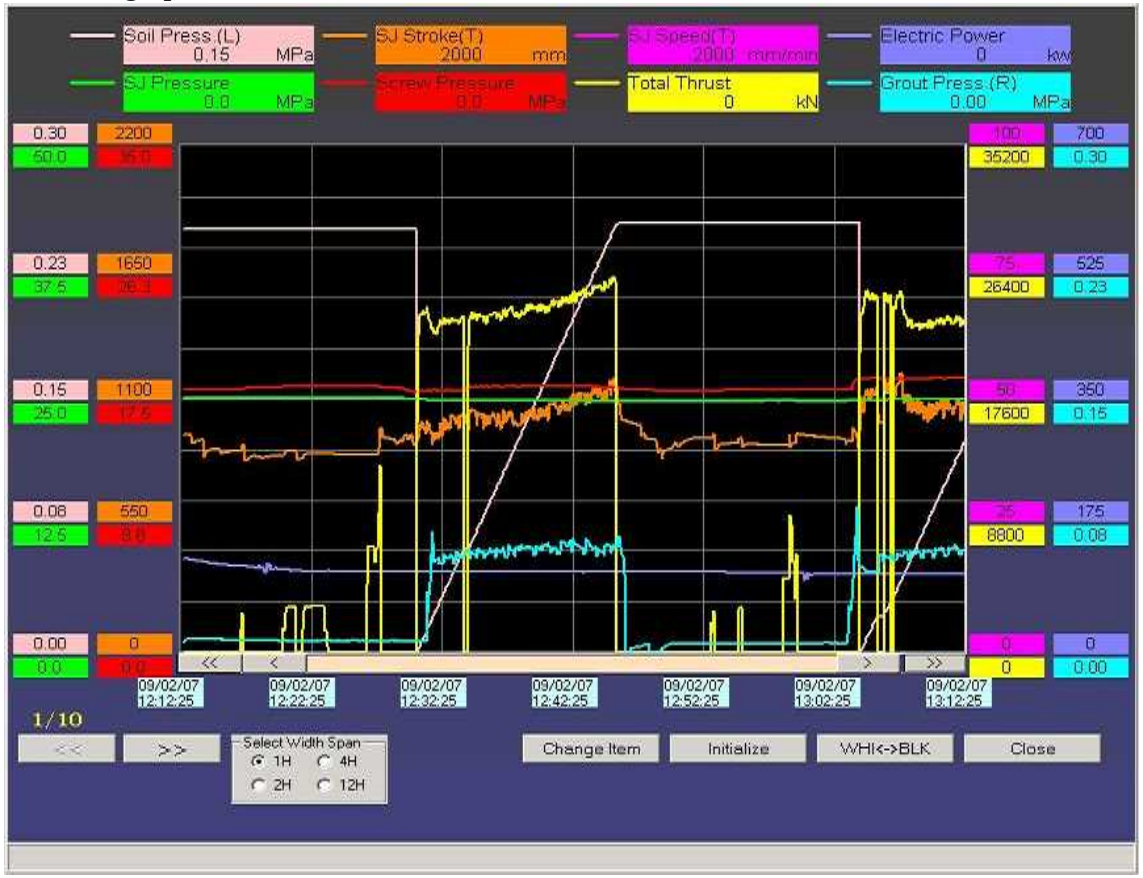

This screen graphically represents up to eight time-series data (gathered every 5 seconds).
It enables observation of chronological progress of excavation.

7. Gathered Data Management

The control value for each of Earth pressure, Grouting, Additive, Foam and Muck volume is calculated, using a statistical method, based on the ring data typical of the past *n* rings.

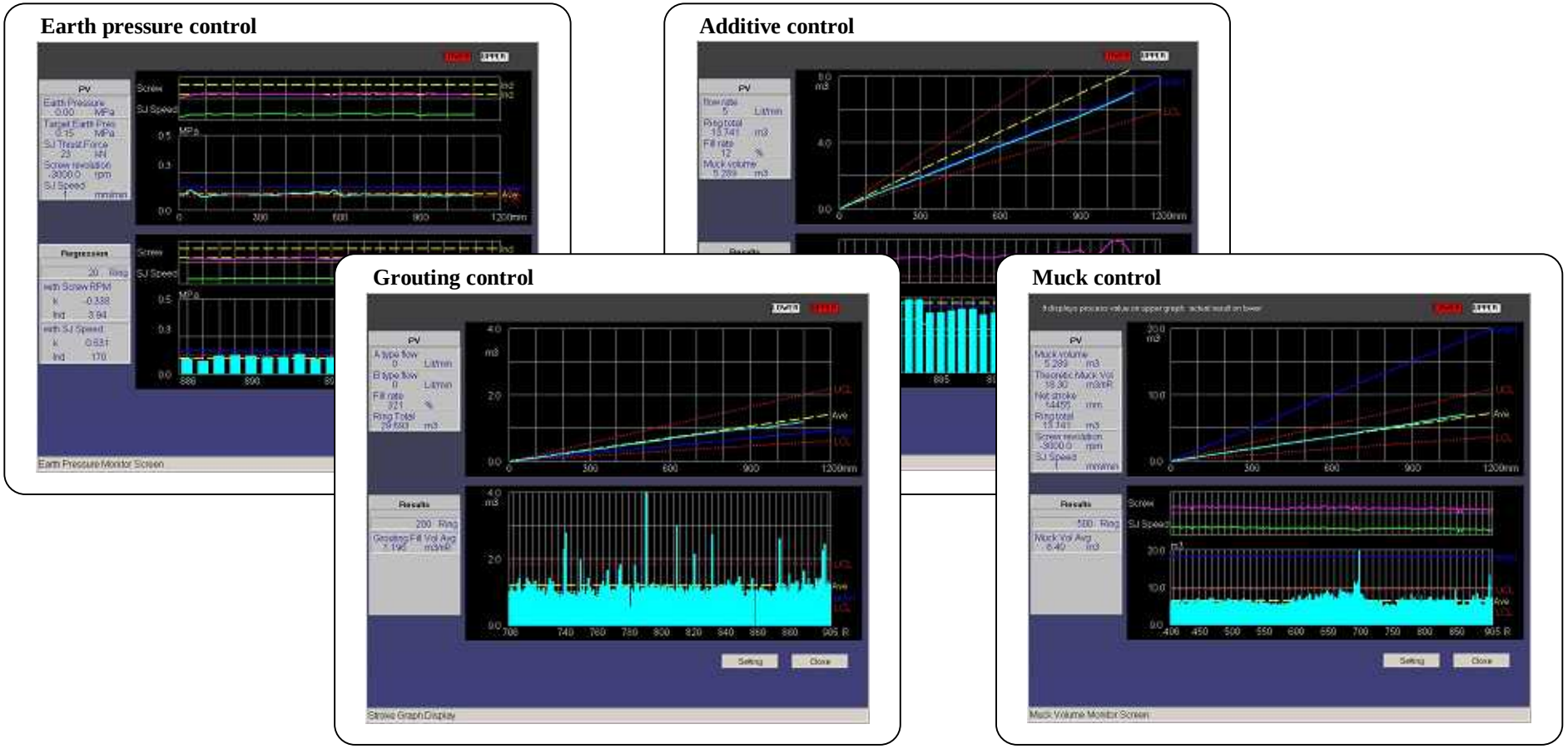

Each screen displays two graphs: Excavation Graph (ring detail data) on the top and Progress Graph (ring typical data) on the bottom.

Average value, UCL (upper control limit) and LCL (lower control limit) are given based on the ring data typical of the past n rings provided on the bottom.

If the current value goes beyond either limit, the color of LOWER or UPPER changes to red to indicate occurrence of abnormal state.

8. Display and Modification of Saved Data

The past data saved on the computer can be monitored and modified on the maintenance screens.

Daily Ring File Maintenance

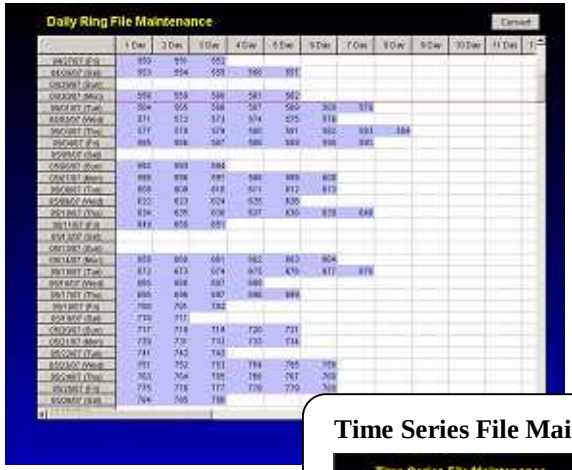

Ring Detail File Maintenance

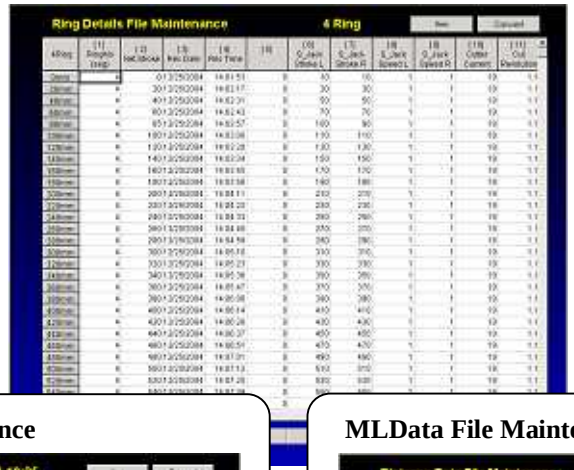

Ring Typical File Maintenance

Time Series File Maintenance

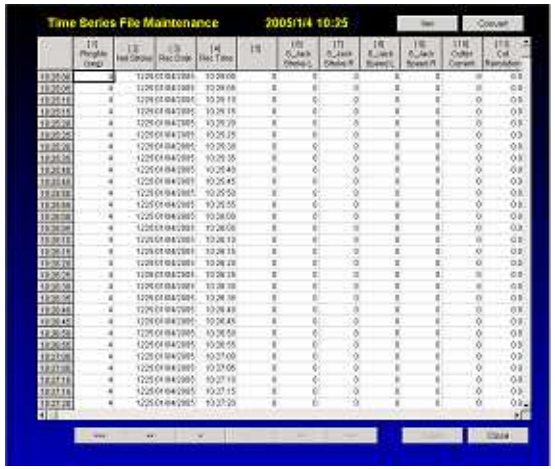

MLData File Maintenance

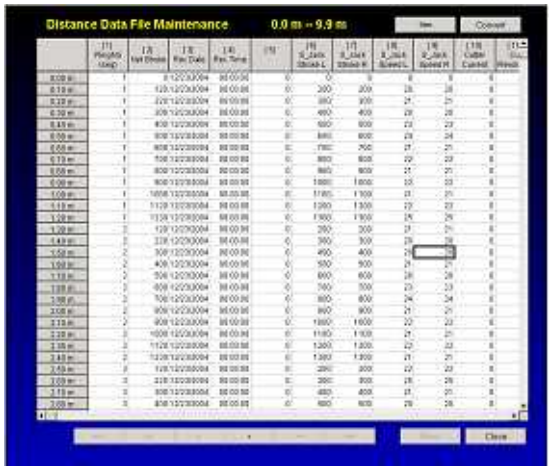

Every data cane be modified and saved.

These data are saved as the reference data for screen display and documentation.

9. Documentation

The System automatically makes up reports using the data saved on the computer.

Excavation Ring Data Report

Excavation Day Report

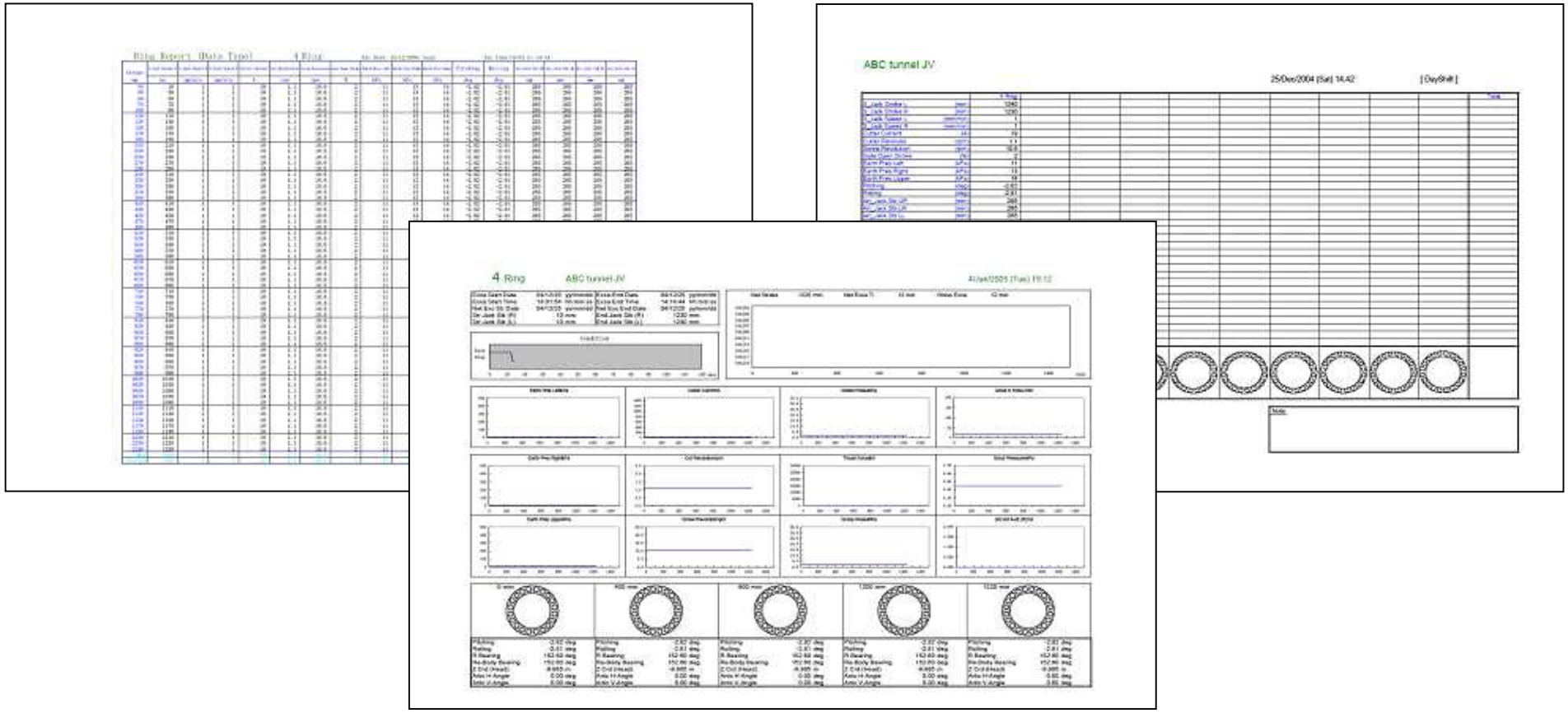

Ring Graph Report

Excavation Ring Data Report	A numeric printout of the ring detail data	A sheet per ring, with print pitch of 20 mm
Ring Graph Report	A graphic printout of the ring detail data	A sheet per ring, with print pitch of 20 mm
Excavation Day Report	A numerical printout of the ring typical data	A sheet per day, up to 10 rings in a pritout

10. Data Utilization

The data on the computer can be used in the other applications.

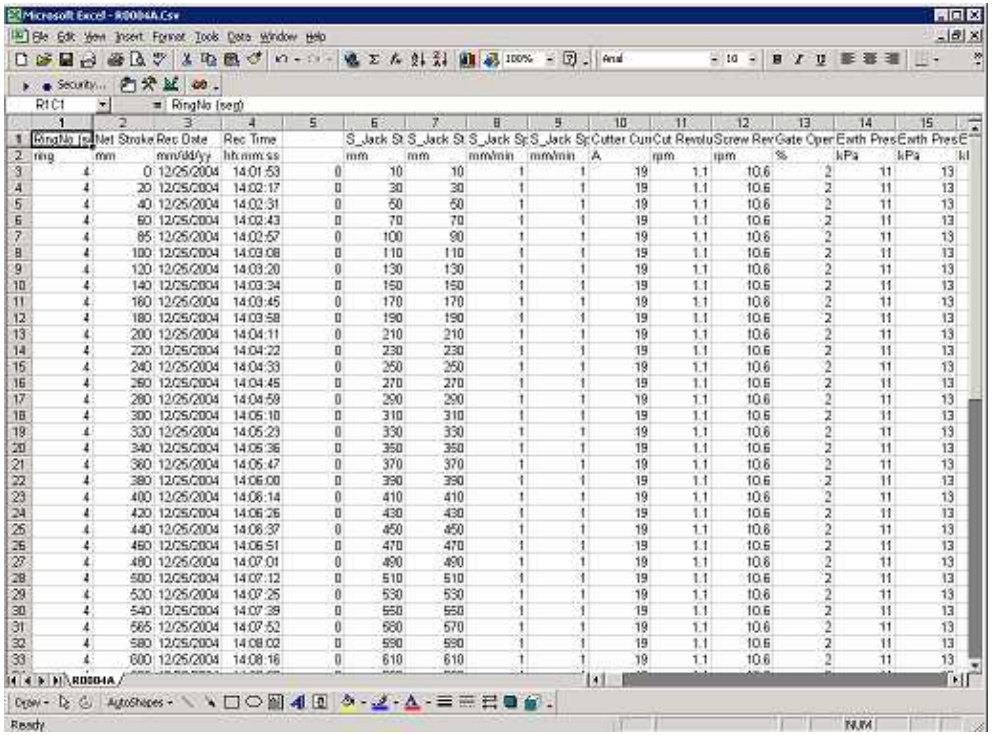

Data useable in Microsoft Excel:

- Ring typical data
- Ring detail data
- Time series data (1 minute)
- ML data

Auto CAD LT (optional)

- Plan alignment file
- Survey point file
- Machine survey file
- Segment survey file

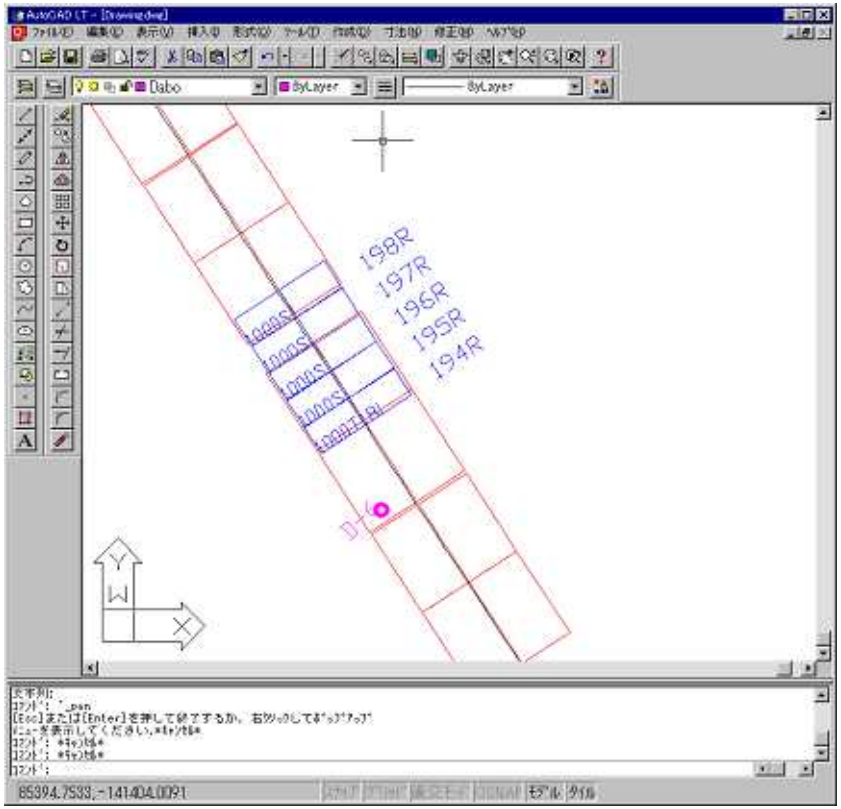

It requires the data conversion software (optional) to convert data for use in AutoCAD LT.

Shield tunneling method

Excavation Management System

ARiGATAYA Ver.3.0

CONTENTS

1. Home Screen On Start-up Page 2
2. Current Status of System Operation Page 3
3. System Operation Mode Page 4
4. Correction of Operation Mode Page 5
5. Screen Access Page 6
6. Functions of Screens on Sub-monitor Page 7

The ARiGATAYA Ver.3.0 System, composed of the software and various associated hardware, treats the measurement values (especially concerned with the measurement hardware) on the premise that they are true and correct. It is, therefore, necessary that the measurement hardware kept in optimum condition is always used.
We assume no responsibility for any damages resulting from the use of the System or for the damages previously informed by us as well as damages, loss, and harm caused to the User.
The copyright of this manual belongs to enzan koubou Co., Ltd. It is strictly prohibited to duplicate, distribute, and disclose the content without our prior approval. Any content of this website may neither be duplicated nor distributed without prior approval.

1. Home Screen On Start-up

Right after the computer starts up, following screens appear on the main and sub monitors.

The ARiGATAYA Excavation Management System, with the control viewer on the left monitor and the subcategory viewer on the right monitor, provides the capability to control the data during operation.

Left: Main monitor

Right: Sub monitor

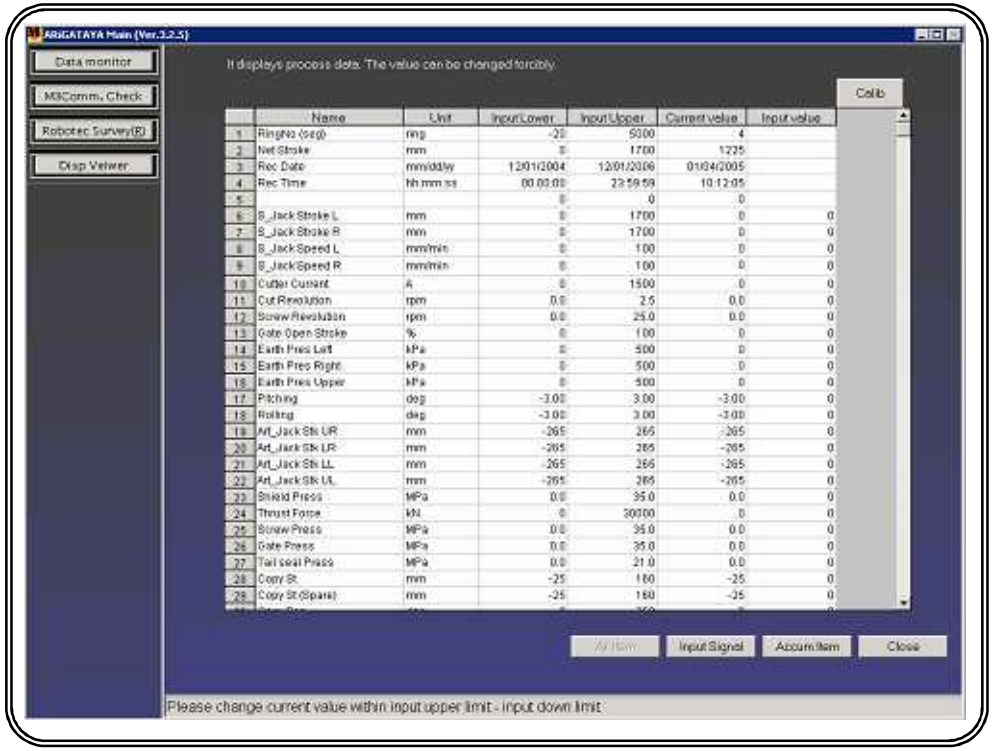

The main monitor is used to control the measure operation and select a subcategory screen that is displayed on the sub monitor.

The control viewer can be switched between two different control screens.

The sub monitor shows various operation screens.

Keyboard

Mouse

2. Current Status of System Operation

The current status of the System operation is shown at the top of the control viewer (main monitor).

The current ring No.
The System automatically counts the ring number.

Clicking the Screen Select button shows the Screen Select Menu.

Following system modes are provided for management in line with the status of the on-site operation.

- Excavation — The shield machine is in operation of excavation.
- Preparation — The shield machine is temporarily halted during excavation for change of the muck steel vehicles or for such a reason.
- Erection — Segment erection is in progress or is complete and preparation for next excavation is under way.

- Net Stroke: Screen Select → System Set → System Information — Net stroke is set through "Average Shield Jack Length" of "TBM relation" therein.
- Monitor Stroke: Excavation stroke starting from zero when the excavation start conditions are fulfilled.

- Excav Start Time — The time when excavation start conditions are fulfilled.
- Excav Fin Time — The time when excavation finish conditions are fulfilled.
- Gross Excav Time — Gross excavation time taken for the current ring.
- Net Excav Time — Net excavation time taken for the current ring.

Use this button to correct discrepancies, if any, between the display and the actual operation in regard to Ring No. and System Mode.

- Excavation

A state that the shield machine is actually in operation of excavation. In general, it is determined with "Cutter rotation" and "Jack push" (and "Screw rotation").

- Excavation mode

A state that the cockpit is given preference for jack operation (i.e. ready for excavation).

- Segment mode

A state that the machine is given preference for jack operation (i.e. erector is operational).

* Normally, "Excavation mode" and "Excavation" are ON at the same time, but are never along with "Segment mode".

- Excav Start Con:

When this display is ON, the System starts ring count upon receipt of <Excav> signal as it determines the excavation has started.The system enters <Excav> mode.

* When this display is OFF, the System does not enter <Excav> mode even if it receives <Excav> signal.

- Excav Fin Con:

When this display is ON, the System starts ring count upon receipt of <Segment mode> signal as it determines the excavation has finished.The system enters <Erect> mode.

* When this display is OFF, the System does not enter <Erect> mode even if it receives <Segment mode> signal.

3. System Operation Mode

The System automatically determines the operation mode using gathered signals and the settings.

Following system modes are provided for management in line with the status of the on-site operation.

[1] Excavation The shield machine is in operation of excavation.
[2] Preparation The shield machine is temporarily halted during excavation for change of the muck steel vehicles or for such a reason.
[3] Erection Segment erection is in progress or is complete and preparation for next excavation is under way.

Following signals are used to determine the mode.

- Excavation
- Excavation mode
- Segment mode
- Net stroke / Net (Monitor) Stroke

Following settings are used to determine the mode.

- Excavation start condition stroke length (mm):

Screen Select → System Set → System Information Setting can be made through "Conditions" therein.

- Excavation finish condition rate of stroke length (%):

Screen Select → System Set → System Information Setting can be made through "Conditions" therein.

- Excavation plan segment type:

Screen Select → Survey → TBM Advance Plan The type is set in the column of "Segment Type" therein.

For the segment types, go to Screen Select → Survey → Seg Type Setting

Excavation start conditions: The conditions are fulfilled when <Excav> signal is received while the operation mode is <Excav> and the net stroke is not more than the "Excavation start condition stroke length".
* Excavation does not start while the net stroke is over the "Excavation start condition stroke length" even if <Excav> signal is received.

Excavation finish conditions: The conditions are fulfilled when <Segment mode> signal is received while the operation mode is <Excav> or <Preparation> and the ratio of the net stroke to the center length of "Excavation plan segment type" is over the "Excavation finish condition rate of stroke length"
* Excavation does not finish while the ratio of the net stroke to the center length of "Excavation plan segment type" is not more than the "Excavation finish condition rate of stroke length"even if <Erect> signal is received.

4. Correction of Operation Mode

If discrepancies between the mode display and the actual operation status have occurred, correct them according to the following procedure.

Carefully follow the instructions below if discrepancies among the display, the actual operation status and the ring No. have occurred.

[1] The System has started next excavation with unsuccessful determination on the excavation start conditions.

If excavation is under way, execute "Excav Start by Force". Note that this quick-fix may not support the excavation finish conditions in some cases. If so, execute "Excav Finish by Force" when excavation on site is complete.

A typical possible cause of the unsuccessful determination is such that the net stroke at the start of excavation has been over the excavation start condition stroke length. Check out the setting. It is incidental when replacing long segment with short one.

[2] with unsuccessful determination on the excavation finish conditions, the display mode remains in <Preparation> although the actual excavation on site is complete.

Execute "Excav Finish by Force". If next excavation on site has not started, check through "TBM Advancing Plan" that the excavation plan segment type has been set and the excavation finish condition rate of net stroke is proper.

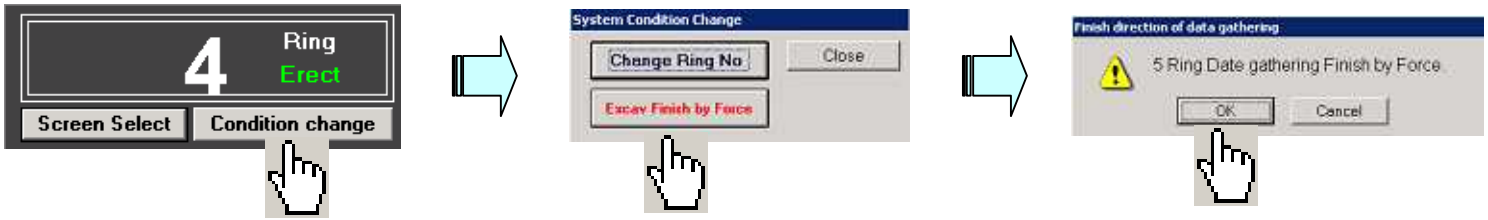

[3] Ring No. is inconsistent.

Execute "Change Ring No.". Note that display of an inconsistent ring No. may have been caused by [1] or [2]. Check it out and remove the cause.

5. Screen Access

Screens are accessible through the Screen Select button.

Click the Screen Select button to show the Screen Select Menu.

Screen Select Menu

Whole Monitoring1: ARiGATAYA Viewer

Whole Monitoring2: ARiGATAYA Viewer

Whole Monitoring3: ARiGATAYA Viewer

[1] Monitoring: ARiGATAYA Kanri

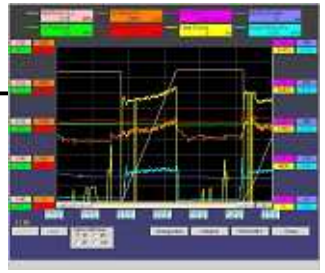

[2] Survey: ARiGATAYA Survey

[3] Maintenance: ARiGATAYA Utility

[4] System Setting: ARiGATAYA Main

6. Functions of Screens on Sub-monitor

The operation screens available on the sub-monitor are as follows.

[1] Monitoring (ARiGATAYA Kanri)	Real time graph	Movements of special items to be watched are graphed in chronological order (5-second intervals).
	Graph (multi-purpose)	Past gathered data are graphed for comparison.
	Trend graph	For specially section to select and show the graph.
	Earth pressure monitor	Monitoring of the earth pressure variation based on the past gathered data.
	Grouting monitor	Monitoring of the grouting fill volume based on the past gathered data.
	Additive monitor	Monitoring of the additive pouring volume based on the past gathered data.
	Foam monitor	Monitoring of the foam pouring volume based on the past gathered data.
	Muck volume monitor	Monitoring of the muck volume based on the past gathered data.
[2] Survey (ARiGATAYA Survey)	Plan alignment setting	Setting of the plan alignment.
	Survey point setting	Setting of the survey point (dowel).
	TBM survey	Inputting and calculation of the TBM survey results.
	Segment survey	Inputting and calculation of the segment survey results.
	Segment build plan	The meander correction plan is made up through a simulation of segment building.
	TBM Advancing plan	Calculation of the target bearing and target height.
	Alignment graph	The plan alignment and the survey results are displayed on the alignment.
	As-build graph	A scroll-like As-build graph is generated.
	Segment type setting	Setting of data of the segment to be used.
	Segment position calculation	The segment face-bearing and face-pitch are calculated for use in the segment building plan.
[3] Maintenance (ARiGATAYA Utility)	System information	Setting of the System parameters.
	Loop maintenance	Setting of the parameters for each gathering item.
	Ring detail file	Maintenance of the ring detail data can be done.
	Ring typical file	Maintenance of the ring typical data can be done.
	Time series file	Maintenance of the time series data can be done.
	Daily ring file	Maintenance of the daily excavation ring data can be done.
	Survey point file	Maintenance of the survey point setting data can be done.
	TBM survey file	Maintenance of the TBM survey data and the calculation results can be done.
	Segment survey file	Maintenance of the segment survey data and the calculation results can be done.
	Document definition	Document print items are defined.
	Operation history	The operation history of the System can be observed.
[4] System setting (ARiGATAYA Main)	Data monitor	The list of the present values is displayed.
	Communication check	Monitoring of the communication with the ARiGATAYA interface.

Shield tunneling method

Excavation Management System

ARiGATAYA Ver.3.0

CONTENTS

1. Monitor Screen Switchover Page 2
2. Standard Monitor Screen (1)~(3) Page 3~5
3. Alarm Display, etc. Page 6

The ARiGATAYA Ver.3.0 System, composed of the software and various associated hardware, treats the measurement values (especially concerned with the measurement hardware) on the premise that they are true and correct. It is, therefore, necessary that the measurement hardware kept in optimum condition is always used.
We assume no responsibility for any damages resulting from the use of the System or for the damages previously informed by us as well as damages, loss, and harm caused to the User.
The copyright of this manual belongs to enzan koubou Co., Ltd. It is strictly prohibited to duplicate, distribute, and disclose the content without our prior approval. Any content of this website may neither be duplicated nor distributed without prior approval.

1. Monitor Screen Switchover

Measure data can be monitored in three different monitor screens by switchover operation.

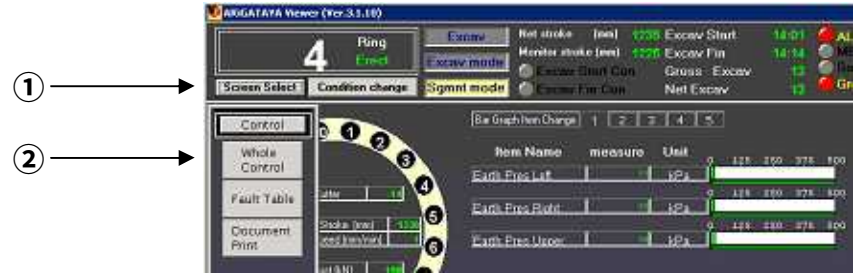

The screen to display the data in respective bar graphs and line graphs.

The screen to monitor the entire data and the alignment data.

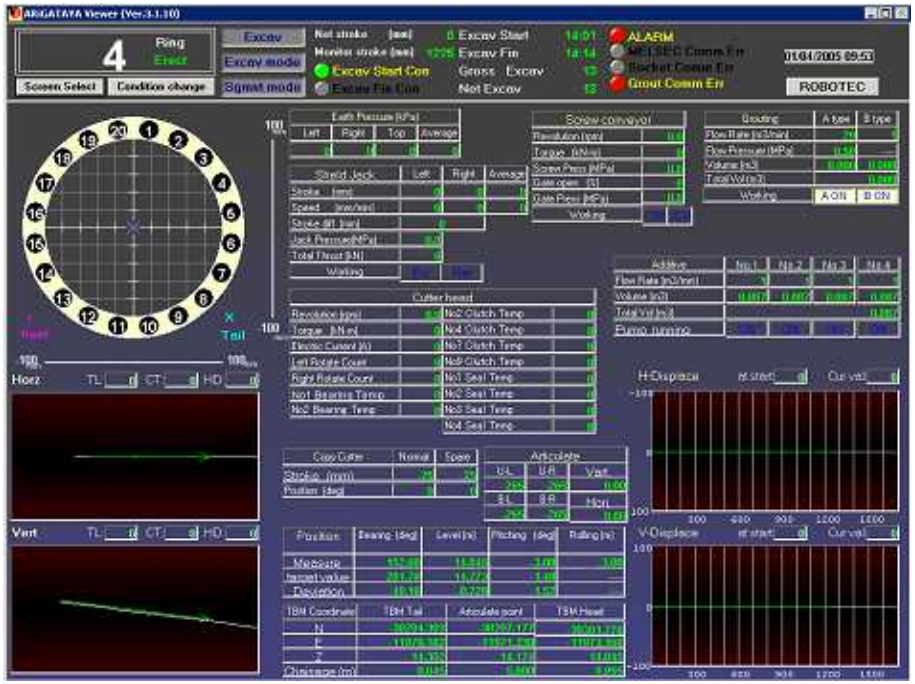

Operation:

① Click **Screen Select**

② Click Whole Control after the Screen Select window is displayed.

The three screens are displayed one after another.

2. Standard Monitor Screen (1)

On the standard monitor screen, the gathered data can be displayed in numeric and bar-graph forms.
In addition, the stroke data of excavation in progress can be displayed in line-graph form.

A data registration capacity equivalent to five pages is available for each of bar graph and line graph.

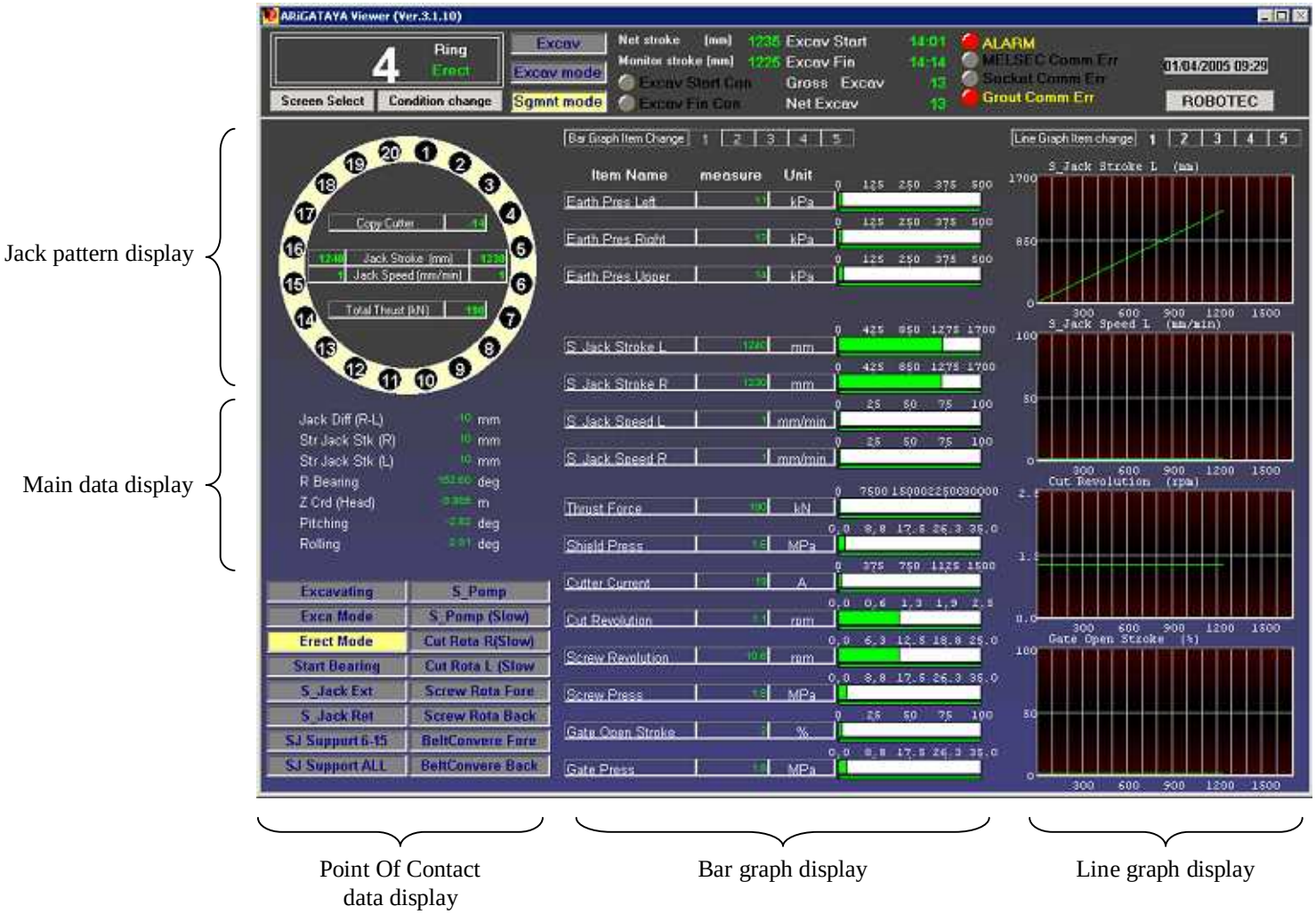

2. Standard Monitor Screen (2)

Change of display item

[1] Changing settings of bar graph

Edit Setting Screen

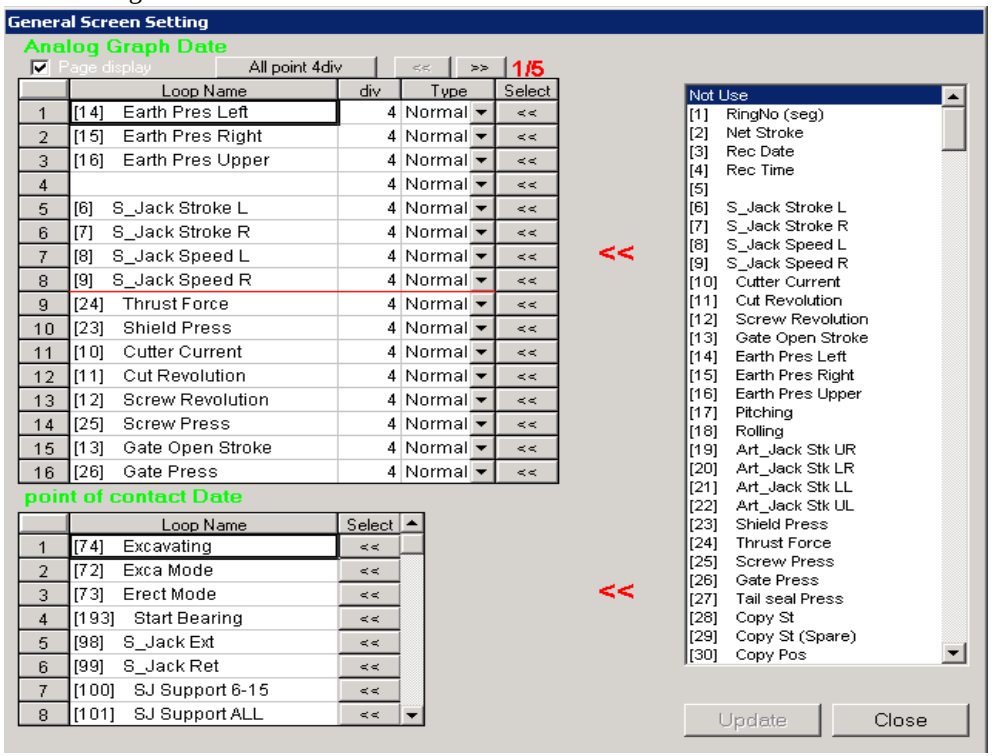

Select an item in the right list and click << of the desired place for addition or revision.

Analog data settings:

<< >> 1/5 Selection of Register page

Division: Setting of graph segment numbers. All point 4div button to set all the items into four divisions.

Type: Regular Graph in a left-to-right fashion
Center Graph in a center-to-either side fashion (pitching, rolling, etc.)
Point of contact Display of ON/OFF signal

Point Of Contact data:

1 to 8 Items in the left column
9 to 16 Items in the right column

Click Update button after the setting is complete.

* The items displayed in the bar graph on the bottom of the monitor screen for operation are those set to 9 to 16 in page 5/5.

* **Change of graph scale**:

Select Screen Select → System Set → Loop Maintenance then,

change the scale with "Display Upper Limit" and "Display Lower Limit".

2. Standard Monitor Screen (3)

Change of display item

[2] Changing settings of line graph

Edit Setting Screen

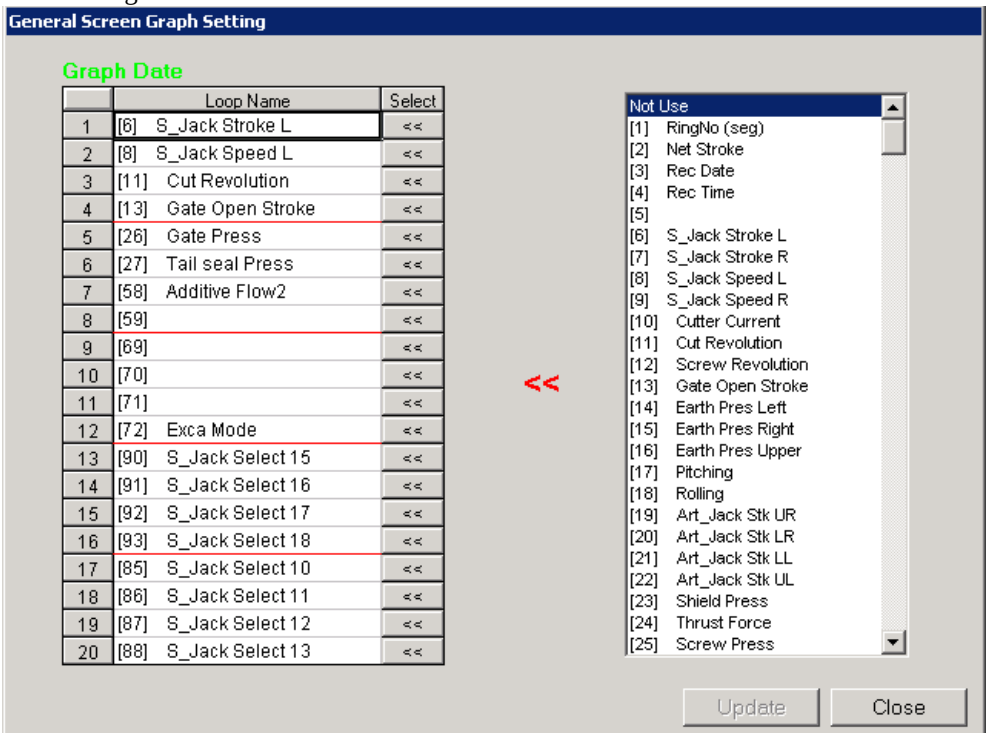

Select an item in the right list and click << of the desired place for addition or revision.

Every four items from the top share one page.

Click Update button after the setting is complete.

* **Change of graph scale**:

Select **Screen Select** → System Set → Loop Maintenance then,

change the scale with "Display Upper Limit" and "Display Lower Limit".

3. Display of Alarm and Display of Alarm History

Select Fault Table or double click show the alarm history view.

If over the alarm setting value then show the alarm.

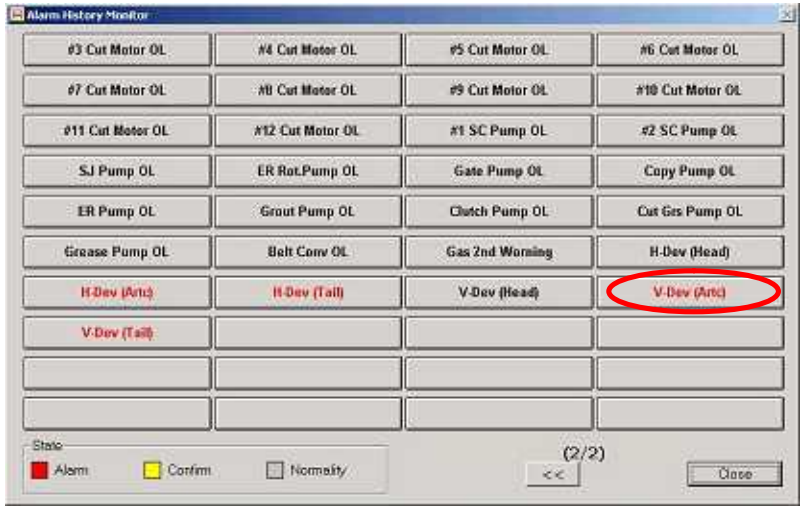

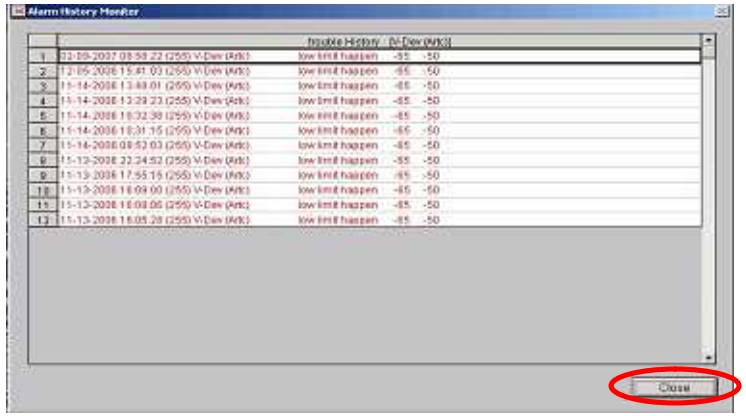

Double click the red item will show above view.
Press Close , return to the alarm history view and that item become yellow.

this become yellow also.

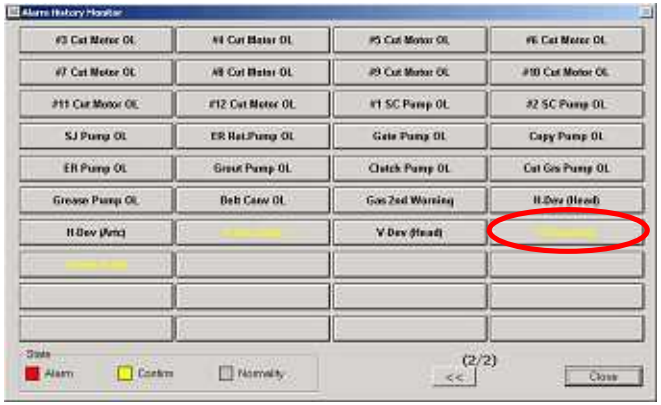

RED : alarm : not confirm yet.
YELLOW : alarm: confirmed

: the meaning of pages on and after page 2 .

Shield tunneling method

Excavation Management System

ARiGATAYA Ver.3.0

CONTENTS

About Management Items	Page 2
1. Real Time Graph	Page 3
2. Graph (Multi purpose)	Page 4
3. Trend Graph (1)~(3)	Page 5~7
4. Management Screen	Page 8

The ARiGATAYA Ver.3.0 System, composed of the software and various associated hardware, treats the measurement values (especially concerned with the measurement hardware) on the premise that they are true and correct. It is, therefore, necessary that the measurement hardware kept in optimum condition is always used.
We assume no responsibility for any damages resulting from the use of the System or for the damages previously informed by us as well as damages, loss, and harm caused to the User.
The copyright of this manual belongs to enzan koubou Co., Ltd. It is strictly prohibited to duplicate, distribute, and disclose the content without our prior approval. Any content of this website may neither be duplicated nor distributed without prior approval.

About Management Items

Important items that should be specially controlled during shield tunneling operation are selected for management purpose.

Management Function Menu

- Real Time Graph → Movements of special items to be watched are graphed in chronological order (5-second intervals).
- Graph → Past gathered data are graphed for comparison.
- Earth Pressure → Monitoring of the earth pressure variation based on the past gathered data.
- Muck volume → Monitoring of the muck volume based on the past gathered data.
- Grouting Monitor → Monitoring of the grouting fill volume based on the past gathered data.
- Additive Monitor → Monitoring of the additive pouring volume based on the past gathered data.
- TrendGraph → For specially section to select and show the graph.

1. Real Time Graph

The time series data are graphed and displayed (non-periodical update).

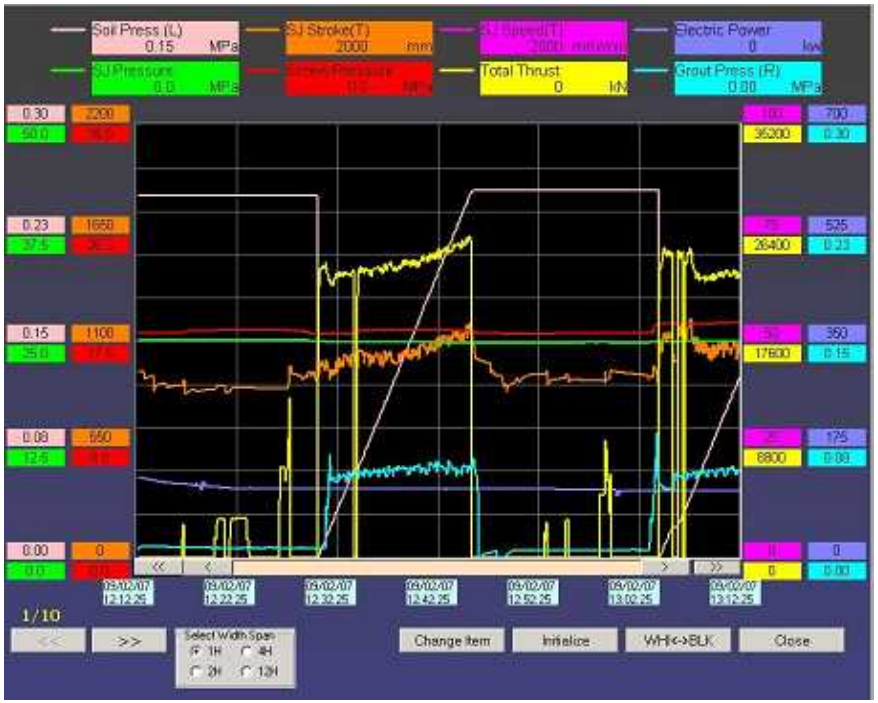

When Soil Press.(L) 0.15 MPa is clicked, its color goes off (like this Jack Speed Avg mm/min) and its corresponding graph hides away concurrently.

It may be helpful to hide either graph where two graphs illegibly overlap in display.

WHI<->BLK button is used to change the background color between black and white.

- **How to change Graphic Scale**:

  [1] Change of the initial value

  The graphic scale set by clicking Initialize can be changed.

  Go to **Screen Select** → System Set → Loop Maintenance

  and change the value using "Upper Limit" and "Lower Limit" therein.

  [2] Temporary change

  Double-click 999.999 located below each graph button and enter a new figure.

  In the alternative, double-click the button, and then, move the mouse pointer over/along the graph. The figure in display varies as the pointer moves. Click to determine when a preferable figure appears.

- **How to see graph data value:**

  Move the mouse pointer over/along the graph. The data value of the graph pointed by the mouse pointer is shown on the status bar located at the bottom of the screen.

- **How to change display item:**

  Click Change Item to show the window.

  Select items to be displayed.

  Then, click << .

  Click Change to finish complete.

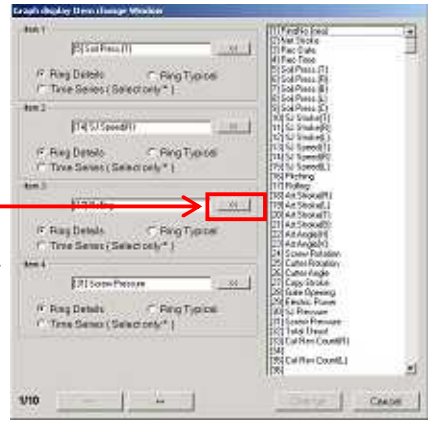

- **How to change the time zone in display:**

You can select the time width in this display.

<< 4-hour-back button < 1-hour-back button

>> 4-hour-forward button > 1-hour-forward button

(If select the 12H, << or >> then change by each 12H.)

- **Change the page of item.**

  Max 10 page 80 items.

This is to change page.

2. Graph (Multi-purpose)

The screen displays graphs of the past gathered data.

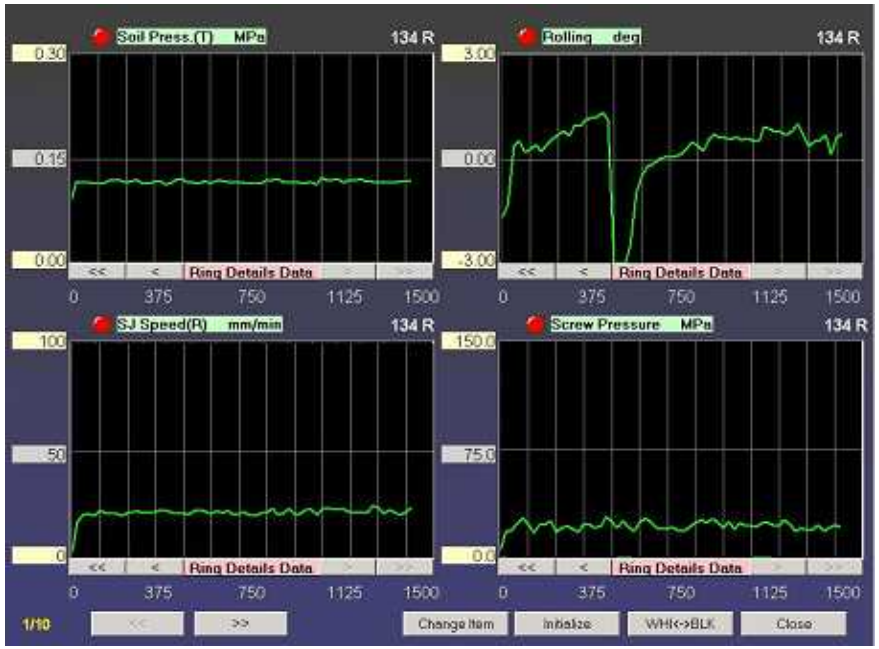

- **How to change display item:**

Click Change Item to show the window.

Select items to be displayed.

Then, click << .

Click Change to finish complete.

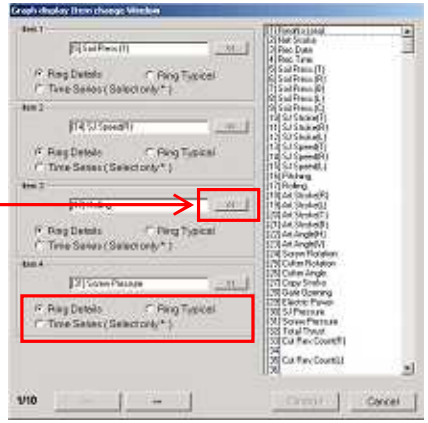

- **Three types of data can be graphed and displayed:**
  - Ring detail data
  - Ring typical data
  - Time series data (1-minute intervals)

Operating buttons for Ring detail data:

<	1-ring-back	<<	10-ring-back
>	1-ring-forward	>>	10-ring-forward

Operating buttons for Ring typical data:

<	100-ring-back	<<	50-ring-back
>	100-ring-forward	>>	50-ring-forward

Operating buttons for Time series data:

<	1-hour-back	<<	4-hour-back
>	1-hour-forward	>>	4-hour-forward

- **How to see graph data value:**

Move the mouse pointer over/along the graph. The data value of the graph pointed by the mouse pointer is shown on the status bar located at the bottom of the screen.

- **Change the page of item.**

Max 10 page 80 items.

1/10 << >> This is to change page.

3. Trend Graph (1)

For specially section to select and show the graph. The item can be choice and have 10 pages for show out.

The data all come form the recording data.

View1:Segment section.

Max: The max. value in graph.

Min: The min. value in graph.

Avg.: The avg. value in graph.

Current: The current value (white line).

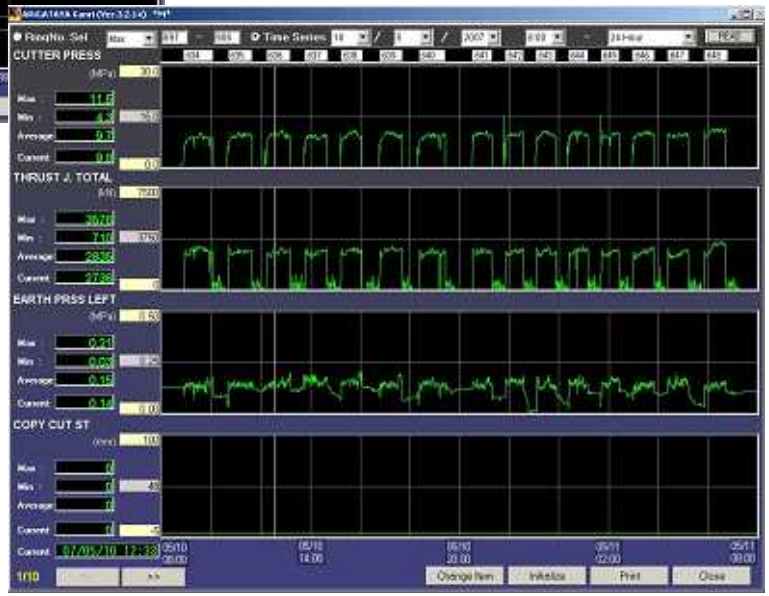

View2:Time section.

Change the graph item.

Initialize.

Print out the graph.

Close the graph.

Change the pages.

3. Trend Graph (2)

○ How to use

Select the segment section or time section for show the graph.

○ Select the segment section.

Choice the Max. Min. Avg. which one for representative of segment.
And select the range of segment.

※ After start excavation 100mm and before end excavation 100mm is not include.

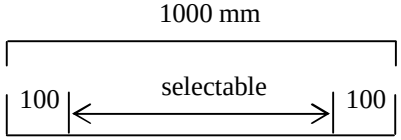

○ Select the time section.

Select the start time and date.
Time scale: In 1Day 1H, 2H 4H, 8H, 12H, 24H, 2Day, 3Day, 4Day, 5Day, 6Day, 7Day.

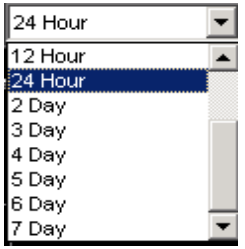

After select the above , click READ for reading data.

○ How to change the range

Double click then input the Max. and Min. value.

Also you can move the mouse for setting the current value.

○ How to change the item

Click Change Item , then show the follow view.

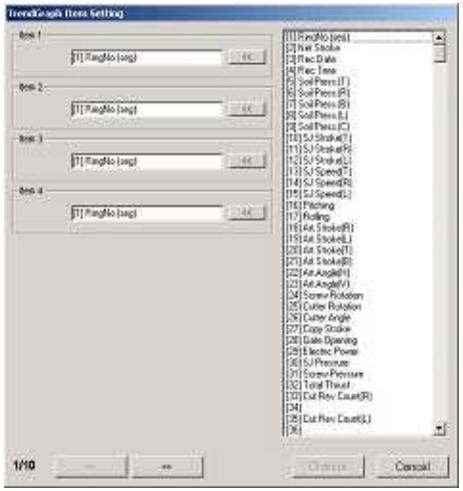

From the right to choice the item for show out.
press << for select.

3. Trend Graph (3)

○ Print

Click this Print for print the graph out.

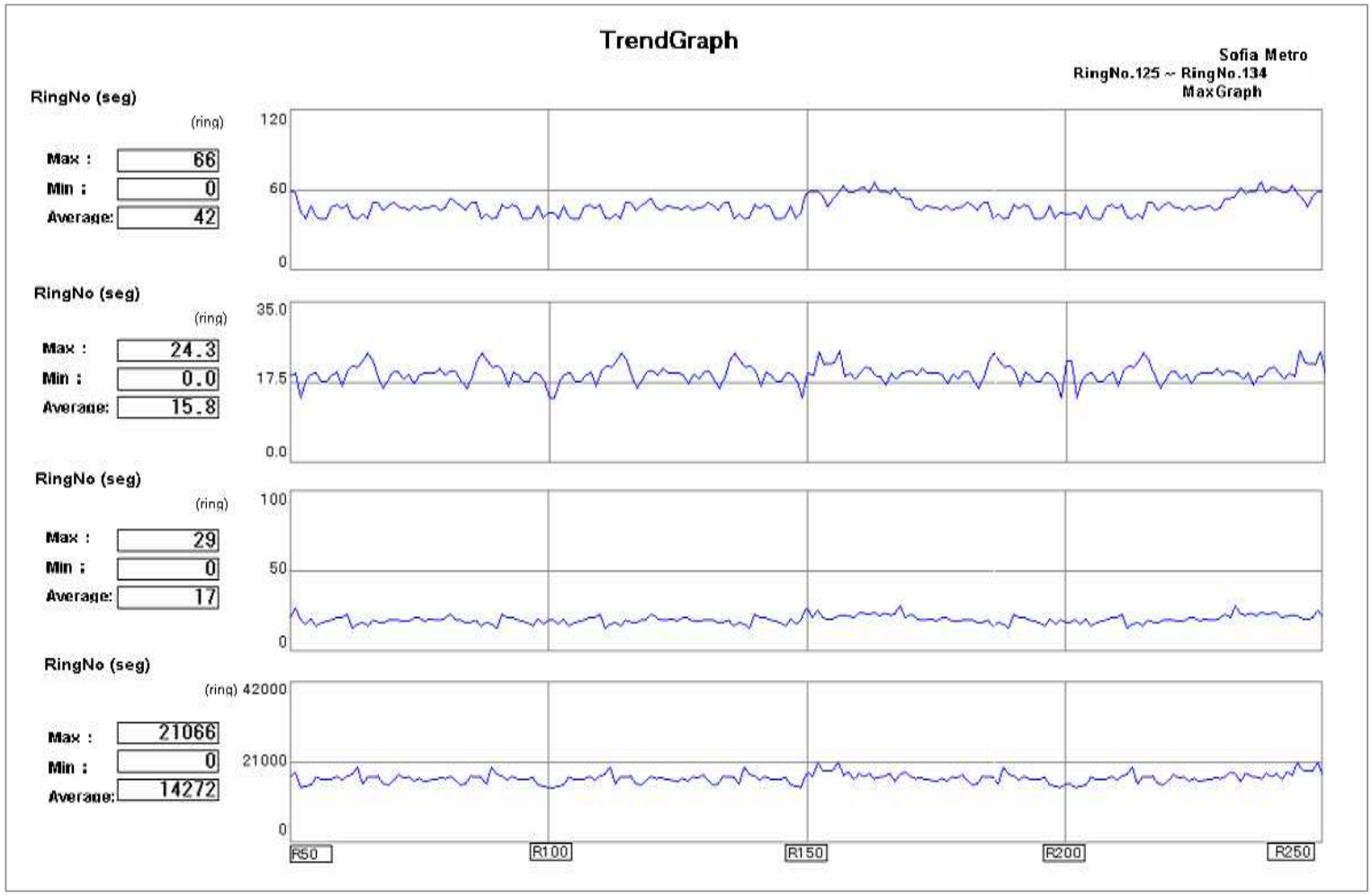

4. Management Screen

The Management screen (each of Earth pressure, Grouting, Additive, Muck volume, etc.) facilitates monitoring of whether the current ring data stay within the control range or not, using the control values determined based on the standard deviation found from the past gathered data.

Earth Pressure control

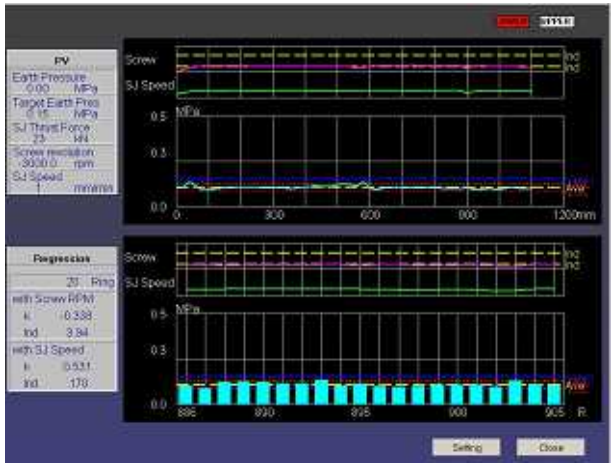

Muck control

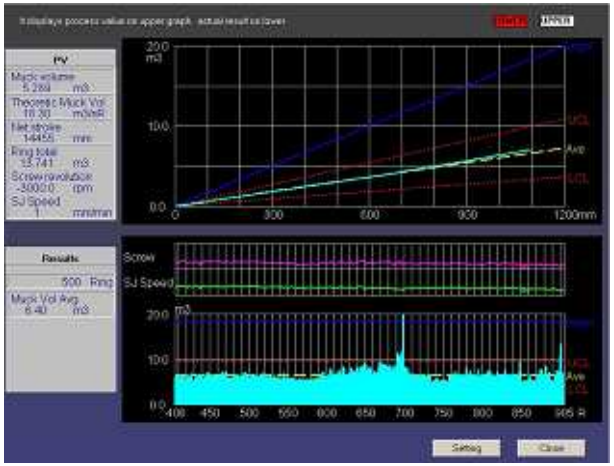

When the current value is larger than the UCL (Upper Control Limit) or lower than the LCL (Lower Control Limit), the color of UPPER or LOWER changes to red.

Setting is used to set Regression Ring Number and the like.

Grouting control

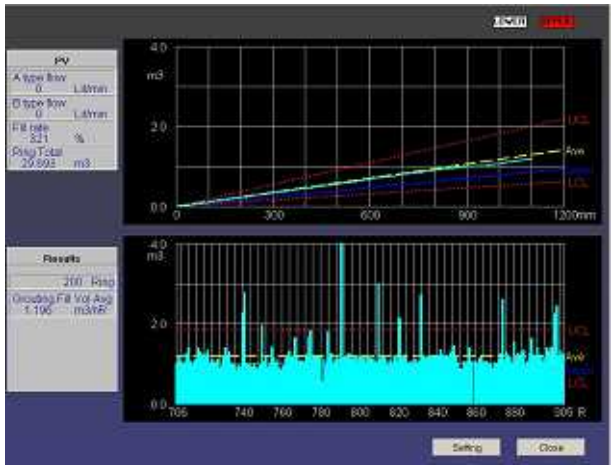

Additive control

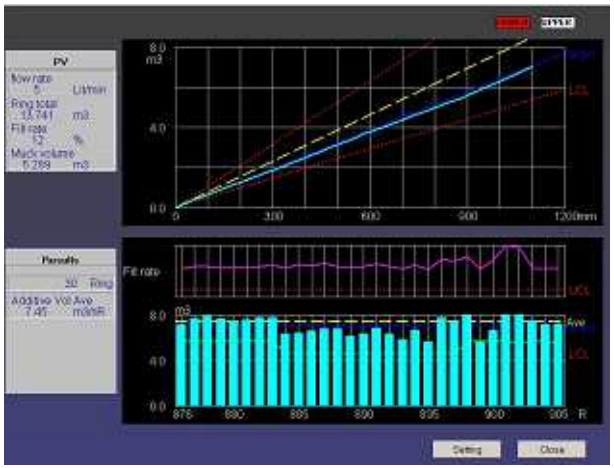

Shield tunneling method

Excavation Management System

ARiGATAYA Ver.3.0

CONTENTS

Summary (Alignment Management-Related)	Page 2
Type of Shield Machine Position Measure	Page 3
1. Setting Plan Alignment (1)~(4)	Page 4~7
2. Survey Point Setting (1)~(2)	Page 8~9
3-a. Machine Survey (Staff Method (1)~(2))	Page 10~11
Machine Survey (common to all system)	Page 12
3-b. Machine Survey (Mirror Method (1)~(2))	Page 13~14
3-c. Machine Survey (Mirror & Level Method)	Page 14
Machine Survey (Mirror Method, Mirror & Level Method)	Page 16
Considerations of TBM Survey Results	Page 17
4-a. Segment Survey (Single point (1)~(2))	Page 18~19
4-b. Segment Survey (All point (1)~(3))	Page 10~22
5. Segment Building Plan (1)~(5)	Page 23~27
6. TBM Advancing Plan (1)~(6)	Page 28~33
7. As-Build Graph	Page 34
8. Alignment Graph (1)~(2)	Page 35~36
9. Segment Type Setting	Page 37
10. Calculate the Segment Position and Face (Only for ROBOTEC site.)	Page 38
11. Setting the Target Relative Position (1)~(2)	Page 39~40

The ARiGATAYA Ver.3.0 System, composed of the software and various associated hardware, treats the measurement values (especially concerned with the measurement hardware) on the premise that they are true and correct. It is, therefore, necessary that the measurement hardware kept in optimum condition is always used.
We assume no responsibility for any damages resulting from the use of the System or for the damages previously informed by us as well as damages, loss, and harm caused to the User.
The copyright of this manual belongs to enzan koubou Co., Ltd. It is strictly prohibited to duplicate, distribute, and disclose the content without our prior approval. Any content of this website may neither be duplicated nor distributed without prior approval.

Summary (Alignment Management-Related)

1. Alignment Setting — Setting of the plan alignment that becomes the basis for the alignment management.
2. Point Setting — Management of the survey point coordinate.

3. By entering the shield machine position survey results, the shield machine position (coordinate) and the shift amount from the plan alignment are calculated.
   - TBM Survey — a. Staff Method : The distance from the centers of and the distance between two staffs on the identical collimation line are measured.
   - TBM Survey(Mirror) — b. Mirror Method : Measurement is made using two mirrors fixed in the shield machine.
   - TBM Surv(Mrr Lvl) — c. Mirror & Level Method : Not using Level Survey, it is calculated only from the prism position.

4. By entering the segment completed amount survey results, the segment position (coordinate) and the shift amount from the plan alignment are calculated.
   - Seg Srv(one point) — a. One point survey : The distance from the segment center on a line is measured.
   - Seg Srv(All point) — b. All point survey : Measurement is made using any mirrors attached to staffs.

5. Seg Build plan — By determining the type and key position of the subsequent segment building, the shift amount is calculated.
6. TBM Advance Plan — Front-Bd Brg, Head level, and Pitching of the subsequent excavation are calculated.
7. As-build Graph — Deviation graphs of TBM survey, Segment survey, and Automatic survey are displayed with the plan alignment as the center line.
8. Alignment Graph — Locus charts of Survey point, TBM survey, Segment survey, and Automatic survey are displayed against the plan alignment.
9. Seg Type Setting — Setting of information of the segment to be used.
10. Seg Pos Calc — Calculate the segment position and face. (Only for ROBOTEC site.)

Type of Shield Machine Position Measure

There are two types of Shield machine position measure.

1) Manual survey

A TBM survey that is artificially carried out in the tunnel using survey instruments.

2) Automatic survey

Total Station : The system that automatically carries out survey as well as supplementing the artificial survey, always tracking the target of the excavation machine during excavation.

* Note that the alignment management data (Plan alignment, etc.) have to be determined and uploaded to the system before using the above functions.

1. Setting of Plan Alignment (1)

Settings in terms of horizontal and vertical planes are required to determine the plan alignment.
The plan alignment is used as the benchmark for any of the alignment management data.

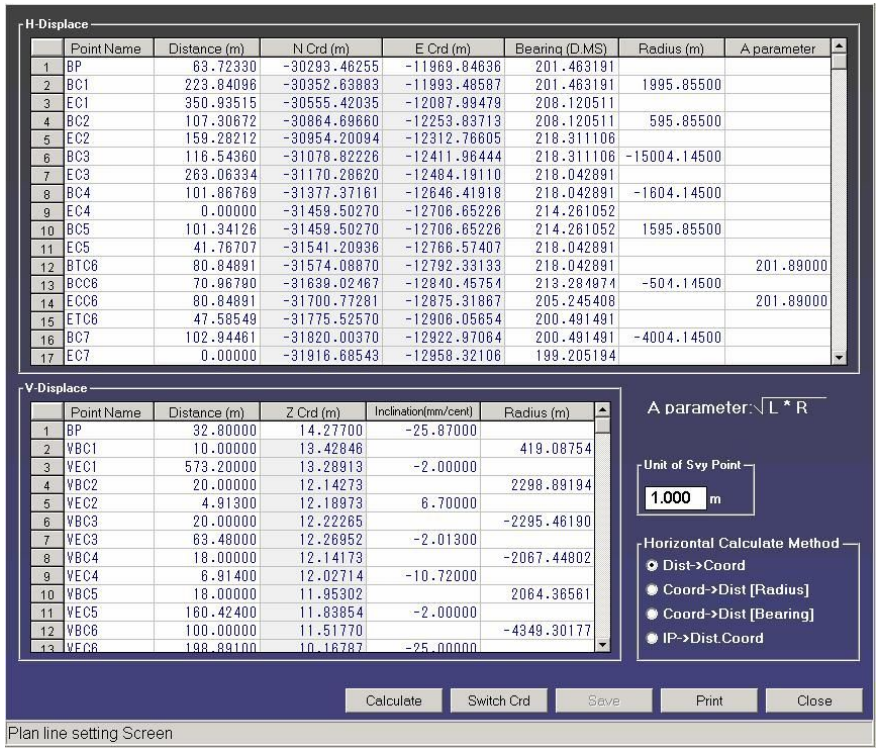

There are four methods to set the horizontal plane coordinate.

[1] Distance → Coordinate
It is calculated from the interval distance and the curve radius of a straight line and curve using the start point coordinate and start point Brg as a reference.

[2] Coordinate → Distance [Radius]
It is calculated from the coordinate and the curve radius of each of BC point and EC point.

[3] Coordinate → Distance [Bearing]
It is calculated as with [2], but using the start Brg as a reference.

[4] IP Coordinate → Distance, Coordinate
It is calculated from the coordinate and the curve radius of each IP.

The determined plan alignment is divided into segments of the specified unit of survey point for management purpose.

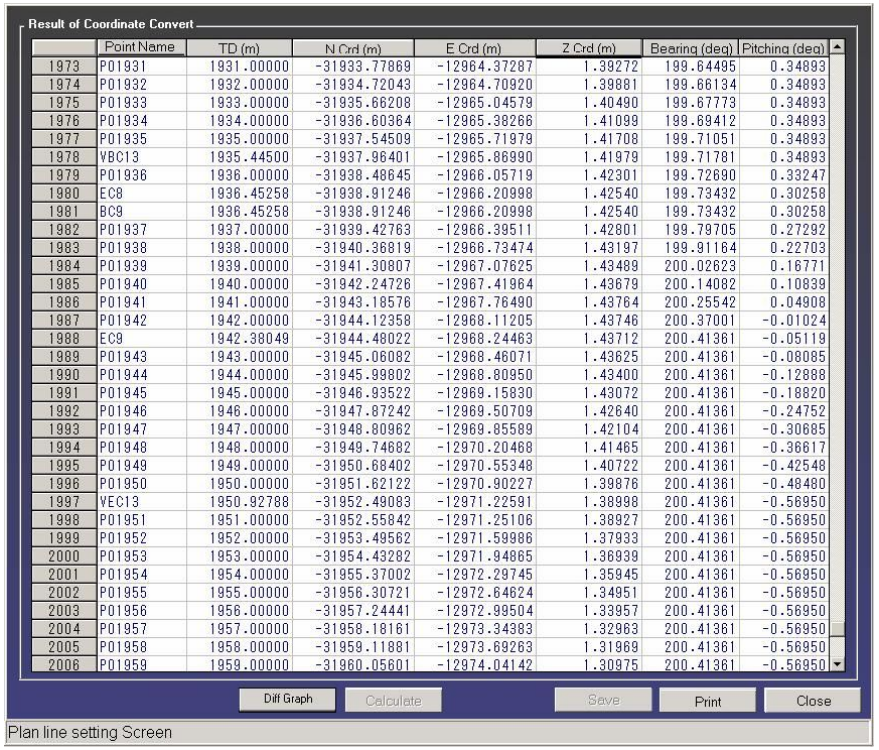

1. Setting of Plan Alignment (2)

For checking the alignment, this graph can compare where is different of coordinate.
According to this graph you can find the big mistake and correct it.

How to use

Diff Graph Click this one then show the different of coordinate.

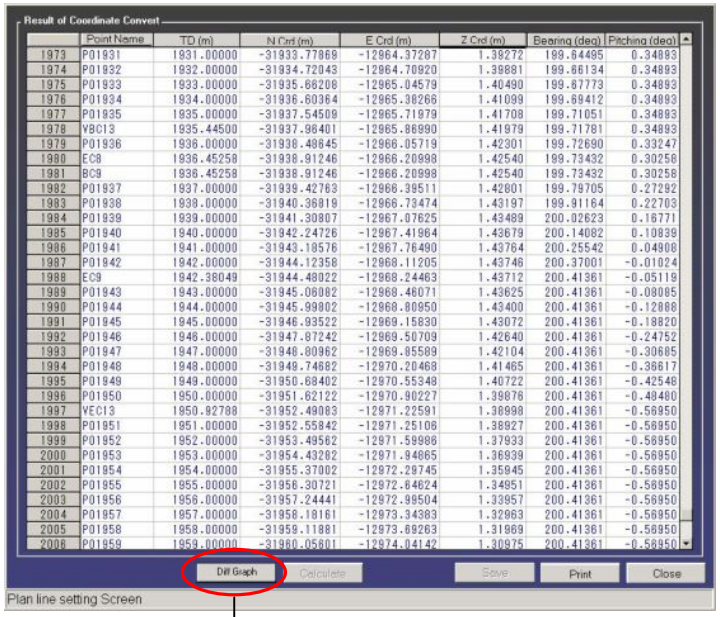

1. Setting of Plan Alignment (3)

1) Plane coordinate system (setting based on interval distance)

[1] Start point coordinate (X, Y)

[2] Start bearing

[3] interval distance of a continuing straight line / curve

[4] Radius of curve

[5] Coordinate of each survey point (BC*n*, Ec*n*) (for result check)

[6] Coordinate of reached point (X, Y)

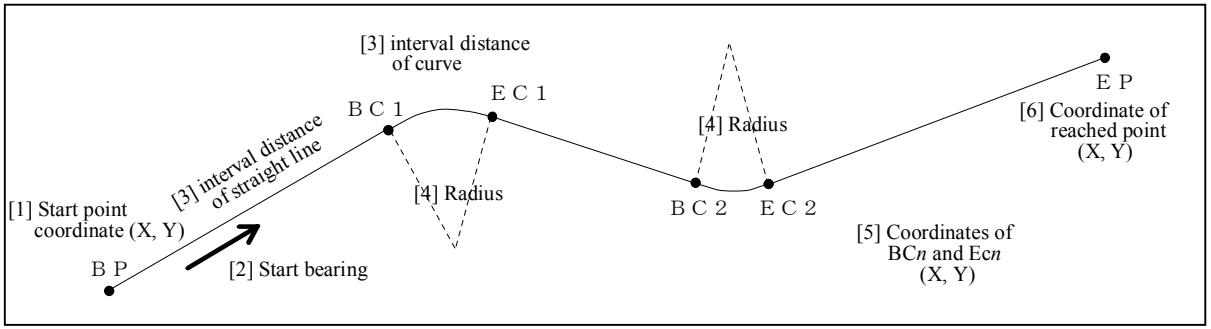

2) Plane coordinate system (setting based on I.P. coordinate)

[1] Start point coordinate (X, Y)

[2] Coordinate of each IP (X, Y)

[3] Radius of curve

[4] Coordinate of each survey point (BC*n*, EC*n*) (for result check)

[5] Coordinate of reached point (X, Y)

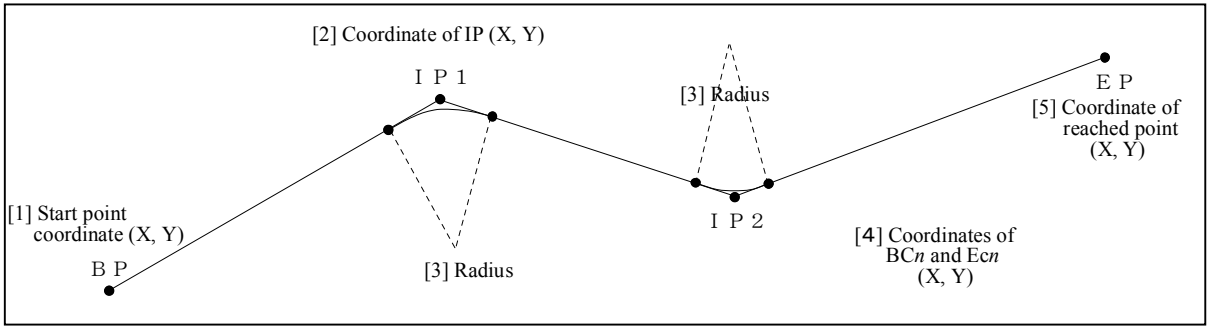

3) Vertical coordinate system

[1] Height of Start point

[2] Inclination of an interval with a single incline

[3] Radius of vertical curve

[4] Horizontal distance of each interval

[5] Height of reached point

* The coordinate shall be input to four decimal places (0.0001m = 0.1mm) if possible.

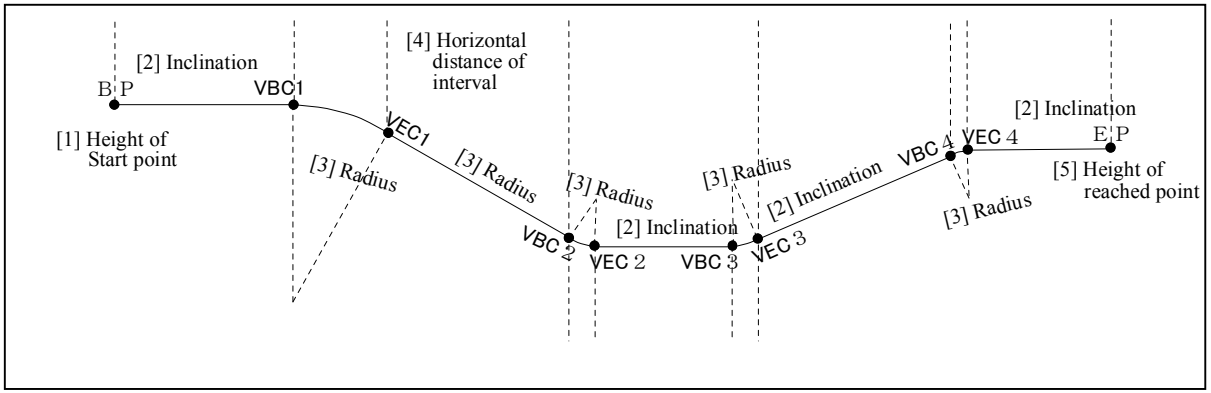

1. Setting of Plan Alignment (4)

Management of Coordinate

The determined plan alignment is divided to segments of a specified length (0.5 m as standard) for management purpose.

Therefore, every segment, regardless of straight or curved, is treated the same.

Note that points on the curved line are determined based on the arc length. Therefore, the chord length of a curved segment (point-to-point linear distance) is always less than 0.5 m.

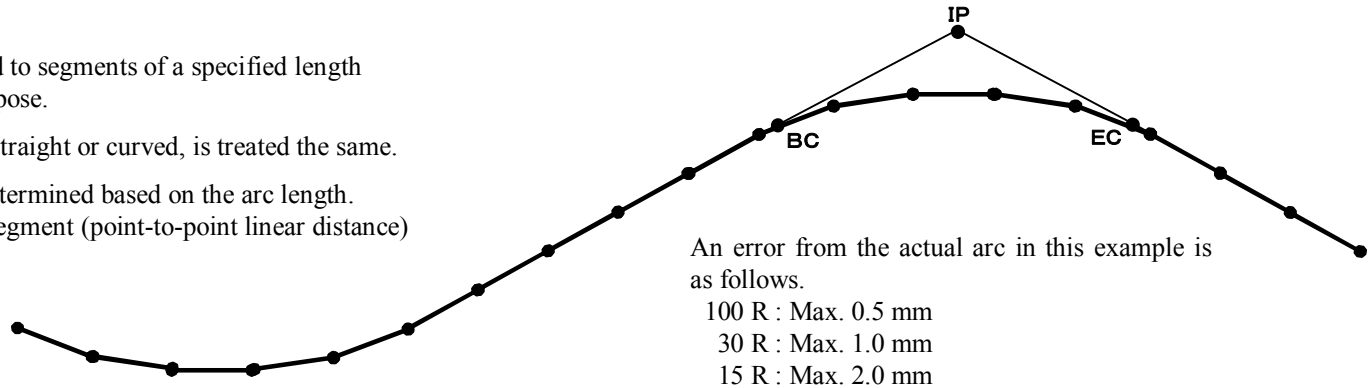

An error from the actual arc in this example is as follows.

100 R : Max. 0.5 mm
30 R : Max. 1.0 mm
15 R : Max. 2.0 mm

Deviation from Plan Alignment

Two points nearest to a given coordinate are selected out of the determined points. The distance between the given coordinate and the intersection point, at which the line from the coordinate and the linear line between the selected two points are at right angles to each other, is found.

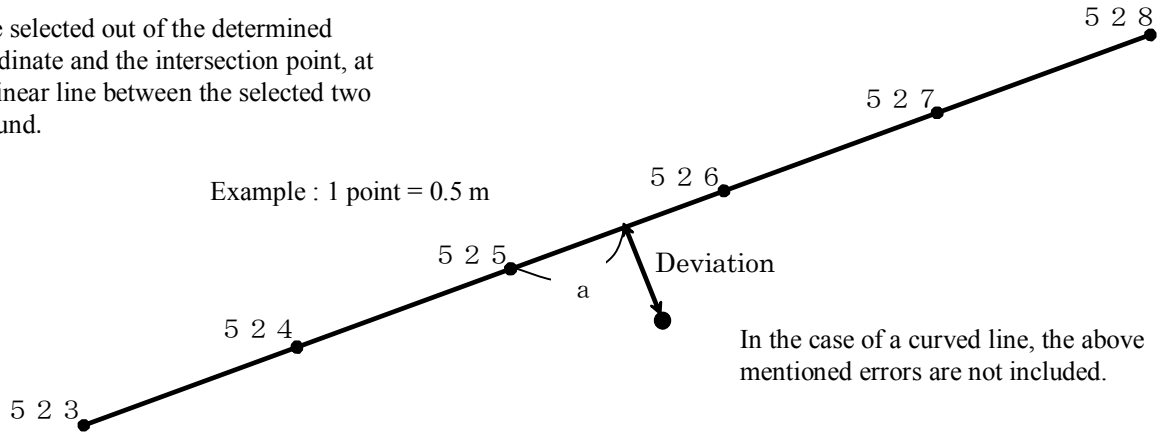

Example : 1 point = 0.5 m

In the case of a curved line, the above mentioned errors are not included.

Cumulative Distance from Start Point

In the above example, if the internal points are searched from the coordinate point that is away from the planned line, the distance to 525 will be 525 × 0.5 m ＝ 262.5 m.

The cumulative distance from the start point is found by adding the distance [a] to it.

2. Survey Point Setting (1) - Survey Schematic Diagram

Procedure for Setting Horizontal Survey Point

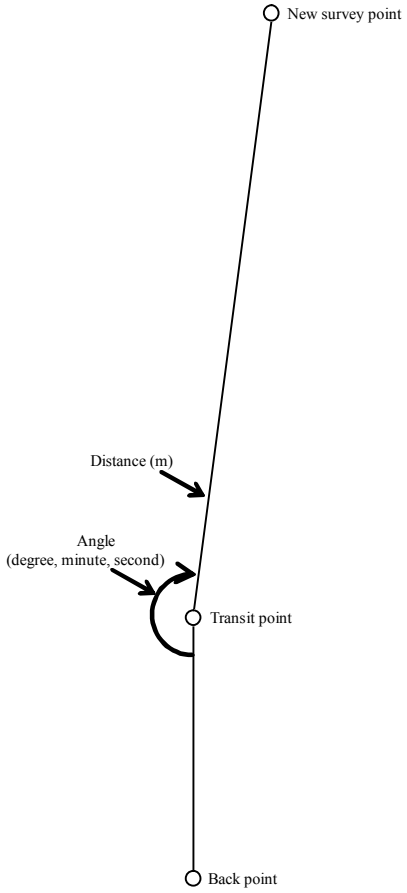

At least two survey points are needed to obtain a new survey point.

1. Using predetermined survey points
   [1] Select points out of the predetermined survey points
   [2] Determine the position of a new survey point.
   [3] Measure the angle (degree, minute, second) formed by Back point, Transit point, and the new point.
   [4] Measure the distance between Transit point and the new survey point (horizontal distance in meter).

2. No predetermined survey points available
   [1] Directly register survey point coordinates that are used as Back point and Transit point.

2. Survey Point Setting (2)

Point Setting Survey Point Setting Screen

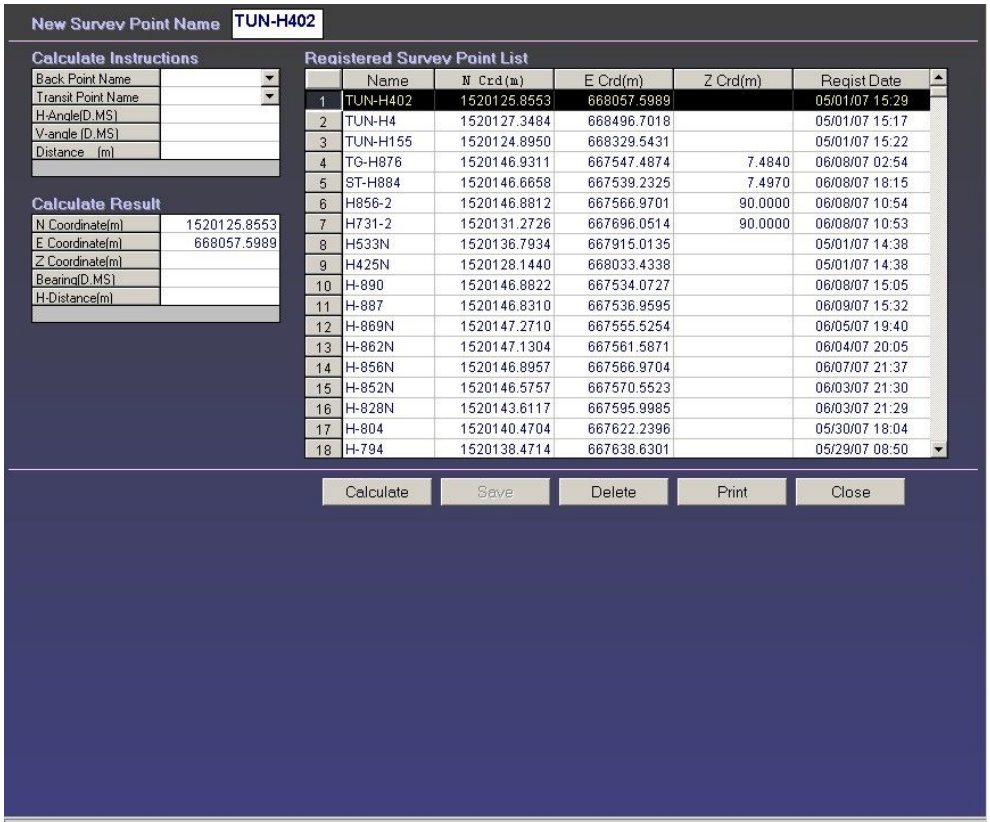

Survey Point Setting Screen

Name of survey point	Any name (not more than eight single-space alphanumeric characters and symbols)
Calculation instructions	To be used for setting a new survey point using predetermined survey points.
Calculation results	To display the calculated survey point coordinate. If the survey point coordinate is already known, enter the result directly.
List of registered survey points	A survey point not provided in the list can not be used when entering the survey result.

[Input Procedure]

1. The survey point coordinate is already known

[1] Input the survey point name.
(not more than eight single-space alphanumeric characters and symbols)

[2] Input numbers in X and Y coordinates of Calculation Results
(Brng and horizontal distance are not required).

[3] Click Save button to add it in the list of registered survey points
(Maximum 512 points).

2. A new survey point is calculated using predetermined survey points

[1] Input the survey point name.
(not more than eight single-space alphanumeric characters and symbols)

[2] Select Back point name and Transit point name by clicking ▼ at Calculation Instructions. Only those given in the list of registered survey points are available for selection.

[3] Input the angle (D, MS), the V-angle (D, MS; to be "90" for horizontal length), and the slope length (to be "horizontal length" if V-angle is 90) and then, click Calculate .

[4] If the numbers shown in Calculation Results are correct, click Save to add it in the list of registered survey points.

3-a. Machine Survey (1) [Staff Method] - Survey Schematic Diagram

Outline of Plane Surveying

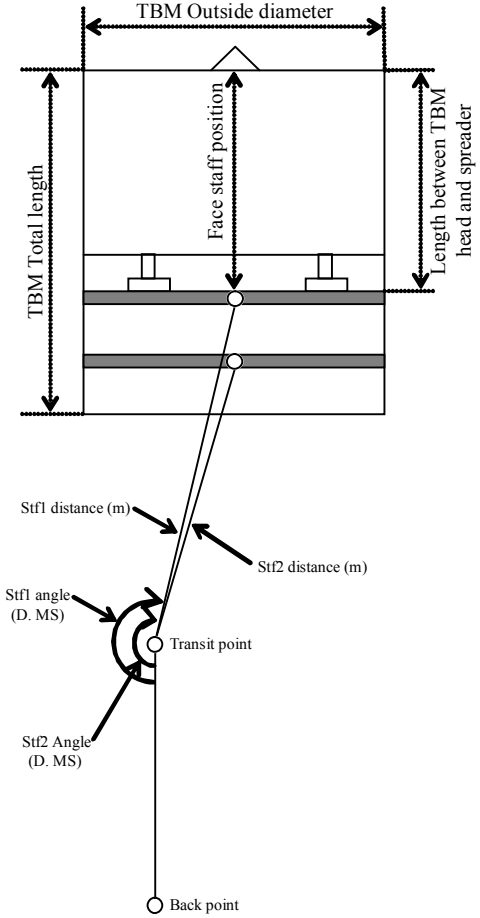

Target Setting Position

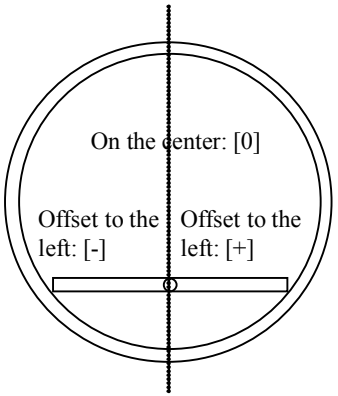

Level Survey Outline

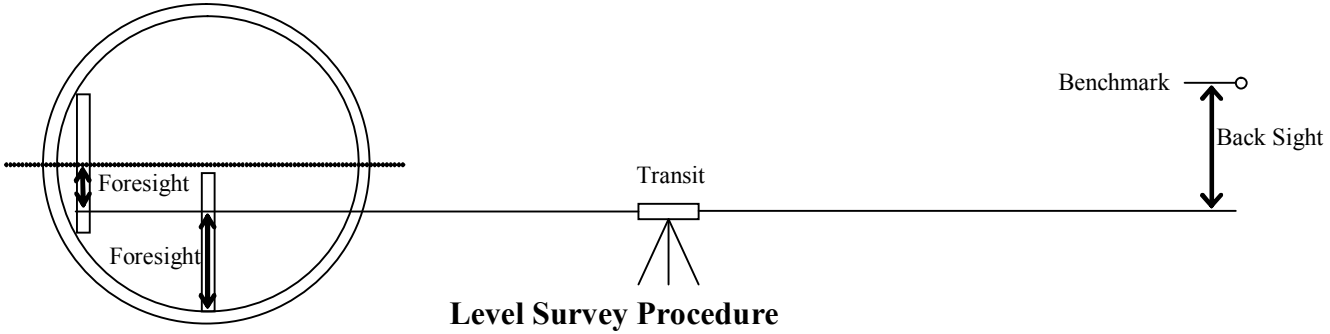

Plane Surveying Procedure

[1] Set the face-side staff. Note that it shall be set on the spreader plane with the jack fully retracted.

[2] Determine the target setting position (offset to the left or right) of the face-side staff.

[3] Measure the angle (deg., min., sec.) formed by Back point, Transit point, and Target of the face-side staff.

[4] Measure the distance (horizontal length in meter) between Transit and Target of the face-side staff.

[5] Move the staff horizontally toward the gate. No measuring of the setting position is required.

[6] Determine the target setting position (offset to the left or right) of the gate-side staff.

[7] Measure the angle (deg., min., sec.) formed by Back point, Transit point, and Target of the gate-side staff.

[8] Measure the distance (horizontal length in meter) between Transit and Target of the gate-side staff.

Level Survey Procedure

[1] Measure the Back sight from the benchmark. Mark [+] if it is above the benchmark, and mark [-] if below.

[2] Measure the foresight, which is the height from the pipe bottom inside TBM or the level above or below the pipe center. Use the measuring before and behind position identical to that in Plane Surveying for both the face-side and gate-side.

3-a. Machine Survey (2) [Staff Method]

TBM Survey Survey Results Entry Screen

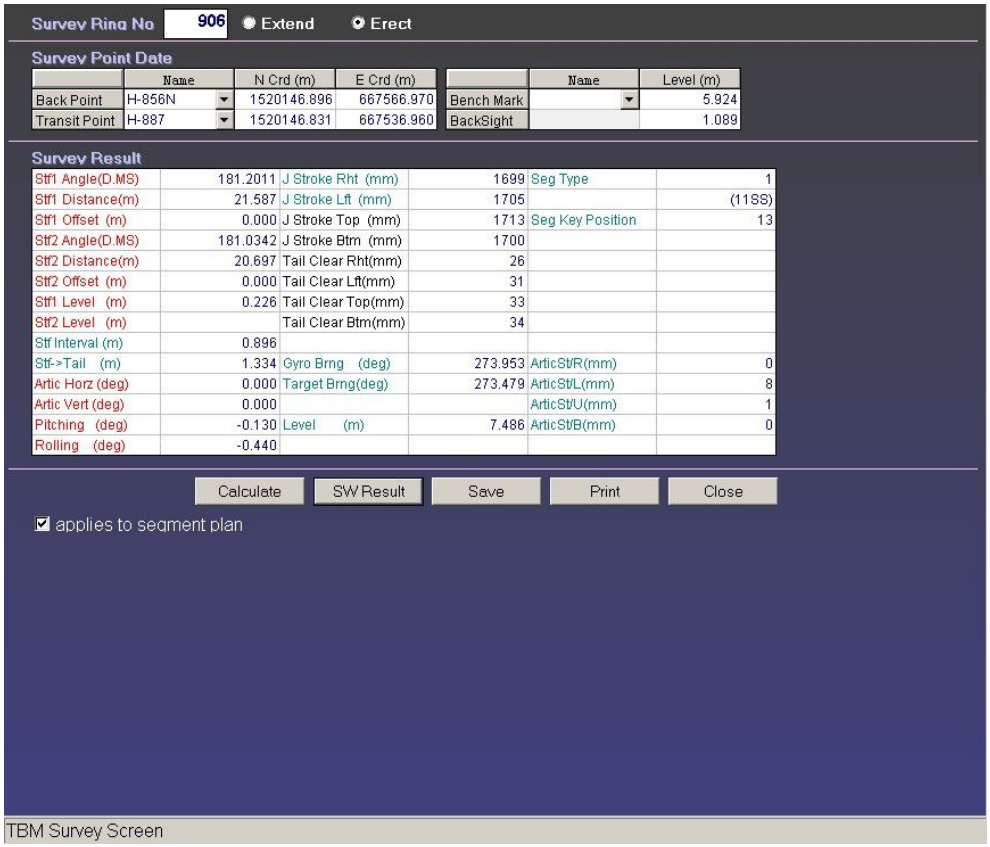

TBM Survey Screen

Fields of the red items have to be filled.
Fields in blue automatically display the calculation results.
Fields of the green items display values measured on entry. Correct them if necessary.
Fields of the black items are just for the segment information. Fill their fields if necessary.
(See 3. Machine Survey (common to all system))

Click Calculate button after filling out the fields.
Calculations are displayed if the input data are correct.
The alert message appears if there is something wrong with the input data.

Ring No.		Number of the surveyed ring
Extend / Erect		Selection of the state at survey

Survey Point Data

Back point		Selection of registered survey point for Back point
Transit point		Selection of registered survey point for Transit
Benchmark	(m)	Bench mark height (Altitude)
Back sight	(m)	Back sight reading

Survey Results

Stf1 Angle	(D. MS)	Angle: from Transit point to Face-side staff target
Stf1 Distance	(m)	Distance from Transit point to Face-side staff target
Stf1 Offset	(m)	Target setting position of Face-side staff
Stf2 Angle	(D. MS)	Angle: from Transit point to Gate-side staff target
Stf2 Distance	(m)	Distance: from Transit point to Gate-side staff target
Stf2 Offset	(m)	Target setting position of Gate-side staff
Staff Interval	(m)	(automatically calculated)
Face staff height	(m)	Foresight at Face-side staff position
Gate staff height	(m)	Foresight at Gate-side staff position
Pitching (deg)		Pitching at survey
Rolling (deg)		Rolling at survey
J stroke - right	(mm)	Right jack stroke at survey
J stroke - left	(mm)	Left jack stroke at survey
J stroke - upper	(mm)	Upper jack stroke at survey
J stroke - bottom	(mm)	Bottom jack stroke at survey
Tail clear - right	(mm)	Right tail clearance at survey
Tail clear - left	(mm)	Left tail clearance at survey
Tail clear - upper	(mm)	Upper tail clearance at survey
Tail clear - bottom	(mm)	Bottom tail clearance at survey
Front Robotec Brng	(deg)	Front Robotec Brng at survey
Target Brng	(deg)	Target Brng of the survey ring
Cumulative level	(m)	TBM head height (Level meter)
Seg type		Type of segment built up completely
Seg key position		K-piece position of segment built up completely

3. Machine Survey (common to all system)

Calculate TBM Survey Calculation Results Screen (common to all systems)

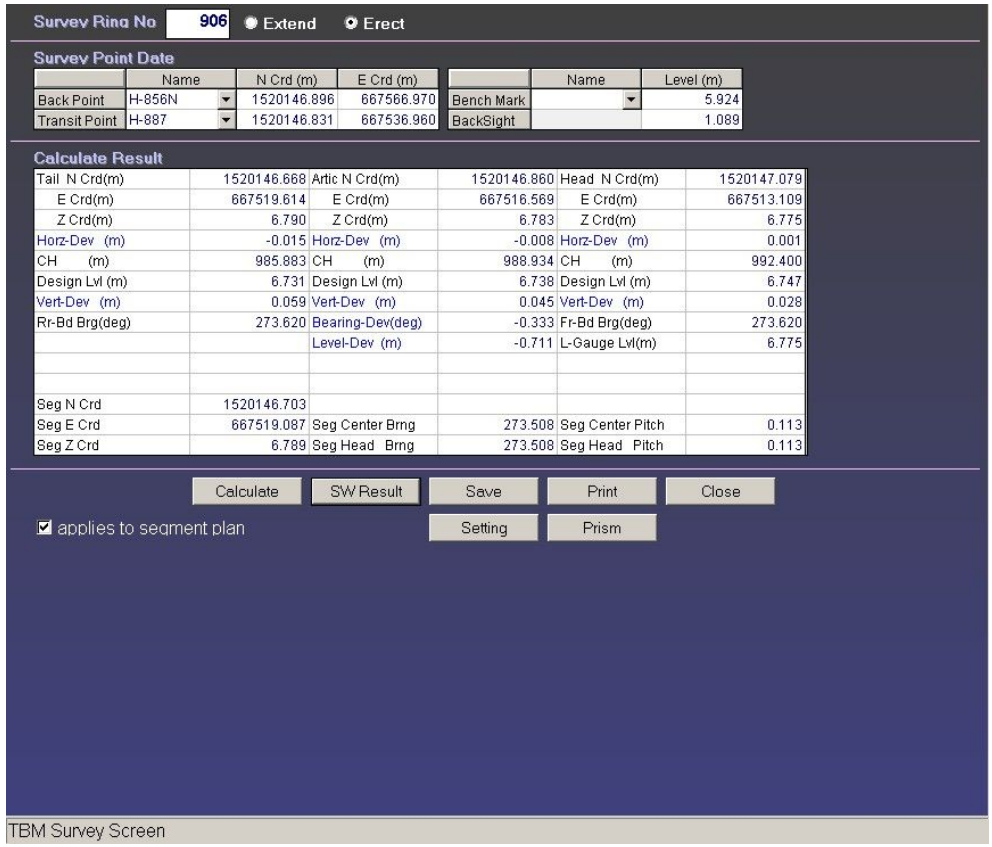

TBM Survey Screen

TBM tail data, TBM center data, and TBM head data are displayed in the left column, the center column, and the right column respectively.

The erecting segment depends on "extend" and "erect".
"Extend" requires ring last data, and "erect" requires the input ring data.

The segment assembly plan is updated with the data when save is performed with the "applies to segment plan" check box ON.

Tail (rear end)

X coordinate	(m)
Y coordinate	(m)
Z coordinate	(m)
Horizontal deviation	(m)
Cumulative distance	(m)
Design height	(m)
Vertical deviation	(m)
Rear-Bd Brng	(deg)

TBM Tail (rear end)

X coordinate
Y coordinate
Z coordinate
Horizontal deviation
Cumulative distance
Deign height on cumulative distance
Vertical deviation
Rear-Bd Brng

Articulate

X coordinate	(m)
Y coordinate	(m)
Z coordinate	(m)
Horizontal deviation	(m)
Cumulative distance	(m)
Design height	(m)
Vertical deviation	(m)
Net Brng deviation	(deg)
Net level deviation	(m)

TBM Articulate

X coordinate
Y coordinate
Z coordinate
Horizontal deviation
Cumulative distance
Design height on cumulative distance
Vertical deviation
Difference between Robotec Brng and TBM Brng.
Difference between Level meter results and TBM head coordinate.

Head

X coordinate	(m)
Y coordinate	(m)
Z coordinate	(m)
Horizontal deviation	(m)
Cumulative distance	(m)
Design height	(m)
Vertical deviation	(m)
Front-Bd Brng	(deg)
Level gauge level	(m)
Seg N Crd	(m)
Seg E Crd	(m)
Seg Z Crd	(m)
Seg Center Brng	(deg)
Seg Head Brng	(deg)
Seg Center Pitch	(deg)
Seg Head Pitch	(deg)

TBM Head

X coordinate
Y coordinate
Z coordinate
Horizontal deviation
Cumulative distance
Deign height on cumulative distance
Vertical deviation

Front-Bd Brng

Level gauge mounting height (typically at TBM head)

Erecting segment
X coordinate
Y coordinate
Z coordinate
Center Brng
Head Brng
Center pitching
Head pitching

3-b. Machine Survey (1) [Mirror Method] - Survey Schematic Diagram

Outline of Plane Surveying

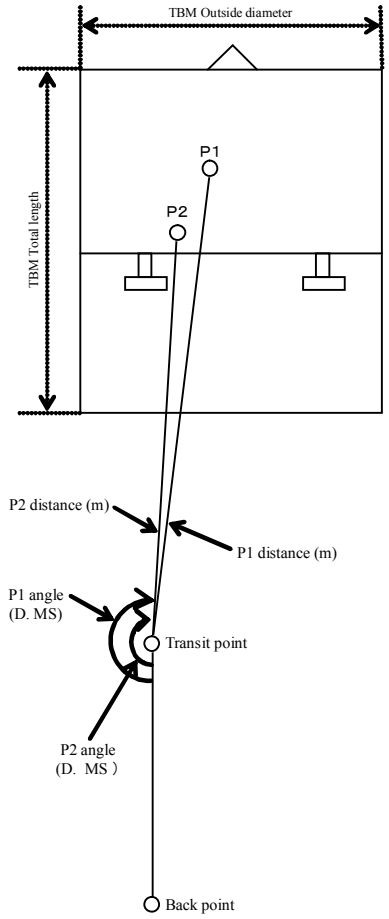

Prism Setting Position

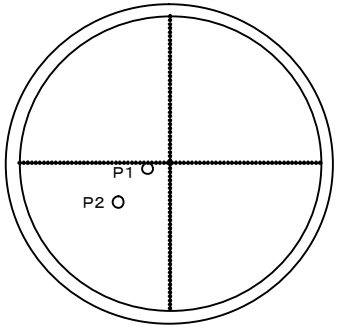

Plane Surveying Procedure

[1] Measure the angle (deg., min., sec.) formed by Back point, Transit point, and Prism 1.

[2] Measure the distance (horizontal length in meter) between Transit and Prism 1.

[3] Measure the angle (deg., min., sec.) formed by Back point, Transit point, and Prism 2.

[4] Measure the distance (horizontal length in meter) between Transit and Prism 2.

Click Prism button to display the Prism Position Setting Screen to set the prism position. (See 3-b. Machine Survey (3) [Mirror Method])

Prism 1 and 2 have to be attached to the front-Bd or rear-Bd.
Click Setting for Pitching / Rolling setting.

In the case of the Articulate machine, make sure to specify the prism position: Front-Bd or Rear-Bd.

Level Survey Outline

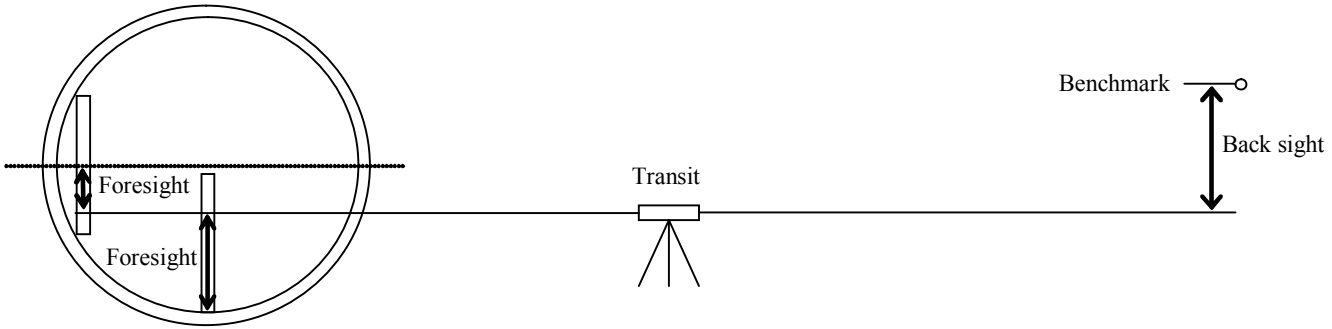

Level Survey Procedure

[1] Measure the Back sight from the benchmark. Mark [+] if it is above the benchmark, and mark [-] if below.

[2] Measure the foresight, which is the height from the pipe bottom inside TBM or the level above or below the pipe center.

3-b. Machine Survey (2) [Mirror Method]

TBM Survey(Mirror) Survey Results Entry Screen

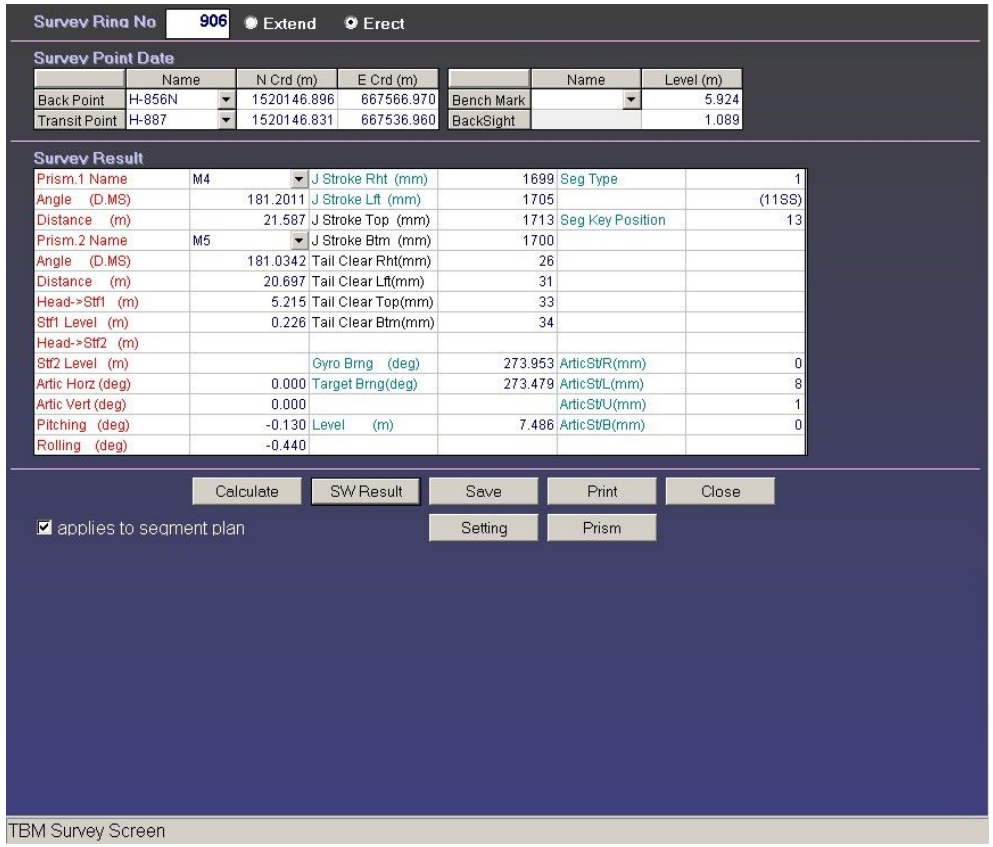

TBM Survey Screen

Fields of the red items have to be filled.
Fields in blue automatically display the calculation results.
Fields of the green items display values measured on entry. Correct them if necessary.
Fields of the black items are just for the segment information. Fill their fields if necessary.
(See 3. Machine Survey (common to all system))

Click Calculate button after filling out the fields.
Calculations are displayed if the input data are correct.
The alert message appears if there is something wrong with the input data.

Ring No.		Number of the surveyed ring
Extend / Erect		Selection of the state at survey
Survey Point Data		
Back point		Selection of registered survey point for Back point
Transit point		Selection of registered survey point for Transit
Benchmark	(m)	Bench mark height (Altitude)
Back sight	(m)	Back sight reading
Survey Results		
Prism 1 Name		Select the name of left (or front) prism
Prism 1 Angle	(D. MS)	Angle: from Transit point to Prism 1
Prism 1 Distance	(m)	Distance: from Transit point to Prism 1
Prism 2 Name		Select the name of right (or rear) prism
Prism 2 Angle	(D. MS)	Angle: from Transit point to Prism 2
Prism 2 Distance	(m)	Distance: from Transit point to Prism 2
Head -> Stf1	(m)	Measure position of Face-side foresight (Distance from face)
Stf1 level	(m)	Face-side foresight
Head -> Stf2	(m)	Measure position of Gate-side foresight (Distance from face)
Stf2 level	(m)	Gate-side foresight
Pitching (deg)		Pitching at survey
Rolling (deg)		Rolling at survey
J stroke - right	(mm)	Right jack stroke at survey
J stroke - left	(mm)	Left jack stroke at survey
J stroke - upper	(mm)	Upper jack stroke at survey
J stroke - bottom	(mm)	Bottom jack stroke at survey
Tail clear - right	(mm)	Right tail clearance at survey
Tail clear - left	(mm)	Left tail clearance at survey
Tail clear - upper	(mm)	Upper tail clearance at survey
Tail clear - bottom	(mm)	Bottom tail clearance at survey
Front Robotec Brng	(deg)	Front Robotec Brng at survey
Target Brng	(deg)	Target Brng of the survey ring
Cumulative level	(m)	TBM head height (Level meter)
Seg type		Type of segment built up completely
Seg key position		K-piece position of segment built up completely

3-c. Machine Survey [Mirror & Level Method]

TBM Surv(Mrr Lvl) Survey Results Entry Screen

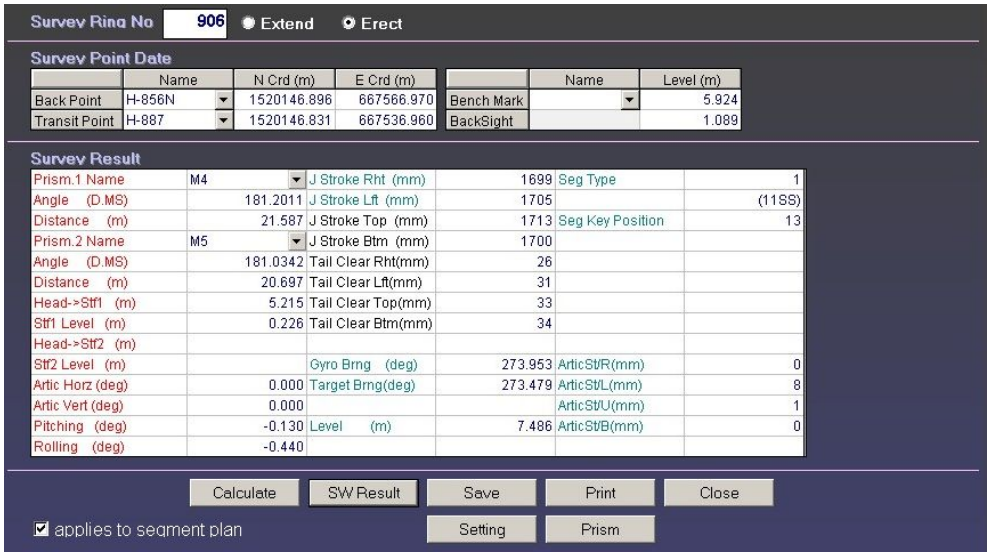

※ About the level calculate
There are two methods for calculate the level as follow:
1. Input the vertical angle and distance from T.S to B.S. (B.S for standard)
2. If did not input then direct use the T.S for standard.

Fields of the red items have to be filled.
Fields in blue automatically display the calculation results.
Fields of the green items display values measured on entry. Correct them if necessary.
Fields of the black items are just for the segment information. Fill their fields if necessary.
(See 3. Machine Survey (common to all system))

Click Calculate button after filling out the fields.
Calculations are displayed if the input data are correct.
The alert message appears if there is something wrong with the input data.

Ring No.	Number of the surveyed ring
Extend / Erect	Selection of the state at survey

Survey Point Data

Back point		Selection of registered survey point for Back point
Transit point		Selection of registered survey point for Transit
Vertical angle	(D.MS)	The vertical angle from T.S to B.S
Distance	(m)	The distance from T.S to B.S

Survey Results

Prism 1 Name		Select the name of left (or front) prism
Prism 1 Angle	(D. MS)	Angle: from Transit point to Prism 1
Prism 1 Distance	(m)	Distance: from Transit point to Prism 1
Prism 2 Name		Select the name of right (or rear) prism
Prism 2 Angle	(D. MS)	Angle: from Transit point to Prism 2
Prism 2 Distance	(m)	Distance: from Transit point to Prism 2
No.1vertical angle	(m)	The vertical angle from T.S to target1
No.2vertical angle	(m)	The vertical angle from T.S to target2
Pitching	(deg)	Pitching at survey
Rolling	(deg)	Rolling at survey
J stroke – right	(mm)	Right jack stroke at survey
J stroke – left	(mm)	Left jack stroke at survey
J stroke – upper	(mm)	Upper jack stroke at survey
J stroke – bottom	(mm)	Bottom jack stroke at survey
Tail clear - right	(mm)	Right tail clearance at survey
Tail clear - left	(mm)	Left tail clearance at survey
Tail clear - upper	(mm)	Upper tail clearance at survey
Tail clear - bottom	(mm)	Bottom tail clearance at survey
Front Robotec Brng	(deg)	The bearing of ROBOTEC when survey time
Target Brng	(deg)	Target Brng of the survey ring
Cumulative level	(m)	TBM head height (Level meter)
Seg type		Type of segment built up completely
Seg key position		K-piece position of segment built up completely

※ The vertical angle is from zenith (0).
The distance is mean horizontal distance.

3. Machine Survey [Mirror Method, Mirror & Level Method]

Prism — Prism Position Setting Screen

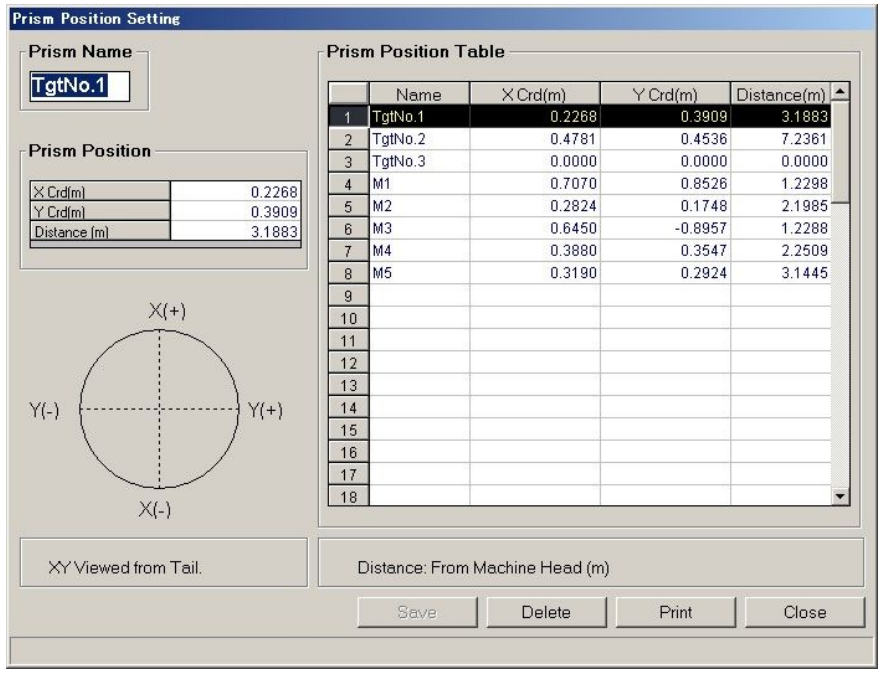

Setting of the installation position of the fixed prism in the shield machine.

Prism Name — Any name (not more than eight single-space alphanumeric characters and symbols)

Prism position

X coordinate (m) — Installed position: Upper, Bottom

Y coordinate (m) — Installed position: Left, Right

Distance (m) — Installed position: Distance from TBM head

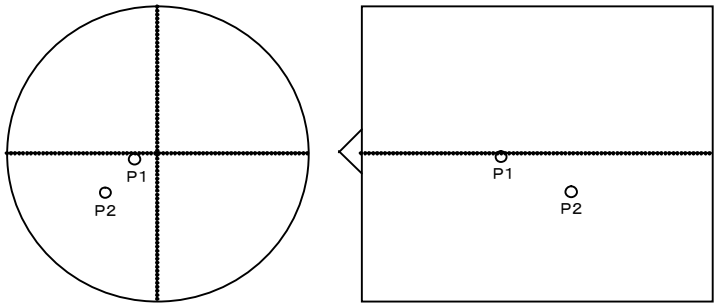

Setting — Prism Position Setting Screen

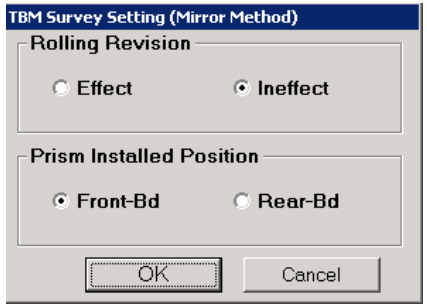

Select "Disabled" if Rolling Revision is not executed.

Select the prism installed position, Front-Bd or Rear-Bd.

It is not allowed to use two prisms covering both Front-Bd and Rear-Bd.

Considerations of TBM Survey Results - Final segment position found from TBM survey results

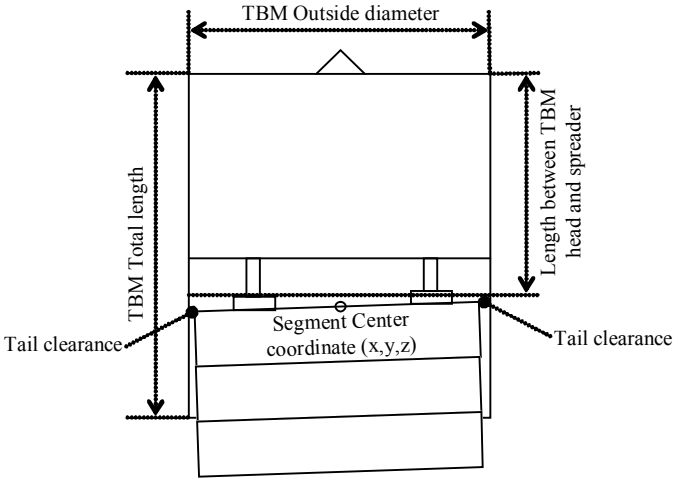

Segment Brng and Segment Face-Brng
(Segment Pitching and Segment Face Pitching)

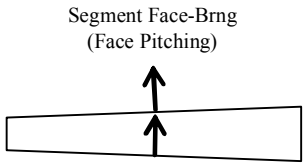

The coordinate, Brng, and pitching of the built-up segment can be found from the TBM survey results by entering the following values when the TBM survey results are entered.

[1]	J stroke - right	Measured value of the right jack
[2]	J stroke - left	Measured value of the left jack
[3]	J stroke - upper	Result value to be entered
[4]	J stroke - bottom	Result value to be entered
[5]	Tail clear - right	Result value to be entered
[6]	Tail clear - left	Result value to be entered
[7]	Tail clear - upper	Result value to be entered
[8]	Tail clear - bottom	Result value to be entered
[9]	Seg type	
[10]	Seg Key position	

With regard to strokes [1] and [2], TBM signal numeric values on entry are displayed.
Enter the result values instead, if necessary.

Enter strokes [3] and [4] using the the measuring method as with [1] and [2].
The strokes obtained as TBM signal generally means the size of cylinder stretch.

The segment information [9] and [10] is:
information of the previous segment of entered ring No. if the entry is made during "Extend"; or
information of segment of entered ring No. if the entry is made during "Erect".
The same is true for the segment information displayed in the calculation result.

"Final Segment" on the "Seg Build Plan" screen displays information resulted from the above.

4-a. Segment Survey (1) [Single-point] - Survey Schematic Diagram

Outline of Plane Surveying

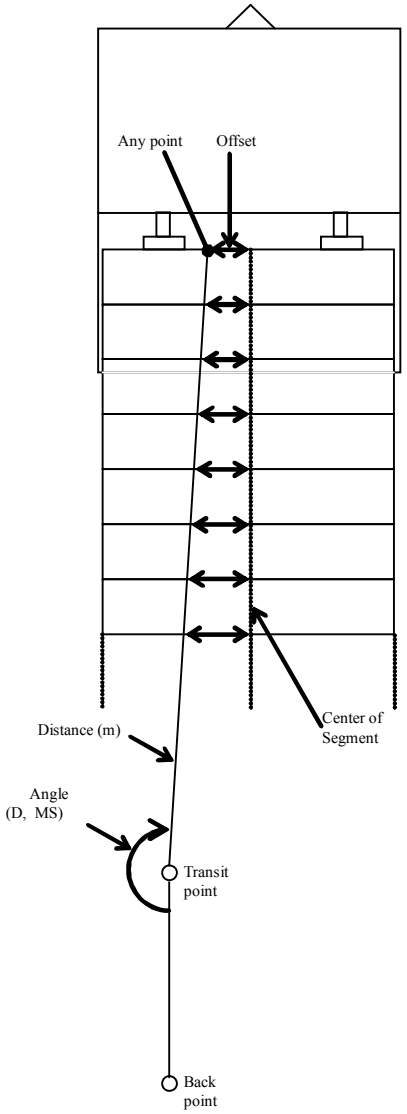

Offset

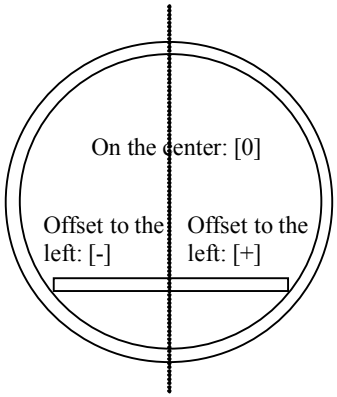

Plane Surveying Procedure

[1] Put the staff on the segment nearest to the face, but within the measurable range. Set the staff in such a manner that its mark meets the border between two segments.

[2] Measure the angle (deg., min., sec.) formed by Back point, Transit point, and a staff (any point).

[3] Measure the distance (horizontal length in meter) between Transit and the staff.

[4] Measure the offset (in meter) between the segment center and the staff on the collimation line.

[5] Move the staff to the segment immediately before the current one.

[6] Repeat Step [4] to measure the offset (in meter).

[7] Repeat Steps [5] and [6] with the remaining segments within the measurable range.

Level Survey Outline

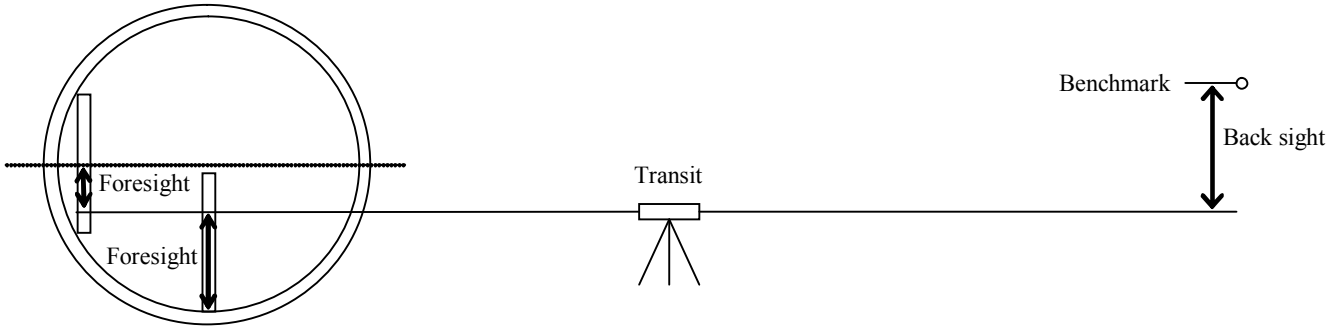

Level Survey Procedure

[1] Measure the Back sight from the benchmark. Mark [+] if it is above the benchmark, and mark [-] if below.

[2] Measure the foresight, which is the height from the rib. (the pipe bottom inside the segment)

4-a. Segment Survey (2) [Single-point]

Seg Srv(one point) Survey Results Entry Screen

Segment Survey Screen

If the ring No. is "0", enter ring numbers in backward order (0, -1, -2, …).
For the segment type, see Segment Information Register screen (9. Segment Type Setting).

Click Calculate button after filling out the fields.
Calculations are displayed if the input data are correct.
The alert message appears if there is something wrong with the input data.

Ring No.	Number of surveyed ring
Front, Rear	Survey direction

Survey point data

Back point		Selection of registered survey point for Back point
Transit point		Selection of registered survey point for Transit
Benchmark	(m)	Bench mark height (Altitude)
Back sight	(m)	Back sight reading

Survey results

Ring		Survey ring No. (from Face-side to Gate-side, normally)
in		Type of segment
Segment length	(m)	Center length when building up the segment
Angle	(D.MS)	Angle measured with any point on the given segment
V-angle	(D.MS)	To be "90" in the case of horizontal length
Slope length	(m)	To be horizontal length if no V-angle (90°).
Offset	(m)	Distance from each segment center to the collimation line
Level	(m)	Foresight of each segment

4-b. Segment Survey (1) [All-point] - Survey Schematic Diagram

Outline of Plane Surveying

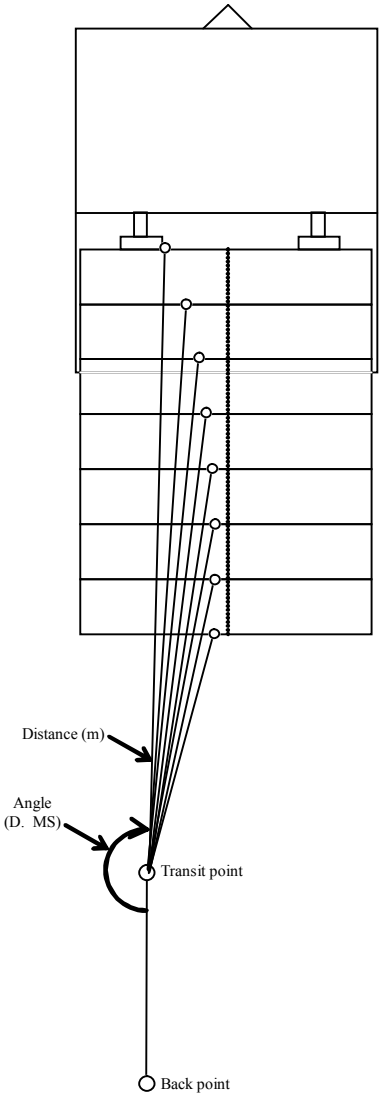

Offset

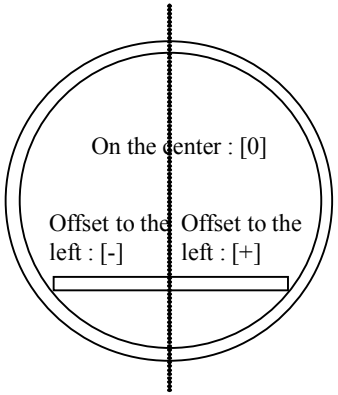

Level Survey Outline

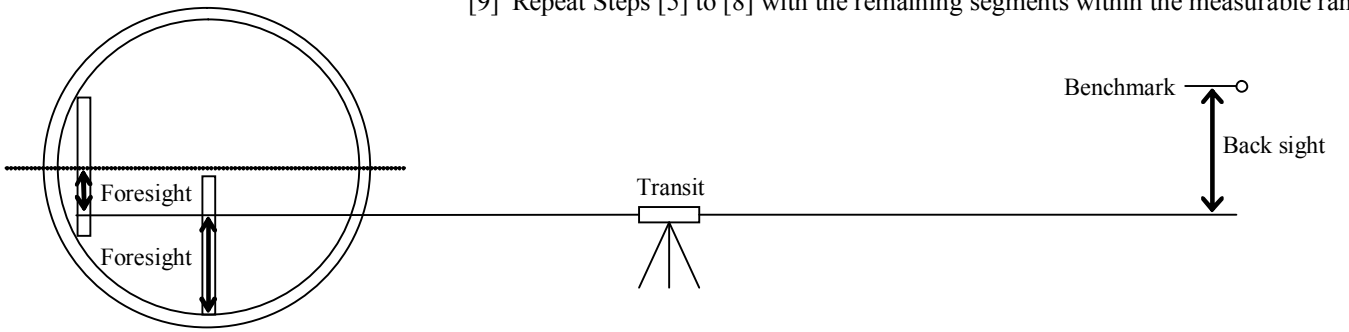

Plane Surveying Procedure

[1] Put the staff on the segment nearest to the face, but within the measurable range. Set the staff in such a manner that its mark meets the border between two segments.

[2] Measure the angle (deg., min., sec.) formed by Back point, Transit point, and a collimation point.

[3] Measure the distance (horizontal length in meter) between Transit and the collimation point.

[4] Measure the distance from the segment center to the collimation point.

[5] Move the staff to the segment immediately before the current one.

[6] Measure the angle (deg., min., sec.) formed by Back point, Transit point, and a collimation point.

[7] Measure the distance (horizontal length in meter) between Transit and the collimation point.

[8] Measure the distance from the segment center to the collimation point.

[9] Repeat Steps [5] to [8] with the remaining segments within the measurable range.

Level Survey Procedure

[1] Measure the Back sight from the benchmark. Mark [+] if it is above the benchmark, and mark [-] if below.

[2] Measure the foresight, which is the height from the rib. (the pipe bottom inside the segment)

4-b. Segment Survey (2) [All-Point]

Seg Srv(All point) Survey Results Entry Screen

Segment Survey Screen

If the ring No. is "0", enter ring numbers in backward order (0, -1, -2, …).
For the segment type, see Segment Information Register screen .
(9. Segment Type Setting)

Click Calculate button after filling out the fields.
Calculations are displayed if the input data are correct.
The alert message appears if there is something wrong with the input data.

Ring No.		Number of surveyed ring
Survey point data		
Back point		Selection of registered survey point for Back point
Transit point		Selection of registered survey point for Transit
Benchmark	(m)	Bench mark height (Altitude)
Back sight	(m)	Back sight reading
Survey results		
Ring		Survey ring No. (from Face-side to Gate-side, normally)
in		Type of segment (See Segment Info Register screen)
Segment length	(m)	Center length when building up the segment
Offset	(m)	Distance from each segment center to the collimation point (arbitrary point)
Angle	(D.MS)	Angle of the center of each segment
Distance	(m)	Horizontal length to the center of each segment
Height	(m)	Foresight of each segment

4-b. Segment Survey (3) [All-Point]

Calculate Segment Survey Calculation Results screen (common to every method)

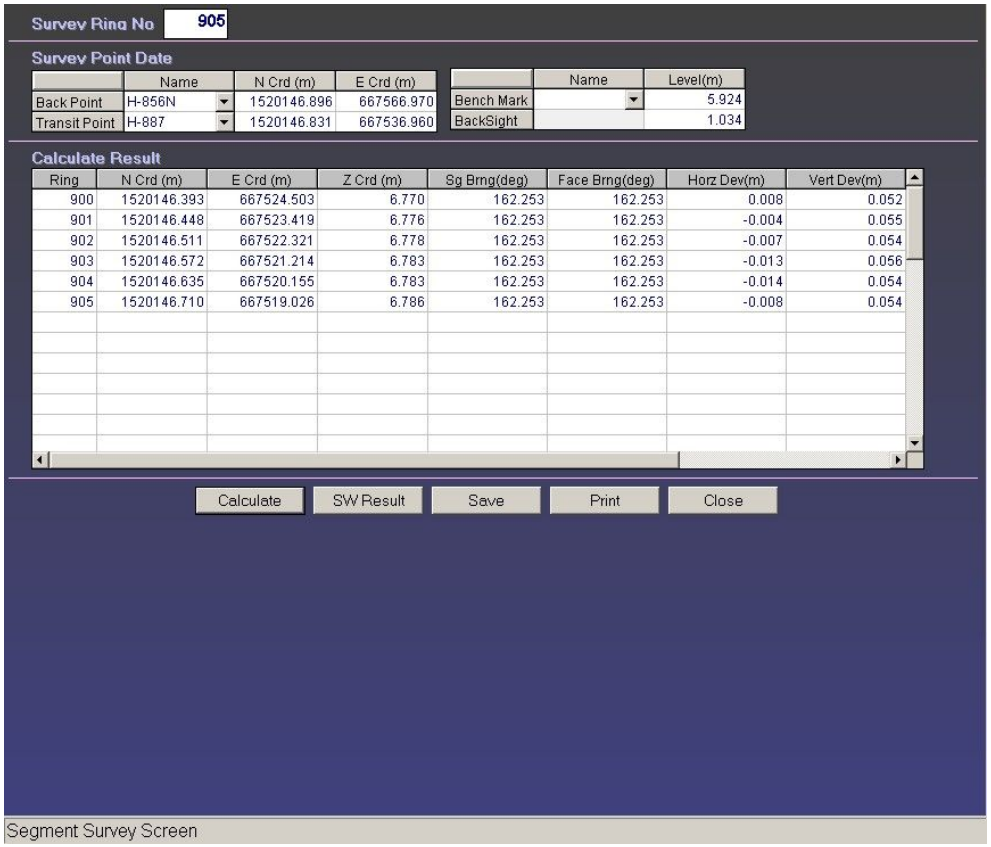

Segment Survey Screen

X coordinate	(m)	Segment	X coordinate
Y coordinate	(m)		Y coordinate
Z coordinate	(m)		Z coordinate
Segment Brng	(deg)		Center Brng
Face Brng	(deg)		Face Brng
Horizontal deviation	(m)		Horizontal deviation
Vertical deviation	(m)		Vertical deviation
Cumulative distance	(m)		Cumulative distance

5. Segment Building Plan (1) [Adjustment of Meandering]

At Excavation Finish (Before Plan)

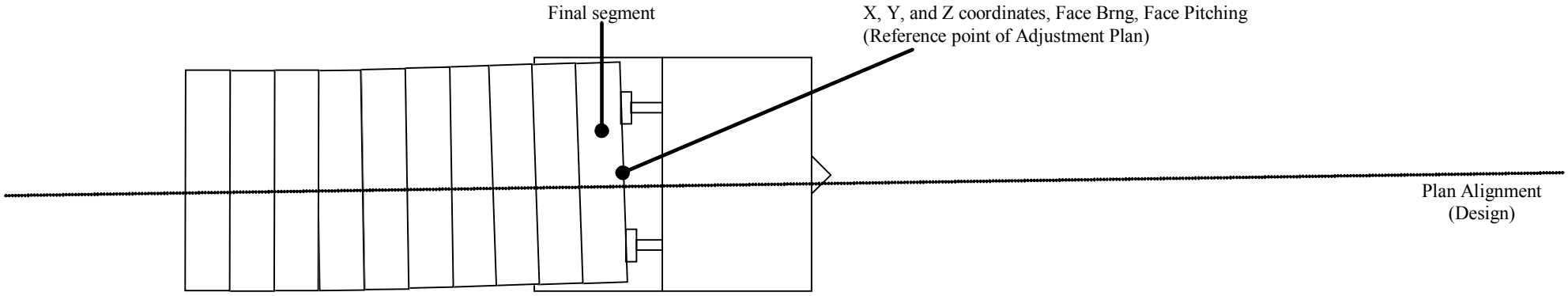

Run a simulation to find how to build up segments from now on in order to put the line of excavation right back on the planned alignment.

Segment Building Plan : Planning for Adjustment of Meandering

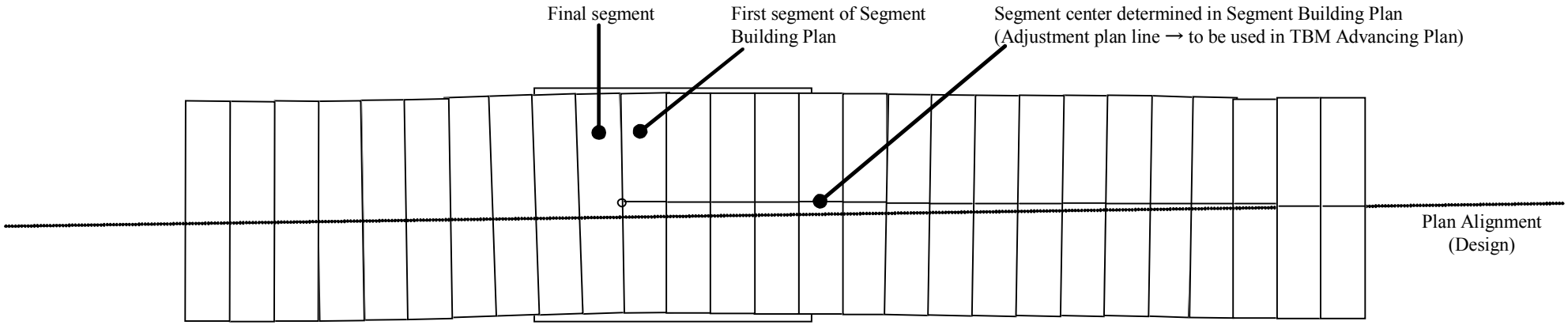

* It is necessary to go through in TBM up to the TBM head.

5. Segment Building Plan (2) [Adjustment of Meandering]

Seg Build plan Segment Building Plan Entry Screen

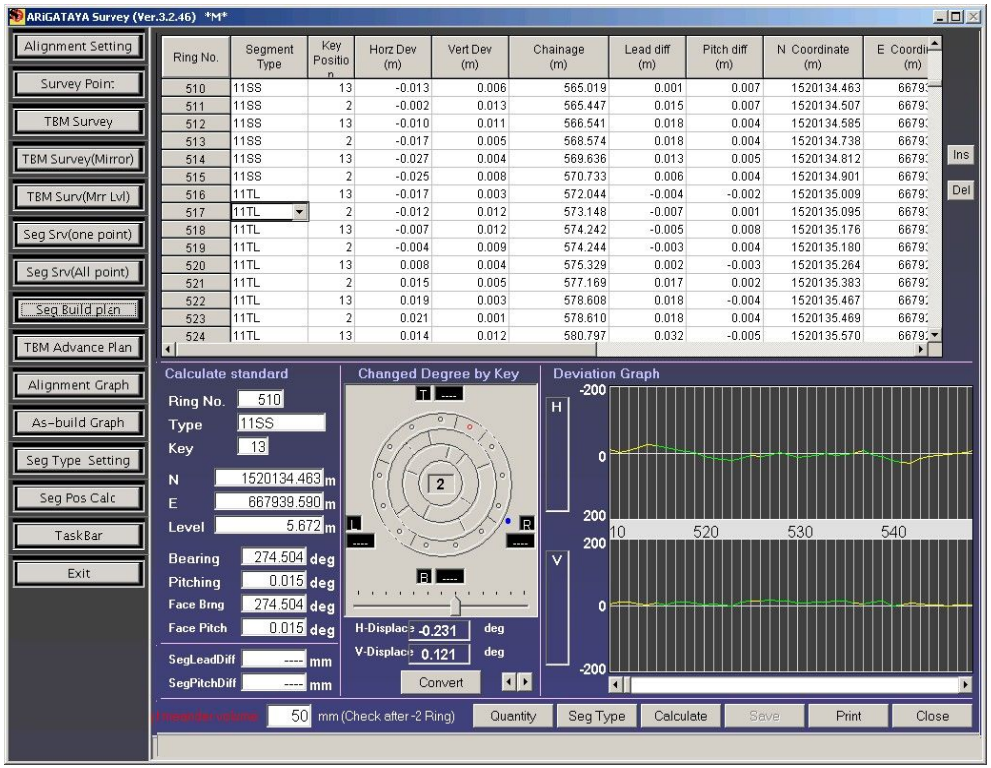

Enter segment types and key positions of the rings to be calculated up to the last ring No.

Calculation is implemented with reference to information of the final segment.
Final Segment is the segment that meets the entered information among built up segments.
The final segment information is displayed if the required information is filled out on the TBM Survey screen.

The deviation from the plan alignment is found by calculating the X, Y, and Z coordinates of the subsequent segment one after another based on the segment type and key position of the reference segment.

The calculation continues throughout all the consecutive rings with segment numbers entered.

Setting

Segment type	Setting of segment type
Key position	Setting of position of K-type segment

Calculation Results

X coordinate	(m)	Face-side X coordinate
Y coordinate	(m)	Face-side Y coordinate
Height	(m)	Face-side Z coordinate
Brng	(deg)	Center Brng
Pitching	(deg)	Center Pitching
Face Brng	(deg)	Face Brng
Face Pitching	(deg)	Face Pitching
Horizontal deviation	(m)	Horizontal deviation
Vertical deviation	(m)	Vertical deviation
TBM head distance	(m)	Face-side cumulative distance
Read difference	(m)	Difference between left and right
Pitch difference	(m)	Vertical difference

Final Segment

Ring No.		Reference Ring No.
Type		Setting of segment type
Key position		Setting of position of K-type segment
X coordinate	(m)	Face-side X coordinate
Y coordinate	(m)	Face-side Y coordinate
Height	(m)	Face-side Z coordinate
Brng	(deg)	Center Brng
Pitching	(deg)	Center Pitching
Face Brng	(deg)	Face Brng
Face Pitching	(deg)	Face Pitching

5. Segment Building Plan (3) [Adjustment of Meandering]

Entry and Change of Segment Type

[1] Ring-by-ring (row-by-row) Changing

Ring No.	Segment Type	Key Position	N Coordinate (m)	E Coordinate (m)	Level (m)	Bearing (deg)	Pitching (deg)	Face Brng (deg)	Face Pitch (deg)
510	11SS	13	1520134.463	667939.590	5.672	274.504	0.015	274.504	0.015
511	11SS	2	1520134.507	667939.164	5.681	274.242	0.005	274.242	0.005
512	11SS	13	1520134.585	667938.073	5.681	274.180	0.073	274.180	0.073
513	11SS	2	1520134.738	667936.046	5.680	274.177	0.073	274.177	0.073
514	11SS	13	1520134.812	667934.987	5.682	274.271	0.054	274.271	0.054
515	11SS	2	1520134.901	667933.893	5.688	274.411	0.063	274.411	0.063
516	11TL	13	1520135.009	667932.587	5.687	274.127	0.186	274.388	0.186
517	11TL	2	1520135.095	667931.486	5.699	274.518	0.120	274.257	0.120
518	11TL	13	1520135.176	667930.395	5.701	274.257	0.120	274.026	-0.001
519	11TL	2	1520135.180	667930.393	5.698	274.247	0.071	273.986	0.071
520	11TL	13	1520135.264	667929.312	5.696	273.963	0.195	273.701	0.195
521	11TL	2	1520135.383	667927.475	5.702	273.311	0.103	273.049	0.103
522	11TL	13	1520135.467	667926.039	5.704	273.102	0.215	272.841	0.215
523	11TL	2	1520135.469	667926.037	5.702	272.841	0.075	272.841	0.075
524	11TL	13	1520135.570	667923.852	5.718	272.460	0.243	272.199	0.243

Ins Del

Click the segment type of a ring. The list of available segments appears.
Select an appropriate segment in the list.

Enter the key position directly.

Click for insert line Ins .

Click for delete line Del .

[2] Batch Changing

Click Seg Type to show the following window.

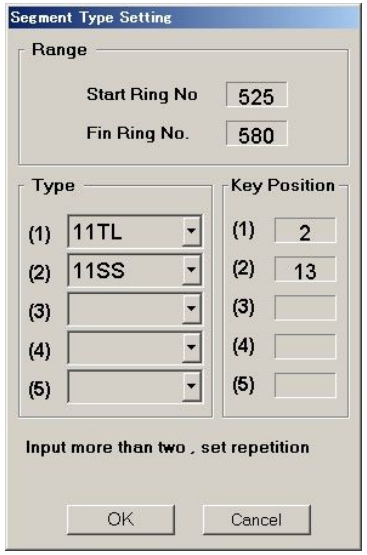

Enter setting-start ring No.
Enter setting-end ring No.

Five consecutive types with the setting-start ring No. as (1), as one combination pattern, can be continuously entered.
Key positions can be entered as well at the same time.

If only (1) and (2) are entered as shown on the left, (1) and (2) are repeatedly set.
Use the method [1] to change a part of settings, if needed after the setting is complete.

Click OK after the entry is complete.

Click Cancel to cancel the setting.

5. Segment Building Plan (4) [Adjustment of Meandering]

Setting of Final Segment Information

The final segment information can be obtained as follows.

[1] Use the TBM survey data (the final segment position found from TBM survey on TBM Survey Calculation Results Screen).

[2] Survey the segment itself and enter the reference segment information for calculation.

The screen called up displays the last data that were entered for TBM survey.

Re-enter the data obtained by segment survey if available.

SegLeadDiff : Sin (TBM bearing – Face bearing) * Segment radius * 2
SegPitchDiff : Sin (TBM bend bearing – Face bend bearing) * segment radius * 2

Key Position and Segment Displacement Amount

Ring No.	Segment Type	Key Position	Horz Dev (m)	Vert Dev (m)	Chainage (m)	Lead diff (m)	Pitch diff (m)	N Coordinate (m)	E Coordi (m)
510	11SS	13	-0.013	0.006	565.019	0.001	0.007	1520134.463	6679
511	11SS	2	-0.002	0.013	565.447	0.015	0.007	1520134.507	6679
512	11SS	13	-0.010	0.011	566.541	0.018	0.004	1520134.585	6679
513	11SS	2	-0.017	0.005	568.574	0.018	0.004	1520134.738	6679
514	11SS	13	-0.027	0.004	569.636	0.013	0.005	1520134.812	6679
515	11SS	2	-0.025	0.008	570.733	0.006	0.004	1520134.901	6679
516	11TL	13	-0.017	0.003	572.044	-0.004	-0.002	1520135.009	6679
517	11TL	2	-0.012	0.012	573.148	-0.007	0.001	1520135.095	6679
518	11TL	13	-0.007	0.012	574.242	-0.005	0.008	1520135.176	6679
519	11TL	2	-0.004	0.009	574.244	-0.003	0.004	1520135.180	6679
520	11TL	13	0.008	0.004	575.329	0.002	-0.003	1520135.264	6679
521	11TL	2	0.015	0.005	577.169	0.017	0.002	1520135.383	6679
522	11TL	13	0.019	0.003	578.608	0.018	-0.004	1520135.467	6679
523	11TL	2	0.021	0.001	578.610	0.018	0.004	1520135.469	6679
524	11TL	13	0.014	0.012	580.797	0.032	-0.005	1520135.570	6679

The displacement amount at each key position is calculated so as to determine the K-type segment Position (i.e. key position of allocated segment).

Enter (select) the segment type, and then, click the ring No.

The row of the clicked ring No. is highlighted.

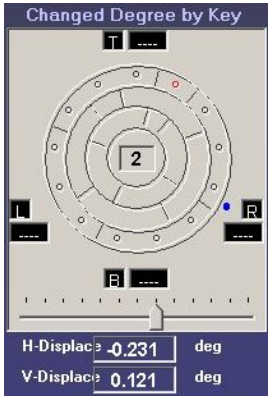

The key position varies as the slide bar is moved. The horizontal and vertical displacements varies as well.

The setting regarding two rings (one is the last ring and the other is the second one from the last ring) are displayed in the diagram, which enables viewing of segment joints.

Determine the key position and enter through the keyboard.

T : Tail clearance Top (mm)
B : Tail clearance Bottom (mm)
R : Tail clearance Right (mm)
L : Tail clearance Left (mm)
(White value is the result after erection. Yellow value is the result after excavation. Others is「----」)

5. Segment Building Plan (5) [Adjustment of Meandering]

Calculation

Click Calculate when data entry is complete.

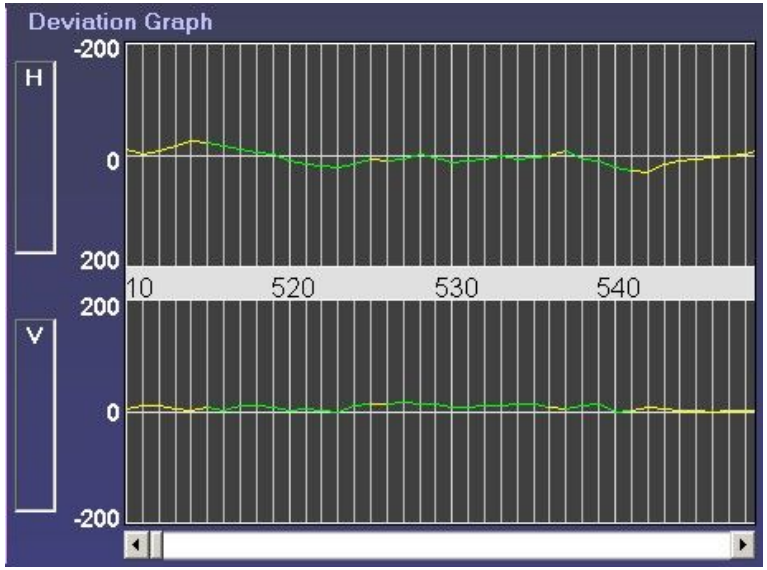

The plan alignment is at the center of display in each case: Horizontal Deviation and Vertical Deviation.
The graph shows the face-side segment deviation found by calculation.

Straight segments are colored in yellow, and Tapered segments in green in the graph.

The display range is adjustable.
Go to [Screen Select] → [Maintenance] → [Loop Maintenance].
Change "Upper Limit" and/or "Lower Limit" of "Horizontal Deviation" and/or "Vertical Deviation" thereof as needed.

* Note that the segments have to be within the TBM deviation until they go beyond the TBM head in case that the final segment of the calculation reference has been obtained out of the TBM survey data.

Saving of Data

Click Save to save the calculation results if they are proper and useable.
The saved segment type is used in the TBM Advancing Plan.

Data Conversion

Convert button converts the graph data on the screen into CSV format.
The converted file is saved as follows.
D:¥ARiGATAYA¥TextRepo¥SgmntPln.Csv

6. TBM Advancing Plan (1) [Calculation of Target Brng / Traget Height / Target Pitching]

At Survey Finish

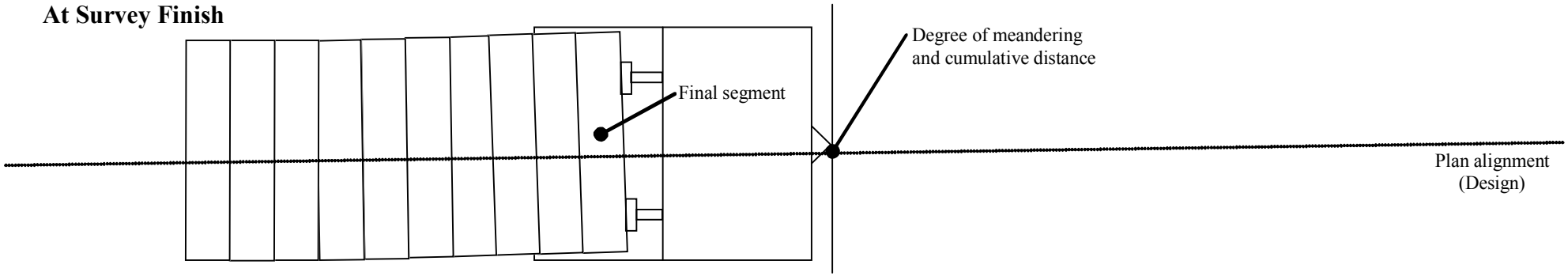

The cumulative distance at the survey finish is used as the reference. Select the calculation basis: Plan Alignment or Revised Alignment.
(which is determined on the Segment Building Plan screen)

[1] Plan Alignment : On the assumption that the shield machine is on the plan alignment of the cumulative distance at the survey point, the target value of future ring "Extend" is calculated.

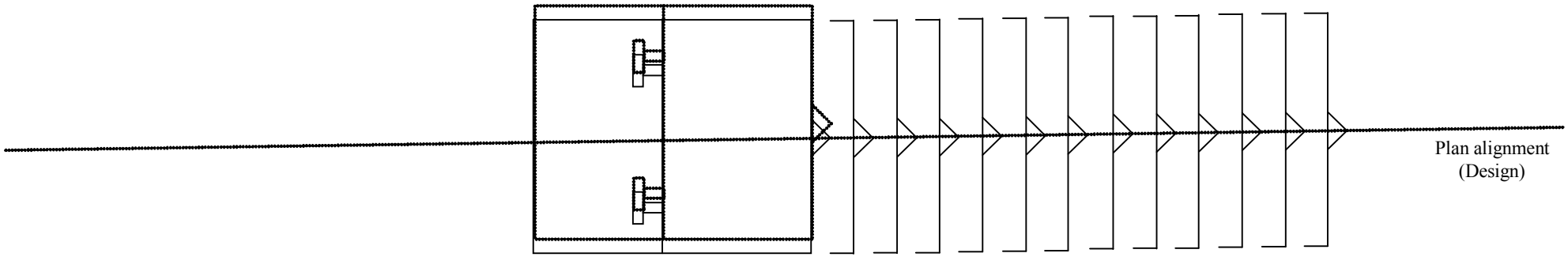

[2] Revised Alignment : The target value on the revised alignment from the survey point is calculated.

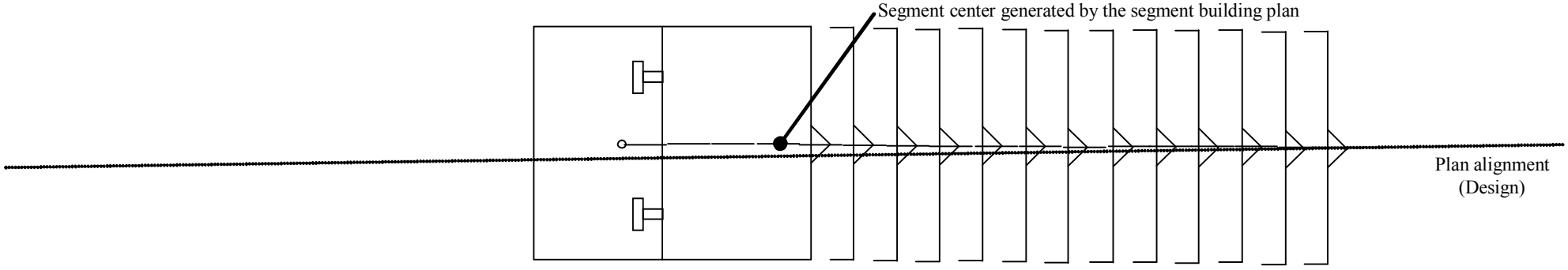

6. TBM Advancing Plan (2)

TBM Advance Plan TBM Advancing Plan Entry Screen

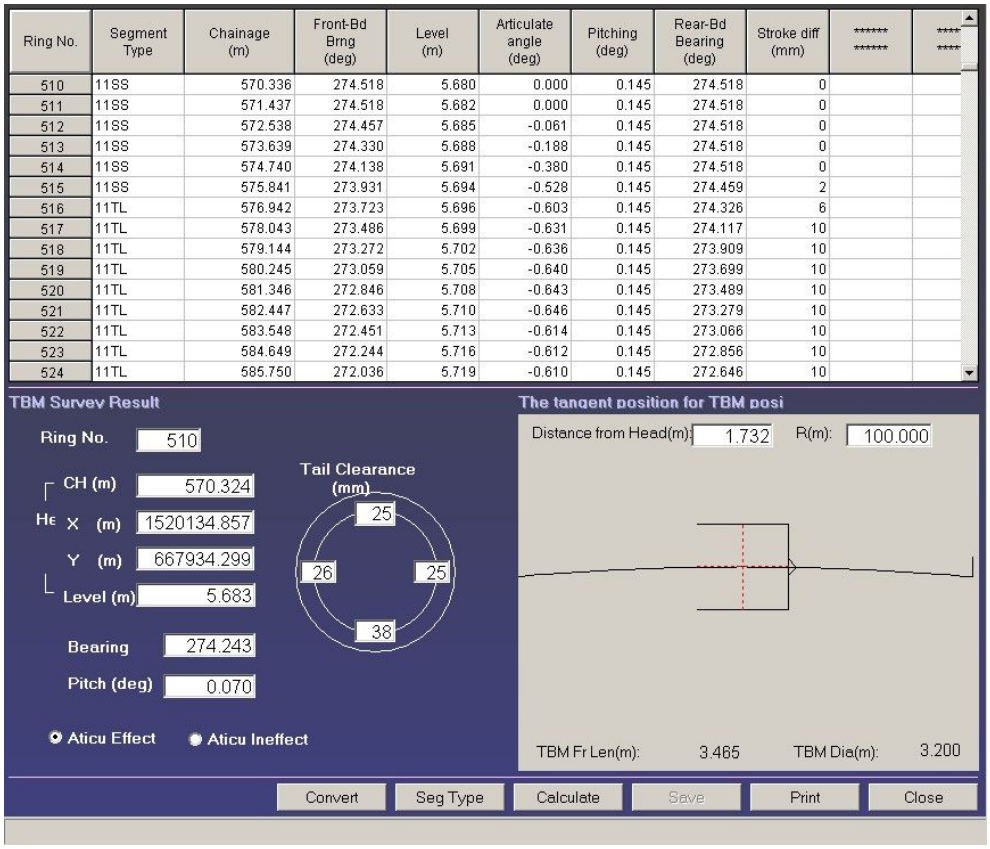

Setting

Segment type		Setting of segment type

Calculation Results

Distance	(m)	TBM head distance
Front-Bd Brng	(deg)	TBM Brng
Height	(m)	TBM head height
Articulate angle	(deg)	[not applicable]
Pitching	(deg)	TBM pitching
Rear-Bd Brng	(deg)	TBM rear-bd brng
Stroke difference	(mm)	Jack stroke difference

TBM survey Results

Ring No.		Reference survey ring No.
Head distance	(m)	TBM head cumulative distance
Head X	(m)	TBM head X coordinate
Head Y	(m)	TBM head Y coordinate
Head height	(m)	TBM head Z coordinate
Brng	(deg)	TBM Brng
Pitching	(deg)	TBM pitching

Enter segment types of the rings to be calculated up to the last ring No.

The segment type previously set in the Segment Building Plan, if any, shall prevail.
If, after execution of the Segment Building Plan, the segment type previously set has been revised in the TBM Advancing Plan, the revised information shall prevail.

The data displayed in the TBM survey results shall be used as the reference for calculation.
The final TBM survey results are displayed as long as the TBM survey has been filled out.

It is allowed to change the survey results if necessary. Note that the factors taking part in the calculation are "distance" only.

6. TBM Advancing Plan (3)

Entry and Change of Segment Type

[1] Ring-by-ring (row-by-row) Changing

Ring No.	Segment Type	TD (m)	Front-Bd Brng	Level (m)	Articulate angle	Pitching (deg)	Rear-Bd Bearing	Stroke diff (mm)	******	****
861	11SS	948.728	270.877	6.637	-1.220	0.145	272.098	17		
862	07TL	949.620	270.531	6.639	-1.225	0.145	271.756	16		
863	11SS	950.512	270.184	6.641	-1.168	0.145	271.352	20		
864	07TL	951.405	269.790	6.644	-1.290	0.145	271.079	13		
865	11SS	952.297	269.450	6.646	-1.288	0.145	270.738	16		
866	07TL	953.189	269.163	6.648	-1.234	0.145	270.396	16		
867	11SS	954.081	268.962	6.650	-1.093	0.145	270.055	16		
868	07TL	954.974	268.847	6.653	-0.866	0.145	269.713	16		
869	11SS	955.866	268.827	6.655	-0.536	0.145	269.363	17		
870	07TL	956.735	268.827	6.657	-0.267	0.145	269.094	13		
871	11SS	957.627	268.827	6.659	-0.087	0.145	268.914	8		
872	11SS	958.728	268.827	6.662	0.002	0.145	268.825	4		
873	11SS	959.829	268.827	6.665	0.000	0.145	268.827	0		
874	11SS	960.930	268.827	6.668	0.000	0.145	268.827	0		
875	11SS	962.031	268.827	6.670	0.000	0.145	268.827	0		
876	11SS	963.132	268.827	6.673	0.000	0.145	268.827	0		

Click the segment type of a ring, and the list of available segments appears.

Select an appropriate segment in the list and enter the key position directly.

[2] Batch Changing

Click Seg Type to show the following window.

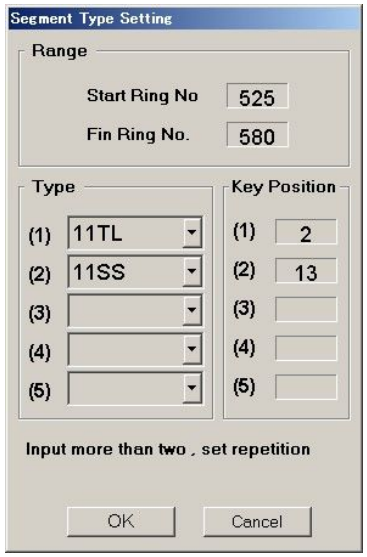

Enter setting-start ring No.
Enter setting-end ring No.

Five consecutive types with the setting-start ring No. as (1), as one combination pattern, can be continuously entered.
Key positions can be entered as well at the same time.

If only (1) and (2) are entered as shown on the left, (1) and (2) are repeatedly set.
Use the method [1] to change a part of settings, if needed after the setting is complete.

Click OK after the entry is complete.

Click Cancel to cancel the setting.

6. TBM Advancing Plan (4)

Setting of Final TBM Survey Results

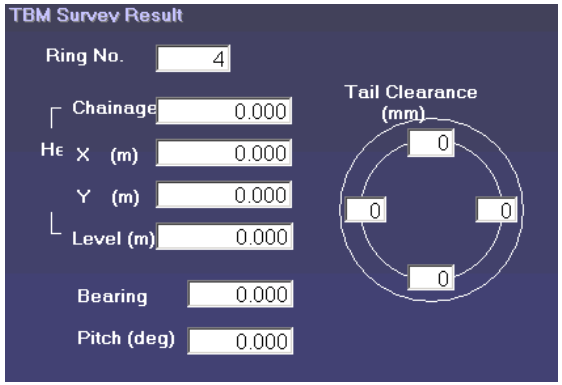

The screen called up displays the last data that were entered for TBM survey.
The factors used as the reference for calculation are "distance" only.
Revise the data through the keyboard if there is something wrong with them.

Setting of Tangent Position for TBM Position Calculation

Determine which point on TBM is located on the base line so as to set the target brng of a curve interval. Determine a point each on the front part and rear part of TBM.

[1] Setting: TBM front part

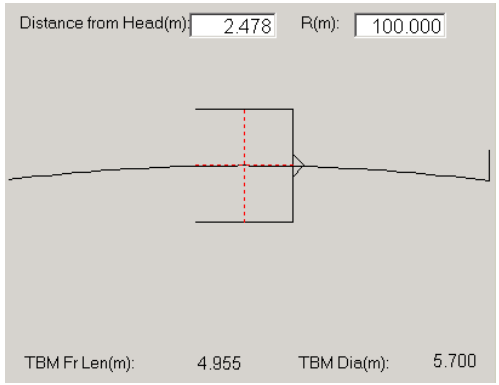

Enter the distance from the TBM head to specify the tangent position.

Neglect the R field since it has no relation with calculation.

[2] Setting: TBM rear part

Go to [Screen Select] → [Maintenance] → [System Info] for setting.

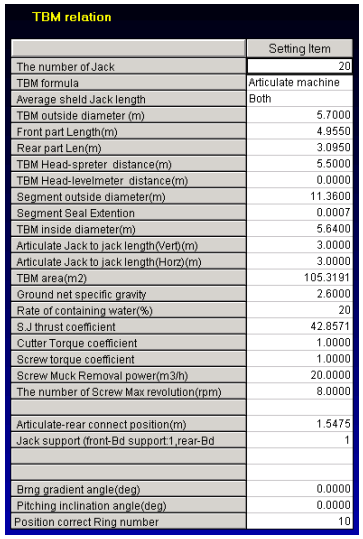

Enter the distance from the TBM center (articulate) to specify the tangent position.

6. TBM Advancing Plan (5)

Calculation

Click [Calculate] when data entry is complete.

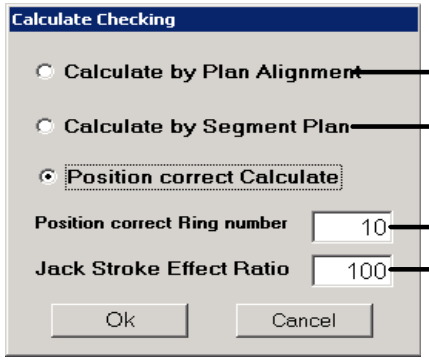

→ The case that calculation is implemented on Plan Alignment

→ The case that calculation is implemented on Revised Alignment determined in Segment Building Plan

→ The case that calculation is implemented with the number of rings entered in Position Correct Ring Number

→ Set the Jack Stroke Effect Ratio to "100" unless otherwise needed

Click [Ok] to start calculation after setting is complete. Click [Cancel] to cancel calculation if necessary.

Calculation is implemented for all the rings to which segment types have been set.

The table displays new data after calculation is complete.

Ring No.	Segment Type	Chainage (m)	Front-Bd Brng (deg)	Level (m)	Articulate angle (deg)	Pitching (deg)	Rear-Bd Bearing (deg)	Stroke diff (mm)	****** ******	****** ******
4	RCST1	0.000	201.776	14.277	0.000	-1.482	201.776			
5	RCST1	1.200	201.776	14.246	0.000	-1.482	201.776	0		
6	RCST1	2.401	201.776	14.215	0.000	-1.482	201.776	0		
7	RCST1	3.601	201.776	14.184	0.000	-1.482	201.776	0		
8	RCST1	4.801	201.776	14.153	0.000	-1.482	201.776	0		
9	RCST1	6.001	201.776	14.122	0.000	-1.482	201.776	0		
10	RCST1	7.202	201.776	14.091	0.000	-1.482	201.776	0		
11	RCST1	8.402	201.776	14.060	0.000	-1.482	201.776	0		
12	RCST1	9.602	201.776	14.029	0.000	-1.482	201.776	0		
13	RCST1	10.803	201.776	13.998	0.000	-1.482	201.776	0		
14	RCST1	12.003	201.776	13.966	0.000	-1.482	201.776	0		
15	RCST1	13.203	201.776	13.935	0.000	-1.482	201.776	0		
16	RCST1	14.404	201.776	13.904	0.000	-1.482	201.776	0		
17	RCST1	15.604	201.776	13.873	0.000	-1.482	201.776	0		
18	RCST1	16.804	201.776	13.842	0.000	-1.482	201.776	0		
19	RCST1	18.004	201.776	13.811	0.000	-1.482	201.776	0		

Saving of Data

Click [Save] to save the calculation results if they are proper and useable.

6. TBM Advancing Plan (6)

Setting of Tangent Position for Target Brng Calculation

1) Straight Machine

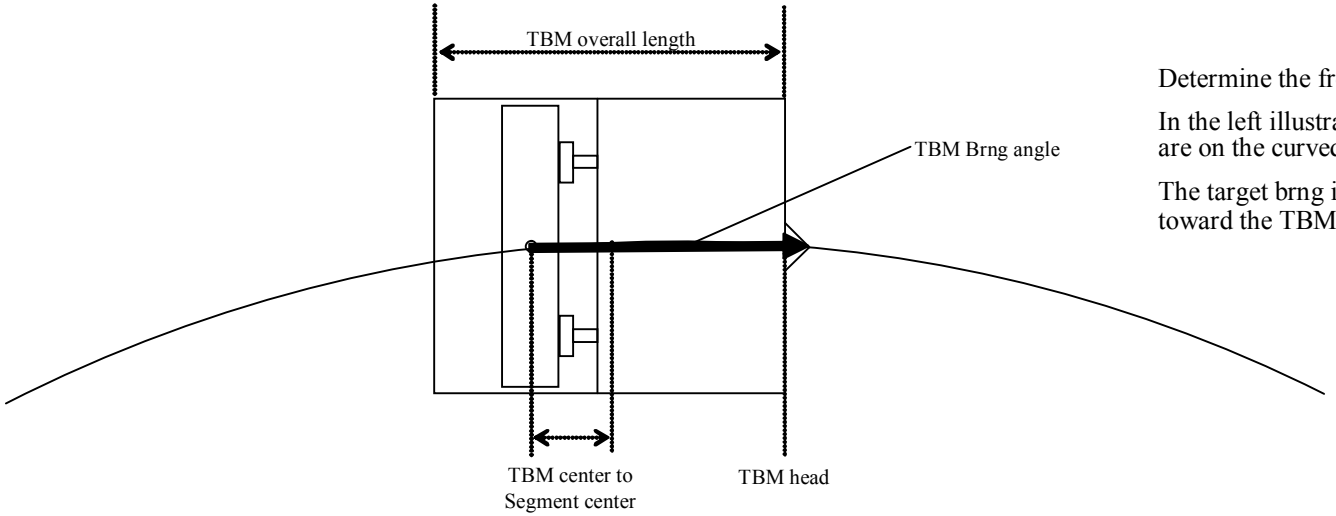

Determine the front and rear tangent positions.

In the left illustration, the TBM head and the Segment center are on the curved line.

The target brng is in the direction from the segment center toward the TBM head.

2) Articulate Machine

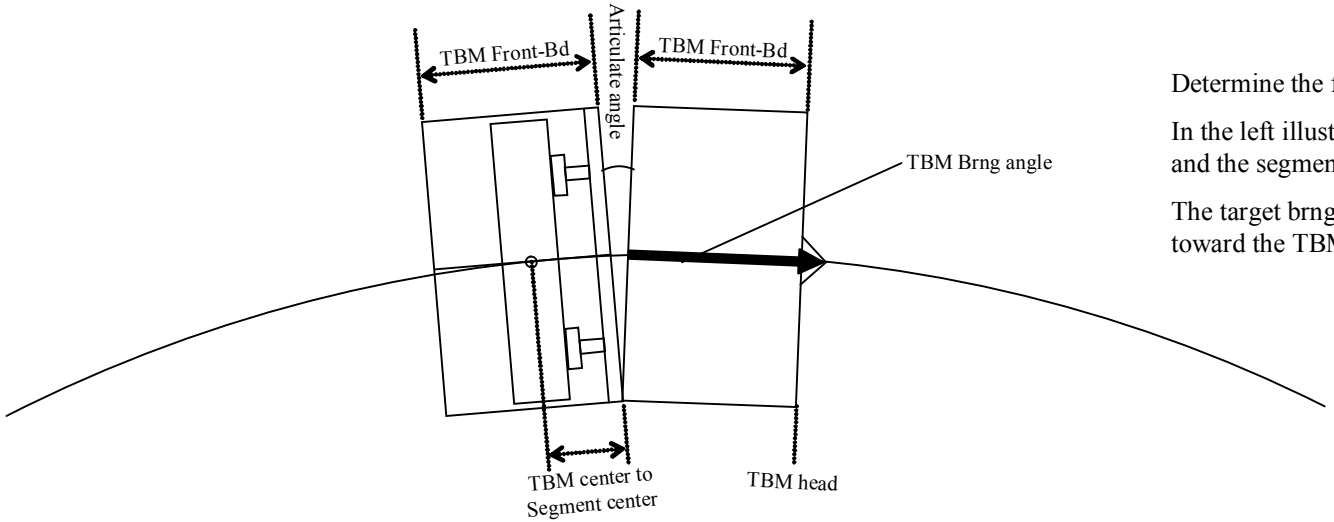

Determine the front and rear tangent positions.

In the left illustration, the TBM head, the articulate point and the segment center are on the curved line.

The target brng is in the direction from the articulate point toward the TBM head.

7. As-Build Graph

As-build Graph The screen displays the scroll-type deviation graph based on the data obtained from every survey.

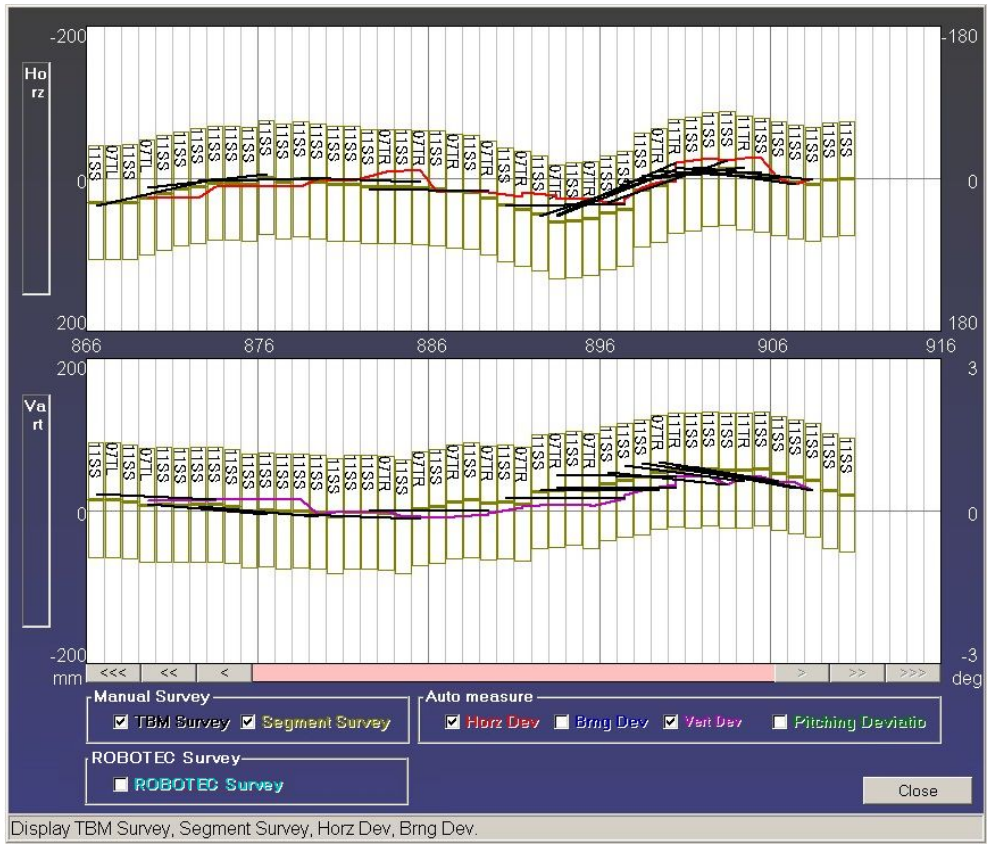

Completed amount against the Plan Alignment is displayed in the deviation graph.

The display range is adjustable.

Go to [Screen Select] → [Maintenance] → [Loop Maintenance].

Change "Upper Limit" and/or "Lower Limit" of "Horizontal Deviation" and/or "Vertical Deviation" thereof as needed.

Data in display

1) Artificial survey	TBM survey Segment survey
2) ROBOTEC Survey	ROBOTEC Survey
3) Automatic survey	Horizontal deviation Brng deviation Vertical deviation Pitching deviation

The corresponding data is displayed by clicking the check box.

The TBM survey (black line) and the Robotec survey (light blue) draw the line at the segment that corresponds to a TBM rear end and front end, for the survey data of a corresponding ring.

The corresponding data is displayed by clicking the check box.

Entire ring data are available with each item since the data are calculated on a steady basis. Note that the data may be wrong or not exist if the target values have not been calculated on the TBM Advancing Plan screen.

8. Alignment Graph (1)

Alignment Graph The screen displays the deviation on the alignment based on the data obtained from every survey.

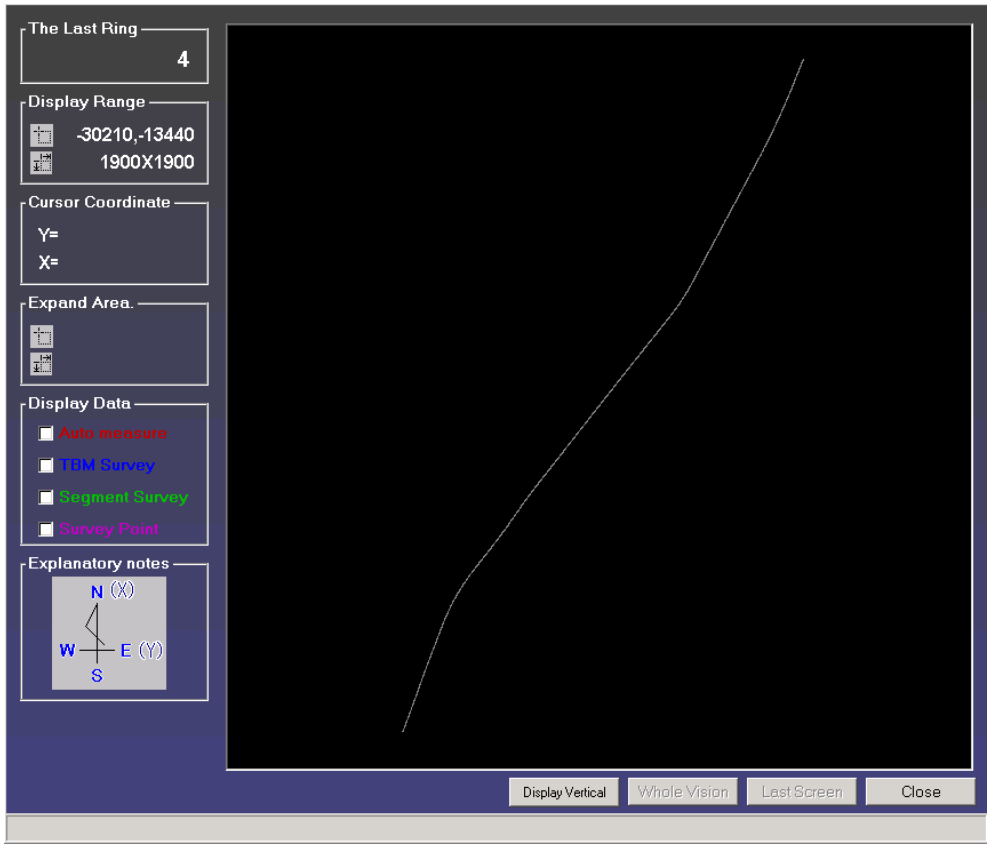

Here you can make sure the Plan Alignment and past survey data containing survey points.

Click on any point and drug the mouse to select the area to expand.

* Note that the expansion magnification is limited since it is not CAD data.

Data in display

Automatic survey
TBM survey
Segment survey
Survey point

displays the final ring to which data is available.

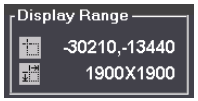

displays the upper left coordinate in the display area.

displays the distance of the area in display.

displays the position of the cursor on the display area.

Indicates an enlarged display area or the upper left coordinate during enlargement.

It displays the distance of the expanded area, or an expanding size during selection.

Tick the check box to display the corresponding data.

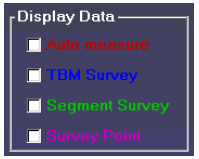

displays Automatic survey data.
displays TBM survey data.
display of Segment survey data.
display of Survey point data.

Last Screen Button to return to the last expanding screen.

Whole Vision Button to show all (back to normal screen).

Display Vertical Button to display the vertical screen.

8. Alignment Graph (2)

Display Vertical The Vertical screen is displayed.

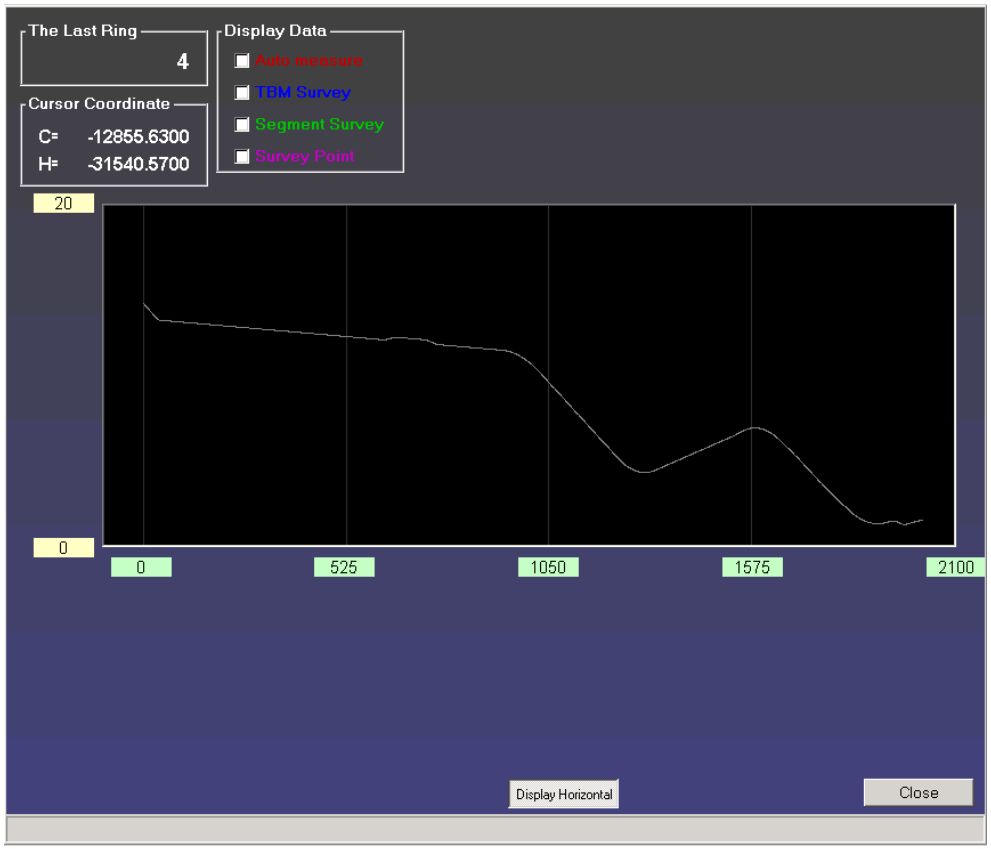

Data in display

Automatic survey
TBM survey
Segment survey
Survey point

displays the final ring to which data is available.

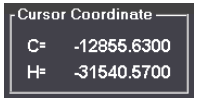

displays the position of the cursor on the display area.

C = Distance
H = Height

Tick the check box to display the corresponding data.

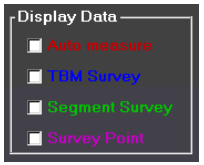

displays Automatic survey data.
displays TBM survey data.
display of Segment survey data.
display of Survey point data.

Display Horizontal Button to return to the horizontal screen.

9. Segment Type Setting

Seg Type Setting Specify every segment to be used.

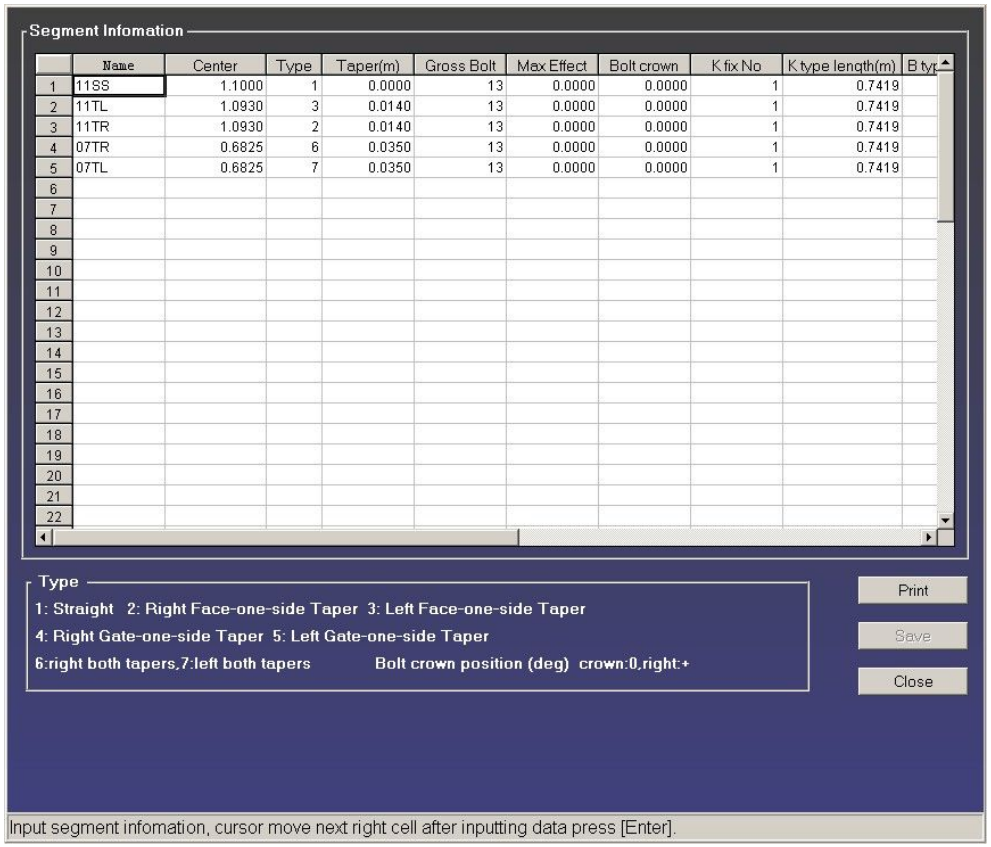

Name		Any name (not more than eight single-space alphanumeric characters and symbols)
Center length	(m)	Length of center part of the erection
Type		[See bottom left of the page]
Taper	(m)	Degree of taper
Number of bolts		Number of fixed bolts
Max. effect	(deg)	Center angle of K type in case of the largest taper
Bolt crown	(deg)	First bolt counting in clockwise direction form the top of the erection.
K fix Number		Number K type bolts
K type length	(m)	K type periphery length
B type length	(m)	B type periphery length
A type length	(m)	A type periphery length
Total pieces		Number of divided pieces
Outside diameter	(m)	Segment outside diameter
Inside diameter	(m)	Segment inside diameter (Rib inside diameter)

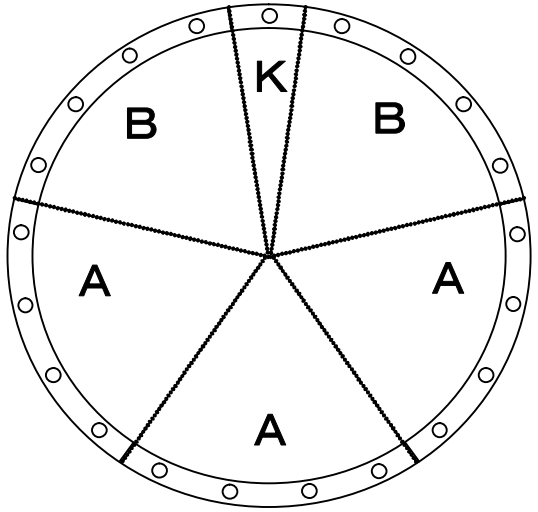

10. Calculate the Segment Position and Face (Only for ROBOTEC site.)

Seg Pos Calc View explain

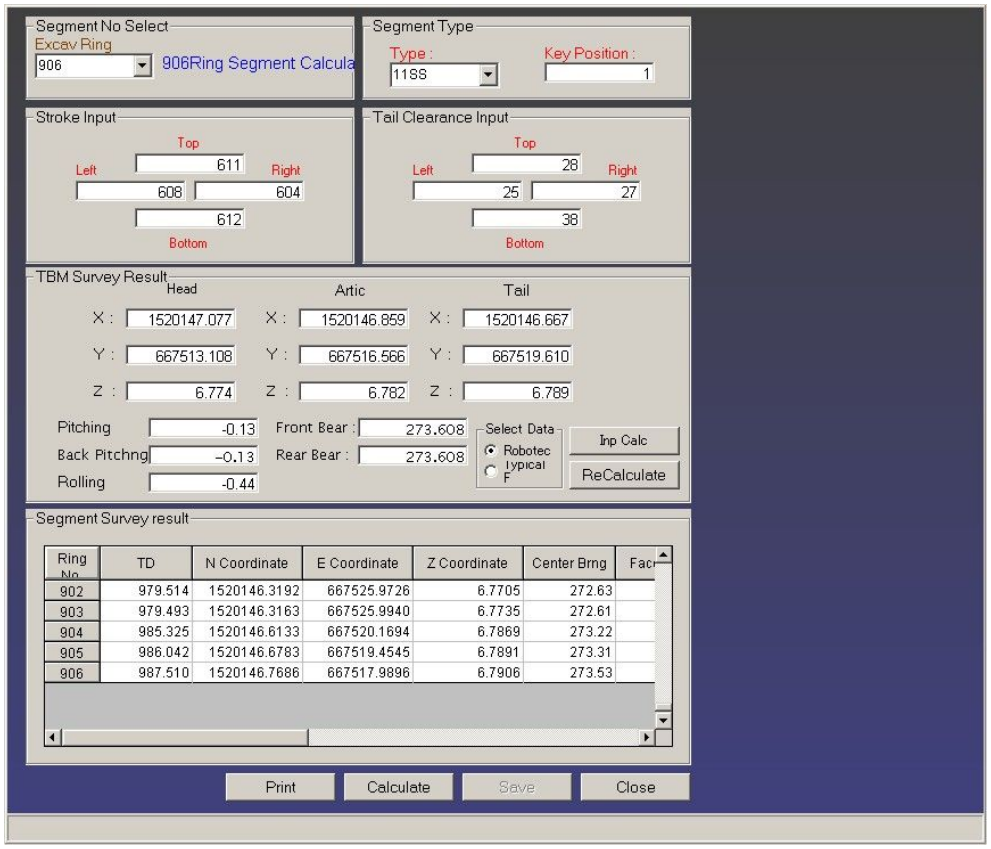

※About ReCalculate

In case of executing manual Robotec survey, after the excavation is finished, it recalculates by using the final measurement result.

How to use

A. Automatic calculate
Automatic calculate by selected segment type and K position.

B. Manual calculate
Start : when excavation finished, it shows "Jack Stroke", "Tail Clearance", and "TBM Survey Result".

Select a certain "Ring No." and "Segment Type", then input "Stroke Length", "Tail Clearance", and "TBM Coordinate".

Press Calculate to calculate.

Result

TD	(m)	Accumulation distance
X coordinate	(m)	Ahead X coordinate
Y coordinate	(m)	Ahead Y coordinate
Z coordinate	(m)	Ahead Z coordinate
Bearing	(deg)	Center bearing
Face bearing	(deg)	Center bend bearing
Bend bearing	(deg)	Face bearing
Face bend bearing	(deg)	Face bend bearing
Level deviation	(m)	Level deviation
Vertical deviation	(m)	Vertical deviation
Ahead distance	(m)	Accumulation distance from ahead
SegLeadDiff	(m)	Difference of right and left
SegPitchDiff	(m)	Difference of top and bottom
Inside diameter (horizontal)	(m)	Segment inside diameter (horizontal)
Inside diameter (vertical)	(m)	Segment inside diameter (vertical)

11. Setting the Target Relative Position–(1)

This section explains how to calculate and set the relative position of a machine securing target (prism, seal, etc.)

● **Prepare the following information:**

- Machine length
  (This is set in the system information of the ARiGATAYA Utility.)
- Absolute coordinates of the machine head (It is recommended to use ARiGATAYA Survey measurement results of the stuff method.)
- Absolute coordinates of the machine tail
  (Use the ARiGATAYA Survey calculation results.)
- Pitching and rolling values for survey (Tail pitching when the tail is secured)
- Absolute coordinates of target

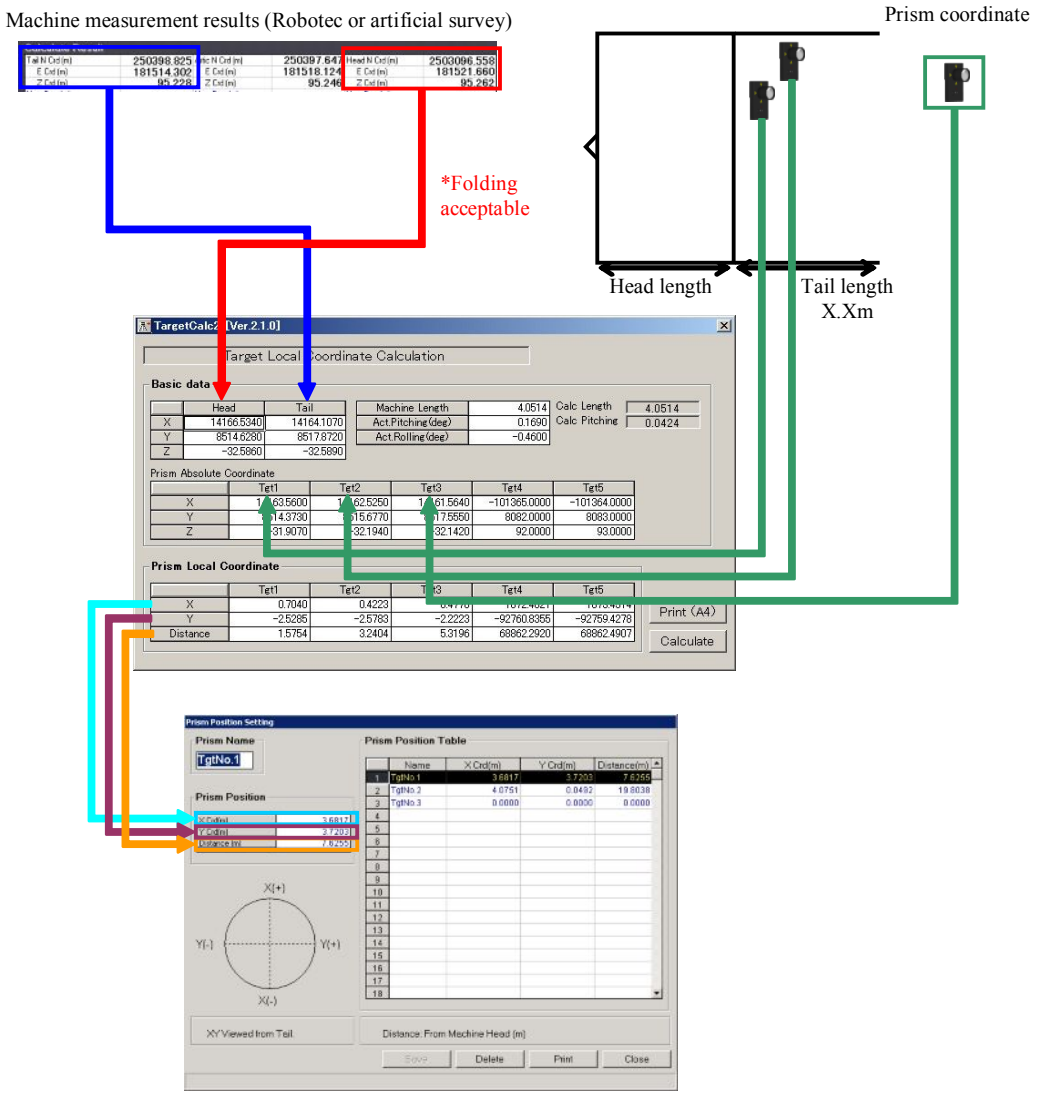

● **Using TargetCalc**

1. This depends on the input (Straight or Bent (Head, Tail): See the next page) into the Basic Data fields.

＊ The input value is used for machine length.

When the Calculate button is pressed, the machine length on the side is calculated from the coordinates.

＊ The input value is used for pitching.
＊ The input value is used for rolling.

2. Press the Calculate button.

● **Setting relative coordinates**

1. Enter the prism position based on the calculation results.

＊ Since the coordinate system differs between TargetCalc and the prism setting screen, note the following:

- Enter the value X into "X Coordinate" as it is.
- Enter the Y value into "Y Coordinate" as it is.
- Enter the distance into "Distance."
  (For folded coordinate calculation, add the head length to the input value.)

＊ Do not change the prism name from #Tgr No.＊ (＊: prism No).

2. Press the Save button.

11. Setting the Target Relative Position–(2)

●Other notes

At the calculation of machine coordinates by ARiGATAYA Survey, if the folding is extended, the folding point deviates and the relative coordinate X（prism setting screen）will not be calculated accurately. In this case, calculate the coordinate as follows:

・When the head is secured (prism) (The screw is secured on the head.)

Enter the head coordinates into "Head or Folding" of TargetCalc, and the folding coordinates into "Tail."

For the prism settings, set calculation results as usual.

・When the tail is secured (prism)

Enter the folding coordinates into "Head or Folding" of TargetCalc, and the tail coordinates into "Tail."

Add the **head length** to the **calculation result** of "Distance," subtract the quotient of "**average folding stroke / 2,** " and enter the balance for "Distance."

(See the figure at right.) (Set Y and Z as usual.)

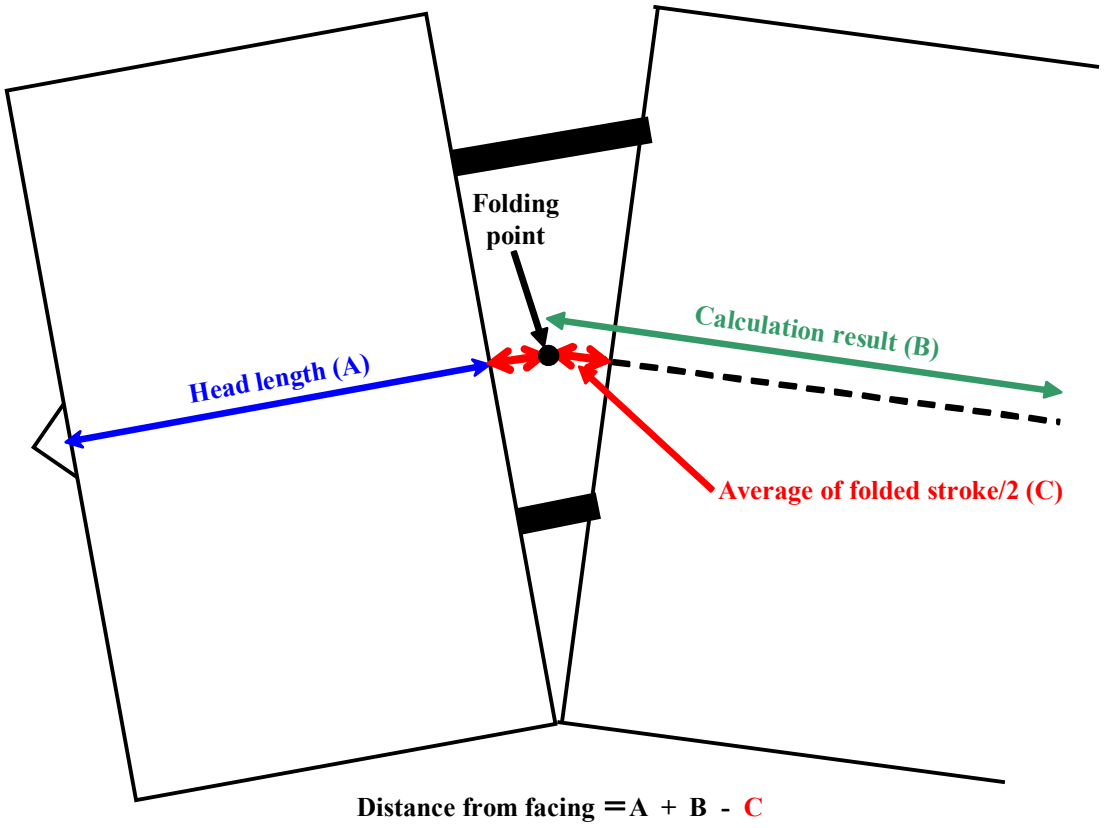

Shield tunneling method

Excavation Management System

ARiGATAYA Ver.3.0

CONTENTS

1. Print Require Page 2
2. Document Definition Page 3
3. Document Printout Samples Page 4

The ARiGATAYA Ver.3.0 System, composed of the software and various associated hardware, treats the measurement values (especially concerned with the measurement hardware) on the premise that they are true and correct. It is, therefore, necessary that the measurement hardware kept in optimum condition is always used.
We assume no responsibility for any damages resulting from the use of the System or for the damages previously informed by us as well as damages, loss, and harm caused to the User.
The copyright of this manual belongs to enzan koubou Co., Ltd. It is strictly prohibited to duplicate, distribute, and disclose the content without our prior approval. Any content of this website may neither be duplicated nor distributed without prior approval.

1. Print Require

Screen for printout operation.
Select [Screen Select] → [Control] → [Document Print] to go to the screen.

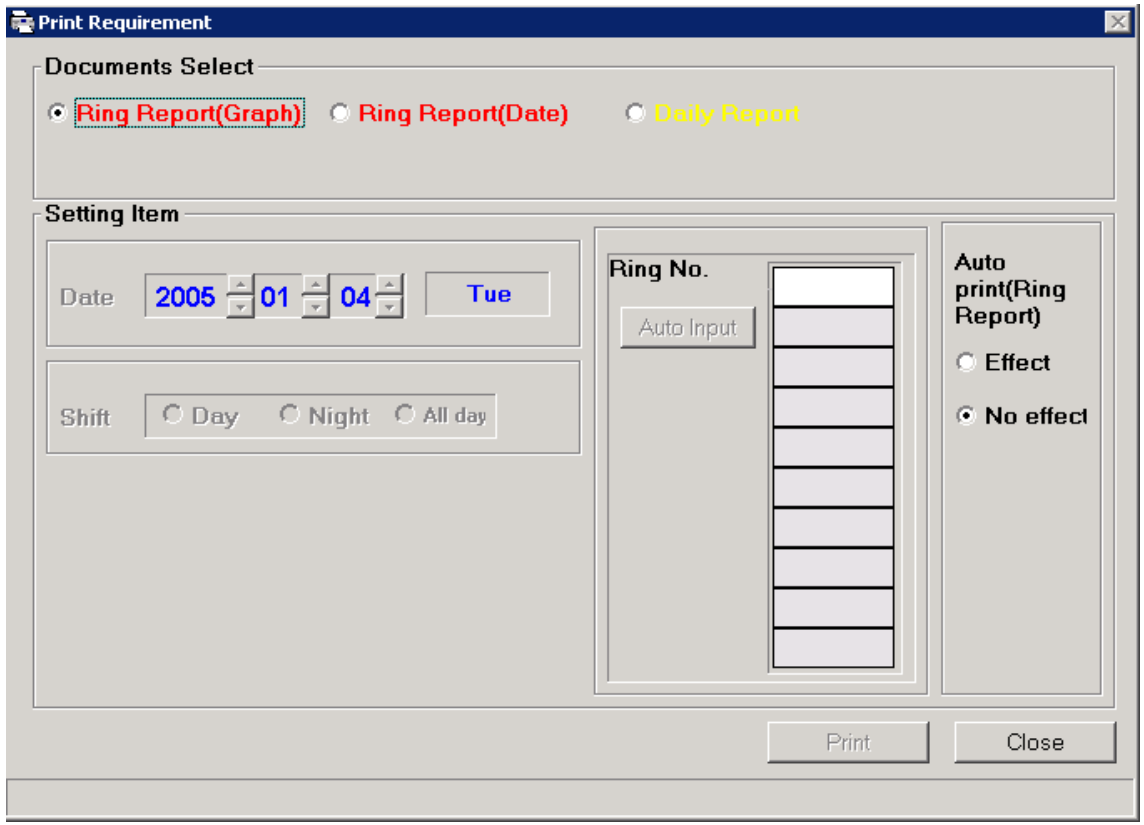

For Ring Report, enter the ring number.

For Daily Report, enter the date.

Then, enter the excavation ring No. of the certain day.

Or click Auto Input to import the excavation ring of that day from the daily ring file.

Print button for direct output to the printer.

The ring report (graph format) is automatically printed out when excavation finishes.

2. Document Definition

Screen for setting the print items of each document.
Select [Screen Select] → [Maintenance] → [Document Definition] to go to the screen.

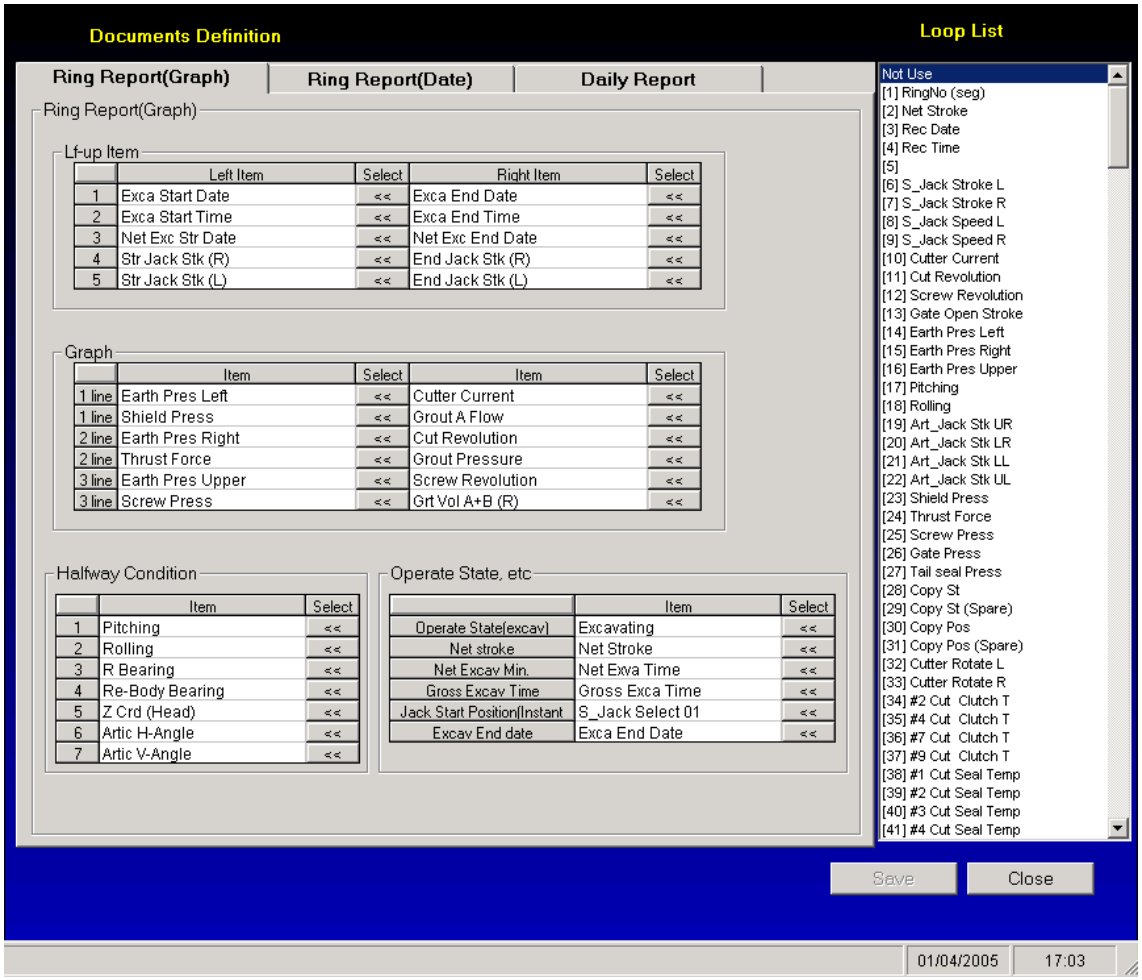

Select a document to be replaced in the Document Type.

[Ring Report (Graphic format), Ring Report (Data format), and Daily Report]

Select a item in the right list, using << button.

In the "Daily Report" tab, when checking "Calculation" box, you can make it display the total of them.

Note: Items of some certain documents are fixed because of the program requirement.

3. Document Printout Samples

Ring Report (Data format) Printout

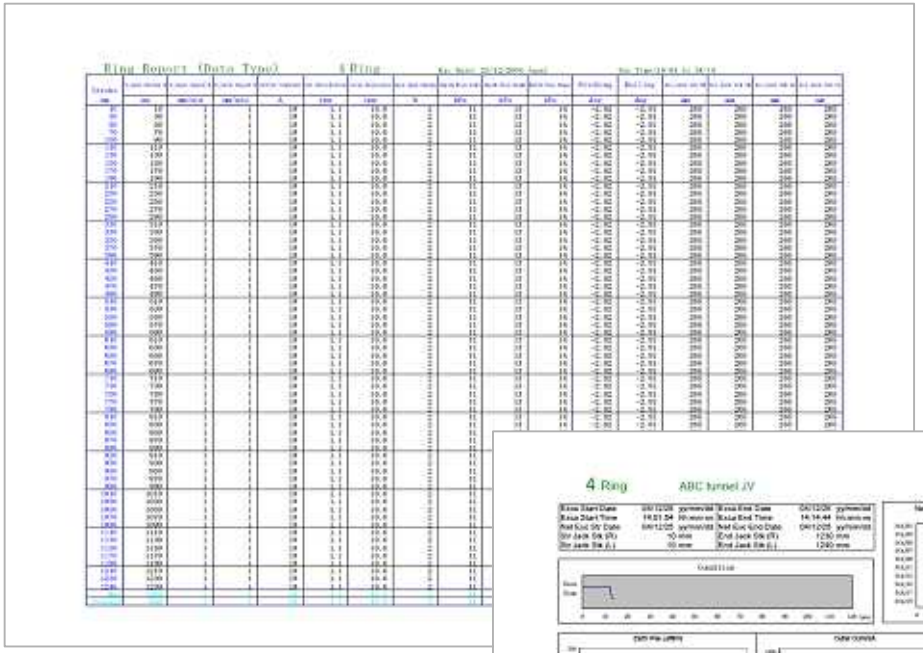

Daily Report Printout

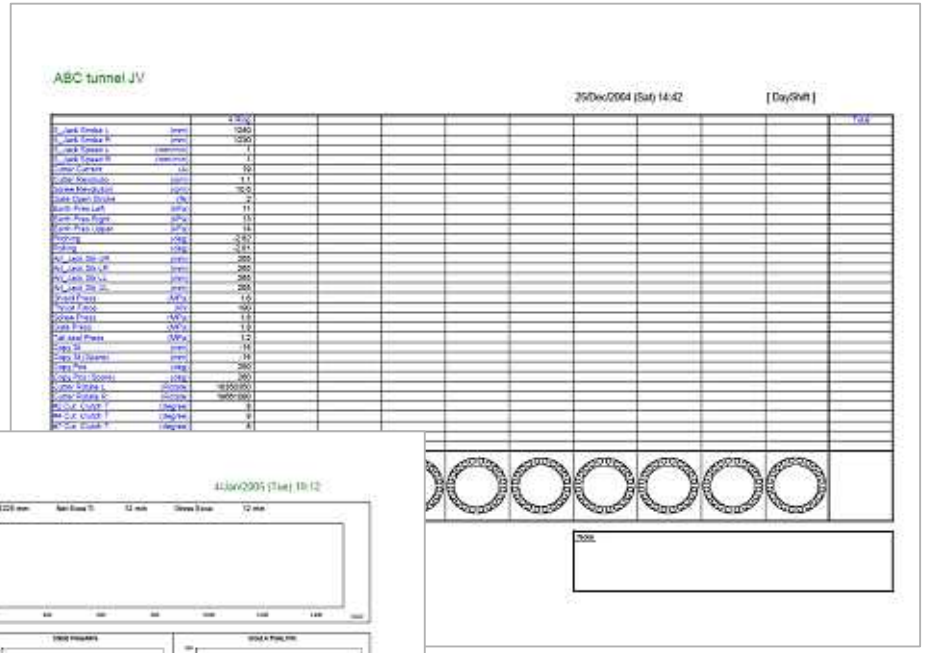

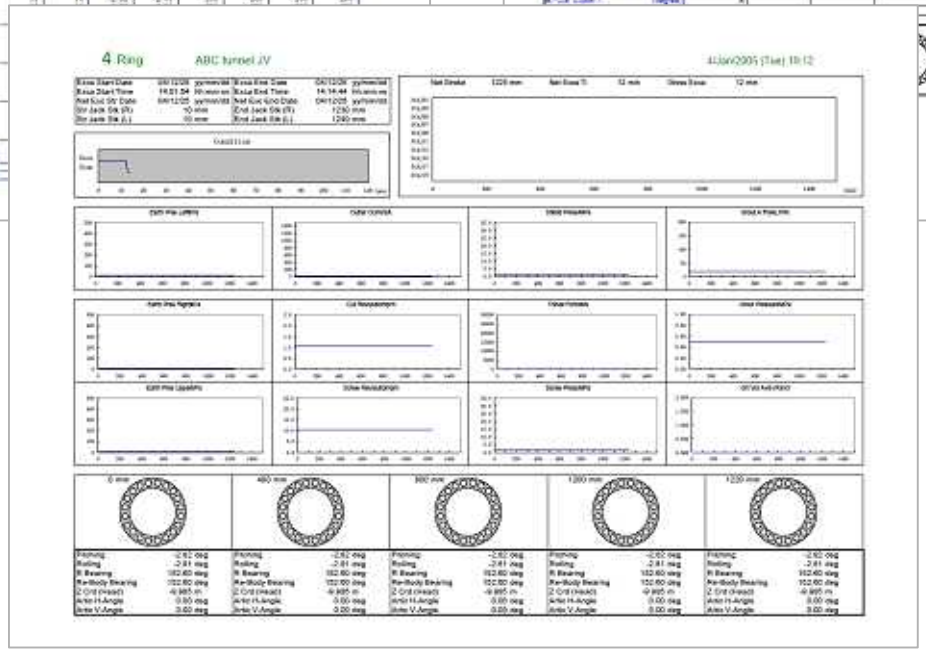

Ring Report (Graphic format) Printout

Shield tunneling method

Excavation Management System

ARiGATAYA Ver.3.0

CONTENTS

About Maintenance Items Page 2

1. Ring Detail File Maintenance Page 3
2. Ring Typical File Maintenance Page 4
3. Time Series File Maintenance Page 5
4. Daily File Maintenance Page 6
5. Survey Point File Maintenance Page 7
6. Machine Survey File Maintenance Page 8
7. Segment Survey File Maintenance Page 9
8. Operation History Page 10

The ARiGATAYA Ver.3.0 System, composed of the software and various associated hardware, treats the measurement values (especially concerned with the measurement hardware) on the premise that they are true and correct. It is, therefore, necessary that the measurement hardware kept in optimum condition is always used.
We assume no responsibility for any damages resulting from the use of the System or for the damages previously informed by us as well as damages, loss, and harm caused to the User.
The copyright of this manual belongs to enzan koubou Co., Ltd. It is strictly prohibited to duplicate, distribute, and disclose the content without our prior approval. Any content of this website may neither be duplicated nor distributed without prior approval.

About Maintenance Items

It is intended to maintain the recorded data.

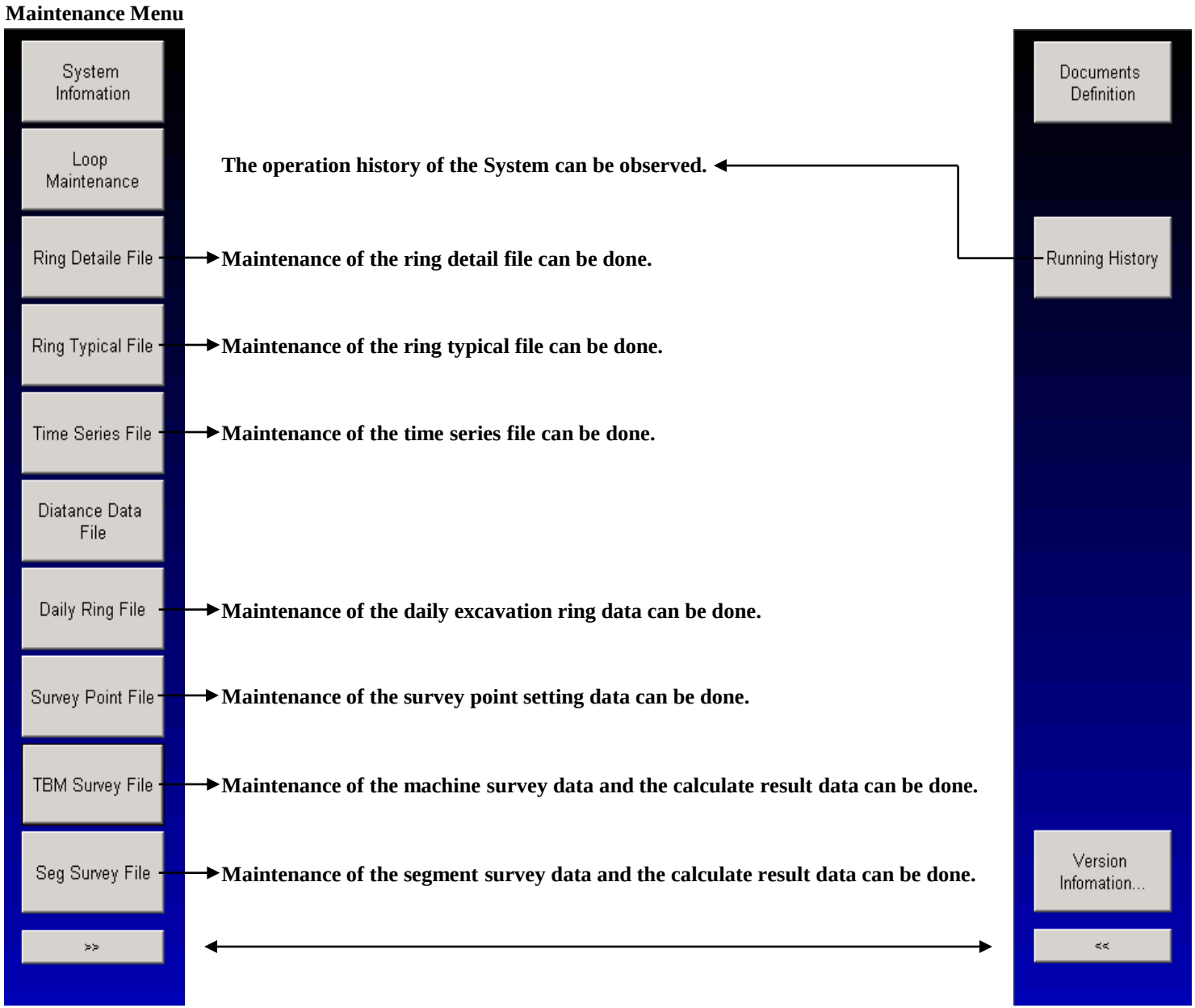

1. Ring Detail File Maintenance

Maintenance of the ring-by-ring detail data file can be done on this screen.

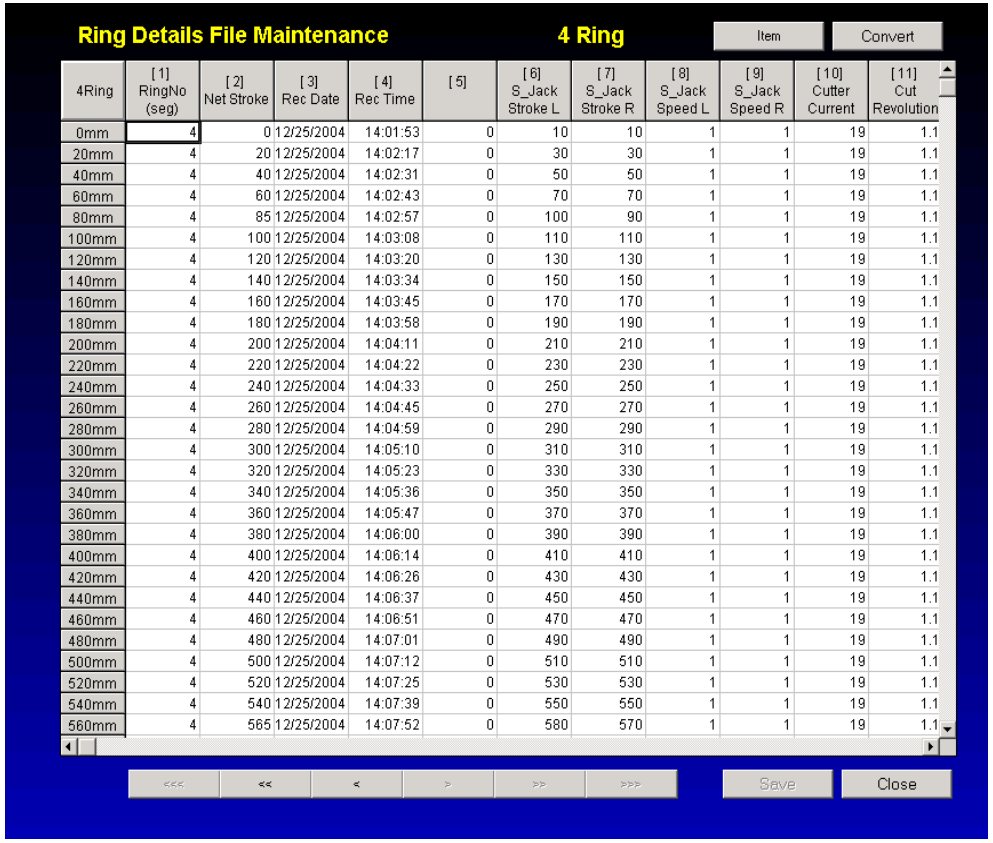

4Ring	[1] RingNo (seg)	[2] Net Stroke	[3] Rec Date	[4] Rec Time	[5]	[6] S_Jack Stroke L	[7] S_Jack Stroke R	[8] S_Jack Speed L	[9] S_Jack Speed R	[10] Cutter Current	[11] Cut Revolution
0mm	4	0	12/25/2004	14:01:53	0	10	10	1	1	19	1.1
20mm	4	20	12/25/2004	14:02:17	0	30	30	1	1	19	1.1
40mm	4	40	12/25/2004	14:02:31	0	50	50	1	1	19	1.1
60mm	4	60	12/25/2004	14:02:43	0	70	70	1	1	19	1.1
80mm	4	85	12/25/2004	14:02:57	0	100	90	1	1	19	1.1
100mm	4	100	12/25/2004	14:03:08	0	110	110	1	1	19	1.1
120mm	4	120	12/25/2004	14:03:20	0	130	130	1	1	19	1.1
140mm	4	140	12/25/2004	14:03:34	0	150	150	1	1	19	1.1
160mm	4	160	12/25/2004	14:03:45	0	170	170	1	1	19	1.1
180mm	4	180	12/25/2004	14:03:58	0	190	190	1	1	19	1.1
200mm	4	200	12/25/2004	14:04:11	0	210	210	1	1	19	1.1
220mm	4	220	12/25/2004	14:04:22	0	230	230	1	1	19	1.1
240mm	4	240	12/25/2004	14:04:33	0	250	250	1	1	19	1.1
260mm	4	260	12/25/2004	14:04:45	0	270	270	1	1	19	1.1
280mm	4	280	12/25/2004	14:04:59	0	290	290	1	1	19	1.1
300mm	4	300	12/25/2004	14:05:10	0	310	310	1	1	19	1.1
320mm	4	320	12/25/2004	14:05:23	0	330	330	1	1	19	1.1
340mm	4	340	12/25/2004	14:05:36	0	350	350	1	1	19	1.1
360mm	4	360	12/25/2004	14:05:47	0	370	370	1	1	19	1.1
380mm	4	380	12/25/2004	14:06:00	0	390	390	1	1	19	1.1
400mm	4	400	12/25/2004	14:06:14	0	410	410	1	1	19	1.1
420mm	4	420	12/25/2004	14:06:26	0	430	430	1	1	19	1.1
440mm	4	440	12/25/2004	14:06:37	0	450	450	1	1	19	1.1
460mm	4	460	12/25/2004	14:06:51	0	470	470	1	1	19	1.1
480mm	4	480	12/25/2004	14:07:01	0	490	490	1	1	19	1.1
500mm	4	500	12/25/2004	14:07:12	0	510	510	1	1	19	1.1
520mm	4	520	12/25/2004	14:07:25	0	530	530	1	1	19	1.1
540mm	4	540	12/25/2004	14:07:39	0	550	550	1	1	19	1.1
560mm	4	565	12/25/2004	14:07:52	0	580	570	1	1	19	1.1

The data are stored in a ring-by-ring basis.

Jump-back buttons:

<<< : 100 rings << : 10 rings* < : 1 ring

Jump-forward buttons:

>>> : 100 rings >> : 10 rings* > : 1 ring

Clicking Item shows the window below, through which data can be rearranged in any order.

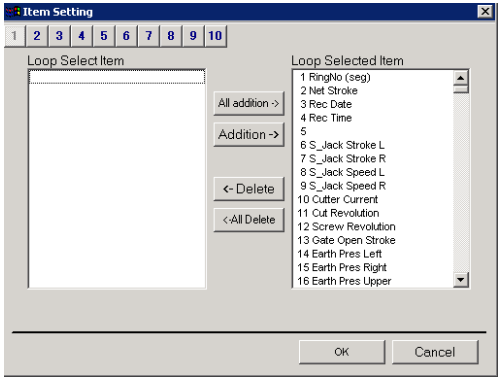

Select items in the right list and add in the left selection list in order of preference.

Click Save after data input or revision is complete.

Convert button is used to convert the file into CSV format.

The file is converted and saved as follows.

D:¥ARiGATAYA¥TextRing¥nnnnn¥Rnnnnα.Csv

2. Ring Typical File Maintenance

Maintenance of the typical data file can be done on this screen.

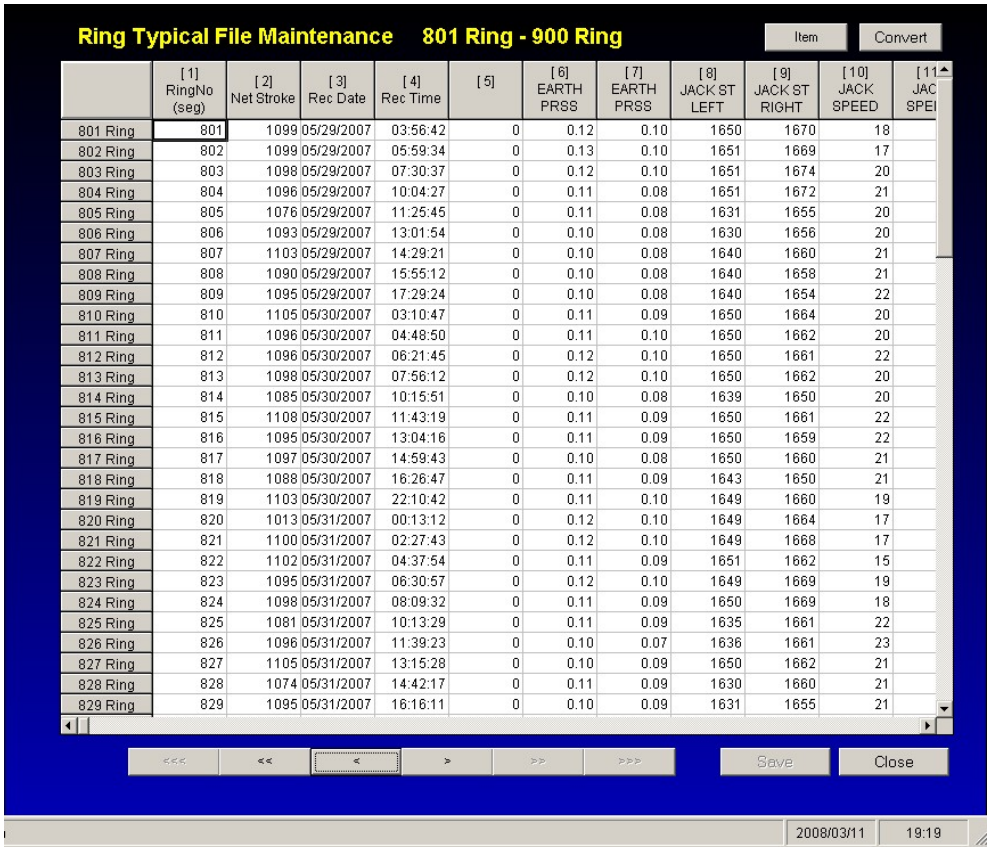

	[1] RingNo (seg)	[2] Net Stroke	[3] Rec Date	[4] Rec Time	[5]	[6] EARTH PRSS	[7] EARTH PRSS	[8] JACK ST LEFT	[9] JACK ST RIGHT	[10] JACK SPEED	[11] JAC SPEI
801 Ring	801	1099	05/29/2007	03:56:42	0	0.12	0.10	1650	1670	18	
802 Ring	802	1099	05/29/2007	05:59:34	0	0.13	0.10	1651	1669	17	
803 Ring	803	1098	05/29/2007	07:30:37	0	0.12	0.10	1651	1674	20	
804 Ring	804	1096	05/29/2007	10:04:27	0	0.11	0.08	1651	1672	21	
805 Ring	805	1076	05/29/2007	11:25:45	0	0.11	0.08	1631	1655	20	
806 Ring	806	1093	05/29/2007	13:01:54	0	0.10	0.08	1630	1656	20	
807 Ring	807	1103	05/29/2007	14:29:21	0	0.10	0.08	1640	1660	21	
808 Ring	808	1090	05/29/2007	15:55:12	0	0.10	0.08	1640	1658	21	
809 Ring	809	1095	05/29/2007	17:29:24	0	0.10	0.08	1640	1654	22	
810 Ring	810	1105	05/30/2007	03:10:47	0	0.11	0.09	1650	1664	20	
811 Ring	811	1096	05/30/2007	04:48:50	0	0.11	0.10	1650	1662	20	
812 Ring	812	1096	05/30/2007	06:21:45	0	0.12	0.10	1650	1661	22	
813 Ring	813	1098	05/30/2007	07:56:12	0	0.12	0.10	1650	1662	20	
814 Ring	814	1085	05/30/2007	10:15:51	0	0.10	0.08	1639	1650	20	
815 Ring	815	1108	05/30/2007	11:43:19	0	0.11	0.09	1650	1661	22	
816 Ring	816	1095	05/30/2007	13:04:16	0	0.11	0.09	1650	1659	22	
817 Ring	817	1097	05/30/2007	14:59:43	0	0.10	0.08	1650	1660	21	
818 Ring	818	1088	05/30/2007	16:26:47	0	0.11	0.09	1643	1650	21	
819 Ring	819	1103	05/30/2007	22:10:42	0	0.11	0.10	1649	1660	19	
820 Ring	820	1013	05/31/2007	00:13:12	0	0.12	0.10	1649	1664	17	
821 Ring	821	1100	05/31/2007	02:27:43	0	0.12	0.10	1649	1668	17	
822 Ring	822	1102	05/31/2007	04:37:54	0	0.11	0.09	1651	1662	15	
823 Ring	823	1095	05/31/2007	06:30:57	0	0.12	0.10	1649	1669	19	
824 Ring	824	1098	05/31/2007	08:09:32	0	0.11	0.09	1650	1669	18	
825 Ring	825	1081	05/31/2007	10:13:29	0	0.11	0.09	1635	1661	22	
826 Ring	826	1096	05/31/2007	11:39:23	0	0.10	0.07	1636	1661	23	
827 Ring	827	1105	05/31/2007	13:15:28	0	0.10	0.09	1650	1662	21	
828 Ring	828	1074	05/31/2007	14:42:17	0	0.11	0.09	1630	1660	21	
829 Ring	829	1095	05/31/2007	16:16:11	0	0.10	0.09	1631	1655	21	

The data are stored in units of entire rings.

Jump-back buttons:

<< : 1000 rings < : 100 rings

Jump-forward buttons:

>> : 1000 rings > : 100 rings

Clicking Item shows the window below, through which data can be rearranged in any order.

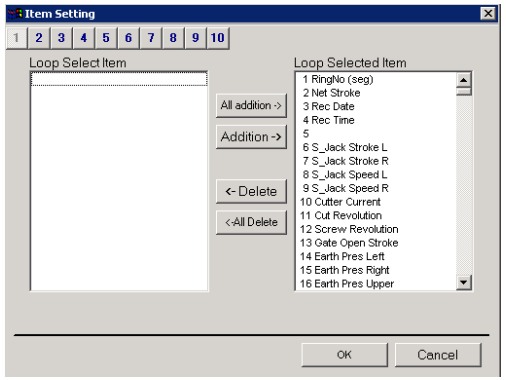

Select items in the right list and add in the left selection list in order of preference.

Click Save after data input or revision is complete.

Convert button is used to convert the file into CSV format.

The file is converted and saved as follows.
D:¥ARiGATAYA¥TextRepo¥Reportα.Csv

3. Time Series File Maintenance

Maintenance of the time series data file can be done on this screen.

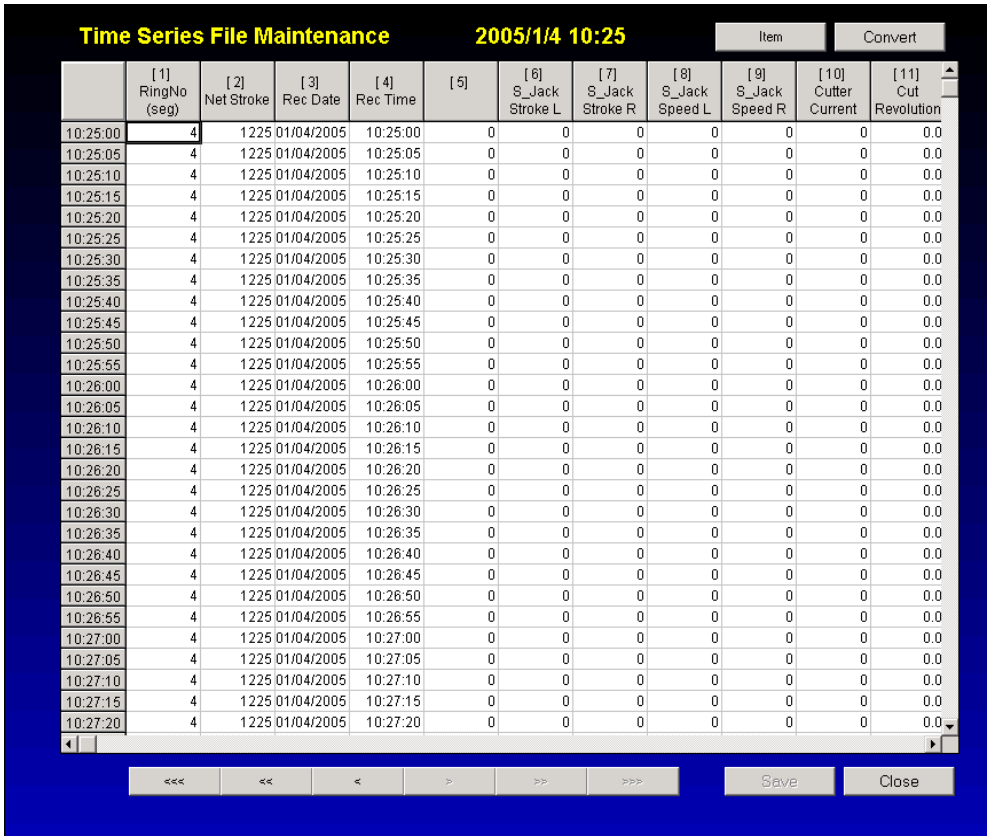

The data are saved on a day-by-day basis.

Jump-back buttons:

<<< : 1 day << : 1 hour* < : 5 minutes

Jump-forward buttons:

>>> : 1 day >> : 1 hour* > : 5 minutes

Clicking Item shows the window below, through which data can be rearranged in any order.

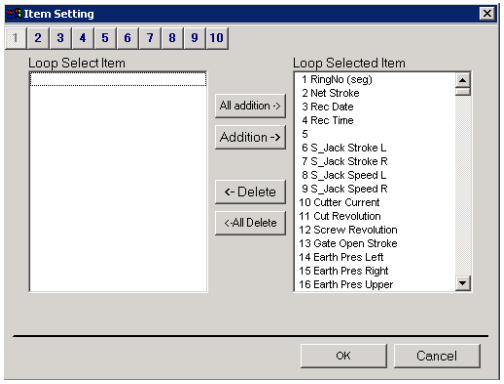

Select items in the right list and add in the left selection list in order of preference.

Click Save after data input or revision is complete.

Convert button is used to convert the file into CSV format.

The file is converted and saved as follows.

D:¥ARiGATAYA¥TextRepo¥Hyyyy.mm.dd.Csv

4. Daily File Maintenance

Maintenance of the daily excavation result ring No. file can be done on this screen.

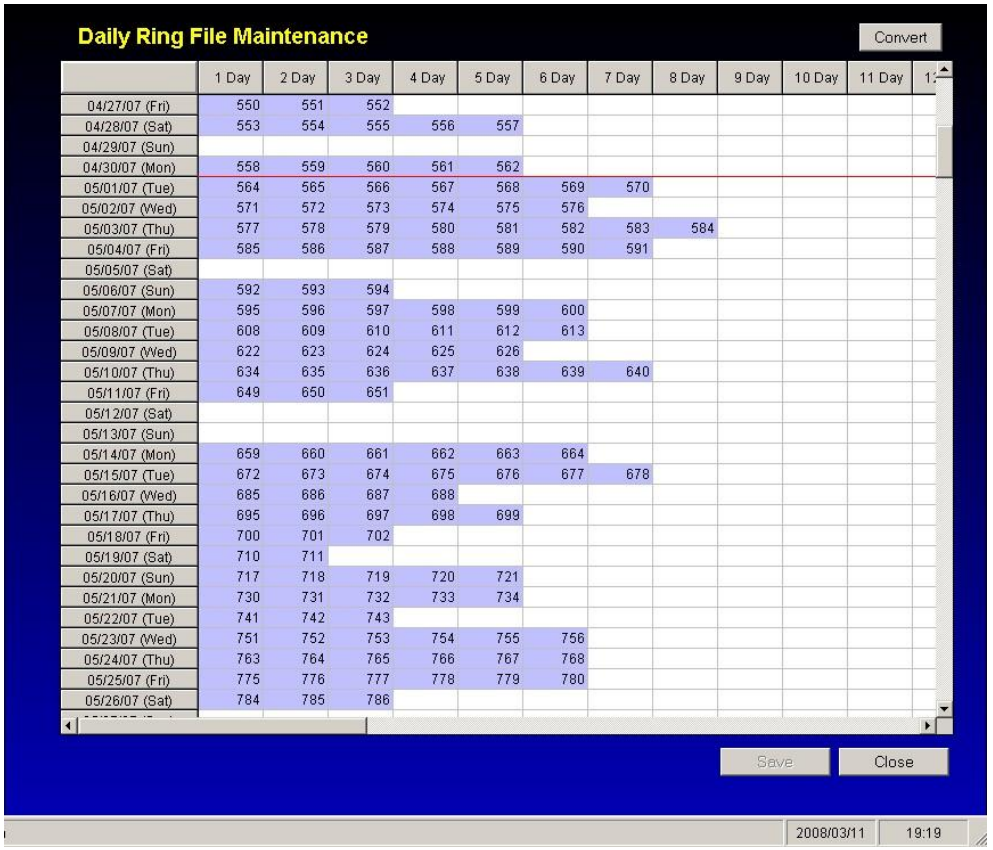

	1 Day	2 Day	3 Day	4 Day	5 Day	6 Day	7 Day	8 Day	9 Day	10 Day	11 Day
04/27/07 (Fri)	550	551	552								
04/28/07 (Sat)	553	554	555	556	557						
04/29/07 (Sun)											
04/30/07 (Mon)	558	559	560	561	562						
05/01/07 (Tue)	564	565	566	567	568	569	570				
05/02/07 (Wed)	571	572	573	574	575	576					
05/03/07 (Thu)	577	578	579	580	581	582	583	584			
05/04/07 (Fri)	585	586	587	588	589	590	591				
05/05/07 (Sat)											
05/06/07 (Sun)	592	593	594								
05/07/07 (Mon)	595	596	597	598	599	600					
05/08/07 (Tue)	608	609	610	611	612	613					
05/09/07 (Wed)	622	623	624	625	626						
05/10/07 (Thu)	634	635	636	637	638	639	640				
05/11/07 (Fri)	649	650	651								
05/12/07 (Sat)											
05/13/07 (Sun)											
05/14/07 (Mon)	659	660	661	662	663	664					
05/15/07 (Tue)	672	673	674	675	676	677	678				
05/16/07 (Wed)	685	686	687	688							
05/17/07 (Thu)	695	696	697	698	699						
05/18/07 (Fri)	700	701	702								
05/19/07 (Sat)	710	711									
05/20/07 (Sun)	717	718	719	720	721						
05/21/07 (Mon)	730	731	732	733	734						
05/22/07 (Tue)	741	742	743								
05/23/07 (Wed)	751	752	753	754	755	756					
05/24/07 (Thu)	763	764	765	766	767	768					
05/25/07 (Fri)	775	776	777	778	779	780					
05/26/07 (Sat)	784	785	786								

The data are stored by the day, the day-shift and the night-shift.

(The night-shift data, on the right of the day-shift data in the table, are not visible.)

Click Save after data input or revision is complete.

Convert button is used to convert the file into CSV format.

The file is converted and saved as follows.

D:¥ARiGATAYA¥TextRepo¥DateRing.Csv

5. Survey Point File Maintenance

Maintenance of the survey point setting file can be done on this screen.

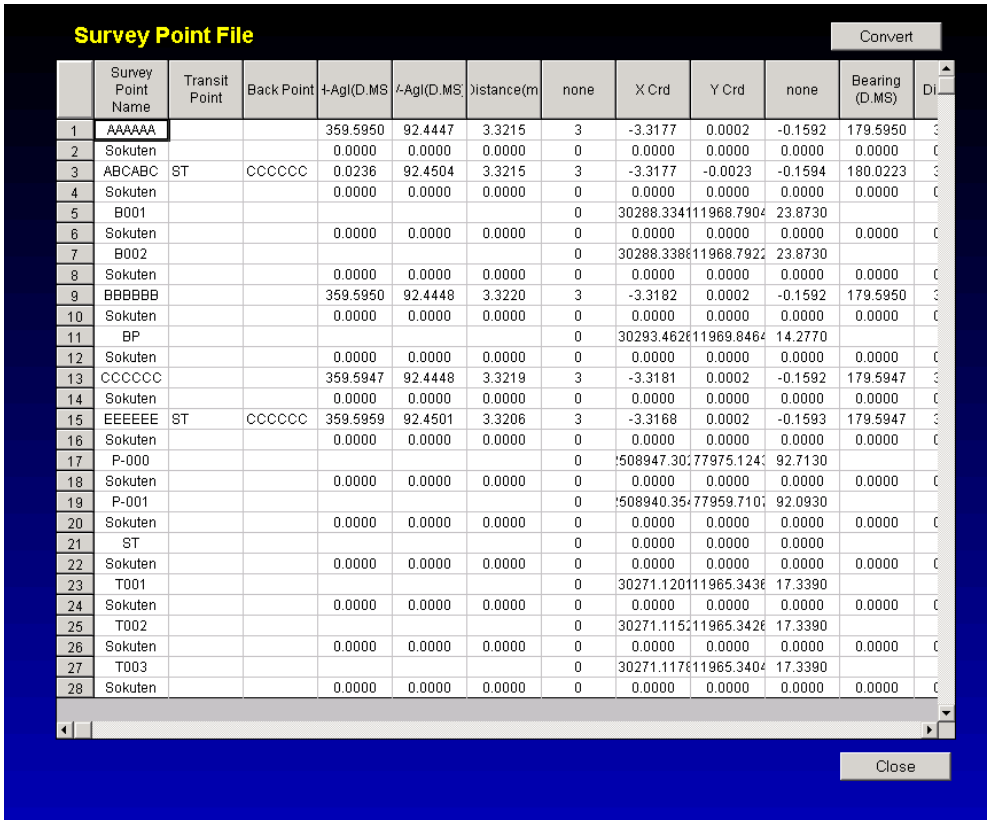

	Survey Point Name	Transit Point	Back Point	H-Agl(D.MS	V-Agl(D.MS)	Distance(m	none	X Crd	Y Crd	none	Bearing (D.MS)	Di
1	AAAAAA			359.5950	92.4447	3.3215	3	-3.3177	0.0002	-0.1592	179.5950	3
2	Sokuten			0.0000	0.0000	0.0000	0	0.0000	0.0000	0.0000	0.0000	0
3	ABCABC	ST	CCCCCC	0.0236	92.4504	3.3215	3	-3.3177	-0.0023	-0.1594	180.0223	3
4	Sokuten			0.0000	0.0000	0.0000	0	0.0000	0.0000	0.0000	0.0000	0
5	B001						0	30288.334	11968.7904	23.8730		
6	Sokuten			0.0000	0.0000	0.0000	0	0.0000	0.0000	0.0000	0.0000	0
7	B002						0	30288.338	11968.7922	23.8730		
8	Sokuten			0.0000	0.0000	0.0000	0	0.0000	0.0000	0.0000	0.0000	0
9	BBBBBB			359.5950	92.4448	3.3220	3	-3.3182	0.0002	-0.1592	179.5950	3
10	Sokuten			0.0000	0.0000	0.0000	0	0.0000	0.0000	0.0000	0.0000	0
11	BP						0	30293.462	11969.8464	14.2770		
12	Sokuten			0.0000	0.0000	0.0000	0	0.0000	0.0000	0.0000	0.0000	0
13	CCCCCC			359.5947	92.4448	3.3219	3	-3.3181	0.0002	-0.1592	179.5947	3
14	Sokuten			0.0000	0.0000	0.0000	0	0.0000	0.0000	0.0000	0.0000	0
15	EEEEEE	ST	CCCCCC	359.5959	92.4501	3.3206	3	-3.3168	0.0002	-0.1593	179.5947	3
16	Sokuten			0.0000	0.0000	0.0000	0	0.0000	0.0000	0.0000	0.0000	0
17	P-000						0	508947.302	77975.1243	92.7130		
18	Sokuten			0.0000	0.0000	0.0000	0	0.0000	0.0000	0.0000	0.0000	0
19	P-001						0	508940.354	77959.7101	92.0930		
20	Sokuten			0.0000	0.0000	0.0000	0	0.0000	0.0000	0.0000	0.0000	0
21	ST						0	0.0000	0.0000	0.0000		
22	Sokuten			0.0000	0.0000	0.0000	0	0.0000	0.0000	0.0000	0.0000	0
23	T001						0	30271.120	11965.3436	17.3390		
24	Sokuten			0.0000	0.0000	0.0000	0	0.0000	0.0000	0.0000	0.0000	0
25	T002						0	30271.115	11965.3426	17.3390		
26	Sokuten			0.0000	0.0000	0.0000	0	0.0000	0.0000	0.0000	0.0000	0
27	T003						0	30271.117	11965.3404	17.3390		
28	Sokuten			0.0000	0.0000	0.0000	0	0.0000	0.0000	0.0000	0.0000	0

Click Save after data input or revision is complete.

Convert button is used to convert the file into CSV format.

The file is converted and saved as follows.

D:¥ARiGATAYA¥TextRepo¥Sokuten.Csv

6. Machine Survey File Maintenance

Maintenance of the machine survey file and the calculate result file can be done on this screen.

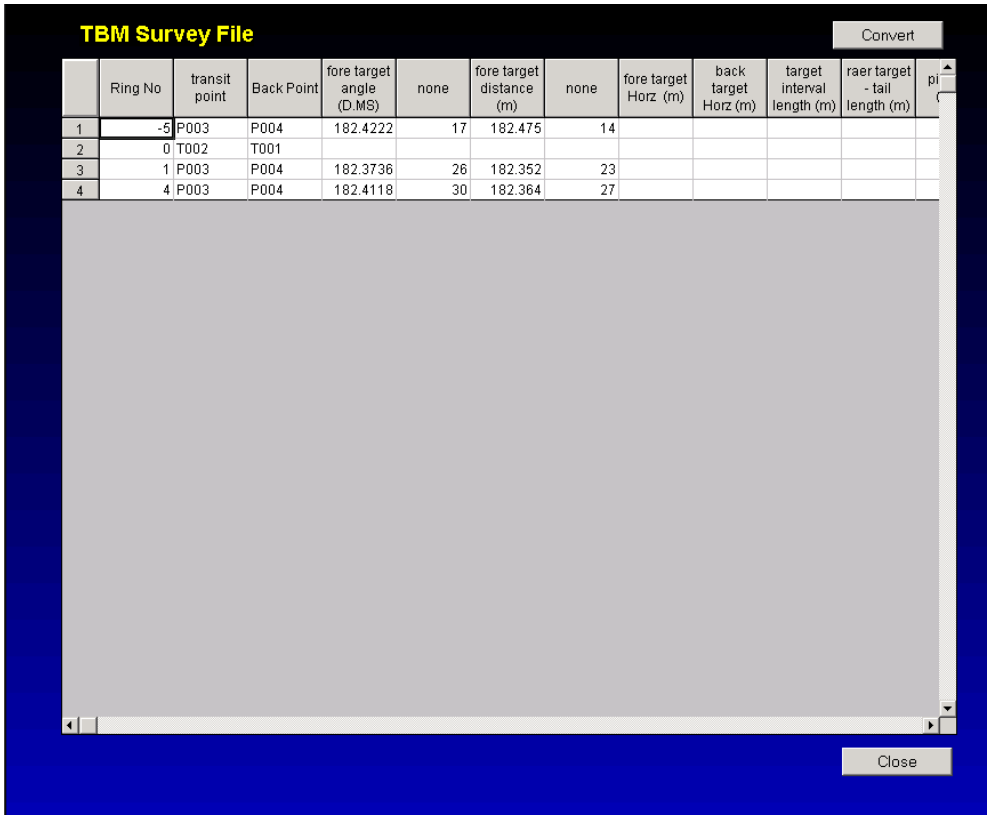

	Ring No	transit point	Back Point	fore target angle (D.MS)	none	fore target distance (m)	none	fore target Horz (m)	back target Horz (m)	target interval length (m)	raer target - tail length (m)	pi
1	-5	P003	P004	182.4222	17	182.475	14					
2	0	T002	T001									
3	1	P003	P004	182.3736	26	182.352	23					
4	4	P003	P004	182.4118	30	182.364	27					

Click Save after data input or revision is complete.

Convert button is used to convert the file into CSV format.

The file is converted and saved as follows.

D:¥ARiGATAYA¥TextRepo¥MchnSrv.Csv

7. Segment Survey File Maintenance

Maintenance of the segment survey file and the calculate result file can be done on this screen.

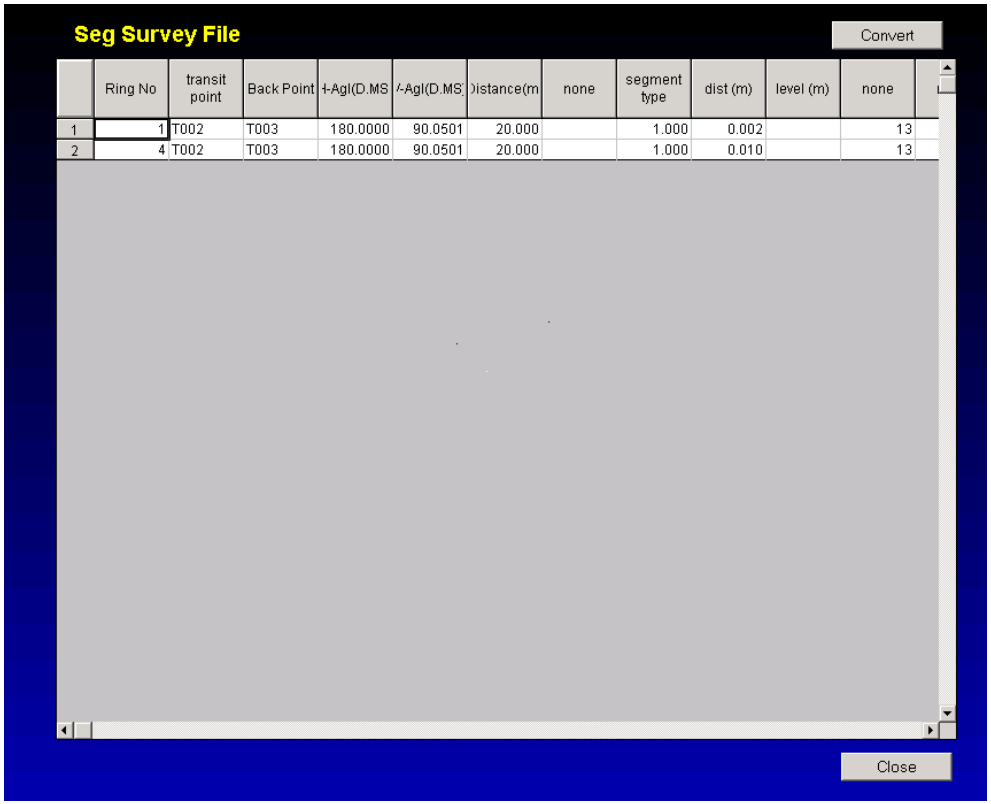

Click Save after data input or revision is complete.

Convert button is used to convert the file into CSV format.

The file is converted and saved as follows.

D:¥ARiGATAYA¥TextRepo¥SgmtSrv.Csv

8. Operation History

The operation history of the System can be observed on this screen.

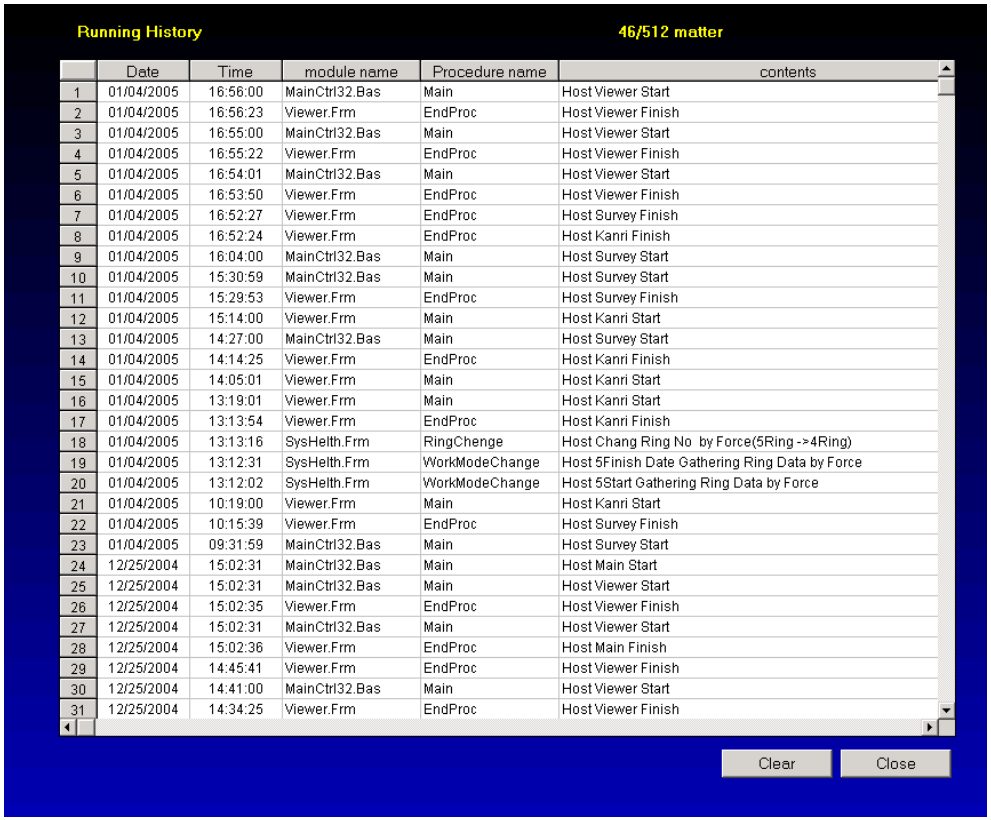

	Date	Time	module name	Procedure name	contents
1	01/04/2005	16:56:00	MainCtrl32.Bas	Main	Host Viewer Start
2	01/04/2005	16:56:23	Viewer.Frm	EndProc	Host Viewer Finish
3	01/04/2005	16:55:00	MainCtrl32.Bas	Main	Host Viewer Start
4	01/04/2005	16:55:22	Viewer.Frm	EndProc	Host Viewer Finish
5	01/04/2005	16:54:01	MainCtrl32.Bas	Main	Host Viewer Start
6	01/04/2005	16:53:50	Viewer.Frm	EndProc	Host Viewer Finish
7	01/04/2005	16:52:27	Viewer.Frm	EndProc	Host Survey Finish
8	01/04/2005	16:52:24	Viewer.Frm	EndProc	Host Kanri Finish
9	01/04/2005	16:04:00	MainCtrl32.Bas	Main	Host Survey Start
10	01/04/2005	15:30:59	MainCtrl32.Bas	Main	Host Survey Start
11	01/04/2005	15:29:53	Viewer.Frm	EndProc	Host Survey Finish
12	01/04/2005	15:14:00	Viewer.Frm	Main	Host Kanri Start
13	01/04/2005	14:27:00	MainCtrl32.Bas	Main	Host Survey Start
14	01/04/2005	14:14:25	Viewer.Frm	EndProc	Host Kanri Finish
15	01/04/2005	14:05:01	Viewer.Frm	Main	Host Kanri Start
16	01/04/2005	13:19:01	Viewer.Frm	Main	Host Kanri Start
17	01/04/2005	13:13:54	Viewer.Frm	EndProc	Host Kanri Finish
18	01/04/2005	13:13:16	SysHelth.Frm	RingChenge	Host Chang Ring No by Force(5Ring ->4Ring)
19	01/04/2005	13:12:31	SysHelth.Frm	WorkModeChange	Host 5Finish Date Gathering Ring Data by Force
20	01/04/2005	13:12:02	SysHelth.Frm	WorkModeChange	Host 5Start Gathering Ring Data by Force
21	01/04/2005	10:19:00	Viewer.Frm	Main	Host Kanri Start
22	01/04/2005	10:15:39	Viewer.Frm	EndProc	Host Survey Finish
23	01/04/2005	09:31:59	MainCtrl32.Bas	Main	Host Survey Start
24	12/25/2004	15:02:31	MainCtrl32.Bas	Main	Host Main Start
25	12/25/2004	15:02:31	MainCtrl32.Bas	Main	Host Viewer Start
26	12/25/2004	15:02:35	Viewer.Frm	EndProc	Host Viewer Finish
27	12/25/2004	15:02:31	MainCtrl32.Bas	Main	Host Viewer Start
28	12/25/2004	15:02:36	Viewer.Frm	EndProc	Host Main Finish
29	12/25/2004	14:45:41	Viewer.Frm	EndProc	Host Viewer Finish
30	12/25/2004	14:41:00	MainCtrl32.Bas	Main	Host Viewer Start
31	12/25/2004	14:34:25	Viewer.Frm	EndProc	Host Viewer Finish

Shield tunneling method

Excavation Management System

ARiGATAYA Ver.3.0

CONTENTS

1. Data Monitor Page 2
2. System Information Page 3
3. Loop Maintenance Page 4

The ARiGATAYA Ver.3.0 System, composed of the software and various associated hardware, treats the measurement values (especially concerned with the measurement hardware) on the premise that they are true and correct. It is, therefore, necessary that the measurement hardware kept in optimum condition is always used.
We assume no responsibility for any damages resulting from the use of the System or for the damages previously informed by us as well as damages, loss, and harm caused to the User.
The copyright of this manual belongs to enzan koubou Co., Ltd. It is strictly prohibited to duplicate, distribute, and disclose the content without our prior approval. Any content of this website may neither be duplicated nor distributed without prior approval.

1. Data Monitor

Current data are displayed.

Select [Screen Select] → [System Set] . (Then close ROBOTEC screen or other.) Select [Data Monitor] to go to the screen.

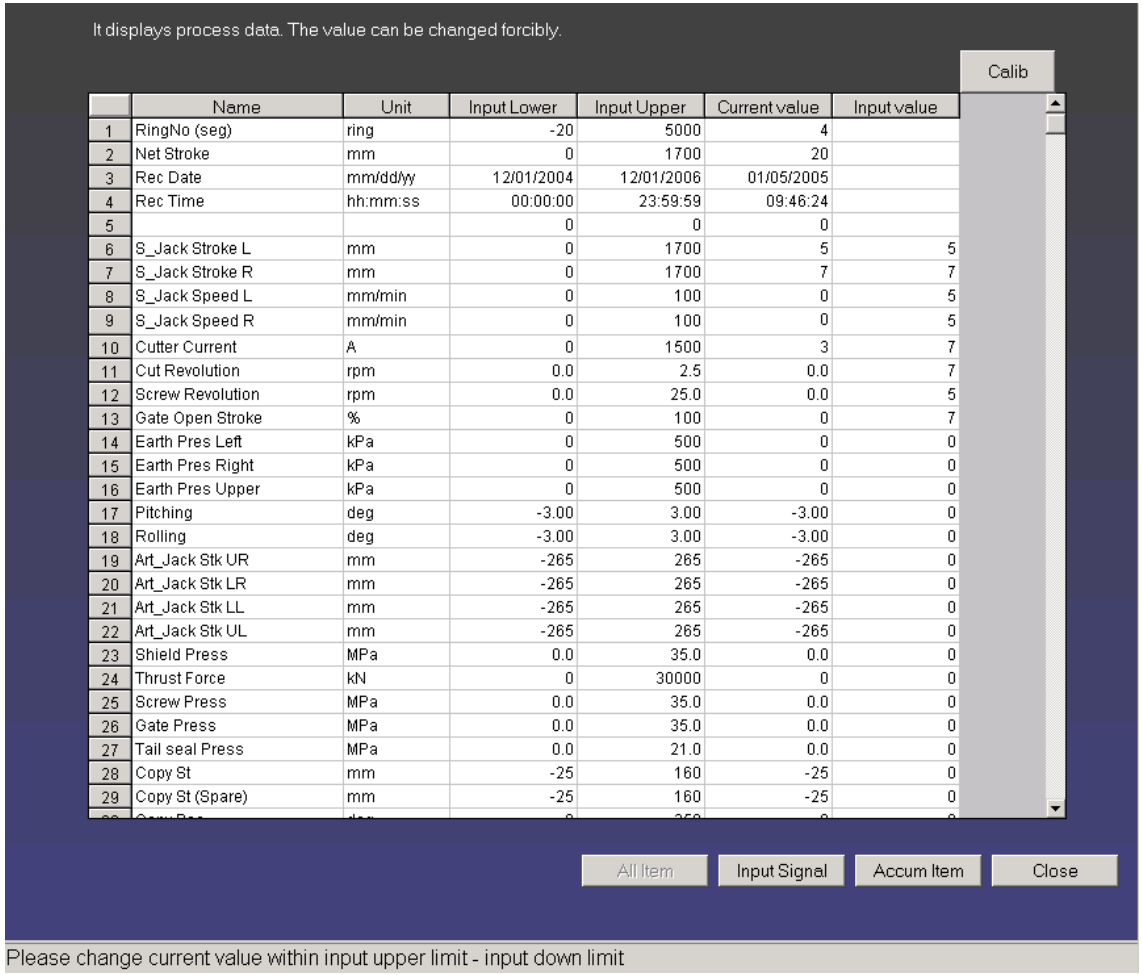

	Name	Unit	Input Lower	Input Upper	Current value	Input value
1	RingNo (seg)	ring	-20	5000	4	
2	Net Stroke	mm	0	1700	20	
3	Rec Date	mm/dd/yy	12/01/2004	12/01/2006	01/05/2005	
4	Rec Time	hh:mm:ss	00:00:00	23:59:59	09:46:24	
5			0	0	0	
6	S_Jack Stroke L	mm	0	1700	5	5
7	S_Jack Stroke R	mm	0	1700	7	7
8	S_Jack Speed L	mm/min	0	100	0	5
9	S_Jack Speed R	mm/min	0	100	0	5
10	Cutter Current	A	0	1500	3	7
11	Cut Revolution	rpm	0.0	2.5	0.0	7
12	Screw Revolution	rpm	0.0	25.0	0.0	5
13	Gate Open Stroke	%	0	100	0	7
14	Earth Pres Left	kPa	0	500	0	0
15	Earth Pres Right	kPa	0	500	0	0
16	Earth Pres Upper	kPa	0	500	0	0
17	Pitching	deg	-3.00	3.00	-3.00	0
18	Rolling	deg	-3.00	3.00	-3.00	0
19	Art_Jack Stk UR	mm	-265	265	-265	0
20	Art_Jack Stk LR	mm	-265	265	-265	0
21	Art_Jack Stk LL	mm	-265	265	-265	0
22	Art_Jack Stk UL	mm	-265	265	-265	0
23	Shield Press	MPa	0.0	35.0	0.0	0
24	Thrust Force	kN	0	30000	0	0
25	Screw Press	MPa	0.0	35.0	0.0	0
26	Gate Press	MPa	0.0	35.0	0.0	0
27	Tail seal Press	MPa	0.0	21.0	0.0	0
28	Copy St	mm	-25	160	-25	0
29	Copy St (Spare)	mm	-25	160	-25	0

All Item | Input Signal | Accum Item

"Group Select" helps search for data.

Press the Calib button, enter the password, and check "Calib" at a desired calibration item. The current value can now be changed temporarily.

To change the current value, enter a value directly into the current value box of the item.

Note that the changed data is fixed if it is not restored to the original current value.

button disables calibration of all the items.

2. System Information

Parameters for system operation are determined on this screen.

Select [Screen Select] → [Maintenance] → [System Info] to go to the screen.

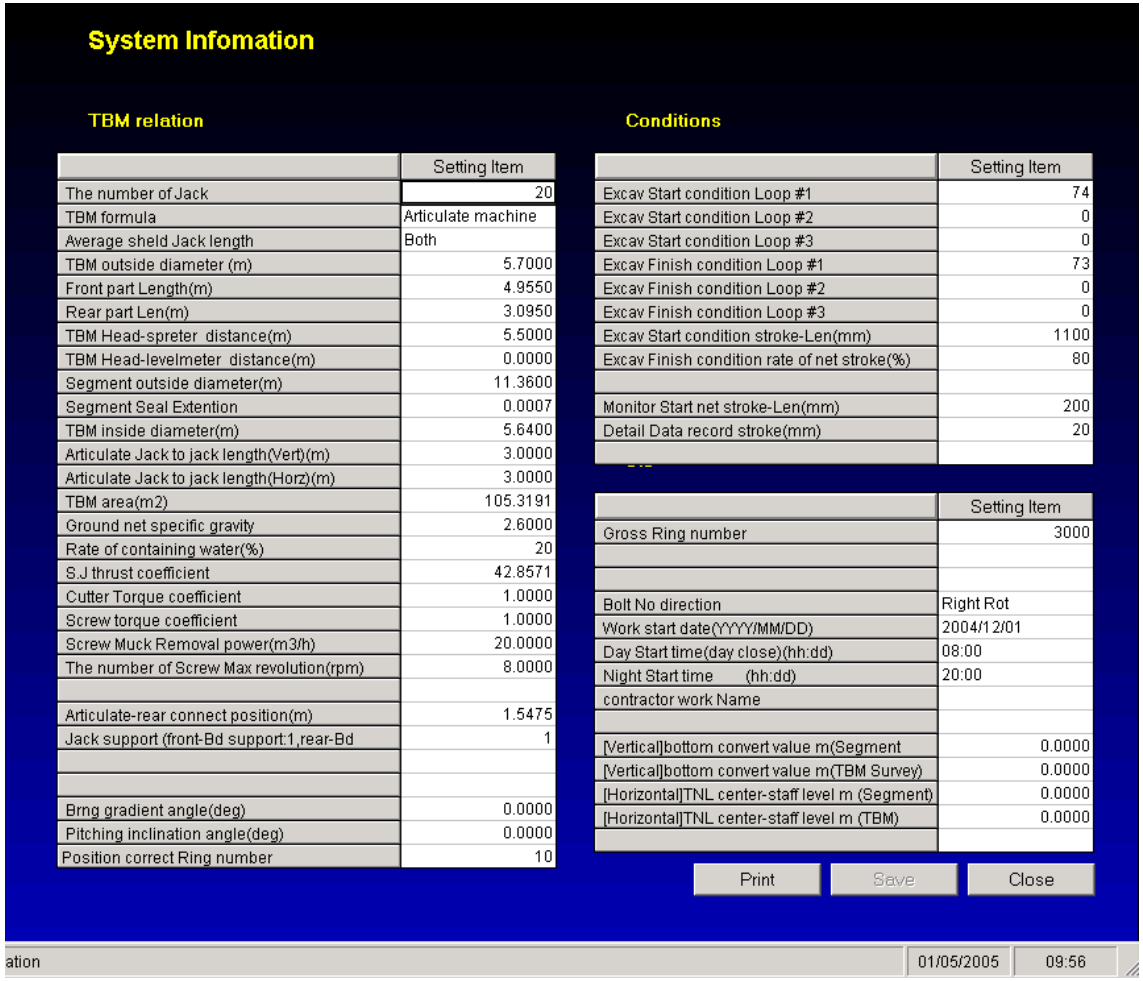

Maintenance of the input data and such can be implemented on this screen.

Since the necessary data have been predetermined, changing an input data on this screen may spoil the integrity or consistency of the setting.

If not needed, do not tamper the input data.

3. Loop Maintenance

All the data are defined on this screen.

Select [Screen Select] → [Maintenance] → [Loop Maintenance] to go to the screen.

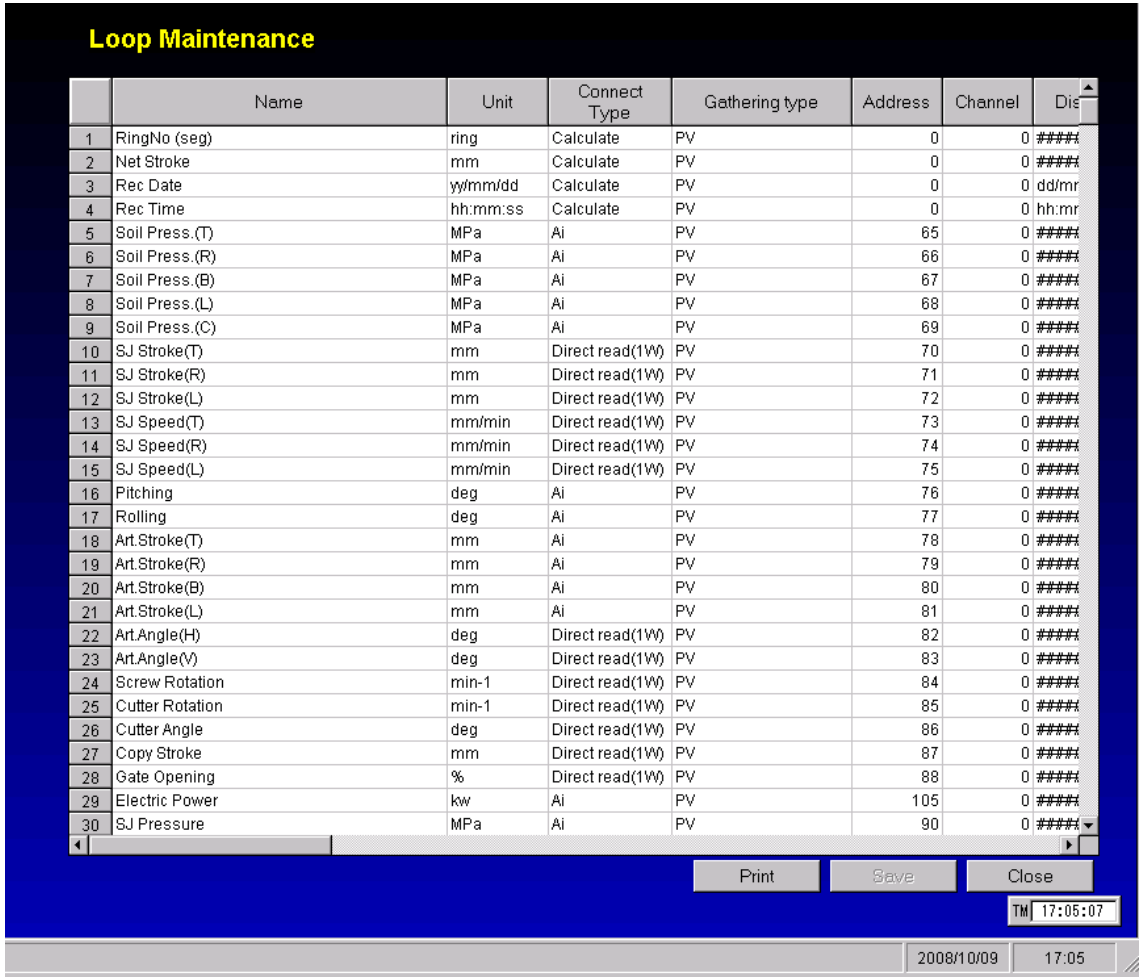

	Name	Unit	Connect Type	Gathering type	Address	Channel	Dis
1	RingNo (seg)	ring	Calculate	PV	0	0	#####
2	Net Stroke	mm	Calculate	PV	0	0	#####
3	Rec Date	yy/mm/dd	Calculate	PV	0	0	dd/mr
4	Rec Time	hh:mm:ss	Calculate	PV	0	0	hh:mr
5	Soil Press.(T)	MPa	Ai	PV	65	0	#####
6	Soil Press.(R)	MPa	Ai	PV	66	0	#####
7	Soil Press.(B)	MPa	Ai	PV	67	0	#####
8	Soil Press.(L)	MPa	Ai	PV	68	0	#####
9	Soil Press.(C)	MPa	Ai	PV	69	0	#####
10	SJ Stroke(T)	mm	Direct read(1W)	PV	70	0	#####
11	SJ Stroke(R)	mm	Direct read(1W)	PV	71	0	#####
12	SJ Stroke(L)	mm	Direct read(1W)	PV	72	0	#####
13	SJ Speed(T)	mm/min	Direct read(1W)	PV	73	0	#####
14	SJ Speed(R)	mm/min	Direct read(1W)	PV	74	0	#####
15	SJ Speed(L)	mm/min	Direct read(1W)	PV	75	0	#####
16	Pitching	deg	Ai	PV	76	0	#####
17	Rolling	deg	Ai	PV	77	0	#####
18	Art.Stroke(T)	mm	Ai	PV	78	0	#####
19	Art.Stroke(R)	mm	Ai	PV	79	0	#####
20	Art.Stroke(B)	mm	Ai	PV	80	0	#####
21	Art.Stroke(L)	mm	Ai	PV	81	0	#####
22	Art.Angle(H)	deg	Direct read(1W)	PV	82	0	#####
23	Art.Angle(V)	deg	Direct read(1W)	PV	83	0	#####
24	Screw Rotation	min-1	Direct read(1W)	PV	84	0	#####
25	Cutter Rotation	min-1	Direct read(1W)	PV	85	0	#####
26	Cutter Angle	deg	Direct read(1W)	PV	86	0	#####
27	Copy Stroke	mm	Direct read(1W)	PV	87	0	#####
28	Gate Opening	%	Direct read(1W)	PV	88	0	#####
29	Electric Power	kw	Ai	PV	105	0	#####
30	SJ Pressure	MPa	Ai	PV	90	0	#####

Maintenance of the input data and such can be implemented on this screen.

Since the necessary data have been predetermined, changing an input data on this screen may spoil the integrity or consistency of the setting.

If not needed, do not tamper the input data.

ROBOTEC SURVEY SYSTEM

ROBOTEC Ver.1.5

Instructions Manual

rev.2.0.8d

This document is protected by the Copyright Law and requires enzan's prior permission for the following actions:

(1) Copying or other means of reproduction
(2) Transmission to the public (third parties)
(3) Creating and utilizing derivatives

CONTENTS

PURPOSE····· 1

FEATURES····· 1

EQUIPMENT CONFIGURATION····· 2

BASIC FUNCTION····· 3

SCREEN SPCIFICATION
ROBOTEC SURVEY SCREEN····· 4
Explanation for top window frame····· 4
Acquisition of operational right····· 5
Explanation for data relating to survey····· 5
Animation display····· 5
Position display····· 5
Deviation graphics····· 6
Running history····· 7
Robotec survey····· 7
Messages in animation····· 8
Manual operation screen····· 9
New point install method(Shift method)····· 11
Setting screen····· 14
Prism position setting····· 18
Robotec survey point setting····· 19
Robotec survey file maintenance····· 21

Error Message List····· 22

If Effects of Electromagnetic Wave Are Considered····· 23

Total Station Manual Operation····· 24

Printing Sample····· 25

Trouble Shootings····· 28

The ROBOTEC Ver.1.5 System, composed of the software and various associated hardware, treats the measurement values (especially concerned with the measurement hardware) on the premise that they are true and correct. It is, therefore, necessary that the measurement hardware kept in optimum condition is always used.

We assume no responsibility for any damages resulting from the use of the System or for the damages previously informed by us as well as damages, losses and harm caused to the User.
The copyright of this manual belongs to enzan koubou Co., Ltd. It is strictly prohibited to duplicate, distribute and disclose the content without our prior approval. Any content of this website may neither be duplicated nor distributed without prior approval.

Before using the Total Station, read the user's manual thoroughly for a proper understanding of what the Total Station does and how to use it.

Prohibitions:

- Using the product without a full understanding of the instructions
- Using the product for purposes beyond its intended usage limits
- Disassembling the product
- Modifying or altering the product
- Direct collimation with the sun
- Irradiating anyone with the beam

Failure to observe the above prohibitions may result in physical injury, breakdown, or damage.

When transporting the Total Station, use the dedicated packaging materials (casing and carton) wherever possible. When carrying the Total station on site, use the original casing.

The Total Station is drip-proof. However, pouring water on it may cause failure. If the Total Station gets wet, wipe water off immediately.

Do not touch the glass of the lens or prism.
If glass becomes stained, wipe gently with a soft cloth.

This measuring device is a precision instrument. Causing shock to the body may cause failure.

It is dangerous to look directly at the beam from the Total Station.

A computer is a precision instrument. Do not touch with wet hands. Doing so may cause failure.

Do not touch electric components with wet hands. Doing so may result in electric shock.

Do not touch electric components with wet hands. Doing so may cause failure.

When connecting or disconnecting a cable that has a connector, be sure to hold the connector securely. Holding the joint between the connector and the cable may damage the cable.

When connecting a cable that has a terminal, be sure to fasten the terminal securely using an appropriate tool. Loose connections may cause failure.

Do not allow the inside of the interface board to get wet. Doing so may cause a fault.

Keep the door of the interface board securely shut whenever possible. Failure to do so may cause a fault.

The cable is live. Cutting the cable without taking due care may result in an electric shock.

Do not strip or damage the cable.

If the earth leakage breaker has tripped, electric leakage is likely. Locate the leakage, confirm safety, and close the breaker.

Before wiring, make sure that the power circuit breaker is open.

Purpose

This system aims at improving survey efficiency, enhancing quality, and promoting progress in shielding works.

Labor Saving

Daily surveying is often conducted during both day and night shifts, requiring a lot of time. This system makes possible the reduction of the personnel and time needed for the survey.

Features

・Surveying instrumentation of high accuracy is used.(Accuracy:3 seconds)

・User interface with an excellent operability.

・Survey is performed in the manner that is equivalent to manual survey collimating two target points and the position is calculated at a high accuracy in a short time. (approximately 40 seconds)

・When a target has been lost, it searches another target by itself to enable the survey as possible.

・It can be used under the most suitable conditions to the station by means of setting various setting items.

・Survey can be instructed and monitored by real time from an in-pit operation room, a central monitor room, or an office.

・The meandering status can be displayed in position screen.

・It displays the past survey results in graphics where you can catch the changing conditions at a glance.

EQUIPMENT CONFIGURATION

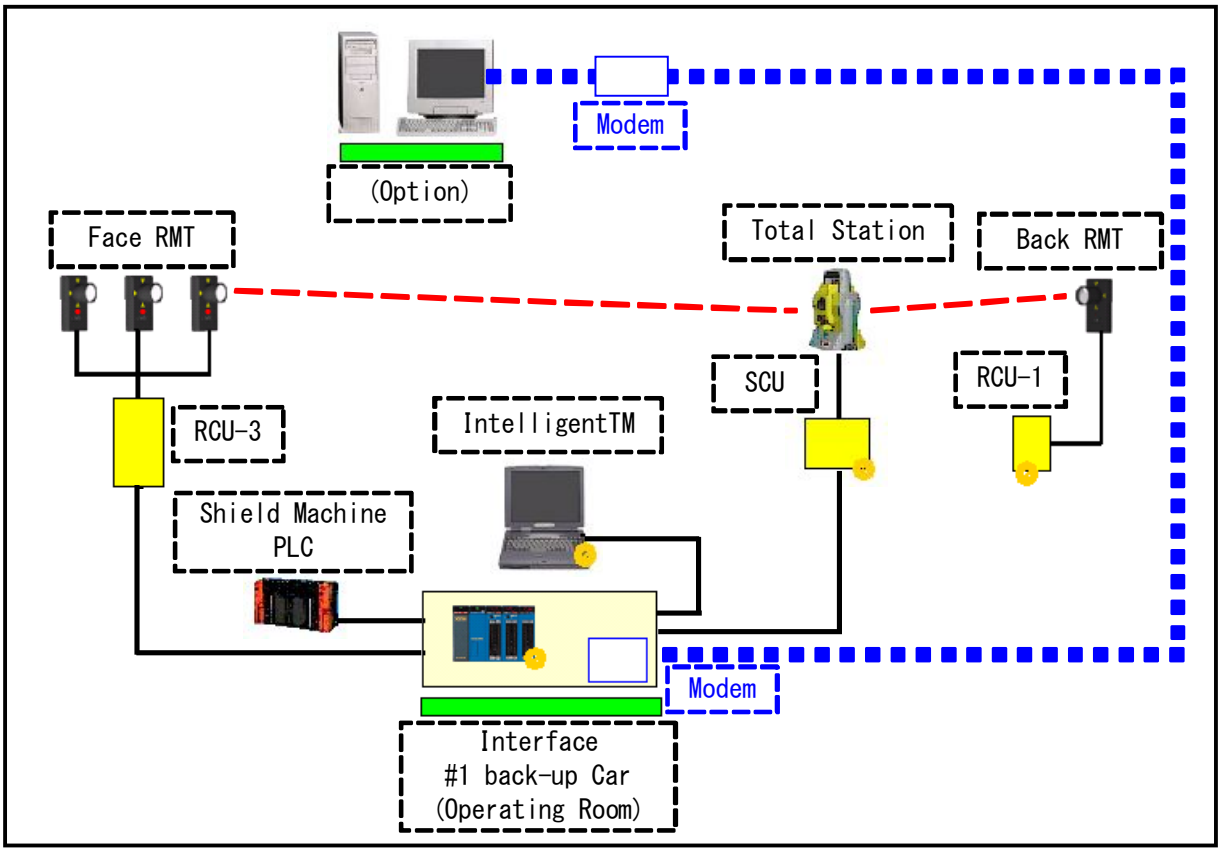

Automatic Survey Host	This is the control host for this system installed on the ground. It manages various settings, monitors automatic survey, and implements remote survey.
Interface	This device runs various components and controls measurement.
Target(RMT)	This is called the RMT target, which consists of a special emitter and a prism. It is installed on three positions in the shield machine (with shutters) and on one position at the known point (back sight) on the back.
Total Station	Total Station with Automatic Tracking + Auto-lock Type + Automatic Search.
Intelligent TM	This is an automatic survey terminal, so-called intelligent terminal, on the operating seat. It is used for the automatic survey operation, shifting operation, monitoring, etc.

Basic Function

1.Function

・Communication cycle	update for every 3 seconds
・Data retention interval	a. for every 20mm b. for every 100mm (ML) c. for every ring d. time series data sampling (save data for every 5 seconds)
・Remote operation (option)	Working instruction, setting and so forth can be attained from remote position (center, office)
・Precise Robotec survey	a method to survey 2 points to improve the accuracy by means of precise distance measurement and several time angle measurement. (at the time of machine stop)
・High speed Robotec Survey	a method to survey 2 points by means of high speed distance measurement and angle measurement. (at the time of machine excavation)
・Animation function	to animate prism and equipment
・Position display	a position display of faithful reduction for actual dimension (possible to expand)
・Running history	Message display in real time survey of working status.
・Various setting function	Setting and so on in order to make a function so as to be suitable to the site.
・Manual operation function	to perform shifting at known point and working test.

2.Accuracy

・Theodolite (Total Station)	Angle measurement : 3 sec. Trimble(5603) Elevation angle : 3 sec. Trimble(5603) Range finding : < ±(2mm + 2ppm) Read : 1mm Compensator : 6 minutes
・Prism (RMT)	About 300m

3.Miscellaneous

Auto-lock function

ROBOTEC SURVEY

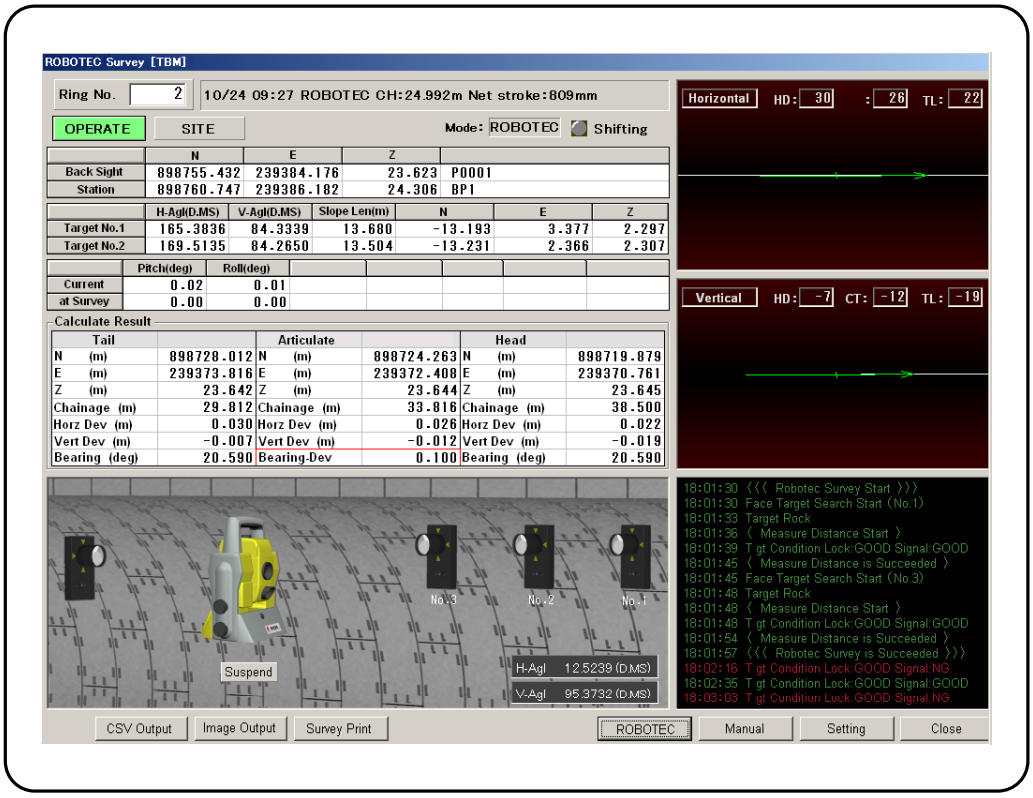

Function

This is a principle screen for the robotec survey, from which survey instruction or various settings are available.

Screen top

Ring No.

It displays the present ring No. when the screen is displayed.

If you wish to watch the past survey results for the stroke, the stroke list is displayed when the ring No. is input directly or the frame inside for

is clicked (one time, mouth left button).

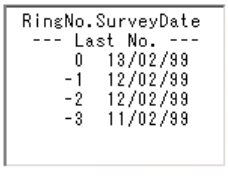

Selecting arbitrary ring number the list, the appropriate data is shown.

Please change back to the latest data by selecting "----Last No.----" after conform the past data.

(Otherwise Robotec survey data don't update)

Data and time for survey execution

It displays date and time of survey execution, surveying method, Chainage, NetStroke (Stroke extension length at making starting point to be 0)

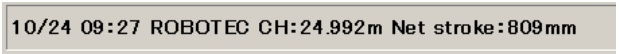

Operating Right

It displays the area covered by the operating right now going concerns with green. The area with edged circumference indicates the pace for computer.
If survey instruction or setting is implemented, it is necessary to acquire the operation right in advance.

Acquisition method

- When the message is displayed, press OK.
  The operational right is transferred after a while.
- Since the engine room is likely to be used most frequently, it is recommendable to transfer the operation right to engine room after the right has been acquired in those areas except for engine room.
  When excavation mode is changed over to "Erection, it is returned to engine room automatically by setting.

Data relating to survey

- Known point
  It displays back sight, station coordinates and registered name.
- Target data
  It displays the coordinates calculated with survey basic data. For distance, it is a value after compensation in the case of compensation setting.
- Machine data
  The current and measured values are displayed. If a value is entered forcibly for Pitching, Rolling, Articulation (Horiz.), or Articulation (Vert.) by calibration, the background turns red.
  (See Page 2 in Chapter 9 of the AriGATAYA Manual)

	Pitch(deg)	Roll(deg)	Artic Vert	Artic Horz
Current	0.00	0.00	12.00	12.00
at Survey	-1.34	0.00	-0.18	-0.19

- Calculation results
  It is the results of calculation for machine head, center and tail.
  Bearing deviation : the difference between survey bearing and aiming

Animation Display

It displays in animation, which target is now aiming at.

Position Display

The plan alignment and machine position are overlapped and displayed. (The machine position is emphasized through enlargement.)

If each title of TL, CT, and HD is clicked,

is displayed. Enter the enlargement value. If the title is clicked, the setting frame display close.

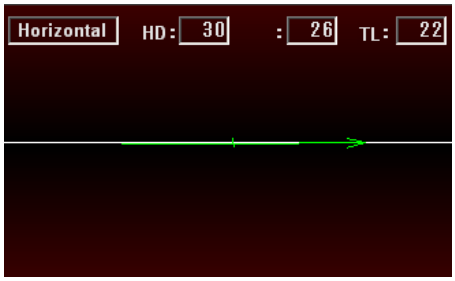

(30 time expansion)

White color : Designed Alignment
Green color : Machine Center

Double click position display frame inside displays deviation graphic.
(see next page.)

Deviation graph

It position display frame inside is double-clicked, deviation graph is displayed, where respective graphs for machine head and tail or the posture connecting head and tail with straight line are graphically displayed. The horizontal axis indicates Chainage that is graphically displayed for every 0.1m data.

・Graphic display for head and tail

When head and tail are checked, it displays polygonal line graph.

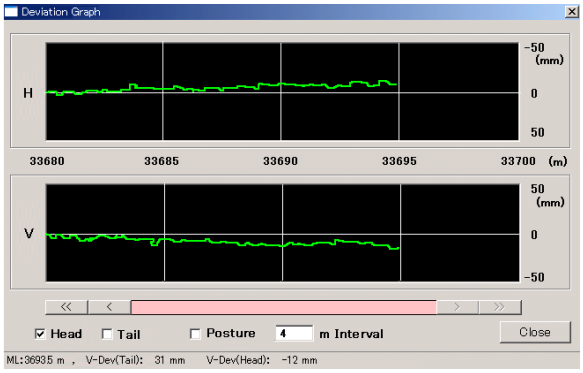

・Posture graph display

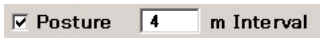

every is checked, it displays the posture at top and back end. At the moment, it is possible set a graph display for every how many meter.

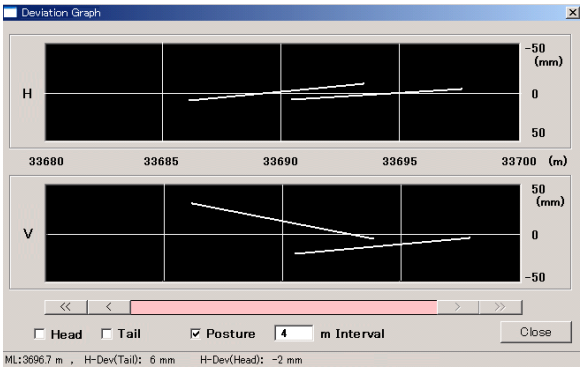

・Graph range changing method

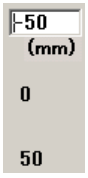

(1) Move mouse to graph upper limit or lower limit to double click, then, input frame is displayed.

(2) Change by direct manual input to push Enter key. Otherwise, Move mouse to graph internal to click it at a given point. (depending upon the mouse position, the value within input frame may be changed).

・Graph scroll

If you wish to display the past graphs, they can be displayed by pushing scroll button.

:For every 10m :For every 2m

・Data value display on graphs

It mouse is moved on horizontal axis, the data of Chainage(head), tail and head at that position are displayed.

ML:36935 m , V-Dev(Tail): 31 mm V-Dev(Head): -12 mm

Running History

When a survey instruction is issued the actually running condition is displayed in real time. It is possible firmly to grasp the action for the instruction by the existence of running history.
Although it is satisfactory if XXXX start ～ XXXX normally end, it is necessary to investigate and confirm the causes in cases where it is completed in error (the failure cause may be easily yielded due to no target found). The normal working is displayed in green color, which turns to red color at the time of error.

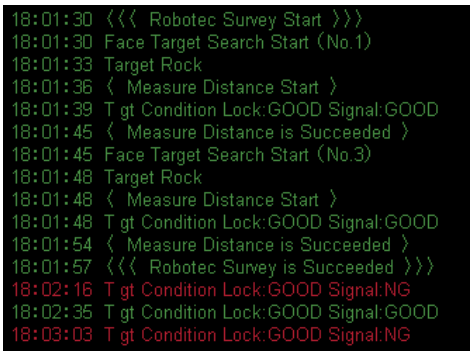

double click ⇒

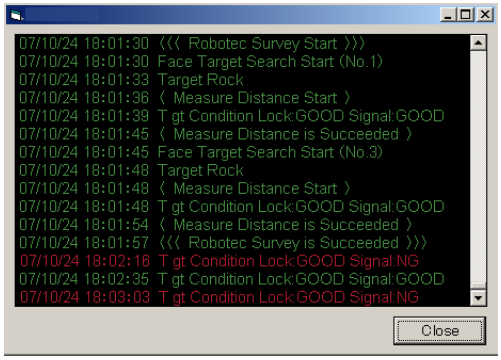

Survey result printing out

Survey Print Clicking SURVEY PRINT enables printing of data survey concerned.

Robotec survey

ROBOTEC If ROBOTEC SURVEY is clicked, it starts up robotec survey. Robotec survey means a method to survey 2 points in the same method as that oj manual survey. For the reason, it enables to ask for more precise data both for distance and bearing.
In the manual survey, back-sight can be found all the time, while, in the case of robotec survey, it is not necessary to find back-sight since 0-reset has been applied. The survey can be terminated earlier for that portion. (40 seconds or so). However, it is recommend able to survey in a method to find back-sight once per day or back sight search within a single operation screen since the known point may be fluctuated. (check back sight point collimation in setting screen)
If one of the face targets becomes unsearchable, another target is automatically searched. If two targets or the essential target cannot be searched, abnormal end occurs. If tracking has been set up and Robotec survey abnormally ends three times consecutively, the tracking mode automatically starts.
In cases where Robotec survey with Excavation is effective, try Robotec survey at excavation start, re-start and stop.

CSV Output

CSV Output Click the CSV Output button to start CSV conversion.
Convert record data into the CSV format for reading by Excel.
The output destination is D:¥ARiGATAYA¥TextRepo. ¥RoboSurv. csv.

Image Output Click the image Output button to start jpeg (picture) creation.
A jpeg (picture) is output in the same way as forms.
The output destination is D:¥ARiGATAYA¥RoboPrint¥.

Messages in animation

・Compensator trouble

The total station could not be held horizontal.
Turn the compensator off and on independently for confirmation.
(This solves a problem of momentary hitting or other.)

・Compensator off

The system is in operation with the compensator off.

・Large back point difference

The distance by back point search differs greatly from that between the input Coordinates.
The coordinates need to be checked.

・Meandering, mechanical point coordinate, and back point coordinate check.
Abnormally great meandering was calculated by Robotec survey.
The coordinates need to be checked.

MANUAL OPERATION

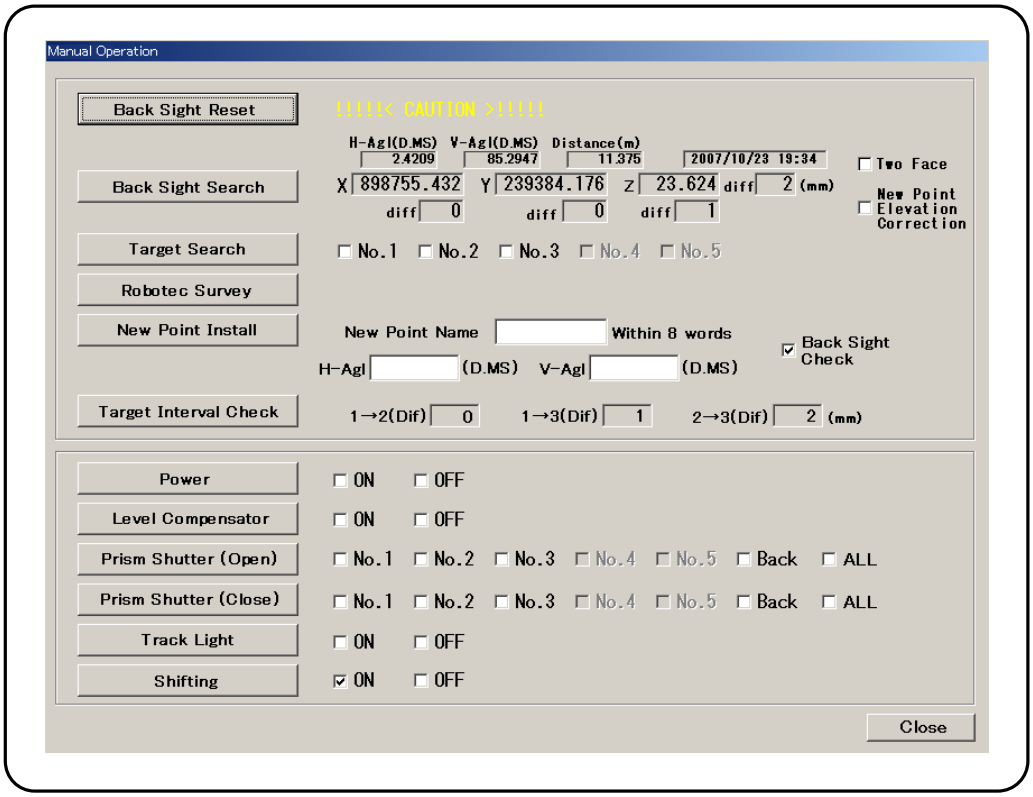

Function

Clicking Manual calls for it. In this screen, it is aimed to undertake an independent motion. The details are as follows.

・Back sight reset Back Sight Reset !!!!< CAUTION >!!!!!

If known point is shifted, apply 0-reset for back sight.

・Back sight search 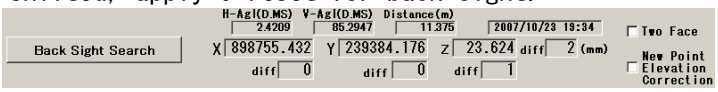

Collimate back sight alone to check if known point moves, it displays message when any error conditions are found. There is possibility that some error had been caused by electromagnetic influence etc.

In the case of diff 7 (mm) difference too much, please do back sight reset, Back Sight Reset back sight search again. Back Sight Search If difference is still too much, there's possibility that transit point or back sight has been moved. Please check transit point and back sight point by another method.

The allowable range for the check can be established at your discretion. Check back sight point once per day or so if possible.

・Target search Target Search No.1 No.2 No.3 No.4 No.5

If the desired target for collimation is designated, it searches. It is used to check if the target can be collimated normally.

・Robotec survey Robotec Survey

Equivalent functions as same as those for robotec survey button in basic screen.

Out Line of New point installation and transit point shifting

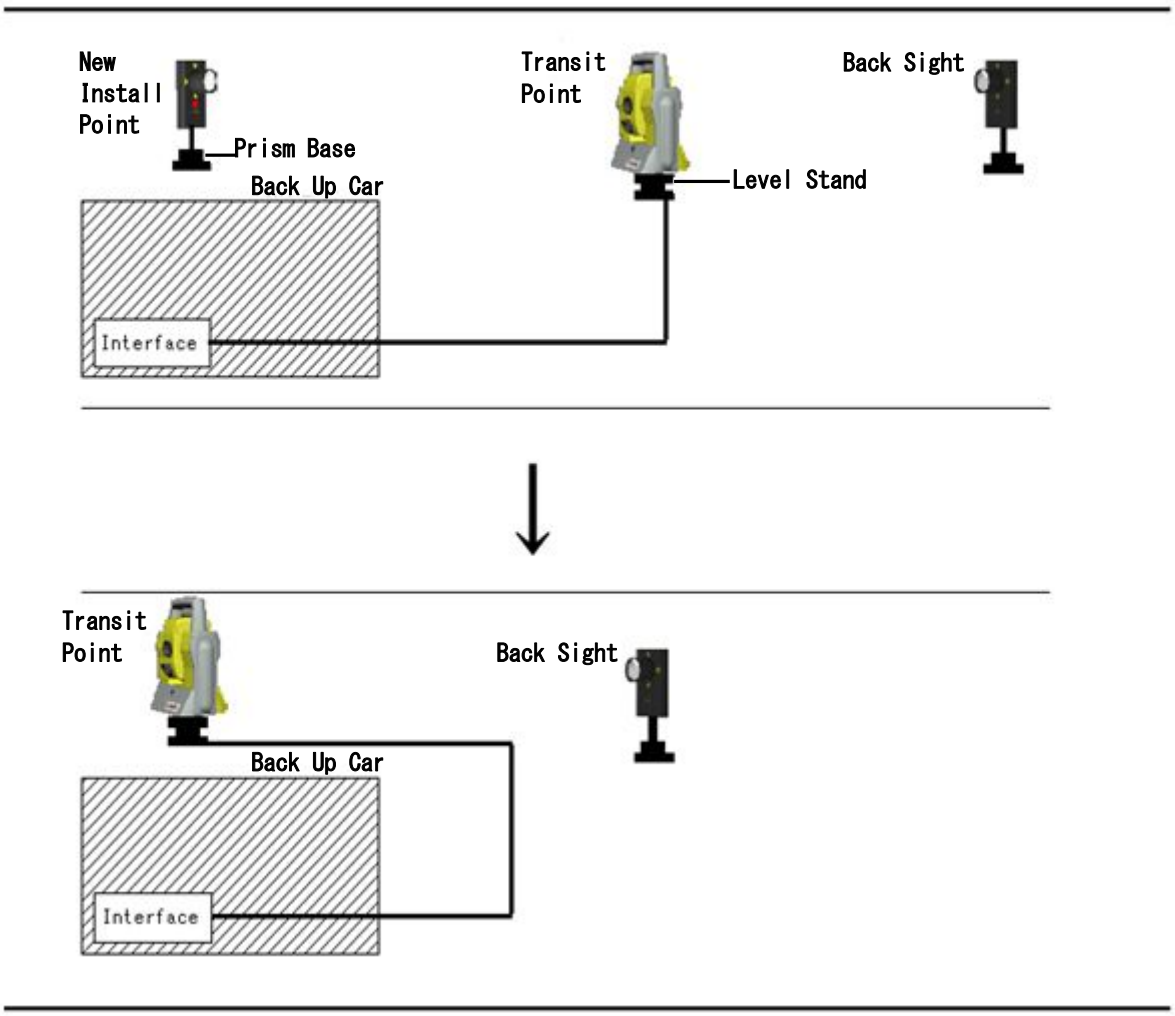

When transit point shift to new install point, remove prism base and install total station, it is possible to get same coordinate because of level stand.

・New point install and transit point shifting

It is practiced at the time of known point shifting.

The shifting procedure is as follows.

(1) Set a bracket for new install point. (Adequately examine the place for installing.)

(2) Check to see if the operation authority is on the operating room. If not, transfer the operation authority to the operating room.

(3) Print out robotec survey results before shifting. (Alternatively, record the deviation and machine coordinates.)

(4) Turn On

in this screen check box.

in basic screen lightens up in yellow color and the operation for robotec survey and so forth are not available for the purpose of safety.

(5) Install the leveling stand on the newly provided base frame and adjust leveling. (Make final adjustment with a horizontal bar type air-bubble tube.)

(6) Set the reserved target (RMT) on the newly installed leveling stand. (Set a new dry cell. With an old and voltage-dropped dry call, LED blinks but locking cannot be achieved successfully. As a result, survey becomes unstable. After the dry cell is used for about two hours, replace it with a new one.)

(7) Orient the target to the theodolite to push switch and allow flickering LED.

(8) Turn the machine toward the target (Do it upon installation of the machine. Otherwise, turn the machine toward the target by designating an angle.)

(9) Input new install point name (within 8 digits or less) from underground inside-of-a-pit PC. When the theodolite (8) is not oriented to the target direction, manually input approximate horizontal angle and vertical angle. If it has been looked. The horizontal angle and vertical angle are displayed automatically when New Point install button has been clicked.

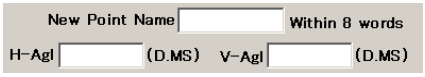

(10) Back sight check

Check back sight and apply 0-reset for back sight.

As a rule, Please select on back sight check box. (Exclude error factor as noise etc.)

(11) If New Point install button is clicked, confirmation message box is displayed. If

is clicked, it surveys to register a new install point.

In the case of back sight point gap is too much, please survey transit point and back sight point again.

(12) Click

within Robotec setting screen to call for survey point setting screen.

(13) Click the new install point name of all registered survey point list in (9) and register the station with

button. For a while, coordinates and name in basic screen is renewed. The back sight point is registered in the same way as well.

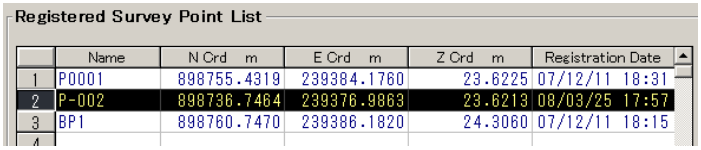

(14) Dismount target set on new install point (the level stand is kept as it is) to set theodolite at the same position. Adjust the leveling with babble tube.

(15) Set the target used for the past back sight point at the point where the theodolite has been fitted.

(16) Transfer cable and or the likes.

(17) Turn on theodolite power supply from inside- of-a-pit PC.

(18) Reset back sight point.

(19) Transit point level compensation

Tick

checkbox and click

After the normal completion, confirm "Z Crd m" value of the registered station in the "Registered Survey Point List" on the "Survey Point Setting" screen.

Only registered "Z Crd m" value is compensated.

Click

and update the value.

Note: This compensation must be done ONCE right after the shifting.

・Before the compensation

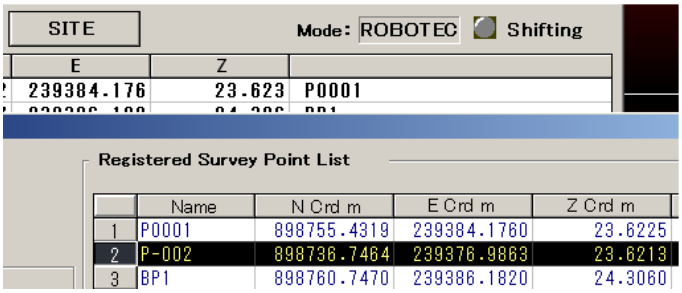

・Right after the back sight point search ticking

checkbox.

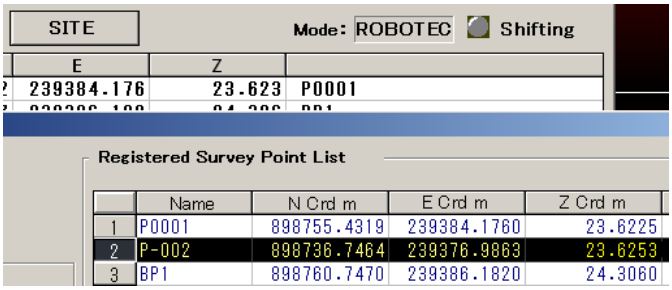

(20) Turn OFF shifting mode.

(21) Make a Robotec Survey and compare the current result with the result at the step(3). If there is no problem on these, this procedure is completed.

Note: If you want to release the Total Station locked to a target, turn manually or cover the lens by hand. Then the lock will be released.

(1) If shifting is consecutively performed in automatic survey, errors may be accumulated. Ideally, the new point should be checked through manual survey each time. However, implement check through manual survey at least once out of two or three times.

(2) Special care must be taken to machine handling upon shifting. Please avoid drop and contact.

・Target Interval Check

Survey every target installed in machine, and calculate each interval between target. Compare calculated distance with registrated target coordinate in prism position setting screen, Prism Setting then check difference.

・Power Supply

Turn On and OFF theodolite power supply switch. If X mark appears in animation display of basic screen, communication has been failed or power supply has been turned OFF. In such circumstances, issue power supply ON command from computer. If power supply is not turned On by this, turn OFF and ON power supply at the side of theodolite at site. Then, issue power supply On command over again from computer.

・Level compensator

Apply leveling with unit double axes compensation mechanism. The compensation is not available unless the degree leveled manually in advance has been adjusted within 6 minutes. In addition, in cases where it is deflected for more than 6 minutes due to some reason, the message to the effect is displayed in running history. The compensator works by itself during power supply ON. (To set the level compensator to OFF, the action of the compensator should be completed.)
If the level compensator is set to OFF, the compensator is always invalid. If a strong electromagnetic wave source is provided near the machine, the compensator is affected to the maximum. In such a case, perform manual leveling at a high accuracy and disable the compensator.

・Prism Shutter (open)

Forcibly open shutter fitted to prism. It is used in an attempt to confirm if the shutter works in proper manner at the time of new install point setting or so.

・Prism Shutter (close)

Forcibly close shutter fitted to prism.

・Truck Light

Forcibly turn ON/OFF truck light. It notices that the system is under surveying by flickering truck light during unit ranging. Since it is well noticeable in underground, it may draw attention for workers.

・Shifting

In the case of new install point setting, first of all, turn ON Transfer.
Then, Shifting in basic screen lights up in yellow color to draw attention so as not operate except from underground inside- of-a-pit PC.

※During shifting, the operation authority cannot be transferred from the office, etc. If a trouble of the back PC or the like occurs, however, operation is disabled completely. In such a case, clicking the yellow lamp of Shifting allows transfer of the operation authority (Shifting turns into blue).

SETTING

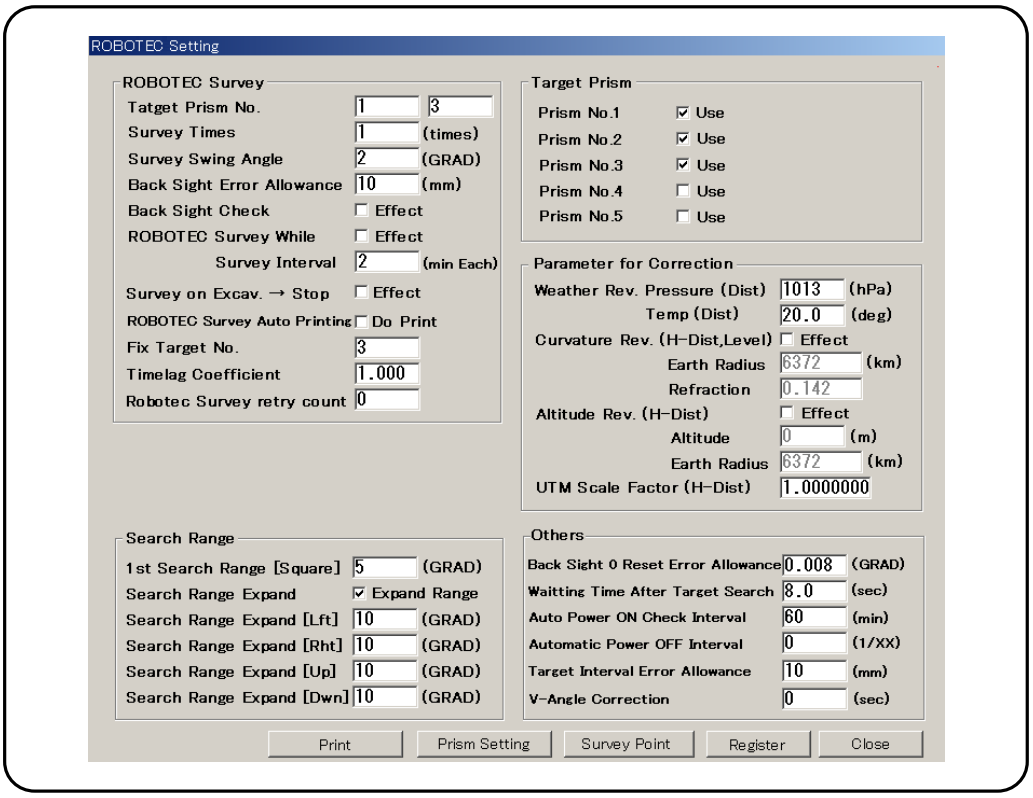

Function

It is called by clicking Setting. In this screen, various settings can be attained to enable motion so as to be suitable to the situation.

Robotec survey

・Target prism No. Tatget Prism No. 1 3

Set target No. to search 2 points.

・Angle survey times Survey Times 1 (times)

In most cases, one time is enough, however, when it is set several times(max 5), repeat angle and range measurement designated times to ask for standard deviation value and adopt the data by means of calculating mean value only for effective data. Accordingly, the accuracy is improved compared with the case of one time measurement. Whereas, it takes more time for the measurement. (5 times: 2 minutes or so).
In the case of robotic survey under excavation, it attempts to complete the surveying within a shorter time as possible by making set times : 1.

・Survey Swing Angle Survey Swing Angle 2 (GRAD)

If several times is designated in angle measurement, the unit releases its lock to allow its neck swing on purpose for every time. Set the neck swing (angle).
(2 GRADE or so is enough)

・Back sight error allowance Back Sight Error Allowance 10 (mm)

Calculate distance between registrated back sight coordinate(X,Y,Z) and survey back sight coordinate when check back sight research as error. Set error allowance of calculated distance between them.

・Back Sight Check

Whether the back sight is collimated during Robotec survey is set.
In Robotec survey during excavation, the back site is not checked.

・Robotec Survey while excavation

Set if robotec survey is performed during excavation. If "Effect" is / set, it repeats robotic survey at the time interval specified as follows : 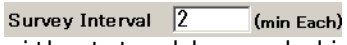

Usually, 2～5 minutes can be adopted without trouble, we believe. If 0 minute is set, it continues the work without latency time.

・Survey when mode change 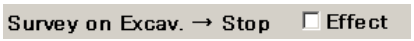

Set if robotec survey is performed when Excavation mode change to Erection or waiting.

・Robotec Survey result printing

In cases where survey instruction is issued

in basic screen during excavation stop, it sets if the calculation results are to be automatically printed out. The robotic survey during excavation shall be excluded.

・Fix target number

This is set if a target must be surveyed. If the specified target is invisible, abnormal end occurs even though other target are visible.

・Survey while Excav delay correction coefficient

This factor is used for correction to multiply the distance of machine advance (stroke difference) between the times required to survey two targets. Normally, "1.000" is set. It correction is not to be made, "0.000" is set.

・Robotec Survey retry count

Set how many times a target should be searched if one target search succeeds but the other target search fails.

Search range

・1st search range(quadrangle)

It searches within a range of quadrangle from the point asked for in prism position calculation being equivalent to the set range. Depending upon the distance between theodolite and target, no problem is expected if it is 2 GARD or so.

・Search range expand 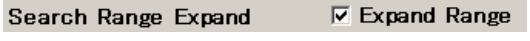

When search cannot be attained in the 1st search range, it sets if it searches by means of expanding the search range. If the distance between theodolite and target is short, it is recommendable to keep as it has been effective or to expand the 1st range.

Search range expand "left" to "down" 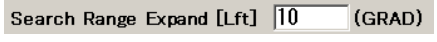

When search range expand is effective, it searches the range set here further on. If search is not available even by this, it searches next target by itself.

Target prism

・Prism No.1 ～ Prism No.5

In the system, those prisms up to 5 pieces max, are settable. Of all them, set how many pieces shall be used case by case. Suppose that those of No.1 ～ No.5 are to be used and No.1 is not available on the way, it is recommendable to adopt setting where No.1 is not used. Afterward, it is not undertaken to search No.1. (to enable time reduction).

Parameter (for Compensation)

・Compensation of atmospheric pressure and temperature (Weather compensation)

Since light waves are affected by atmospheric pressure and temperature, compensate the diagonal distance. (no compensation at 20.0℃ and 1013 hPa)

・Curvature compensation (Horizontal distance compensation)

The earth curvature affects onto the calculation for horizontal distance and level.

Check Effect activates the compensation.

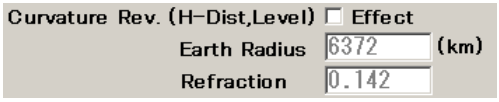

・Altitude compensation (Horizontal distance compensation)

Check Effect activates the compensation.

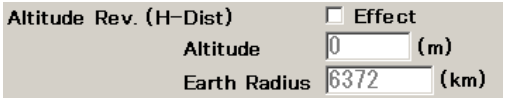

・UTM scale compensation (Horizontal distance compensation)

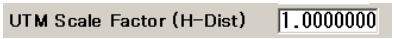

It compensates the coordinate system spherical surface.
(No compensation at 1.0000000)
(No corrections are made on the total station side. The software makes all corrections.)

Others

・Back Sight 0-reset Error Allowance

In cases where back sight point cannot be reset normally at the time of its 0-reset because it is moving or the transit point is being moved, try it over again waiting for a while.

・Waiting timer after target search

Set waiting time after completed target search, it is need a few second to stabilize theodolite perfectly after target search.

・Auto Power On Check Interval

Check theodolite power supply and communication status at setting interval. If power supply and communication status is not normal, automatically send theodolite power on signal and return to normal status. If 0 minute is set, no check is performed.

・Automatic Power OFF Interval

If noise or any other factor makes TS unstable, TS power-off may solve the problem. At every specified number of Robotec surveys, the TS power is automatically turned off. If 101 or a greater number is set, once "Set value - 100" is reached the power turns off and the back sight point is reset to 0.

・Target Interval Error Allowance

Set error allowance when check distance between targets in machine if target position is moved or not.

・V-angle correction value

The value used to correct the "tendency" of the V-angle deviation for each total station is set in seconds. With ＋, the upward tendency is corrected to downward. With －, the downward tendency is corrected to upward.

PRISM POSITION SETTING

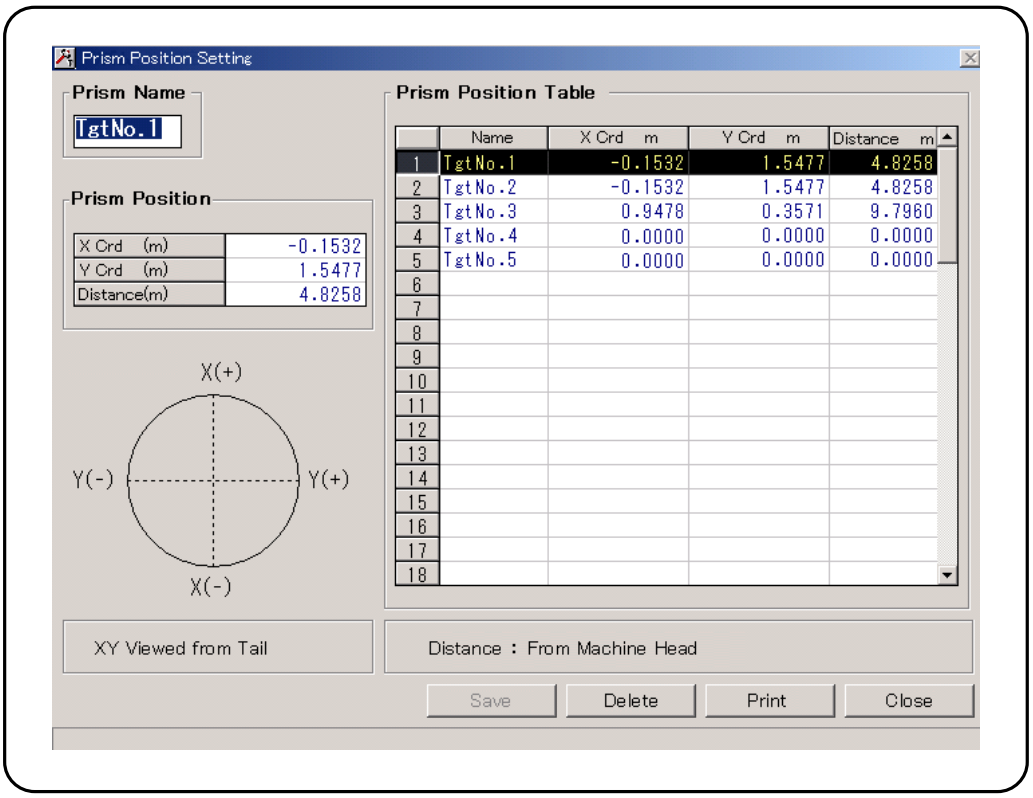

Function

If [Prism Setting] button is clicked in the Robotec setting screen, prism position setting screen is called.

In this screen, the position at which prism has been installed in the machine is set.

Note) The prism name of TgtNo.1 ～ TgtNo.5 shall be of fixed one, which shall not be changed.

Position changing method

(1) Select a prism to be changed of all prism position list. Reversibly display it in black color. Prism Position List, name, X,Y, distance.

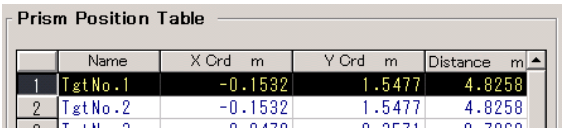

(2) Change X, Y and distance of prism position.

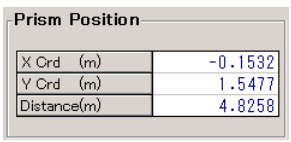

(3) If [Save] button is clicked, [Save] is activated to complete the save.

For prism settings, refer to 006 Survey Function Setting the Target Relative position in the Shield Control System ARiGATAYA Manual.

SURVEY POINT SETTING

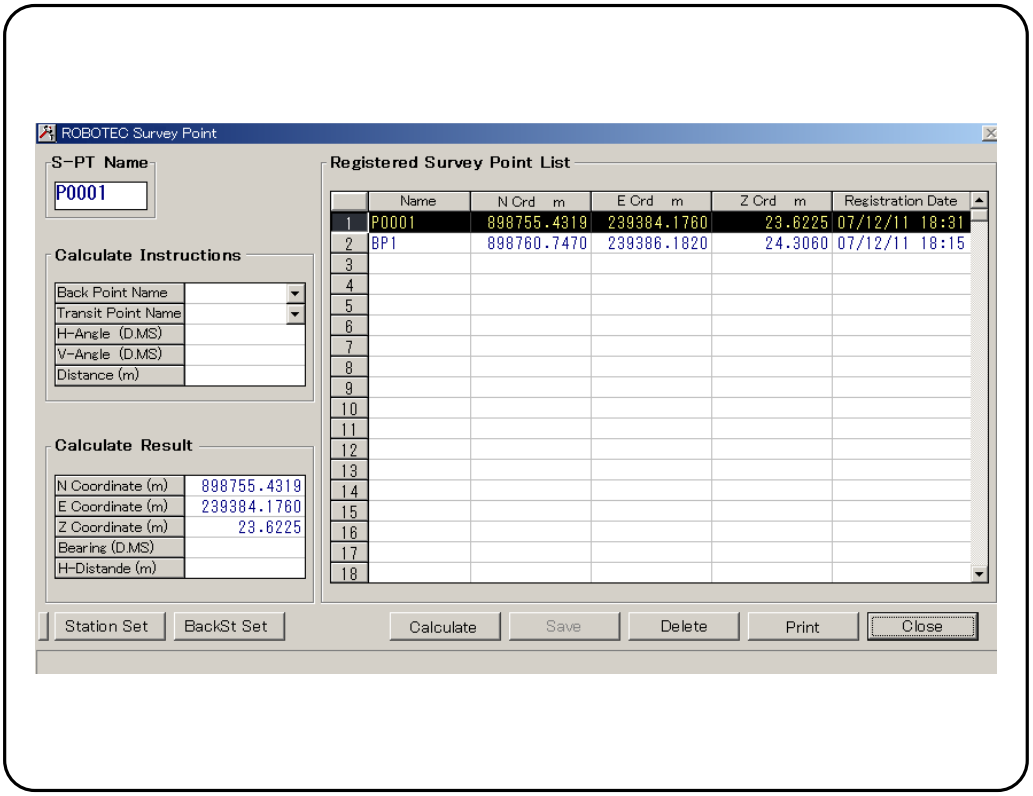

Function

If Survey Point in the set screen is clicked, survey point setting screen is called. In this screen, registration/change for known point and back sight point & station point at the time of shifting are performed. The point set in new point install of manual operation screen is automatically registered to this screen.

New survey point making up method

(1) Manually input survey point name in en 8 digits.

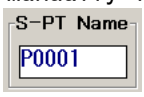

(2) Manually input the items within calculation instruction.

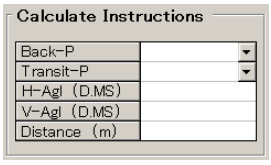

※Slanting length
Enter a value without considering a reduction coefficient.

(3) If Calculate button is clicked, it calculates and display the calculation results.

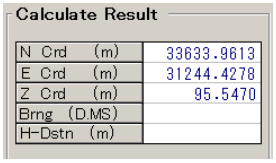

※Horizontal distance
A reduction coefficient is considered in the calculation.

(4) If [Save] button is clicked, [Save] is activated to complete the retention. The survey points saved are displayed in registered survey point list.

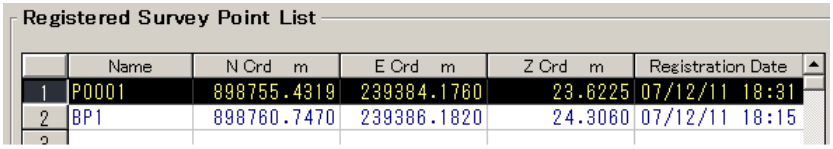

At the time of changing,

(1) Click the line of survey point to be changed in Registered Survey Point List. It reversibly displays in black color.

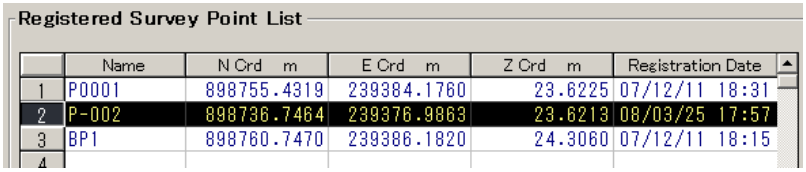

(2) Directly change calculation results inside by inputting manually.

(3) Clicked SAVE button to save the changed data.

Registration for back sight point and station point

Since registration of new station and back sight point is required at the time of shifting, register them by all means. All contents registered here are feed back to all computer.

(1) Of all registered survey point list, click a survey point to be registered as a station.

(2) If [Station Set] button is clicked, confirmation box is displayed, then, click [OK] Registration is completed by this. For a while, the station coordinate data are changed, and confirm them. Treat [BackST Set] in the same method.

(3) Press the [ ] button located before [Station Set] button to display the registration history.

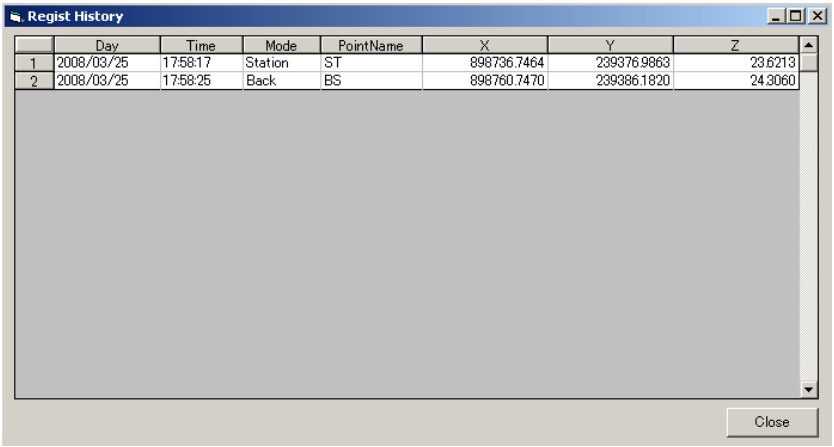

ROBOTEC SURVEY FILE MAINTENANCE

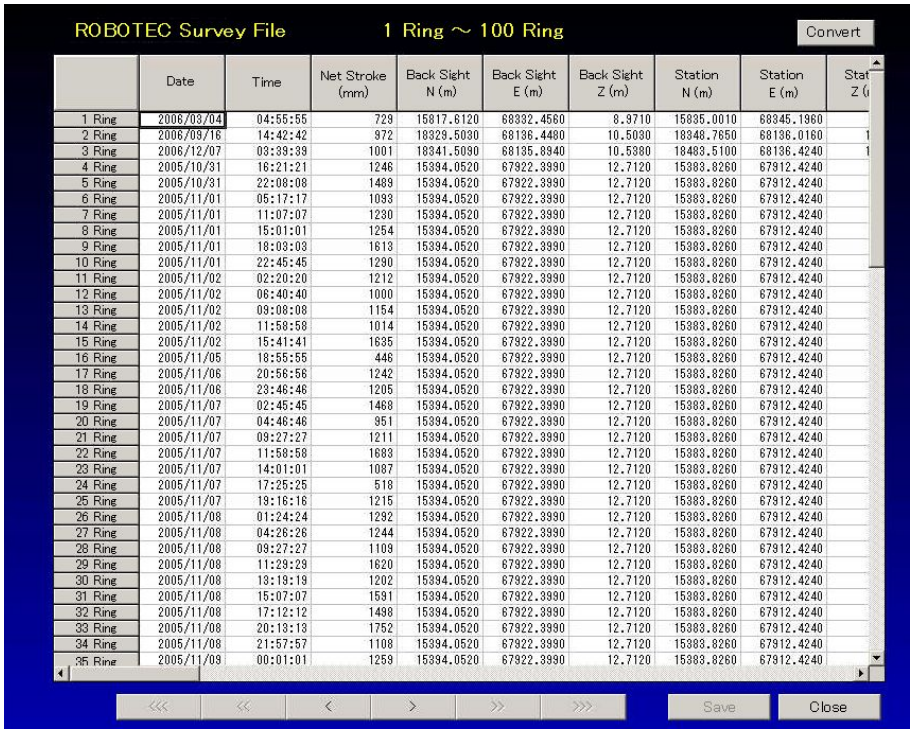

	Date	Time	Net Stroke (mm)	Back Sight N (m)	Back Sight E (m)	Back Sight Z (m)	Station N (m)	Station E (m)	Stat Z (m)
1 Ring	2006/08/04	04:55:55	729	15817.6120	68332.4560	8.9710	15835.0010	68345.1960	
2 Ring	2006/09/16	14:42:42	972	18329.5030	68136.4480	10.5030	18348.7650	68136.0160	1
3 Ring	2006/12/07	03:39:39	1001	18341.5090	68135.8940	10.5380	18483.5100	68136.4240	1
4 Ring	2005/10/31	16:21:21	1246	15394.0520	67922.3990	12.7120	15383.8260	67912.4240	
5 Ring	2005/10/31	22:08:08	1489	15394.0520	67922.3990	12.7120	15383.8260	67912.4240	
6 Ring	2005/11/01	05:17:17	1093	15394.0520	67922.3990	12.7120	15383.8260	67912.4240	
7 Ring	2005/11/01	11:07:07	1230	15394.0520	67922.3990	12.7120	15383.8260	67912.4240	
8 Ring	2005/11/01	15:01:01	1254	15394.0520	67922.3990	12.7120	15383.8260	67912.4240	
9 Ring	2005/11/01	18:03:03	1613	15394.0520	67922.3990	12.7120	15383.8260	67912.4240	
10 Ring	2005/11/01	22:45:45	1290	15394.0520	67922.3990	12.7120	15383.8260	67912.4240	
11 Ring	2005/11/02	02:20:20	1212	15394.0520	67922.3990	12.7120	15383.8260	67912.4240	
12 Ring	2005/11/02	06:40:40	1000	15394.0520	67922.3990	12.7120	15383.8260	67912.4240	
13 Ring	2005/11/02	09:08:08	1154	15394.0520	67922.3990	12.7120	15383.8260	67912.4240	
14 Ring	2005/11/02	11:58:58	1014	15394.0520	67922.3990	12.7120	15383.8260	67912.4240	
15 Ring	2005/11/02	15:41:41	1635	15394.0520	67922.3990	12.7120	15383.8260	67912.4240	
16 Ring	2005/11/05	18:55:55	446	15394.0520	67922.3990	12.7120	15383.8260	67912.4240	
17 Ring	2005/11/06	20:56:56	1242	15394.0520	67922.3990	12.7120	15383.8260	67912.4240	
18 Ring	2005/11/06	23:46:46	1205	15394.0520	67922.3990	12.7120	15383.8260	67912.4240	
19 Ring	2005/11/07	02:45:45	1468	15394.0520	67922.3990	12.7120	15383.8260	67912.4240	
20 Ring	2005/11/07	04:46:46	951	15394.0520	67922.3990	12.7120	15383.8260	67912.4240	
21 Ring	2005/11/07	09:27:27	1211	15394.0520	67922.3990	12.7120	15383.8260	67912.4240	
22 Ring	2005/11/07	11:58:58	1683	15394.0520	67922.3990	12.7120	15383.8260	67912.4240	
23 Ring	2005/11/07	14:01:01	1087	15394.0520	67922.3990	12.7120	15383.8260	67912.4240	
24 Ring	2005/11/07	17:25:25	518	15394.0520	67922.3990	12.7120	15383.8260	67912.4240	
25 Ring	2005/11/07	19:16:16	1215	15394.0520	67922.3990	12.7120	15383.8260	67912.4240	
26 Ring	2005/11/08	01:24:24	1292	15394.0520	67922.3990	12.7120	15383.8260	67912.4240	
27 Ring	2005/11/08	04:26:26	1244	15394.0520	67922.3990	12.7120	15383.8260	67912.4240	
28 Ring	2005/11/08	09:27:27	1109	15394.0520	67922.3990	12.7120	15383.8260	67912.4240	
29 Ring	2005/11/08	11:29:29	1620	15394.0520	67922.3990	12.7120	15383.8260	67912.4240	
30 Ring	2005/11/08	13:19:19	1202	15394.0520	67922.3990	12.7120	15383.8260	67912.4240	
31 Ring	2005/11/08	15:07:07	1591	15394.0520	67922.3990	12.7120	15383.8260	67912.4240	
32 Ring	2005/11/08	17:12:12	1498	15394.0520	67922.3990	12.7120	15383.8260	67912.4240	
33 Ring	2005/11/08	20:13:13	1752	15394.0520	67922.3990	12.7120	15383.8260	67912.4240	
34 Ring	2005/11/08	21:57:57	1108	15394.0520	67922.3990	12.7120	15383.8260	67912.4240	
35 Ring	2005/11/09	00:01:01	1259	15394.0520	67922.3990	12.7120	15383.8260	67912.4240	

Function

Robotec survey and calculation result files are maintained.

The data are stored in units of entire rings.

Jump-back buttons :

<< 1000 rings < 100 rings

Jump-forward buttons :

>> 1000 rings > 100 rings

Convert button is used to convert the file into CSV format.

The file is converted and saved as follows.

D : ¥ARiGATAYA¥TextRepo¥Geosurv.Csv

Error Message List

[Messages:]	[Description:]
(1)Total Station Power On Failure:	The total station cannot be powered on. Check the communication cable and connector. Power on/off the total station and interface.
(2)Total Station Power Off Failure:	The total station cannot be powered off. Check the communication cable and connector. Power on/off the total station and interface.
(3)Level Compensator Failure (233):	Since leveling inclines by 6 minutes or more, correction cannot be made. Adjust with the air-bubble tube and run the level compensator again.
(4)Level Compensator Failure (1):	Leveling moved by 6 minutes or more in mid-session. Adjust on the leveling stand and check to see if the known point has moved.
(5)Back Sight Angle 0 Reset Failure:	The back sight cannot be reset to 0 successfully. Check to see if the back sight or station has moved. Retry after a while.
(6)Back Sight Search Failure Check Required:	The back sight cannot be searched. Check the back sight.
(7)Back Sight Error (Large) Failure:	Although the back sight was searched, the error is larger than the set value. Check to see if the known point has moved. Since the V-angle is compared through reverse calculation from the height of the known point, check the height of the known point.
(8)Search Range Setup Failure:	The search range is faulty. Check the search range set value in the setup screen.
(9)Face Target Search Failure (No.X):	It was impossible to find the target. Check to see if this is a temporary failure.
(10)Same Target Searched (Failure):	See "TS is powered on successfully but Robotec survey is not successfully performed" in troubleshooting.
(11)Search Failure:	It was impossible to search the desired target. Another target is automatically searched.
(12)Measure Distance Failure:	Measurement is impossible because the prism is invisible. Check to see if this is a temporary failure.
(13)Target state LOCK: NG, LIGHT WAVE: NG	The target cannot be locked or the prism is invisible. There is no problem if recovery occurs after a while. Otherwise, check is required.
(14)Communication Failure (Total Station Power Failure or Cable Not Connected):	A communication failure has occurred. Power off on the individual operation screen. Power on approximately 10 seconds later. If recovery does not occur, check to see if the total station is power off and check for the cable broken or connector failures.

If Effects of Electromagnetic Wave Are Considered

In daily operation, there is no problem if the H-angle is close to 0.0000 when the back sight is searched. If days indicating 30 seconds to about 1 minute continue, effects of the electromagnetic wave are considered.

Avoiding method

The level compensator is a feature that is most affected by the electromagnetic wave. (Automatic leveling correction)
Resetting (Turning off) this feature allows for accurate indication of an angle.
However, since leveling that is almost perfect is necessary, leveling upon shifting should be carefully performed. The total station has an electronic air-bubble tube (at an accuracy of 7 seconds). Using it for leveling is recommended.

Leveling with the electronic air-bubble tube

(1) Connect a cable to the total station, remove the cover, and attach a keyboard.

(2) Press [PWR] for power on.

(3) If the electronic air-bubble tube is displayed, press [ENT] .
(The original state restores after a half turn.)

```
・・・・・・・・・・・  ■ ■  ・・・・・・・・・・
・・・・・・・・・・・  ■ ■  ・・・・・・・・・・
・ AIR TEMPARATURE ＝ 20.0 ■ [ENT]
・ AIR PRESSURE ＝ 760.00 ■ [ENT]
・ OFFSET ＝ 0.000 ■ [ENT]
・ ZERO SET ＝ ■ [ENT]
```

(4) Angles are displayed.

```
STD  PO    XX:XX
HA:            XX:XX:XX
VA:            XX:XX:XX
```

(5) Turn off the compensator.
Press [F] [2] [2] [ENT] [0] [ENT] in order.

(6) Display the detailed electronic air-bubble tube.
Press [▭] (Air-bubble N) .

```
・・・・・・・・・・・  ■ ■  ・・・・・・・・・・
・・・・・・・・・・・  ■ ■  ・・・・・・・・・・
```

As shown above, align ■ on the center.
When adjustment is completed, press [▭] to display angles.

(7) Power off. Press [PWR] for power off.

(8) Remove the keyboard and replace with the keyboard cover.

(9) On the PC's individual operation screen, turn off the compensator with [Level Auto Compensator] ☐ ON ☑ OFF .

(10) If the compensator is turned off, attach the keyboard in daily operation and check to see from time to time to see if there is any problem in leveling.

Total Station Manual Operation

For manual survey using the total station, a simple operating method is described below.

(1) Since the keyboard cover is attached for automatic operation, replace it with the keyboard.

(2) Set the auto lock mode.

RPU

・ [↑] [1] [1]

(3) Reset the back sight.

・ [F] [2] [1] [ENT]

・ ZERO SET = [0] [ENT]

(4) Measure distance.

・ [D] [A/M] Completion of measure distance (SD display) and then [A/M] .

Others

(5) Detailed electronic air-bubble tube displayed/hidden.

・ [▭]

(6) Compensator ON/OFF

・ [F] [2] [2] [ENT]

・ ON [1] [ENT]

・ OFF [0] [ENT]

Note: If manual operation is completed, be sure to replace the keyboard with the keyboard cover. Otherwise, the system does not work.

enzan

Robotec Survey 29/Jun/1998 17:08:07

Ring No. : 8 17/Jun 16:26 Robotec Chainage:8.012 Netstroke:826 mm

---

	N	E	Z	
Back Sight	-6806.948	2519.295	292.836	P-000
Station	-6883.022	2579.752	295.020	P-001

	H-Agl(D.MS)	V-Agl(D.MS)	Distance(m)	N	E	Z
Target No.1	355.2754	90.4614	152.395	-6771.595	2475.810	292.972
Target No.3	355.3627	90.5103	140.961	-6779.719	2483.867	292.928

	Pitch(deg)	Roll(deg)	Gyro(deg)	Level(m)
Survey-T	0.14	0.02	0.00	0.00

[Calc Results]

<-------- Tail -------->			<-------- Center -------->			<-------- Head -------->		
N	(m)	-6780.870	N	(m)	-6775.216	N	(m)	-6769.562
E	(m)	2483.562	E	(m)	2478.335	E	(m)	2473.108
Z	(m)	290.992	Z	(m)	291.011	Z	(m)	291.030
Chainage	(m)	-7.388	Chainage	(m)	0.312	Chainage	(m)	8.012
Hor-Dev	(m)	0.008	Hor-Dev	(m)	0.006	Hor-Dev	(m)	0.003
Ver-Dev	(m)	0.005	Ver-Dev	(m)	0.008	Ver-Dev	(m)	0.011
Bearing	(deg)	317.248	Bearing deviation		0.048	Bearing	(deg)	317.248

Horizontal

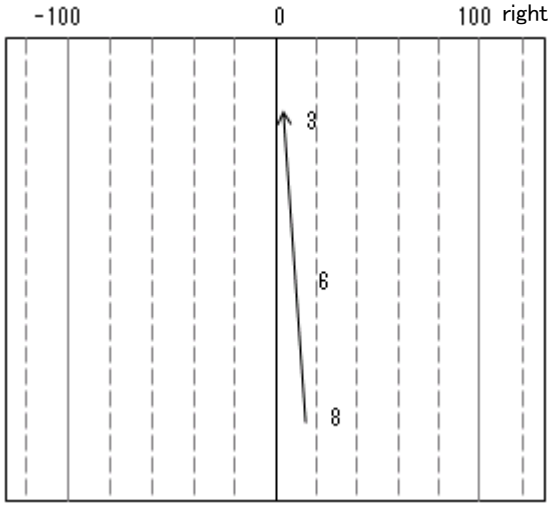

Vertical

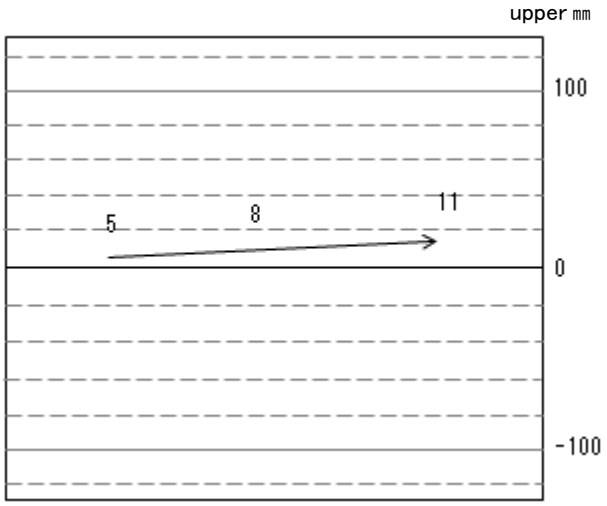

Survey Point List 29/Jun/1998 17:08:40

Name	N Crd(m)	E Crd(m)	Z Crd(m)	Bring(D.MS)
P-002	-6990.3384	2657.5096	291.6693	144.0427
P-001	-6883.0220	2579.7520	295.0200	
P-000	-6806.9480	2519.2950	292.8360	

Prism List 29/Jun/1998 17:08:47

Name	X Crd(m)	Y Crd(m)	Distance(m)
TgtNo.1	1.9500	0.6050	3.3700
TgtNo.2	1.9500	0.7980	9.0380
TgtNo.3	1.9380	1.0050	14.7570
TgtNo.4	0.0000	0.0000	0.0000
TgtNo.5	0.0000	0.0000	0.0000

Trouble Shooting:

Component representation

TS	Total station	(Distance measuring unit, main body Trimble)
SCU	Communication converter	(Yellow, small box RS422 → RS232C communication converter, 100 to 240V power required)
I/F Box	Interface	(Installed on the operation cart, 100V power required)
Hub	Concentrator	(Contained in I/F box, white, LAN cable connected)
FA-M3	Sequencer	(Contained in I/F box, blue, shutter opening/closing ant TS controlled)
Back PC	PC for pit operation display	(Operation display PC) Intelligent TM
TS to SCU Cable	Cable between TS and SCU	(Gray, 2m)
SCU to I/F Cable	Cable between I/F box and SCU	(Black, 200m)
RCU-1	Back sight power supply unit	(Yellow, small box, 100 to 240V power required)
RCU-3	Shutter opening/closing controller	(Yellow, small box, power not required: connected to I/F box to supply power)

Symptom: TS power ON is not displayed successfully. The shutter does not work successfully.

(1)SCU

◆Is the SCU power lamp lit?	◆Press the switch and ensure that the lamp is lit.
◆Is the cable between TS and SCU connected without problems?	◆Again, re-insert the connector. Also, insert and remove the connector on the TS side.
◆Isn't the cable between TS and SCU damaged? (Damages due to spark during welding, damages around the connector, etc.)	◆The first-aid repair for the damaged part is necessary. Consult the mechanical/electrical personnel for recovery. This is just a first-aid means, so we will send a replacement. Please contact us.
◆Is the SCU power supplied successfully (100 to 240V)?	◆With a tester, check the current value supplied. In many cases, the current value during excavation is different from that during stop.

(2)TS

◆Can power be turned on from the TS switch or keyboard cover switch?	◆Recheck connection between TS and SCU. Ensure that the connector to be inserted into the TS is not dirty. ※Upon power on, a "beep" tone occurs.
◆Aren't the keyboard left connected to the TS?	◆Remove the keyboard plus LCD screen and attach the keyboard cover.
◆Has TS leveling been adjusted properly?	◆Attach the prism-base air-bubble tube or keyboard and re-adjust while watching the electronic air-bubble tube.
◆Doesn't the installed stand vibrate?	◆Stand reinforcement is required. Apply reinforcement to avoid vibration. A compensator failure may occur. (Initialize the compensator by powering on/off the TS.)

(3) I/F Box (Check operation after power OFF→ON with the breaker contained in the I/F box)

◆Is power supplied to the I/F box? (Power is supplied if the RDY lamp on the top of FA-M3 is lit.)	◆Check the power supplied. (Turn OFF/ON the I/F breaker.)
◆Is the power supplied to the hub unit OK?	◆Check the power supplied. Power OFF/ON the hub.
◆On connections of the LAN cable connected to the hub unit, are all lamps lit?	◆Remove the LAN cable and reconnect it. Use another insertion port to the hub.
◆Isn't the communication cable between I/F and SCU damaged? (Damages due to spark during welding, damages around the connector, partially thinner cable, etc.)	◆The first-aid repair for the damaged part in necessary. Consult the mechanical/electrical personnel for recovery. This is just a first-aid means, so we will send a replacement. Please contact us.
◆Isn't there any problem in the communication cable and connection of connectors between I/F and SCU? (Connectors on both ends, extension joints)	◆Again, re-insert the connector. A click sound occurs upon insertion.
◆Isn't the communication cable between I/F and SCU close to a high-voltage line?	◆For wiring, a distance (at least 500 mm) from the high-voltage line must be provided. A communication failure due to noise is likely to occur.

(4) Target prism (RMT) shutter

◆Open the shutter by hand. Isn't any problem such that the shutter is not smooth or cannot be opened?	◆The shutter must be replaced. Please contact us.
◆After the shutter is opened, is it closed normally?	◆The shutter must be replaced. Please contact us.
◆Dose the shutter move normally if the RMT side connection is removed among wires from RCU-3 connected to the shutter ant RMT?	◆A RMT failure is considered if the shutter alone moves normally. Since replacement is necessary, please contact us.
◆In the I/F box, is the shutter No. lit on YC08-ON of FA-M3? (On the individual operation screen, turn ON the shutter forcibly for check.)	◆If the shutter is not open although the lamp is lit, an RCU-3 failure or cable wire break is considered. Please contact us.

Symptom: TS is powered on but Robotec survey is not performed successfully.

(1)Check the coordinates of the station and back sight.	◆Check to see if the coordinates of the back sight and station on the left top of the Robotec main screen are correct. ◆Aren't the station and back sight set reverse? ◆Again, register the back sight and station.
(2)Check the set value on the prism setup screen.	◆Check to see if the set values of TgtNo.1, TgtNo.2, and TgtNo.3 are correct?
(3)Check the machine excavation distance. (Upon Robotec survey, the machine turns toward the back sight.)	◆Close the Robotec screen and display the data monitor screen. ◆Manually enter the approximately correct distance on the plan alignment for the current value of the cumulative distance (articulate).
(4)Power OFF/ON the I/F box.	◆Power OFF/ON the IF.
(5)Restart the back PC.	◆Restart the back PC.
(6)Perform Robotec survey.	◆Perform Robotec survey to check to see if it works successfully. (If Robotec has not been operated for several hours, reset and search the back sight and then perform Robotec survey.)
(7)The target cannot be detected.	
◆Is the visibility of the target reserved?	◆Check from the TS with a telescope to see if there is any obstacle. Adjust the telescope focus to check obstacles such as the closest cable (hose). ※From the TS, the cavity (that irradiates infrared ray which is searched by the TS) below the red LED that blinks while the shutter is open should also go visible in addition to the prism in the shutter. ◆Check to see if the cavity is covered with mud or it is invisible from the TS. At least a field of vision with a size of softball must be reserved around this cavity.
◆For the back sight, is power always supplied?	◆Check to see if the RCU-1 supplies power to the back sight RMT successfully.
◆Isn't there any reflecting material or light source causing mistake?	◆Remove the reflecting material and light source.
◆No target exists in the search area.	◆With [Setting]-[Search area], expand the search area. ◆Turn the TS toward the back sight manually, reset the H-angle to 0, and perform Robotec survey. ◆Check to see if "reverse" (V-angle near 270 degrees) of two faces is set.

Symptom: The breaker of the interface panel has tripped.

(1)It trips again immediately after being reset.	◆See if there is anything wrong (short circuit, etc) with the power-related wiring inside, and outside the panel.
(2)Verification after resetting	◆Communication with SCU (successful startup action of TS after restoring power) ◆Communication with the ground station (LNK indication light of WAN on the SDSL modem is ON) ◆Check the ring number and the operation mode displayed on the PC monitor (both the ground and tunnel PC). Correct them if they do not echo the actual operation status.

Symptom: Power outage of PC (Ground or tunnel PC)

(1)Verification after being restarted	◆Communication with the interface panel in the tunnel (LNK indication light of WAN on the SDSL modem is ON) ◆Check the ring number and the operation mode displayed on the PC monitor (the ground or tunnel PC). Correct them if they do not echo the actual operation status.

Symptom: Daily precautions

(1)Did you search the back sight today?	◆Search the back sight once a day when excavation is not being performed to check the error. (The error should be checked in the field.) ◆Also, check the H-angle on the Robotec screen. If the error is large, reset the back sight. Effects of electromagnetic wave noise from the inverter, etc. are considered.
(2)Did you check between the targets today?	◆If a large movement is admitted, re-survey is required. Also, check for target damages.
(3)Is the communication cable between I/F and SCU OK?	◆Check to see if the communication cable is pulled as the machine advances.

If normal operation cannot be performed despite of the check above, please contact us.

ENZAN KOUBOU Co., Ltd.
URL:http://www.enzan-k.com

<Head Office>
237-3 Yamazato-cho, Kamigyo-ku, Kyoto 602-8268, Japan
TEL. +81-75-417-0100 FAX. +81-75-417-0200

<Tokyo Branch>
9F., Shirakawa Bldg. Ⅲ., 2-25-4, Higashinihonbashi, Chuo-ku,
Tokyo 103-0004, Japan
TEL. +81-3-5822-4200 FAX. +81-3-5822-4210

Ring Arrangement – ①

Segment types and its key positions of the segment building plan in the future are automatically calculated.

It is optimumly planned by the current meander and the settling distance specification.

And the setting by the manual operation is also available. For the manual setting, refer to the manual "Survey Function".

Usage

Click [Seg Type] to display the Ring Arrangement setting sub-window.

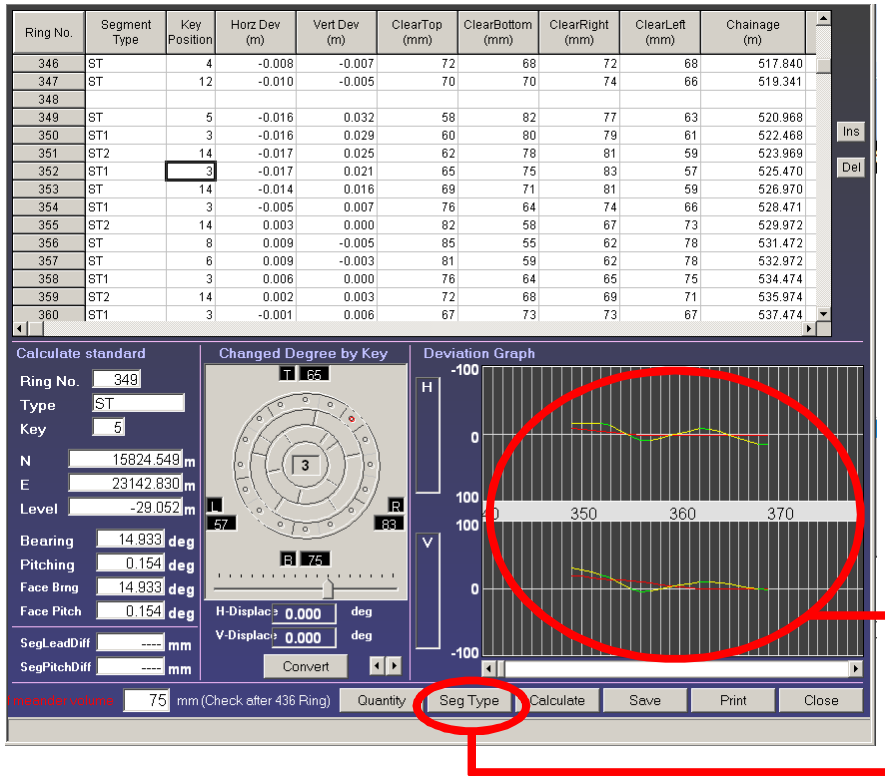

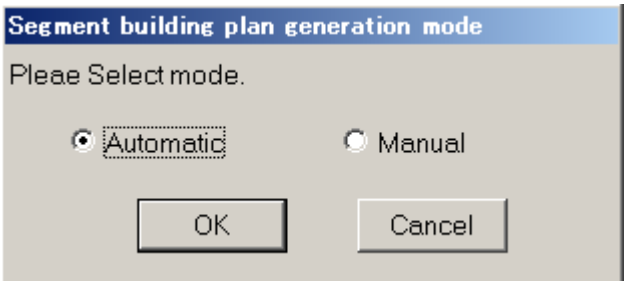

Select mode "Automatic" or "Manual"
And press "OK" button.

- Automatic setting :Seg. type & K piece position automatic setting.
- Manual setting :Seg. type & K piece position manual setting.

The target alignment line of the machine orbit is calculated from the "Calculate Standard" machine coordinates, and the segment deviation graph calculated at the segment type and the key position matched to the target alignment is displayed.

Ring Arrangement – ②

Following window is displayed when you select "Automatic" and click "OK".

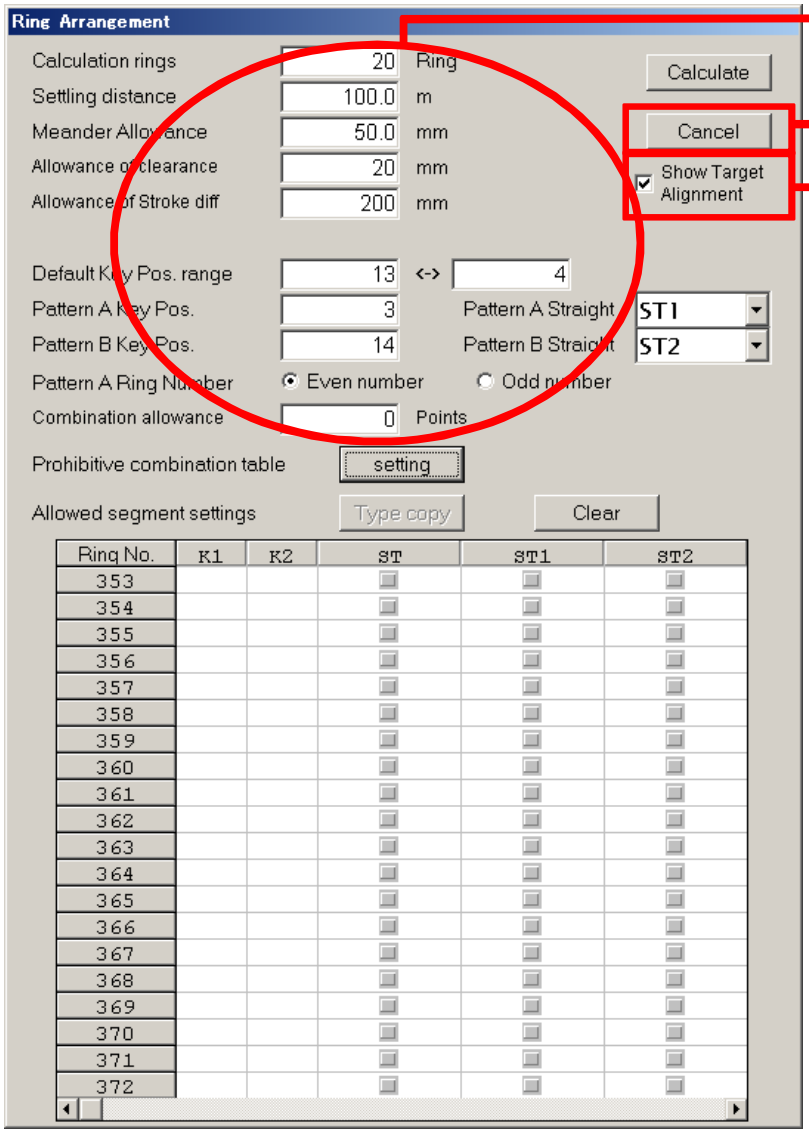

Calculation rings	Set the number of rings to be simulated. Max 20 ring can be set.
Settling distance	Set the distance to settle the current meander.
Meander allowance	Set the maximum meander against the target alignment.
Allowance of clearance	Segment clearance becomes smaller than set value is not selected.
Stroke diff allowance	Segment stroke diff. grows more than set value is not selected.
Default Key Pos. range	Set the building range of the key segment. (Clockwise)
Pattern A KeyPos.	Set the key position in the pattern A.
Pattern B KeyPos.	Set the key position in the pattern B.
Pattern A Straight	Set the type of straight segment for the pattern A when it is limited.
Pattern B Straight	Set the type of straight segment for the pattern B when it is limited. Only when a straight segment is registered, the straight segment for pattern A and B can be set.
Pattern A Ring Number	Set the pattern A for odd number ring or even number ring.
Combination allowance	Set the allowable number of the piece joint continuation with the previous segment(shaft side).
Cancell	Quit the ring arrangement function without calculation.
Show target alignment	when checked, the target alignment line is displayed on Viewer window and Robotec window. (red line as below figure)

Ring Arrangement – ③

Prohibitive combination table setting

Specify the number of the piece joint continuation at each key position with the previous ring at the first key position.

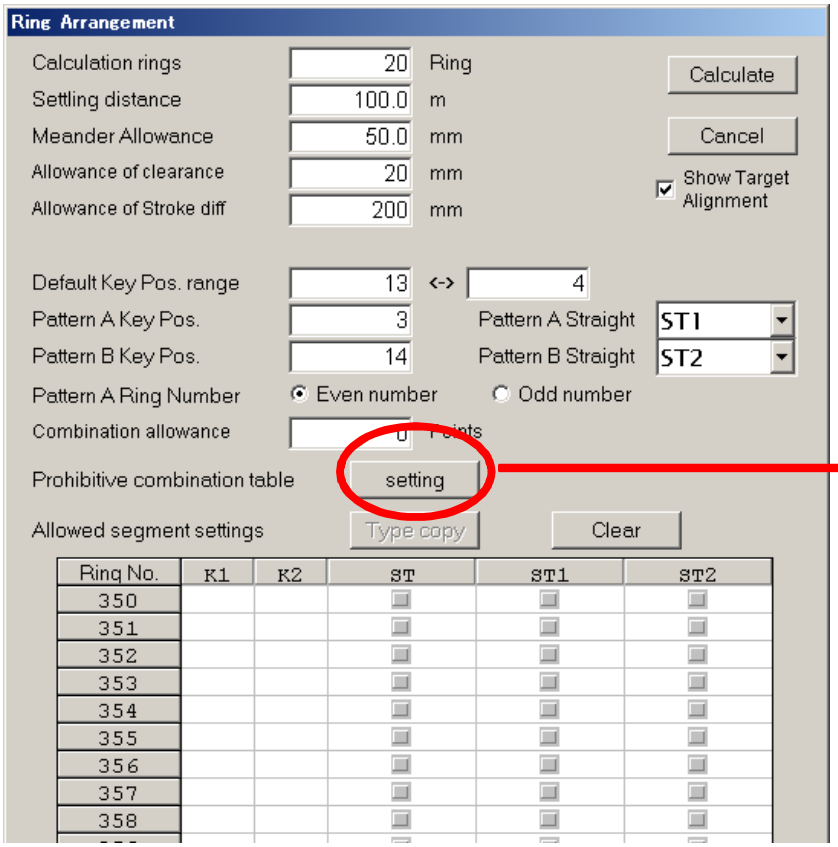

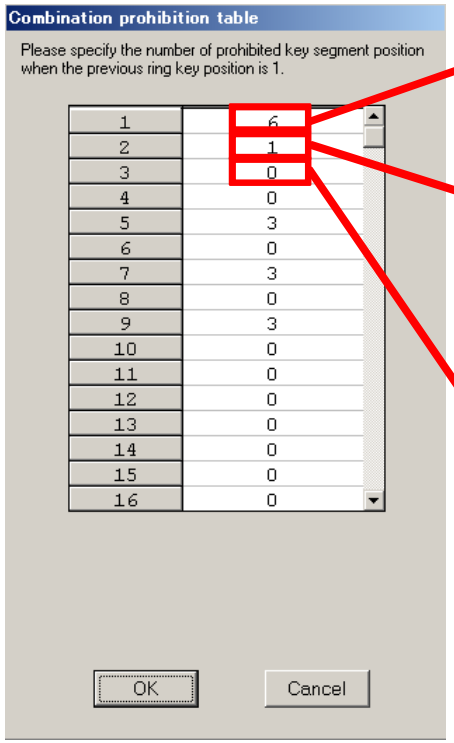

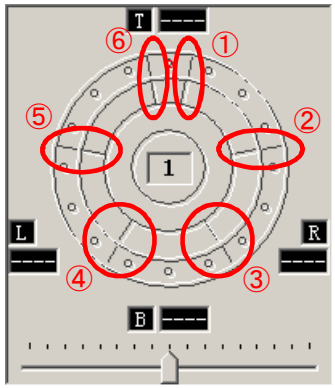

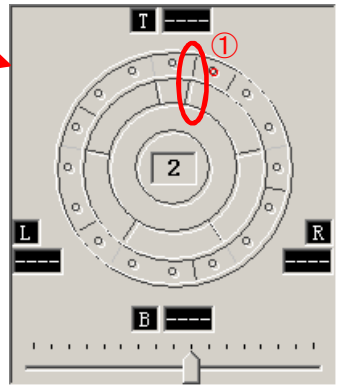

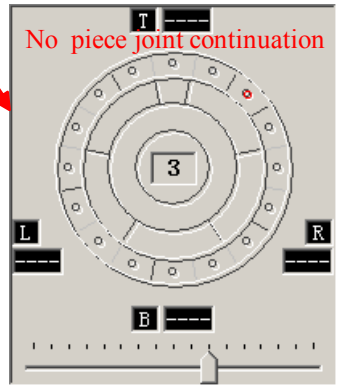

Example)Key position of the previous ring as 1st position.

K pos. of this ring as the 1st : number of continuation is 6.

K pos. of this ring as the 2nd : number of continuation is 1.

K pos. of this ring as the 3rd : number of continuation is 0.

Ring Arrangement – ④

Allowed segment type settings

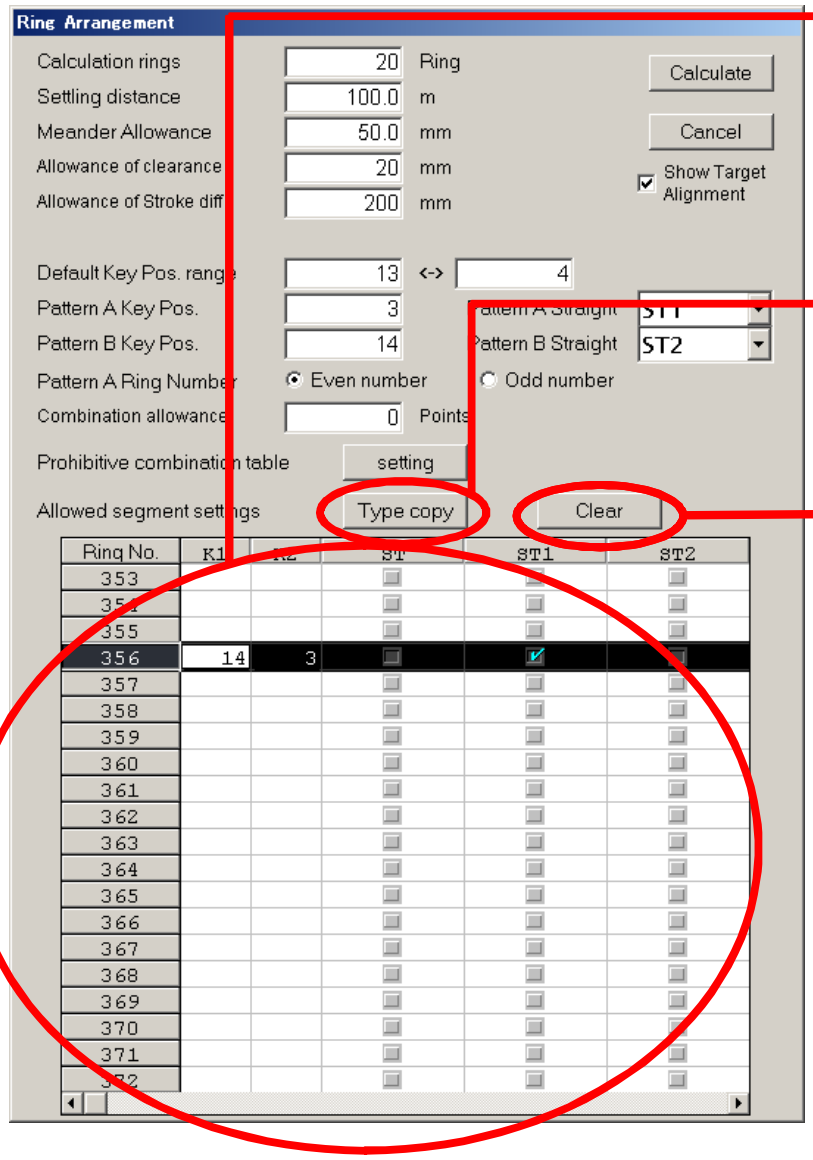

Allowed segment type setting

K1,K2	The range of the key positon at each ring can be specified. If no entry,"Default Key Pos.Range" values in the header are applied.
Seg. type setting	Check if you want to specify the segment type for the certain ring(s).

"Type copy" button will be enabled if the ring number(s) is selected and dragged.Set the range of rings to copy.

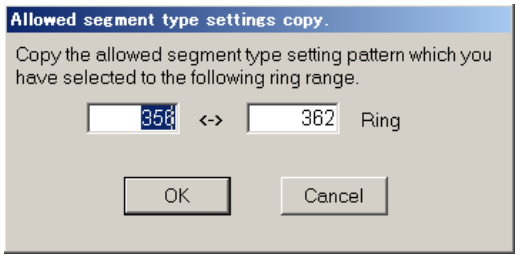

Apply the conditions of rings in the selected range to the range with the entered ring numbers.

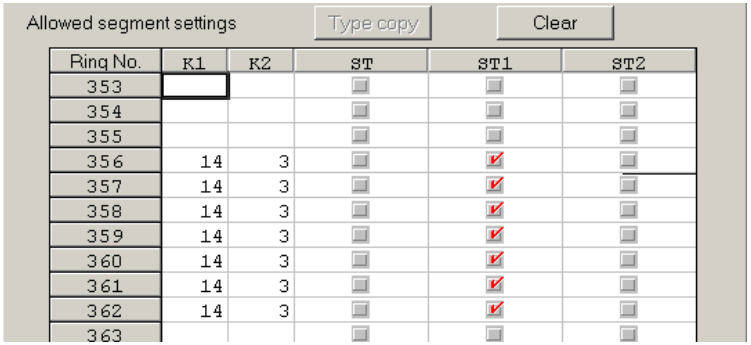

When "clear" button is clicked, the allowed segment settings are cleared.

Ring Arrangement – ⑤

Execute Calucutation

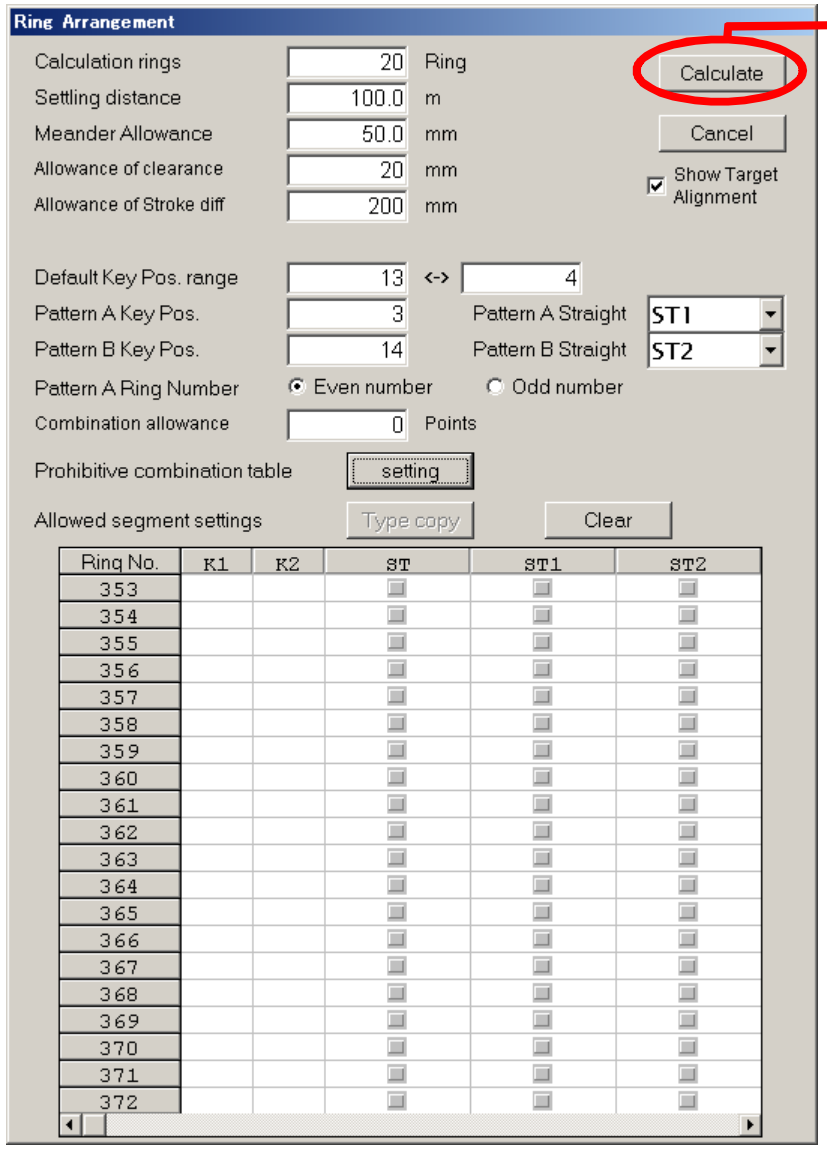

All setting is completed and press "Calculate" button, the target alignment starting position dialog box is shown on the screen. At this time, if the setting is wrong, the confirming message is displayed as follow.

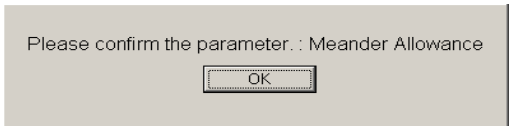

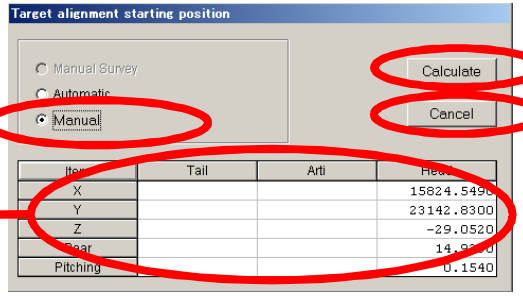

Select setting method from follows:Manual Survey,Automatic,Manual.

If "Manual" method is selected, set data in the spread sheet by hand.

The estimated position of the machine is set to the spreadsheet from data by segment survey and the target alignment line.It is possible to simulate the machine orbit by setting data operation.

When "Cancel" button is pressed,"target alignment starting position" dialog box is closed without exceciting the calculation.

when all the settings are completed and the "calculate" button is pressed. calculation is executed ,and the maximum deviation of the simulated target alignment line against the designed tunnel alignment.

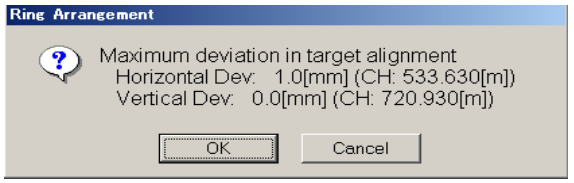

When the OK button is clicked, calculation results are reflected in the table and deviation graph.

Ring Arrangement – ⑥

Error message

The position would be unsuitable which is used as the starting point of simulation.Please reconfirm the starting ring number or position and posture of the starting position.

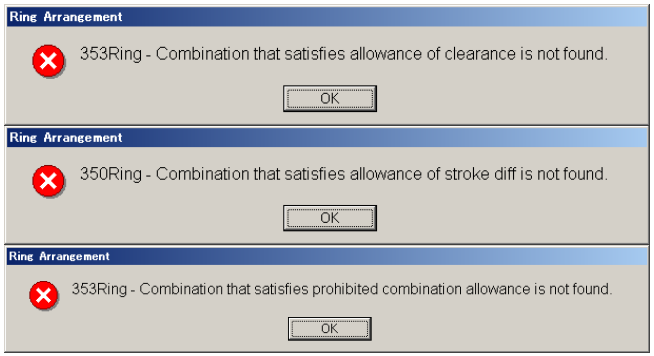

The combination of the segment and key position which can secure clearance does not exist. It is necessary to reset up parameters.

As the setting method

1) Extend the meander settling distance.

2) Decrease the meander allowance.

3) Decrease the allowance of clearance.

4) Increase the stroke difference allowance.

5) Increase the number of combination allowance.

Set the the parameters again like this,and you can get further optimized ring arrangement.

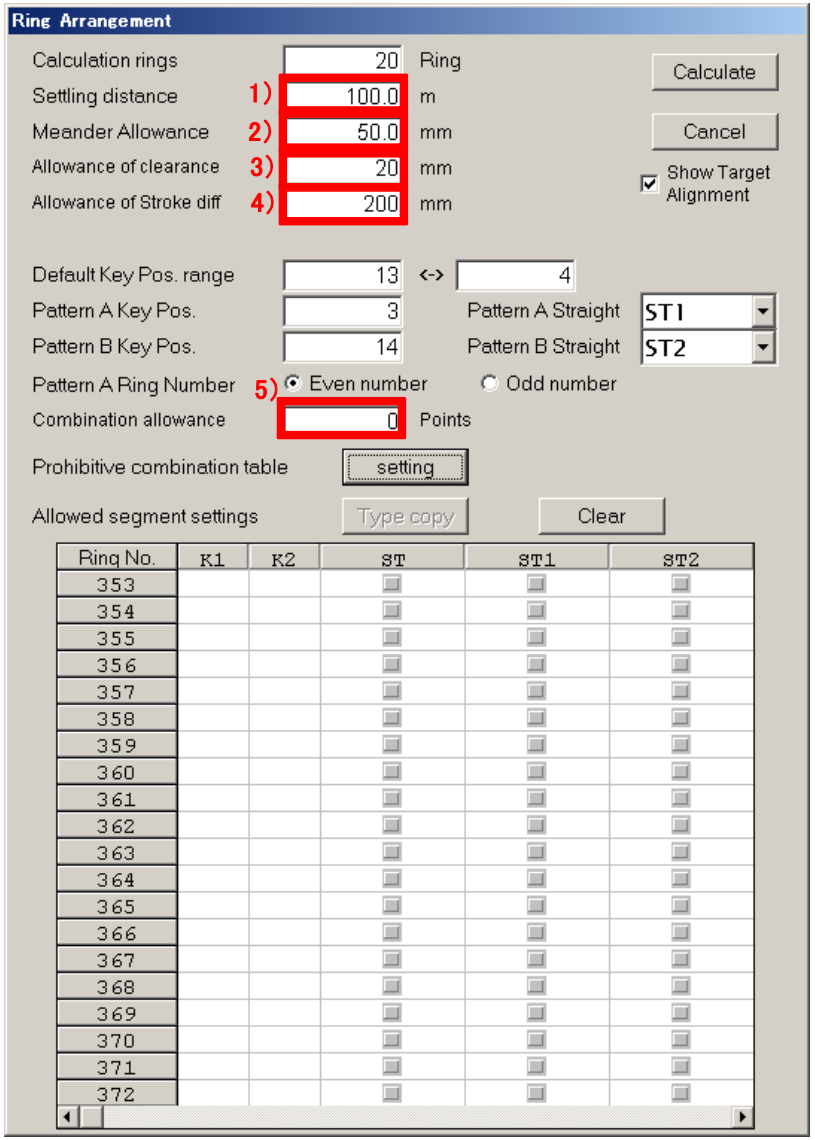

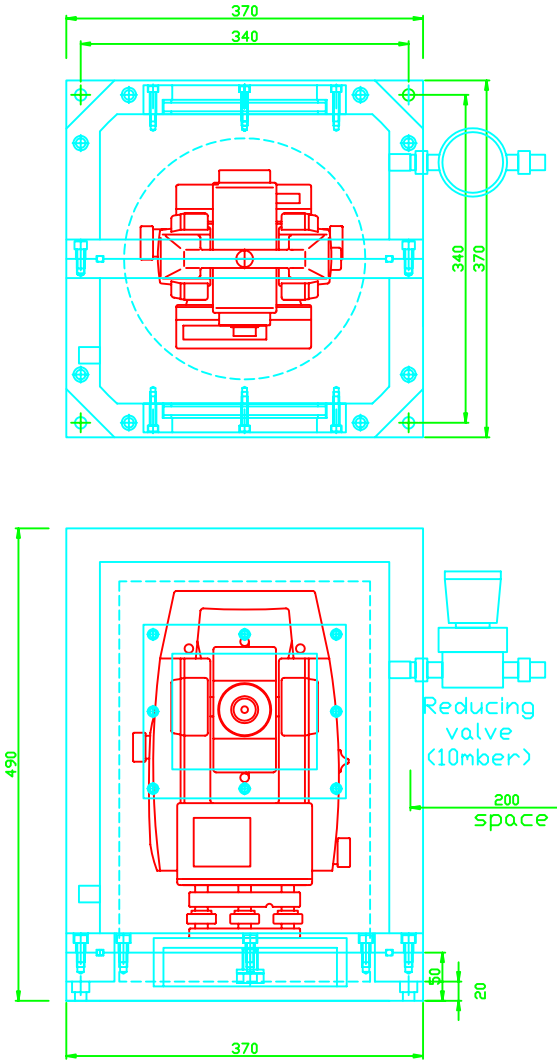

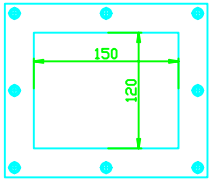

Weight	kg

		DR. T.Moriguchi	DWG No. E1204000-0	Title: Theodolite Purge BOX
		CH.		
REV.	DATE 2012.05.23	APP.	P/N 03035200	Page

enzan kouboU

MODEL EPB2016-376/377
SECTION 20 • Walkways and Ladders

1. Forward scaffolding assembly drawing

2. Rear scaffolding assembly drawing

NOTES:

1. REMOVE ALL BURRS & BREAK SHARP EDGES.

2. ALL WELDING SHALL MEET THE REQUIREMENTS OF THE LATEST EDITION OF THE AWS STRUCTURAL WELDING CODE - ALL SECTIONS AS APPLICABLE UNLESS OTHERWISE NOTED. USE E70XX LOW HYDROGEN ELECTRODES OR EQUIVALENT.

QTY	PART No.	DESCRIPTION	DWG No.	WT. Total	ITEM
1	1035774	FWD SCAFFOLD, A	1035774	204.5 kg	1
1	1035757	FWD SCAFFOLD B	1035757	107.1 kg	2
1	1033962	MIDDECK WELD, FWD SCAFFOLD	1033962	193.0 kg	3
1	1035813	SCAFFOLD, REMOVABLE	1035813	9.9 kg	4
1	1035814	SCAFFOLD, DECK COVER	1035814	14.6 kg	5
1	1034486	SUPPORT, SCAFFOLDING	1034486	8.3 kg	6
1	1035772	SUPPORT, SCAFFOLDING	1035772	35.8 kg	7
1	1035773	SUPPORT, SCAFFOLDING	1035773	34.9 kg	8
4	1030526	SCAFFOLD SUPPORT	1030526	28.5 kg	9
1	1035862	DECK BRACE	1035862	18.0 kg	10
1	1034483	STAIRS	1034483	78.8 kg	11
1	1035808	STAIRS	1035808	35.6 kg	12
3	1033307	HANDRAIL	1033307	30.3 kg	13
1	1033310	HANDRAIL	1033310	19.1 kg	14
2	1034496	HANDRAIL	1034496	38.8 kg	15
1	1035785	HANDRAIL	1035785	25.9 kg	16
1	1035807	HANDRAIL	1035807	26.3 kg	17
1	1035836	HANDRAIL	1035836	15.8 kg	18
1	1035837	HANDRAIL	1035837	16.3 kg	19
1	1035838	HANDRAIL	1035838	19.0 kg	20

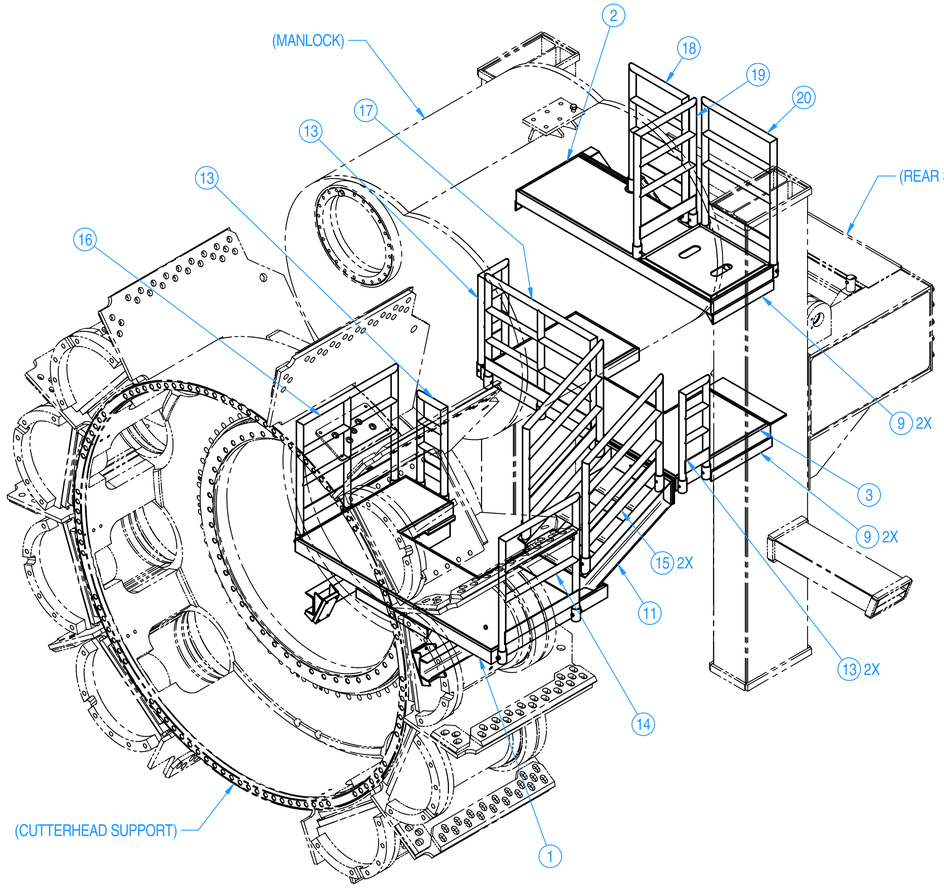

TRC P/N 1002646
FWD SCAFFOLDING ASSEMBLY
ISO VIEW
1:20

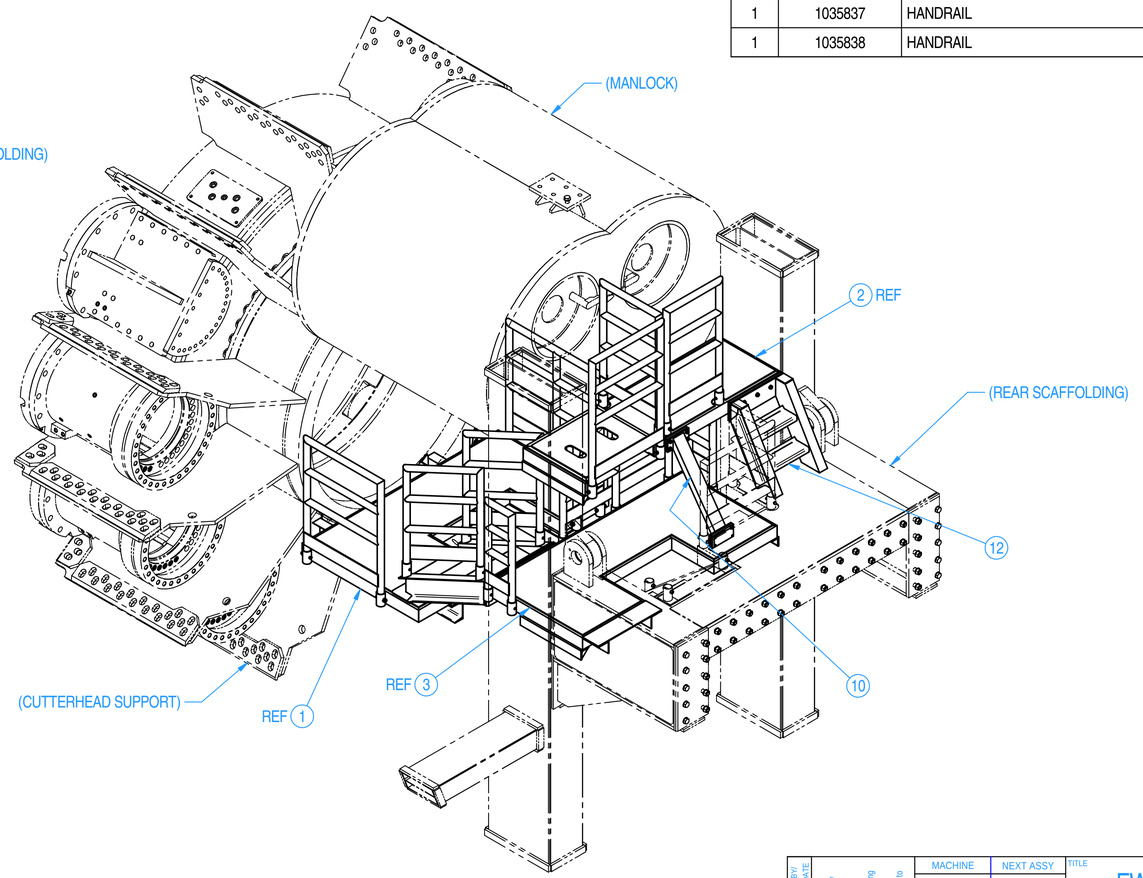

TRC P/N 1002646
FWD SCAFFOLDING ASSEMBLY
ISO VIEW
1:20

PROPRIETARY NOTICE:
The information contained herein is the sole property of The Robbins Company, and remains their sole property. It shall not be duplicated in full or part, used for manufacturing purposes or otherwise without the written consent of The Robbins Company. By accepting this information, recipient agrees to abide in full by the terms of this proprietary notice and will be liable for any violations of this notice. This material is on loan only, and is to be returned upon request to The Robbins Company.

MACHINE	NEXT ASSY
EPB2110-365	1002640

UNLESS NOTED ALL DIMS ARE mm
TOLERANCES UNLESS NOTED
0-300 ±1.5
300-1500 ±3
1500-6000 ±6
6000+ ±12
MACHINED FEATURES
X ±1.5
X.X ±1.0
X.XX ±.40
X.XXX ±.100
ANGLES ±1°
SURFACE FINISH 3.2
DIMENSIONS (X) ARE REF
ALL GEOMETRIC DIMENSIONING & TOLERANCING PER ANSI Y14.5M-1982 AS APPLICABLE

TITLE: FWD SCAFFOLDING ASSEMBLY

SIZE D | DWG No. 1002646 | REV 0 | SHT 1 OF 3 | SCALE: SEE DETAIL, DO NOT SCALE

DRAWN C.ROHDE 12/17/2011
CHECKED J.HEINEMAN 12/19/2011
APPROVED J.HEINEMAN 12/20/2011
THIRD ANGLE PROJECTION
WEIGHT TOTAL: 960.5 kg

Robbins
www.TheRobbinsCompany.com

1002646

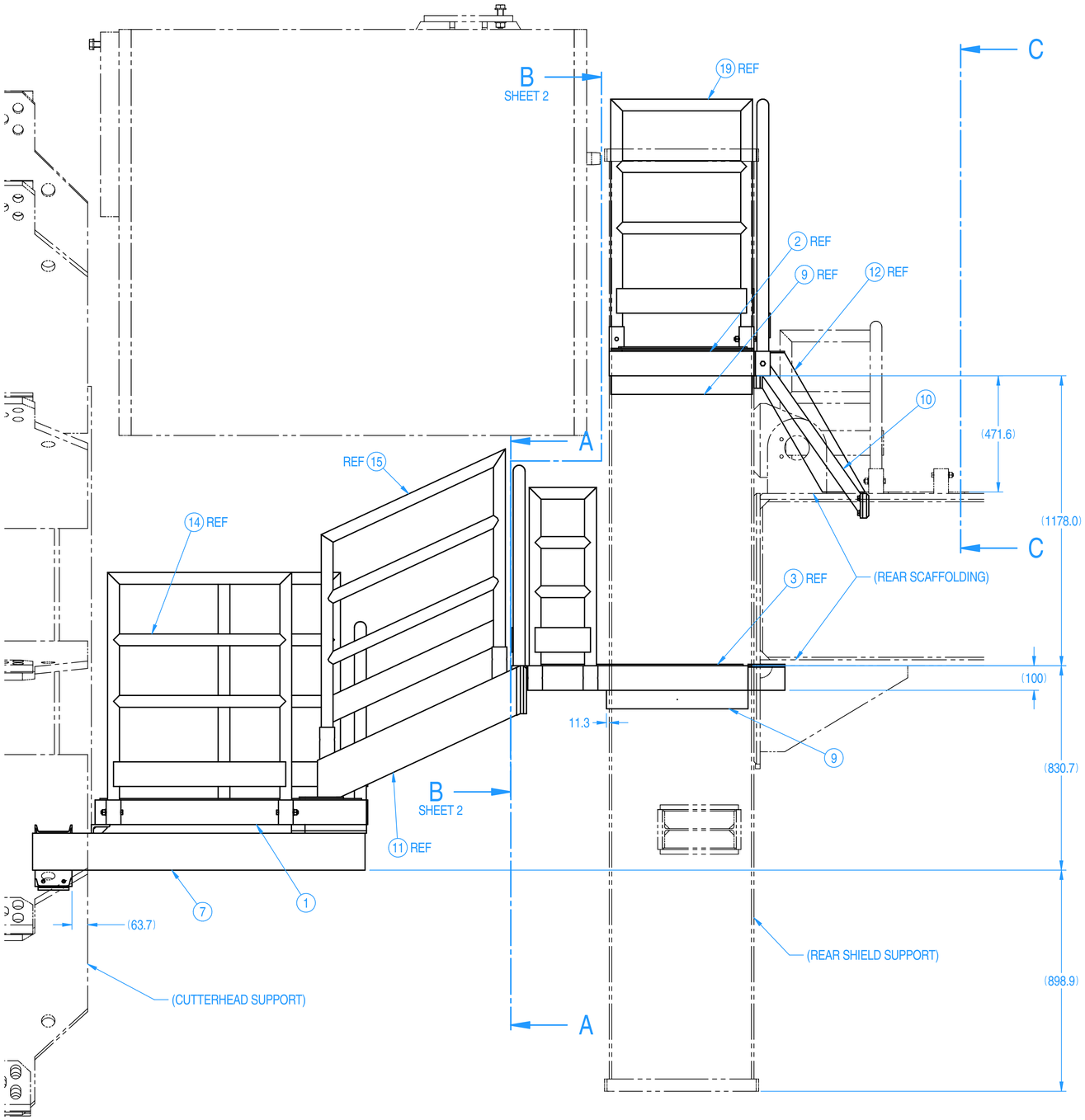

SIDE VIEW
1:10

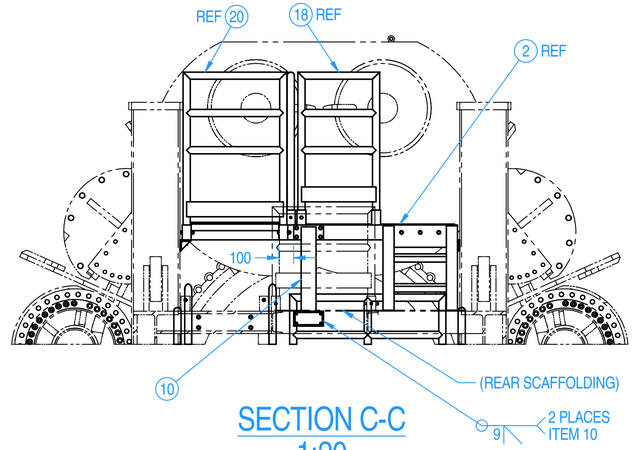

SECTION C-C
1:20

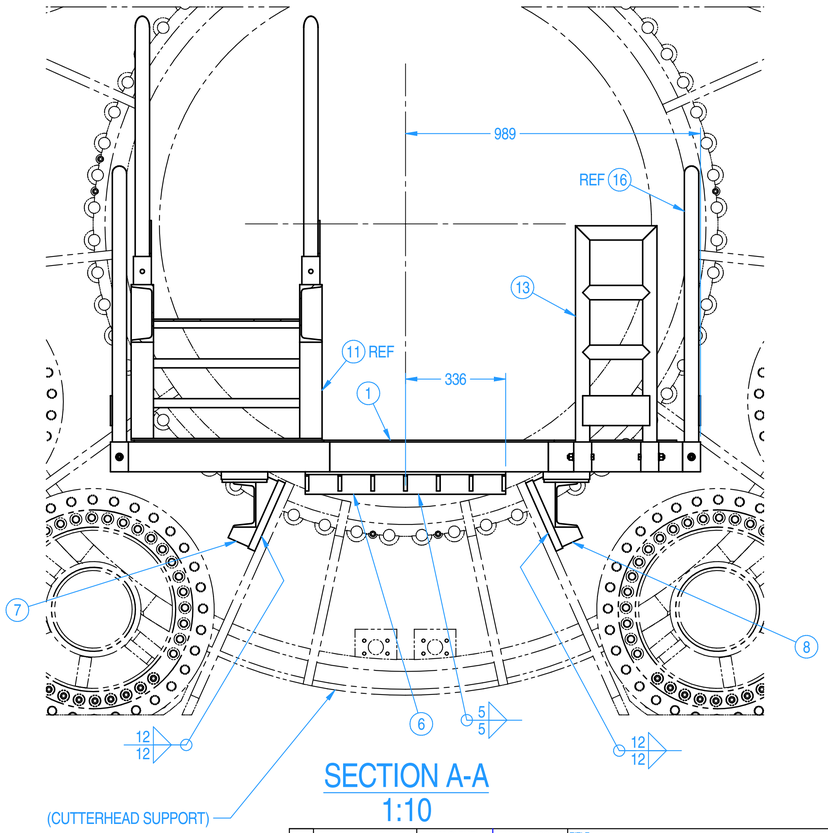

SECTION A-A
1:10

MACHINE	NEXT ASSY	TITLE	FWD SCAFFOLDING ASSEMBLY
EPB2110-365	1002640		
UNLESS NOTED ALL DIMS ARE mm		SIZE D	DWG No. 1002646
TOLERANCES UNLESS NOTED		REV 0	SHT 2 OF 3
0-300 ±1.5	X ±1.5	SCALE: SEE DETAIL DO NOT SCALE	
300-1500 ±3	X.XX ±.40	DRAWN C.ROHDE	CHECKED J.HEINEMAN
1500-6000 ±6	X.XXX ±.100	DATE 12/17/2011	DATE 12/19/2011
6000+ ±12	ANGLES ±1°	THIRD ANGLE PROJECTION	APPROVED J.HEINEMAN
FAB TWMS 3.2	SURFACE FINISH 3.2	WEIGHT TOTAL 960.5 kg	DATE 12/20/2011
DIMENSIONS (X) ARE REF			
ALL GEOMETRIC DIMENSIONING & TOLERANCING PER ANSI Y14.5M-1982 AS APPLICABLE.			

PROPRIETARY NOTICE
The information disclosed herein is the sole property of The Robbins Company, and remains their sole property. It shall not be duplicated in full or part, used for manufacture or otherwise disclosed to others without written consent of The Robbins Company. By accepting this information, recipient agrees to abide in total by the conditions of this notice and to use the information for this conditions. This material is on loan only, and is to be returned upon request to The Robbins Company.

REV	DESCRIPTION	BY	DATE

Robbins
www.TheRobbinsCompany.com

1002646

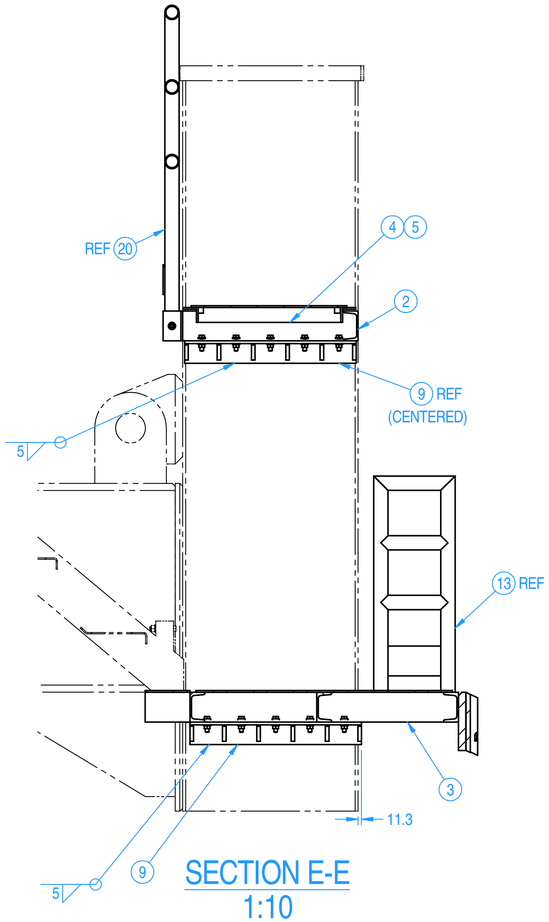

SECTION E-E
1:10

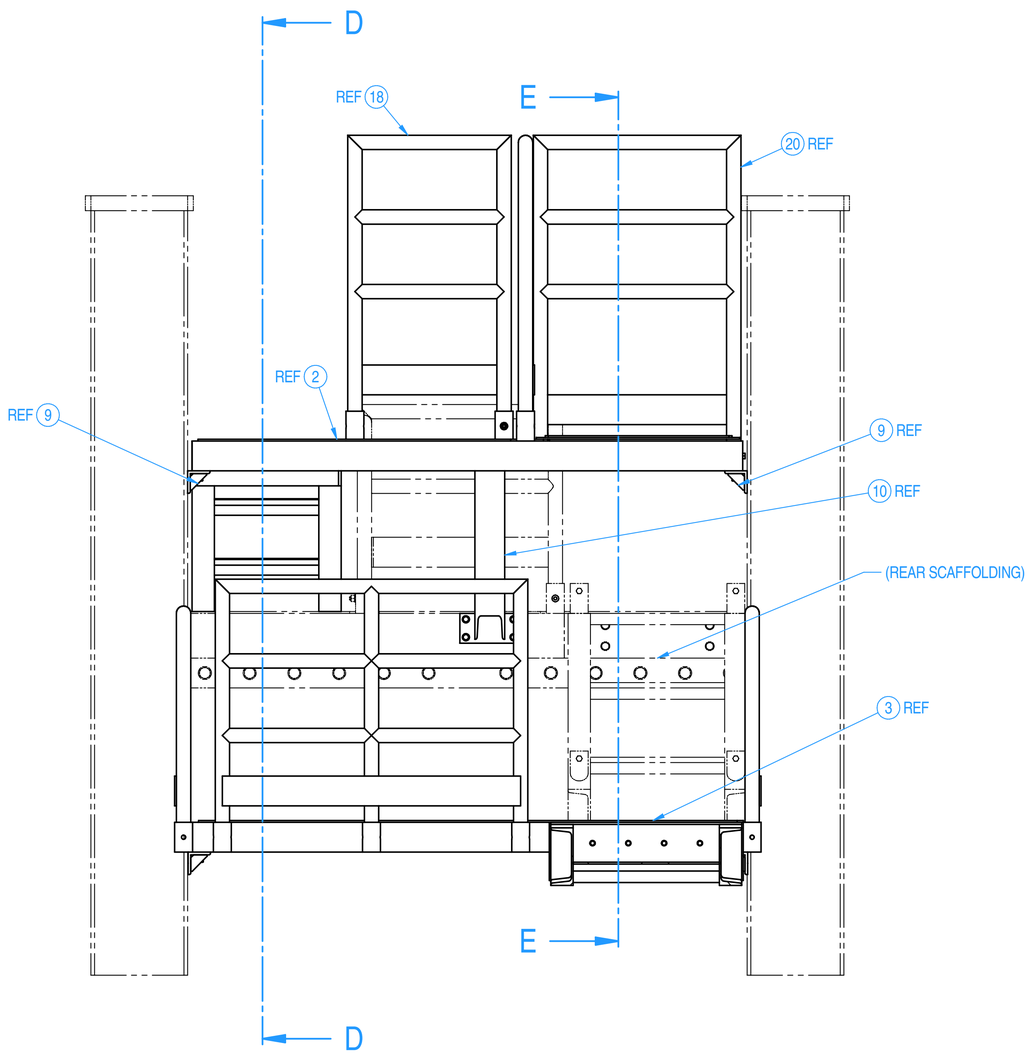

SECTION B-B
1:10
(LOOKING AFT)

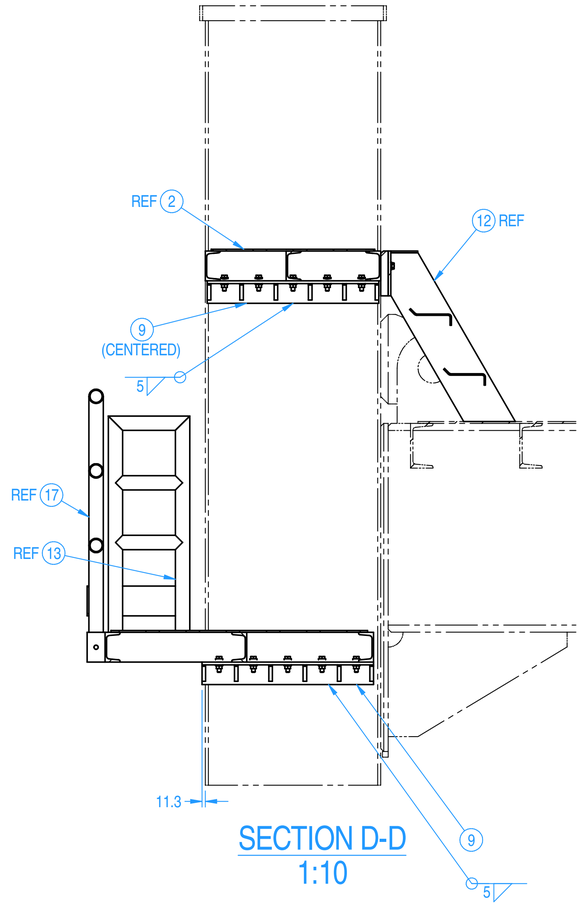

SECTION D-D
1:10

1002646

REV	DESCRIPTION	BY/ DATE

PROPRIETARY NOTICE
The information disclosed hereon, is the sole property of The Robbins Company, and remains their sole property. It shall not be duplicated in full or part, used by or disclosed to any other party without prior written consent of The Robbins Company. By accepting this information, recipient agrees to abide in total with this notice, without any modification whatsoever to the conditions. This material is on loan only, and is to be returned upon request to The Robbins Company.

MACHINE	NEXT ASSY
EPB2110-365	1002640

UNLESS NOTED ALL DIMS ARE mm

TOLERANCES UNLESS NOTED

FAB (mm)		MACHINING (mm)	
0-300	±1.5	X	±1.5
300-1500	±3	X.X	±1.0
1500-6000	±6	X.XX	±.40
6000+	±12	X.XXX	±.100
		ANGLES	±1°
		SURFACE FINISH	3.2

DIMENSIONS (X) ARE REF

ALL GEOMETRIC DIMENSIONING & TOLERANCING PER ANSI Y14.5M-1982 AS APPLICABLE.

TITLE
FWD SCAFFOLDING ASSEMBLY

SIZE	DWG No.	REV	SHT	SCALE:
D	1002646	0	3 OF 3	SEE DETAIL - DO NOT SCALE

Robbins

DRAWN	CHECKED
C.ROHDE	J.HEINEMAN
DATE 12/17/2011	DATE 12/19/2011
THIRD ANGLE PROJECTION	APPROVED J.HEINEMAN
WEIGHT TOTAL: 960.5 kg	DATE 12/20/2011

www.TheRobbinsCompany.com

NOTES:

1. REMOVE ALL BURRS & BREAK SHARP EDGES.
2. ALL WELDING SHALL MEET THE REQUIREMENTS OF THE LATEST EDITION OF THE AWS STRUCTURAL WELDING CODE (D1.1/D1.1M) - ALL SECTIONS AS APPLICABLE UNLESS OTHERWISE NOTED. USE E70XX LOW HYDROGEN ELECTRODES OR EQUIVALENT.
3. TORQUE ALL FASTENERS PER 5750 9900 17.

4 ADJUST PROXIMITY SWITCH TO TRIGGER WHEN ITEM #8 IS FULLY RETRACTED.

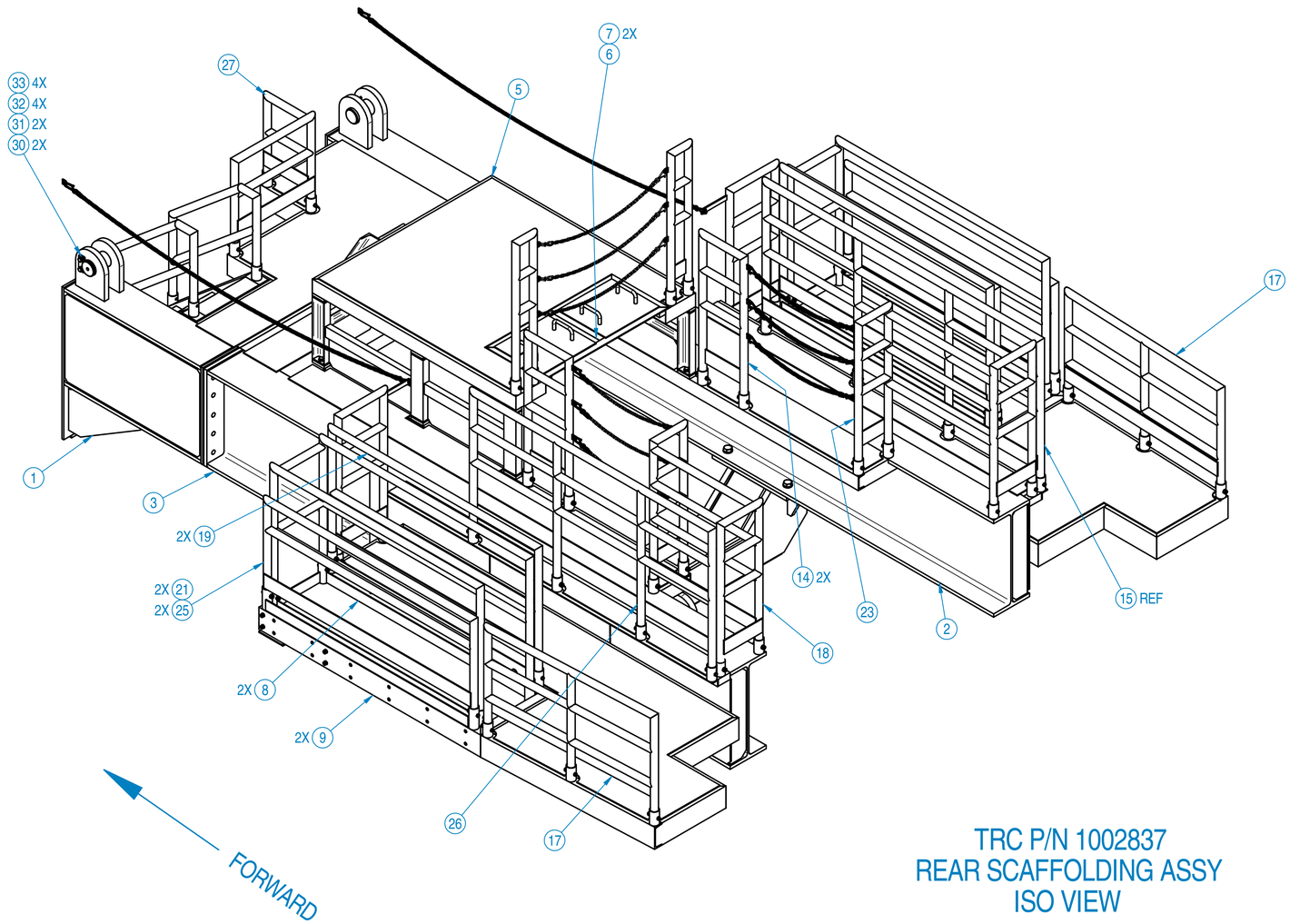

TRC P/N 1002837
REAR SCAFFOLDING ASSY
ISO VIEW
1:16

QTY	PART No.	DESCRIPTION	DWG No.	WT. Total	ITEM
1	1035034	REAR SCAFFOLD, FRONT BLOCK	1035034	1338.9 kg	1
1	1036528	REAR SCAFFOLD, RIGHT SIDE	1036528	1527.6 kg	2
1	1036527	REAR SCAFFOLD, LEFT SIDE	1036527	1533.7 kg	3
1	1029933	REAR SCAFFOLDING, DECK FRAME	1029933	147.6 kg	4
1	1029925	REAR SCAFFOLDING, TOP DECK	1029925	219.8 kg	5
1	1029929	REAR SCAFFOLD, REMOVABLE	1029929	15.7 kg	6
2	1029930	REAR SCAFFOLD, DECK COVER	1029930	19.7 kg	7
2	1001775	ADJ SCAFFOLDING	1001775	169.7 kg	8
2	1001684	ADJ SCAFFOLDING, MAIN FRAME	1001684	281.0 kg	9
1	1036526	TOWING FRAME	1036526	3994.3 kg	10
2 1	1047458	LOAD SENSOR PIN	1047458	10.6 kg	11
1	1030170	STEP	1030170	37.0 kg	12
1	1029960	STAIR A	1029960	62.0 kg	13
2	1030124	HANDRAIL	1030124	26.4 kg	14
1	1030121	HANDRAIL	1030121	52.1 kg	15
2	1030115	HANDRAIL	1030115	27.8 kg	16
2	1036539	HANDRAIL	1036539	59.1 kg	17
1	1030132	HANDRAIL	1030132	38.6 kg	18
2	1001763	HANDRAIL	1001763	57.3 kg	19
2	1030144	HANDRAIL	1030144	20.0 kg	20
2	1001764	HANDRAIL	1001764	87.9 kg	21
2	1030083	HANDRAIL	1030083	22.5 kg	22
1	1030125	HANDRAIL	1030125	38.6 kg	23
1	1033288	HANDRAIL	1033288	19.4 kg	24
2	1030805	HANDRAIL	1030805	53.5 kg	25
1	1036540	HANDRAIL	1036540	47.3 kg	26
9	1030204	SAFETY CHAIN, 1 METER	1030204	105.3 kg	27
16	A22158-8	WASHER, HD NW OD M30	A22158	1.1 kg	28
1 8	A22151-80908	HHCS, M30x90mm C10.9	A22151	6.1 kg	29
2	1030788	KEYBAR	1030788	0.7 kg	30
2	1030787	PIN, TOWING	1030787	23.0 kg	31
2 6	A22152-50405	HHCS, M16x40mm C8.8	A22152	0.6 kg	32
2 6	A22158-5	WASHER, HD NW OD M16	A22158	0.1 kg	33
8	A22154-88	NUT, M30 C10	A22154	2.0 kg	34
2	A60317-4	ADJUSTABLE SLIDE BRACKET	A60317	0.2 kg	35
2	A60317-7	PROX SWITCH N/O&N/C-4 W DC-PNP	A60317	2.6 kg	36
8	0160604200	PHMS, M4x16mm		0.0 kg	37
4	A67526-00108	SFHS, M4x10mm C10.9	A67526	0.0 kg	38
2 2	1047557	MOUNTING TAB, CHAIN	1030144	0.1 kg	39
2 2	1047596	MOUNTING PLATE, CHAIN	1047596	0.7 kg	40
2 2	1036589	SAFETY CHAIN, 3 METER	1030204	26.3 kg	41
2 1	D65175-090	KEYBAR, METRIC 90mm	D65175	0.4 kg	42

REV	DESCRIPTION	APPD BY DATE
2	REVISED SHT 3, REVISED BOM- INCREASED QTY FOR -32, -33 ADDED -39 THRU 42, CHANGED -11 PART NO.	JDS 5/18/12 JH 5/21/12
1	REVISED ITEM 29 IN BOM	RF 4/2/12

PROPRIETARY NOTICE
The information disclosed hereon, is the sole property of Robbins Company. By accepting this information, recipient agrees that he duplicates it in full or part, uses it, or discloses it to any person or entity without the express written consent of Robbins Company. By accepting this information, recipient agrees to return it to Robbins Company upon demand. This material is not whatsoever to this conditions. This material is on loan only.

MACHINE	NEXT ASSY
EPB2016-376/377	1002830
/341	

UNLESS NOTED ALL DIMS ARE mm
TOLERANCES UNLESS NOTED
10-300 ±1.5 | 300-1500 ±3 | 1500-6000 ±6 | 6000+ ±12
X ±1.5 | X.X ±1.0 | X.XX ±.40 | X.XXX ±.100 | ANGLES ±1° | SURFACE FINISH √
THIRD ANGLE PROJECTION
DIMENSIONS (X) ARE REF
ALL GEOMETRIC DIMENSIONING & TOLERANCING PER ANSI Y14.5-2009

TITLE: REAR SCAFFOLDING ASSY

SIZE	DWG No.	REV	SHT	SCALE
D	1002837	2	1 OF 4	SEE DETAIL

DO NOT SCALE

DRAWN BY	CHECKED STANDARDS
R.FINE	J.SPRAGUE
DATE 3/8/2012	CHECKED DESIGN J.HEINEMAN
WEIGHT TOTAL 10077.2 kg	APPROVED BY J.HEINEMAN DATE 3/8/2012

Robbins
www.TheRobbinsCompany.com

1002837

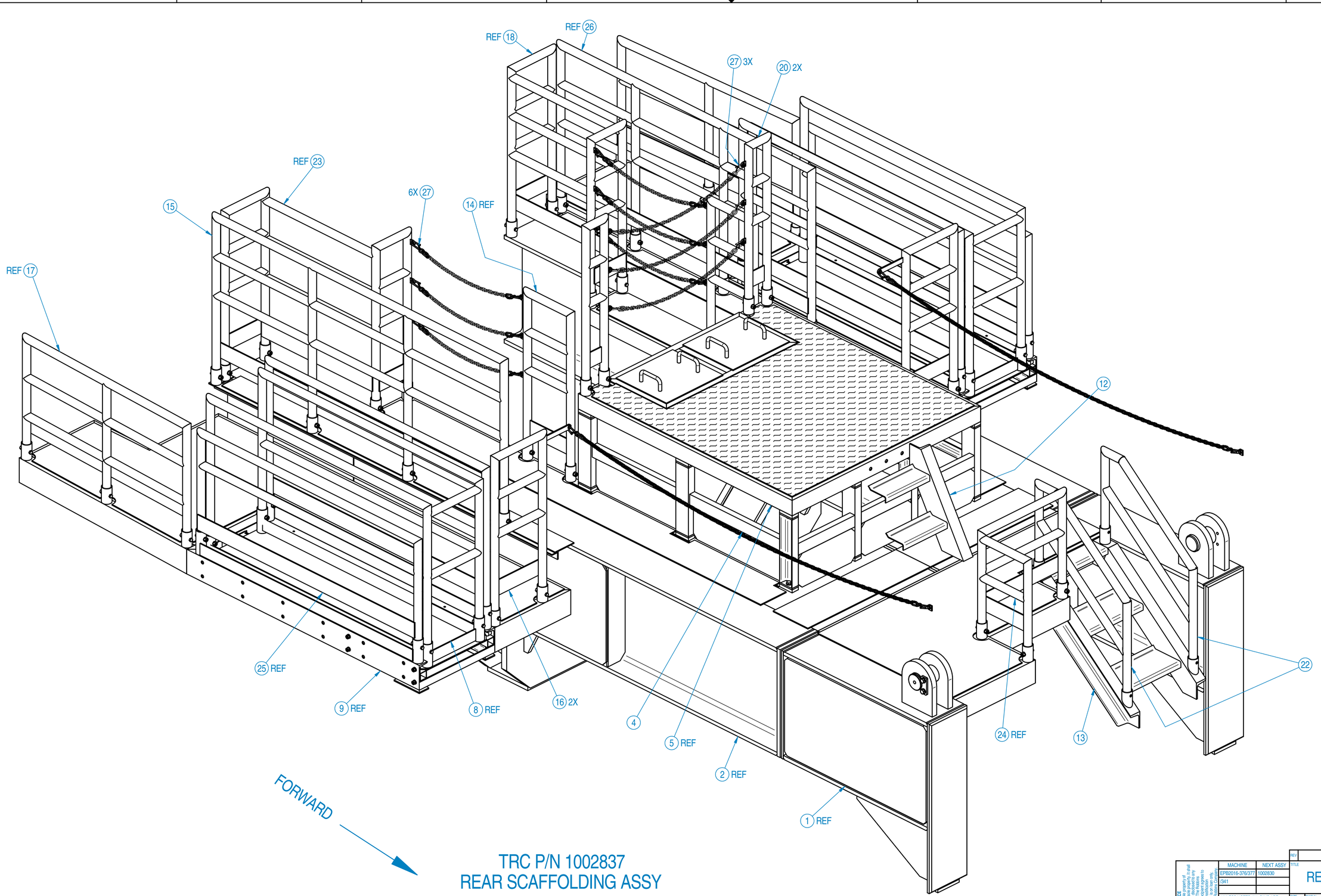

TRC P/N 1002837
REAR SCAFFOLDING ASSY
1:10

MACHINE	NEXT ASSY
EPB2016-376/377	1002830
/341	

UNLESS NOTED ALL DIMS ARE mm

TOLERANCES UNLESS NOTED

0-300	±1.5	X	±1.5
300-1500	±3	X.X	±1.0
1500-6000	±6	X.XX	±.40
6000+	±12	X.XXX	±.100
		ANGLES	±1°
		SURFACE FINISH	3.2

THIRD ANGLE PROJECTION

DIMENSIONS (X) ARE REF

ALL GEOMETRIC DIMENSIONING & TOLERANCING PER ANSI Y14.5-2009

REV	DESCRIPTION	REV'D BY DATE	APP'D BY DATE

TITLE: REAR SCAFFOLDING ASSY

SIZE: D | DWG No. 1002837 | REV 2 | SHT 2 OF 4 | SCALE SEE DETAIL

DO NOT SCALE

DRAWN BY: R.FINE | DATE: 3/8/2012 | CHECKED STANDARDS: J.SPRAGUE | CHECKED DESIGN: J.HEINEMAN

WEIGHT TOTAL: 10077.2 kg | APPROVED BY: J.HEINEMAN | DATE: 3/8/2012

Robbins

www.TheRobbinsCompany.com

PROPRIETARY NOTICE

The information disclosed herein, is the sole property of The Robbins Company, and remains the sole property. It shall not be duplicated in full or part, used by, or disclosed to any other party without prior written consent of The Robbins Company. By accepting this information, recipient agrees to abide by the terms and conditions, without any implication whatsoever to the contrary. This material is not loan only, and is to be returned upon request to The Robbins Company.

1002837

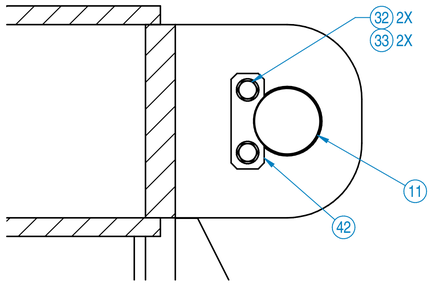

SECTION E-E
1:4

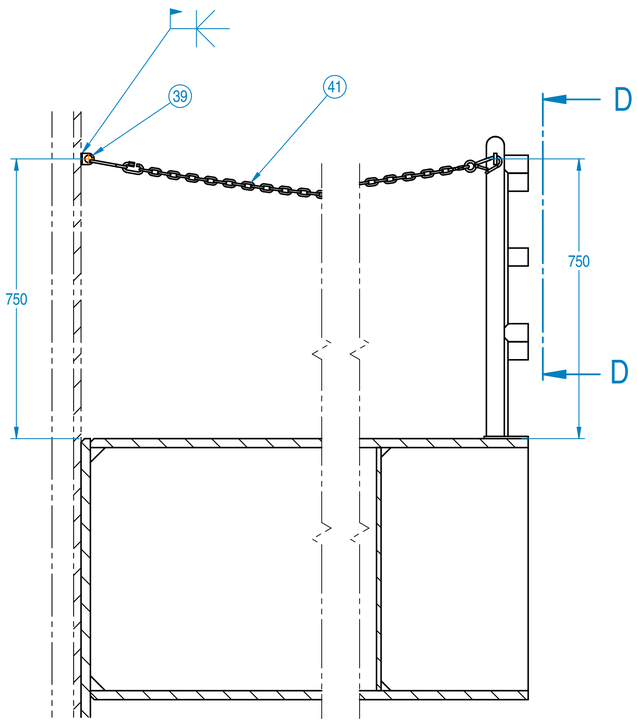

SECTION C-C
1:8
TYP 2 PLACES

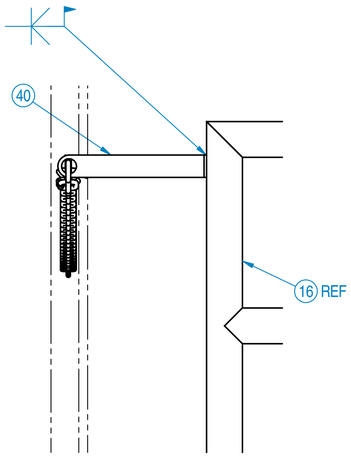

SECTION D-D
1:4
TYP 2 PLACES

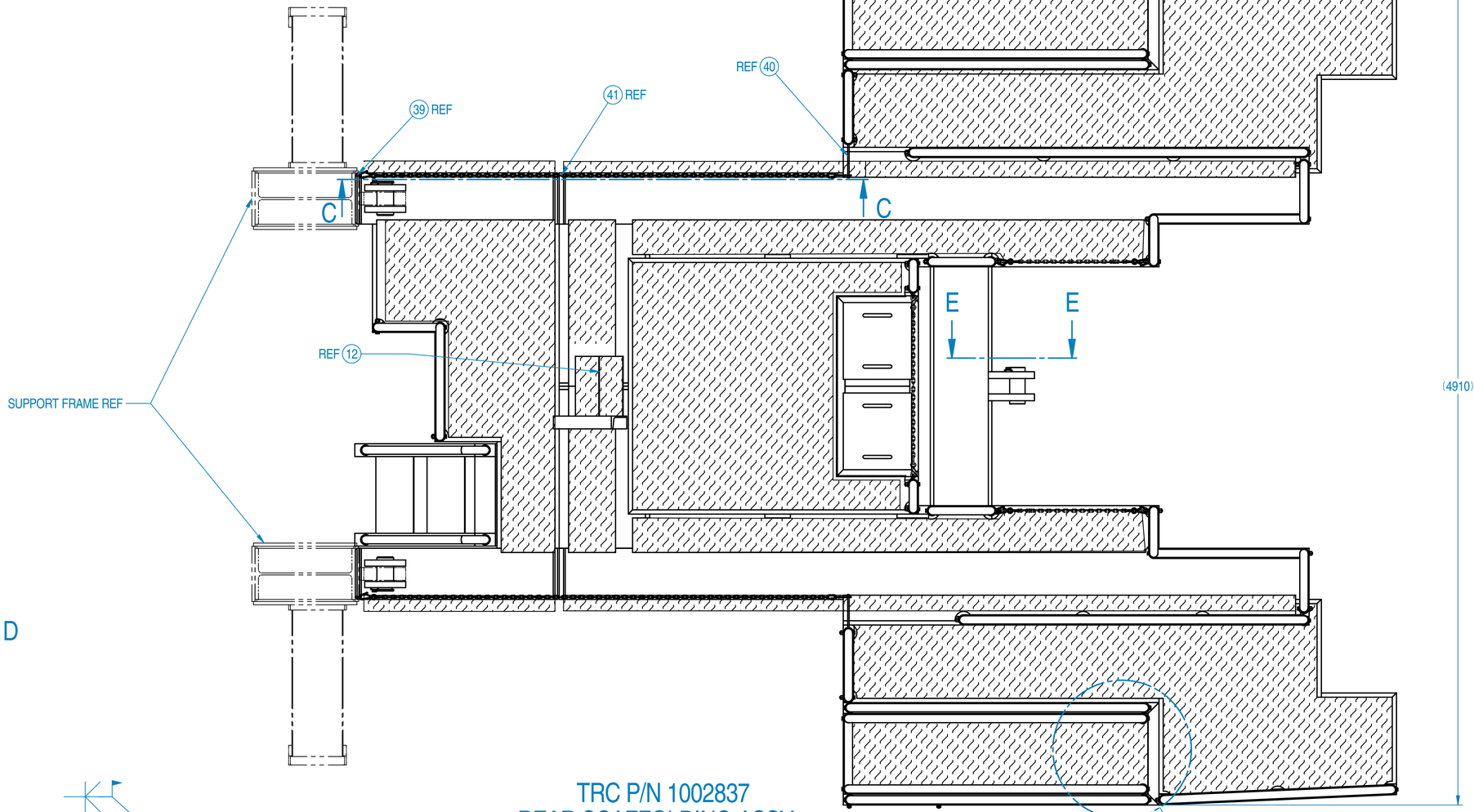

TRC P/N 1002837
REAR SCAFFOLDING ASSY
TOP
1:14.29

SEE SHEET 4

REV	DESCRIPTION	REV'D BY / DATE	APP'D BY / DATE
2	ADDED ITEMS 39 THRU 42 TO DWG ADDED SECTS C-C,D-D, E-E	JDS 5/17/12	JH 5/21/12

TITLE: REAR SCAFFOLDING ASSY

MACHINE	NEXT ASSY
EPB2016-376/377	1002830
/341	

UNLESS NOTED ALL DIMS ARE mm

TOLERANCES UNLESS NOTED	
0-300 ±1	X ±1.0
300-1500 ±3	X.X ±.10
1500-6000 ±6	X.XX ±.40
6000+ ±12	X.XXX ±.100
THIRD ANGLE PROJECTION	ANGLES ±1°
DIMENSIONS (X) ARE REF	SURFACE FINISH
ALL GEOMETRIC DIMENSIONING & TOLERANCING PER ANSI Y14.5-2009	

SIZE: D | DWG No.: 1002837 | REV: 2 | SHT 3 OF 4 | SCALE: SEE DETAIL / DO NOT SCALE

DRAWN BY: R.FINE | DATE: 3/8/2012
CHECKED STANDARDS: J.SPRAGUE
CHECKED DESIGN: J.HEINEMAN
WEIGHT TOTAL: 10077.2 kg
APPROVED BY: J.HEINEMAN | DATE: 3/8/2012

Robbins

www.TheRobbinsCompany.com

PROPRIETARY NOTICE
The information disclosed herein, is the sole property of The Robbins Company. Any reproduction in part or whole, or any transmission of this drawing without the written permission of The Robbins Company is prohibited. By accepting this information, recipient agrees to not duplicate in full or part, used by, or disclosed to any person for any purpose detrimental to the interests of The Robbins Company and agrees that this information shall not be used in whole or part for the benefit of any other person or entity without the written consent of The Robbins Company. By accepting this information, recipient agrees to abide by the conditions. This material is on loan only, and shall be returned upon request. This material is not to be sold.

1002837

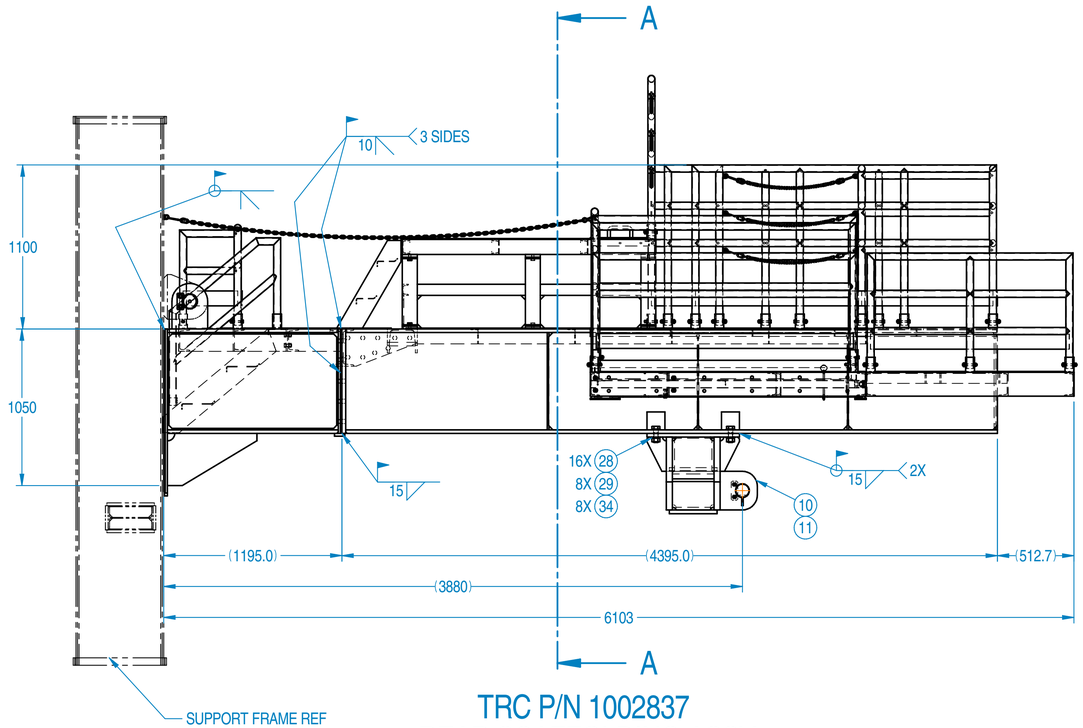

TRC P/N 1002837
REAR SCAFFOLDING ASSY
SIDE
1:20

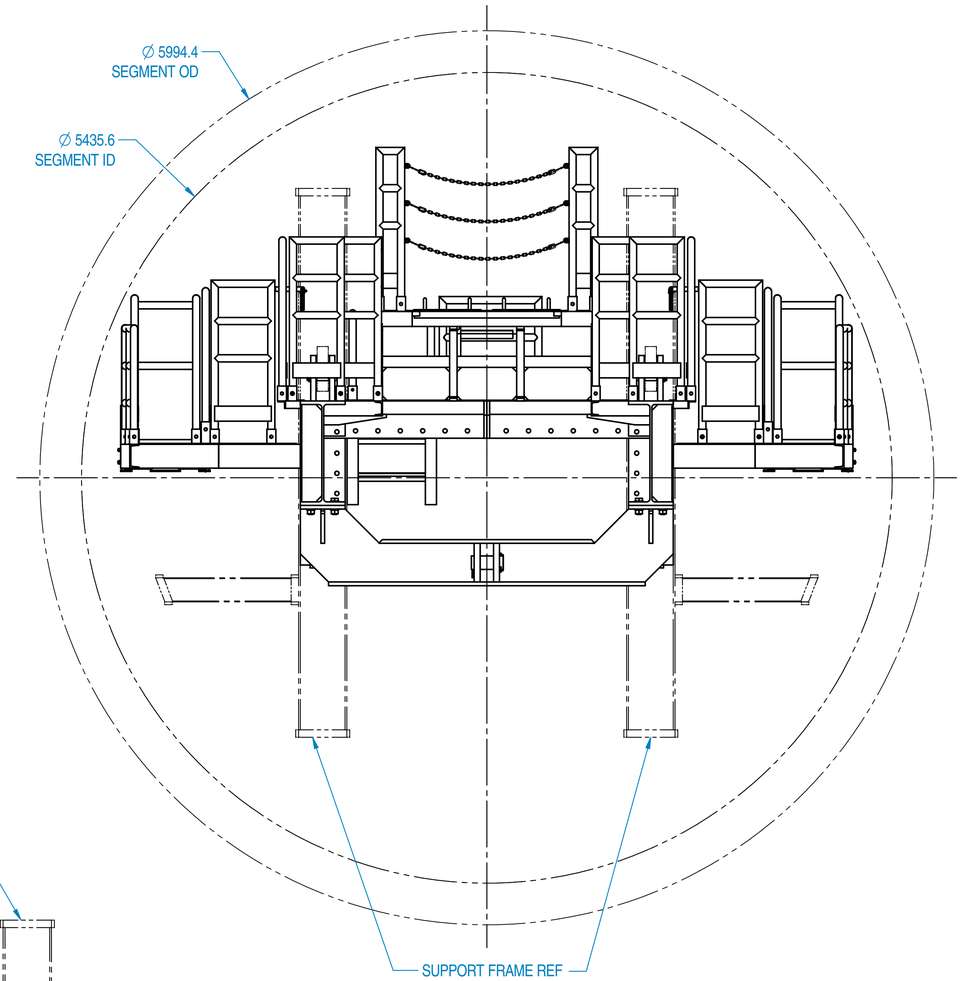

TRC P/N 1002837
REAR SCAFFOLDING ASSY
LOOKING FWD
1:20

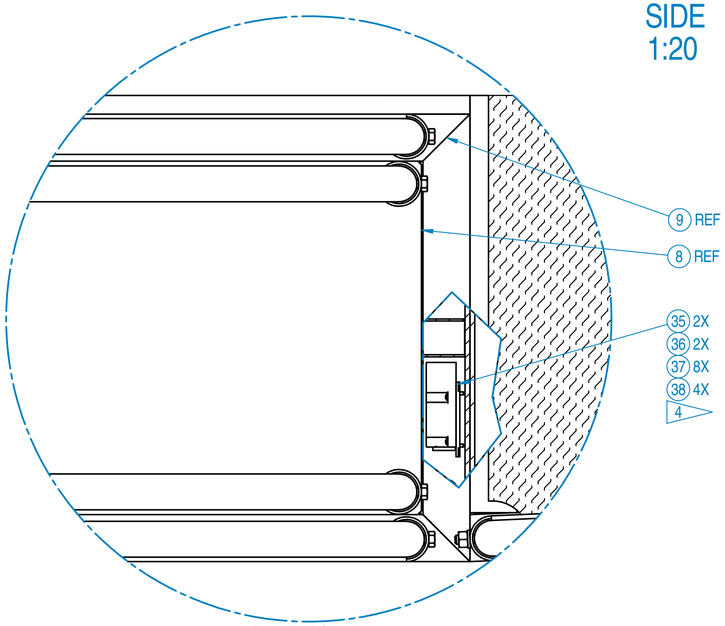

DETAIL B
1:4
TYP INSTALL OF
ITEMS #37 - #40
(2 PLACES)
FROM SHT 3

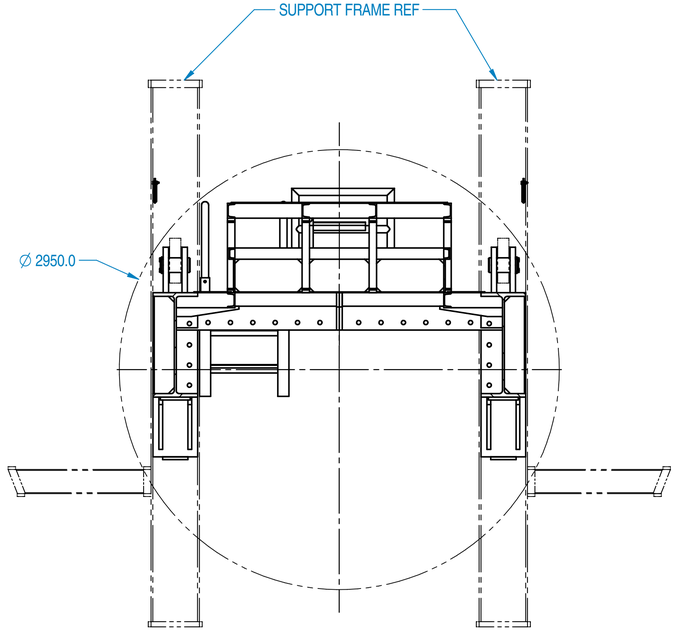

ERECTOR CLEARANCE
SECTION A-A
1:20

PROPRIETARY NOTICE
This information disclosed herein, is the sole property of The Robbins Company and may not be reproduced in whole or in part, used by or disclosed to any person without the prior written permission of The Robbins Company. By accepting this information, recipient agrees to use it only for the purpose intended by The Robbins Company and in accordance to the conditions. This material is on loan only, and shall be returned to The Robbins Company upon request.

MACHINE	NEXT ASSY
EPB2016-376/377	1002830
/341	

UNLESS NOTED ALL DIMS ARE mm

TOLERANCES UNLESS NOTED

0-300	±1.5	X	±1.5
300-1500	±3	X.X	±1.0
1500-6000	±6	X.XX	±.40
6000+	±12	X.XXX	±.100
		ANGLES	±1°
		SURFACE FINISH	125

THIRD ANGLE PROJECTION

DIMENSIONS (X) ARE REF.

ALL GEOMETRIC DIMENSIONING & TOLERANCING PER ANSI Y14.5-2009

REV	DESCRIPTION	REV'D BY/ DATE	APP'D BY/ DATE

TITLE: REAR SCAFFOLDING ASSY

SIZE	DWG No.	REV	SHT	OF	SCALE
D	1002837	2	4	4	SEE DETAIL

DO NOT SCALE

DRAWN BY: R.PINE
DATE: 3/8/2012
CHECKED STANDARDS: J.SPRAGUE
CHECKED DESIGN: J.HEINEMAN
WEIGHT TOTAL: 10077.2 kg
APPROVED BY: J.HEINEMAN
DATE: 3/8/2012

Robbins
www.TheRobbinsCompany.com

1002837

MODEL EPB2016-376/377
SECTION 21 • Backup Assembly

1. Backup assembly layout drawing
2. Backup gantry assembly drawings
3. Backup gantry structure drawing
4. Wheelbox assembly
5. Ventilation assembly
6. Ventilation fan specification drawing
7. Duct extender layout
8. Belt conveyor assembly
9. Segment unloader layout
10. Segment feeder assembly
11. Segment hoist specification drawing

PLAN VIEW
BACK-UP CONVEYOR

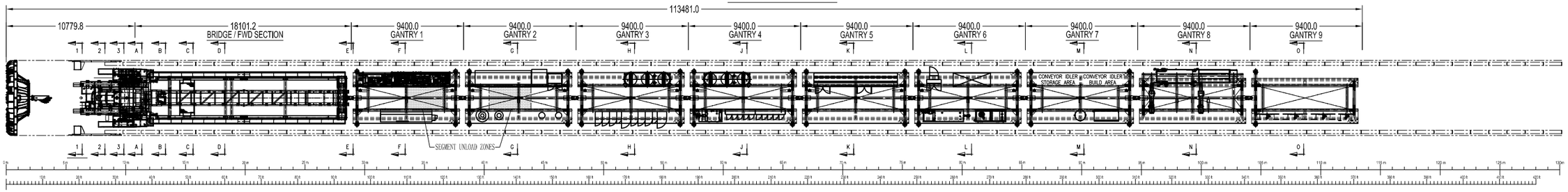

PLAN VIEW

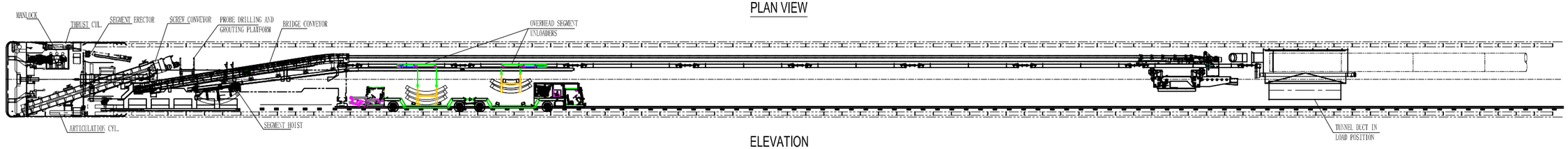

ELEVATION

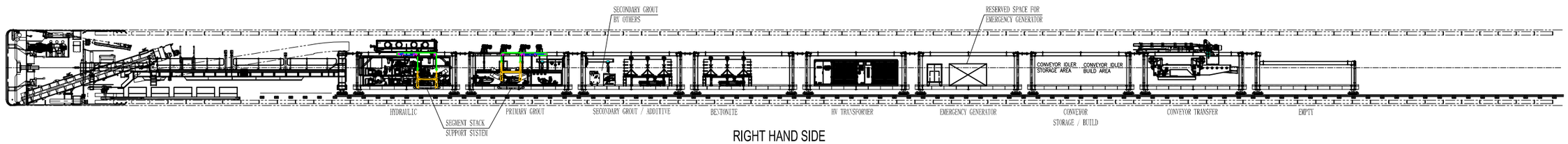

RIGHT HAND SIDE

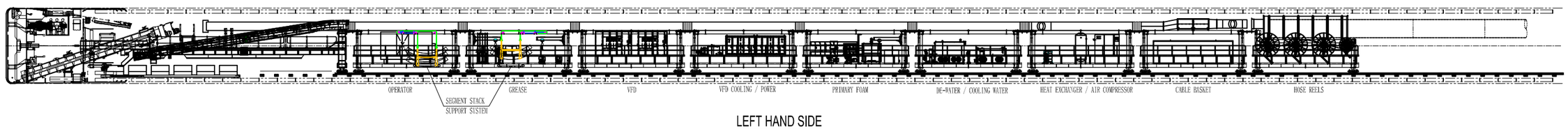

LEFT HAND SIDE

PROPRIETARY NOTICE
This information, drawing or design is the property of The Robbins Company, and remains their sole property. It shall not be used, copied, or reproduced in whole or in part for any other party without prior written consent of The Robbins Company. Any such unauthorized use is prohibited. Any ideas in hand with this notice, without any modification, are to be returned upon request to The Robbins Company.

MACHINE	NEXT ASSY
EPB2016-376	1046600

UNLESS NOTED ALL DIMS ARE mm
TOLERANCES UNLESS NOTED

FRACTIONS	DECIMALS (mm)	ANGLES
0-300 ± 1/5	X ± 1.0	± 1°
300-1500 ± 3	X.X ± 1.0	SURFACE
1500-6000 ± 6	X.XX ± .40	FINISH
6000+ ± 12	X.XXX ± .100	

THIRD ANGLE PROJECTION

DIMENSIONS IN ARE REFERENCE
ALL GEOMETRIC DIMENSIONING & TOLERANCING PER ANSI Y14.5-2009

REV	DESCRIPTION	REVD BY / DATE	APPD BY / DATE

TITLE: S.F. THIRD STREET TUNNEL BACKUP ASSEMBLY (RH)

SIZE	DWG NO.	REV	SHT	SCALE
D	1046701	0	1 of 1	1:170

DO NOT SCALE

DRAWN BY	CHECKED STANDARDS
D. WILSON	
DATE: 3-15-12	CHECKED DESIGN
WEIGHT TOTAL	APPROVED BY
	DATE

Robbins

www.TheRobbinsCompany.com

1046701

QTY. -1	PART No.	DESCRIPTION	WT. EA. kg	MATERIAL	ITEM
4	C370042	GANTRY STABILIZER ASSEMBLY	170		1
3	C370109	TOWING PIN ASSEMBLY	9.		2
1	1046360	GANTRY LINK	77.		3
1	B370127	SUPPORT FOR OPERATORS CAB	360.8		4
1	D123012	RESERVOIR SUPPORT	443		5
1	2006668	HYDRAULIC POWER UNIT ASSEMBLY	6122.6		6
1	2006772	HYDRAULIC RESERVOIR	1323		7
1	1046796	GANTRY STEELWORK ASSEMBLY	8719.2		8
1	1048275	WALKWAY, GANTRY	554.		9
REF	1036169	OPERATORS CAB ASSEMBLY	2035.		10
REF	1046722	SEGMENT HOIST	1000		11
REF	1050479	SEGMENT UNLOADER INSTALLATION	2025.8		12

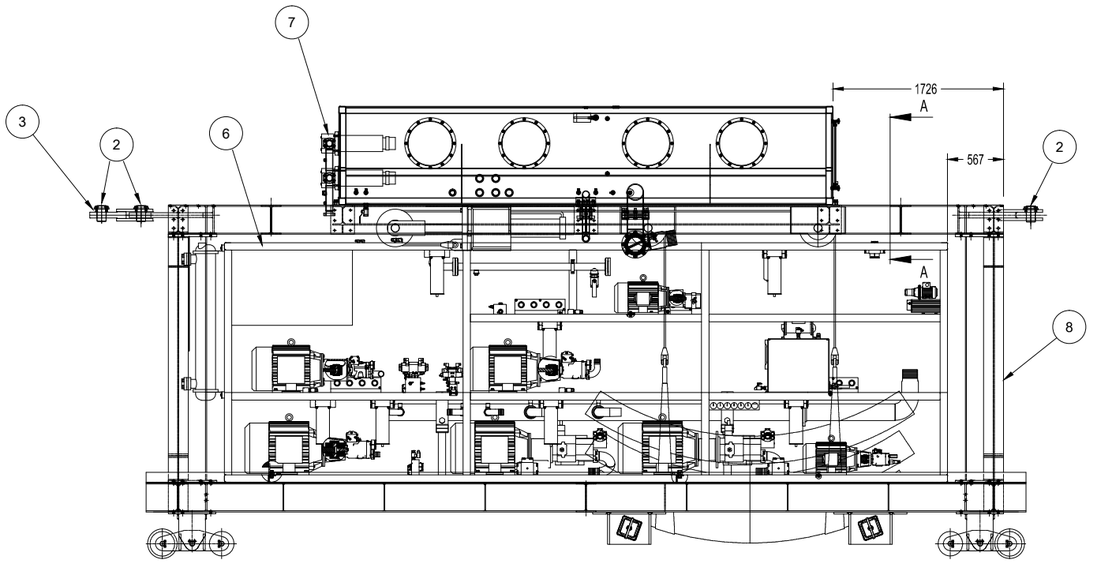

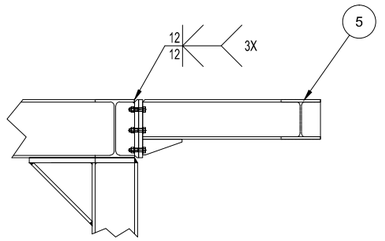

SECTION A-A
SCALE 1:15

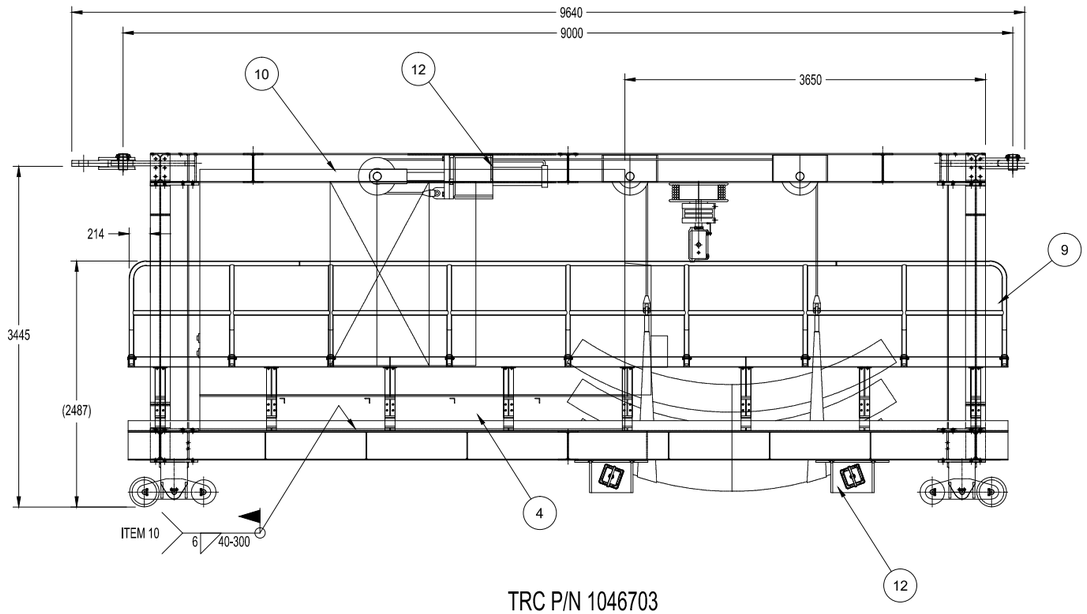

TRC P/N 1046703
GANTRY 1 ASSEMBLY RH

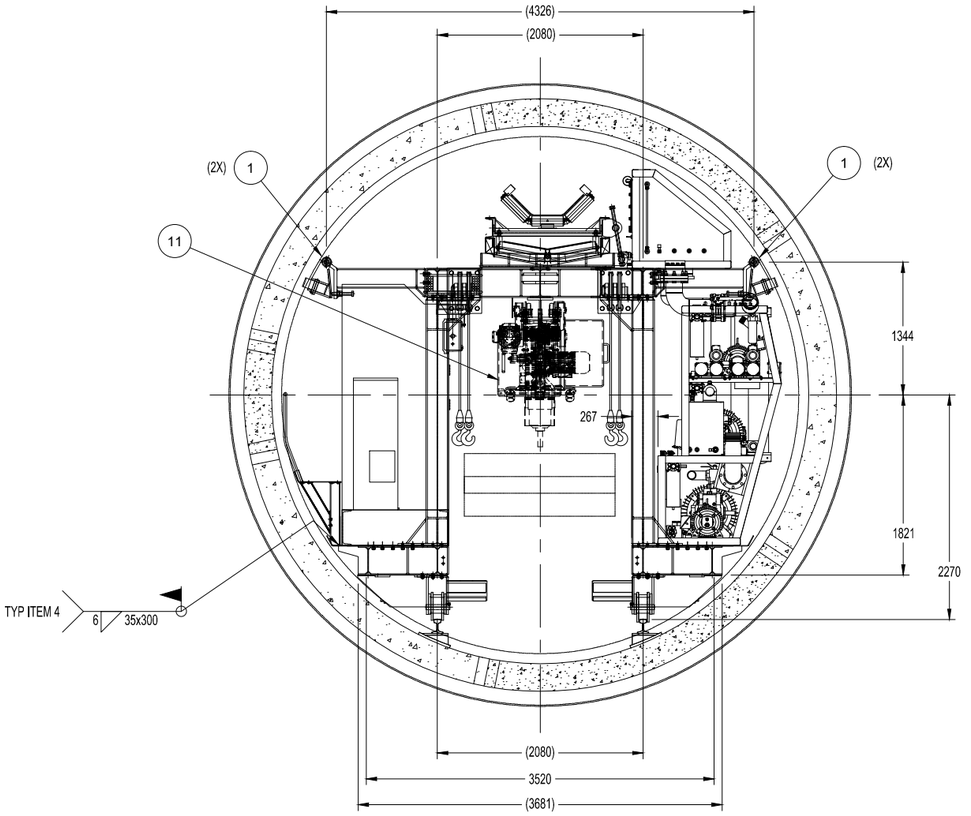

NOTES:

1. REMOVE ALL BURRS AND BREAK SHARP EDGES.
2. ALL WELDING SHALL MEET THE REQUIREMENTS OF THE LATEST EDITION OF THE AWS STRUCTURAL WELDING CODE - ALL SECTIONS AS APPLICABLE UNLESS OTHERWISE NOTED. USE E70XX LOW HYDROGEN ELECTRODES OR EQUIVALENT.
3. TORQUE FASTENERS PER ROBBINS DRAWING 5750 9900 17.

PROPRIETARY NOTICE
The information disclosed hereon is the sole property of The Robbins Company, and remains the sole property, in whole or in part, of the Robbins Company. It shall not be disclosed to any other party without prior written consent of The Robbins Company. By accepting this information, the Robbins Company is not to be reproduced, copied, or used in any manner to other than the purpose of the Robbins Company. This material is not to be returned upon request to The Robbins Company.

MACHINE	NEXT ASSY
EPB2016-376	1046701

UNLESS NOTED ALL DIMS ARE mm
TOLERANCES UNLESS NOTED
FAB (mm): 0-300 ± 1.5; 300-1500 ± 3; 1500-6000 ± 6; 6000+ ± 12
MACHINING (mm): X ± 1.5; X.X ± 1.0; X.XX ± .40; X.XXX ± .100; ANGLES ± 1; SURFACE 63
THIRD ANGLE PROJECTION
DIMENSIONS (X) ARE REFERENCE
ALL GEOMETRIC DIMENSIONING & TOLERANCING PER ANSI Y14.5-2009

REV	DESCRIPTION	REV'D BY/ DATE	APP'D BY/ DATE

TITLE: GANTRY 1 ASSEMBLY RH

SIZE	DWG No.	REV	SHT	SCALE
D	1046703	0	1 OF 1	1:1 DO NOT SCALE

DRAWN BY: D. KING
DATE: 9/2/2012
CHECKED STANDARDS: D. WILSON
CHECKED DESIGN: D. WILSON
APPROVED BY: J. HIENEMAN
DATE: 8/30/2012
WEIGHT TOTAL: 32078

Robbins

www.TheRobbinsCompany.com

1046703

QTY. -1	PART No.	DESCRIPTION	WT. EA. kg	MATERIAL	ITEM
4	C370042	GANTRY STABILIZER ASSEMBLY	184.2		1
2	C370109	TOWING PIN ASSEMBLY	9.		2
1	1046360	GANTRY LINK	77.		3
1	1052604	DAVIT HOIST 1 TON	150.		4
2	D118826-1	DAVIT HOIST 1 TON	150.		5
1	1052812	PUMP RACK SUPPORT	123		6
1	1046796	GANTRY STEELWORK ASSEMBLY	8719.2		7
1	1048275	WALKWAY, GANTRY	654.		8
1	A119473-1	GREASE PUMP ASSEMBLY	88		9
1	2000243	GREASE PUMP ASSEMBLY	88		10
2	A109825-1	GREASE PUMP ASSEMBLY	10		11
REF	1046810	GROUT SYSTEM ASSEMBLY	5038		12
REF	1046722	SEGMENT HOIST	1000		13
REF	1051672	SEGMENT UNLOADER	2025		14

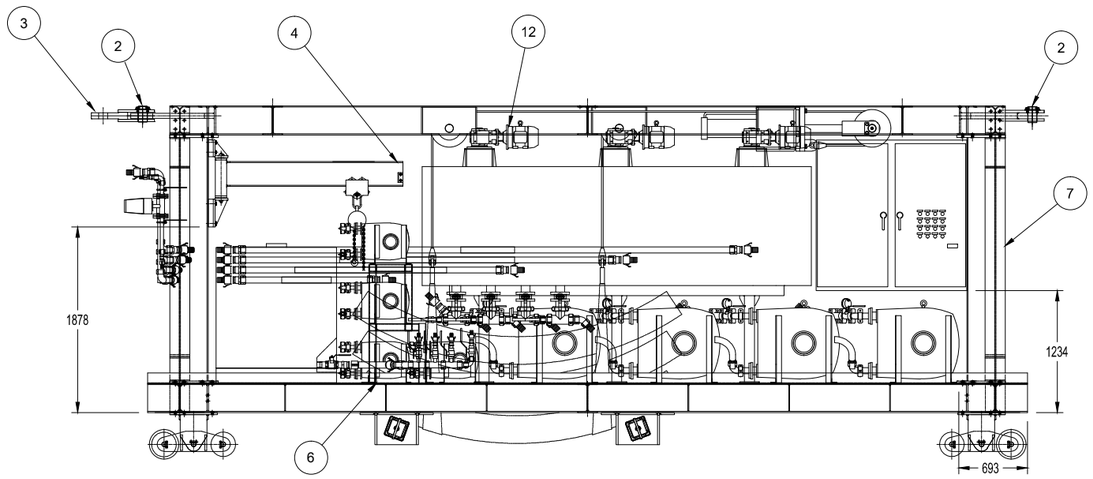

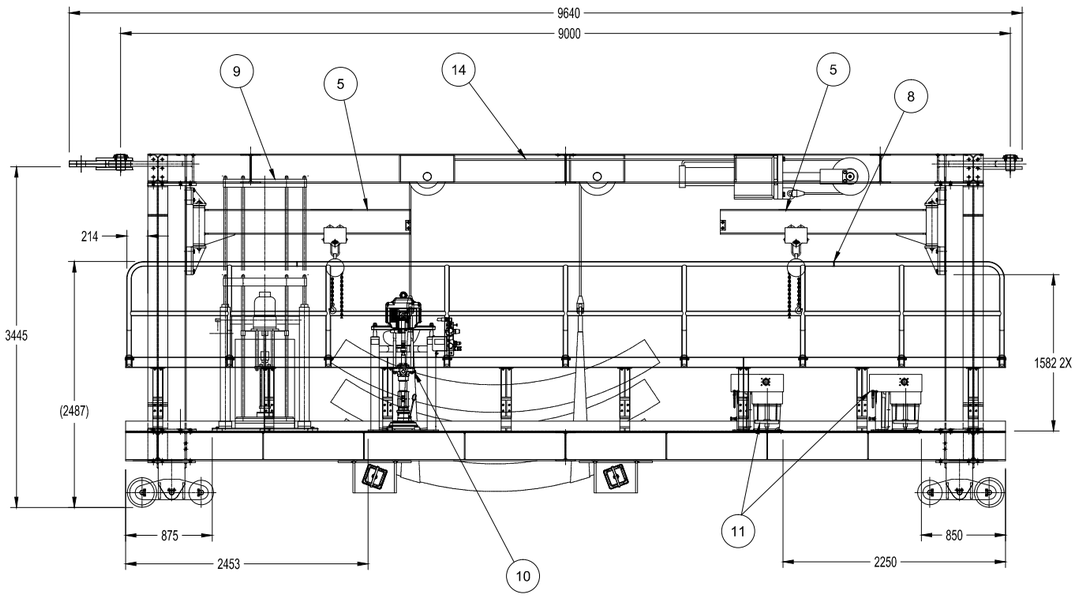

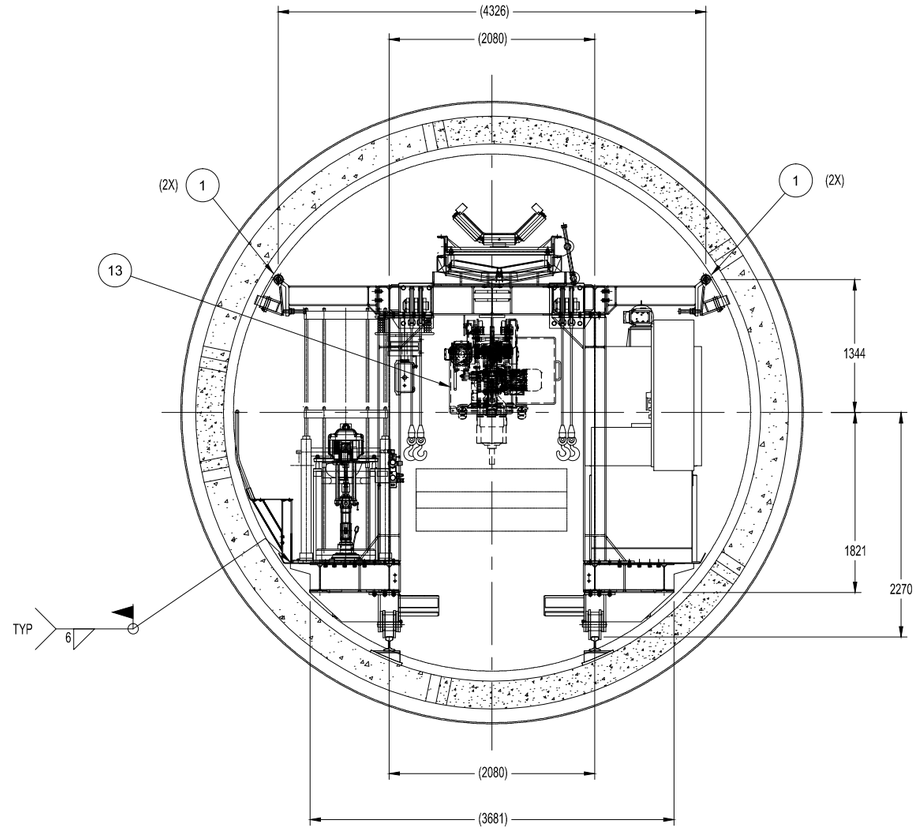

TRC P/N 1046704
GANTRY 2 ASSEMBLY RH

NOTES:

1. REMOVE ALL BURRS AND BREAK SHARP EDGES.
2. ALL WELDING SHALL MEET THE REQUIREMENTS OF THE LATEST EDITION OF THE AWS STRUCTURAL WELDING CODE - ALL SECTIONS AS APPLICABLE UNLESS OTHERWISE NOTED. USE E70XX LOW HYDROGEN ELECTRODES OR EQUIVALENT.
3. TORQUE FASTENERS PER ROBBINS DRAWING 5750 9900 17.

PROPRIETARY NOTICE
The information disclosed herein is the property of The Robbins Company, and remains their sole property. It will not be copied or used in whole or part, nor will it be disclosed to any other party without prior written consent of The Robbins Company. Any such copies made must contain the same proprietary notice as is borne by this notice, without any modification. Visual contact shall be construed to mean that no rights, as set forth in the uniform code adopted by The Robbins Company, are to be released upon request to The Robbins Company.

MACHINE	NEXT ASSY
EPB2016-376	1046701

UNLESS NOTED ALL DIMS ARE mm
TOLERANCES UNLESS NOTED

FRACTIONS (inch)	MACHINING (mm)		
0-300 ± 1.5	X ± 1.5		
300-1500 ± 3	X.X ± 1.0		
1500-6000 ± 6	X.XX ± .40		
6000+ ± 12	X.XXX ± .100		
THIRD ANGLE PROJECTION	ANGLES ± 1°		
DIMENSIONS (X) ARE REFERENCE	SURFACE FINISH		
ALL GEOMETRIC DIMENSIONING & TOLERANCING PER ANSI Y14.5-2009			

REV	DESCRIPTION	REV'D BY / DATE	APP'D BY / DATE

TITLE
GANTRY 2 ASSEMBLY RH

SIZE	DWG No.	REV	SHT	SCALE
D	1046704	0	1 OF 1	1:1

DO NOT SCALE

DRAWN BY / DATE	CHECKED STANDARDS
D. KING 9/2/2012	D. WILSON
CHECKED DESIGN	D. WILSON
WEIGHT TOTAL	APPROVED BY / DATE
19691	J. HENEMAN 8/30/2012

Robbins
www.TheRobbinsCompany.com

1046713

QTY. -1	PART No.	DESCRIPTION	WT. EA. kg	MATERIAL	ITEM
4	C370042	GANTRY STABILIZER ASSEMBLY	170.0		1
2	C370109	TOWING PIN ASSEMBLY	9.		2
1	1046360	GANTRY LINK	77.		3
1	D118826-1	DAVIT HOIST 1 TON	277.4		4
1	1052246	EQUIP. SUPPORT INSTALLATION	799.3		5
REF	D122837	BENTONITE TANK ASSEMBLY	1672.8		6
REF	D123245	VFD CABINET ASSEMBLY	4000		7
1	1046796	GANTRY STEELWORK ASSEMBLY	8719.2		8
1	1048275	WALKWAY, GANTRY	654.		9

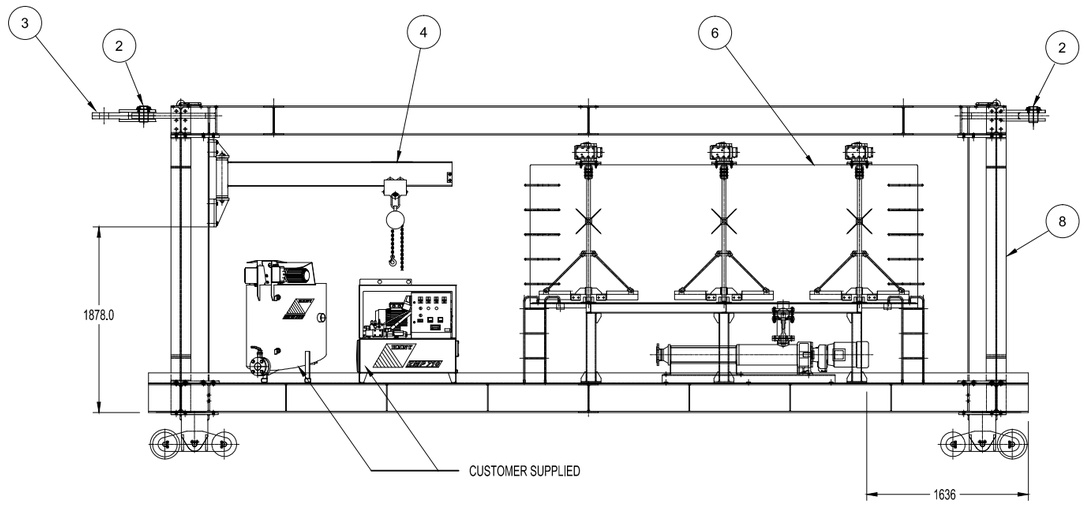

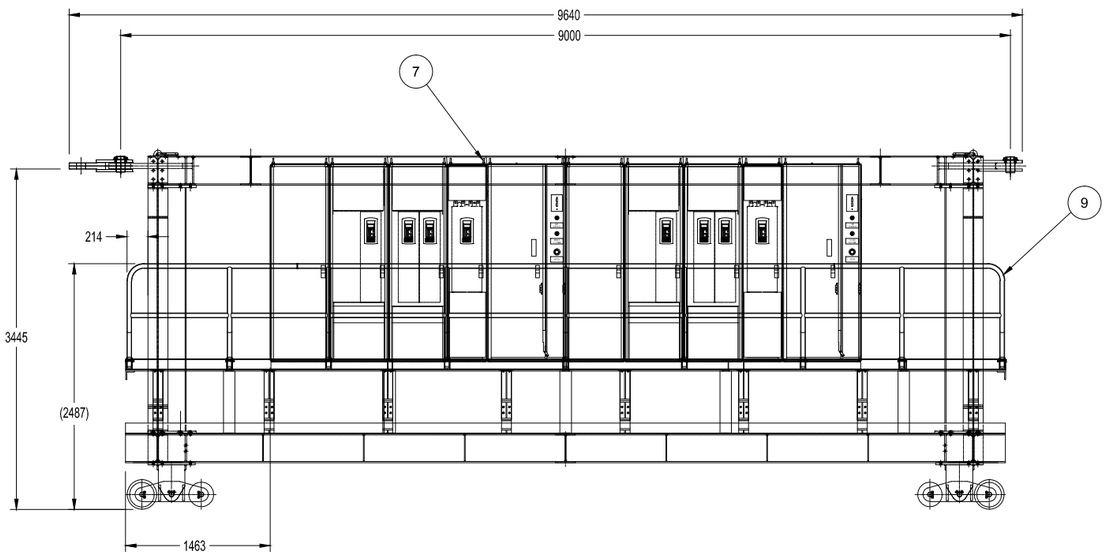

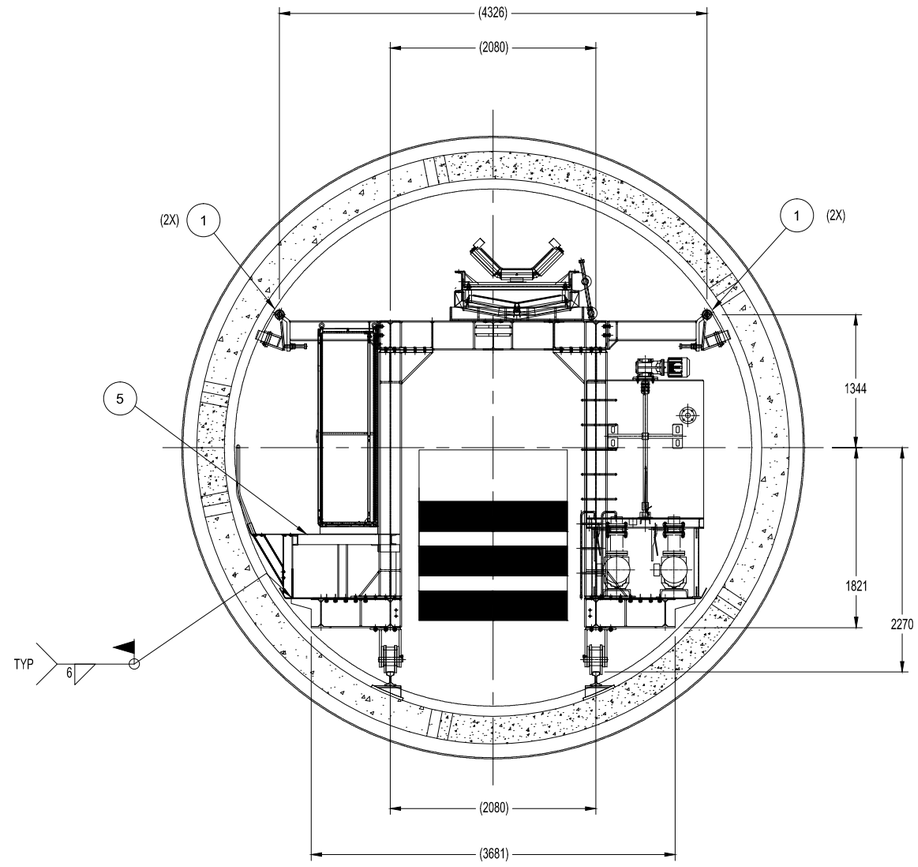

TRC P/N 1046705
GANTRY 3 ASSEMBLY RH

NOTES:

1. REMOVE ALL BURRS AND BREAK SHARP EDGES.
2. ALL WELDING SHALL MEET THE REQUIREMENTS OF THE LATEST EDITION OF THE AWS STRUCTURAL WELDING CODE - ALL SECTIONS AS APPLICABLE UNLESS OTHERWISE NOTED. USE E70XX LOW HYDROGEN ELECTRODES OR EQUIVALENT.
3. TORQUE FASTENERS PER ROBBINS DRAWING 5750 9900 17.

PROPRIETARY NOTICE
The information disclosed herein is the property of The Robbins Company, and remains their sole property. It shall not be copied, used or disclosed to anyone outside of The Robbins Company in whole or in part without prior written consent of The Robbins Company. Any copies made must contain the same proprietary notice. Made in final with this notice, without any modification. All rights reserved. Upon termination of this agreement, all data is to be returned upon request to The Robbins Company.

MACHINE	NEXT ASSY
EPB2016-376	1046701

UNLESS NOTED ALL DIMS ARE mm
TOLERANCES UNLESS NOTED

FRACTIONS	DECIMALS (mm)	ANGLES
0-300 ± 1.5	X.X ± 1.0	± 1°
300-1500 ± 3	X.XX ± .40	SURFACE
1500-6000 ± 6	X.XXX ± .100	125
6000+ ± 12		

THIRD ANGLE PROJECTION
DIMENSIONS W/ ARE REFERENCE
ALL GEOMETRIC DIMENSIONING & TOLERANCING PER ANSI Y14.5-2009

REV	DESCRIPTION	REV'D BY/ DATE	APP'D BY/ DATE

TITLE: GANTRY 3 ASSEMBLY RH

SIZE	DWG No.	REV	SHT	SCALE
D	1046705	0	1 of 1	1:1

DO NOT SCALE

DRAWN BY	CHECKED BY/ENGINEER	CHECKED BY/DESIGN	APPROVED BY
D. KING	D. WILSON	D. WILSON	J. HIENEMAN
DATE 9/2/2012			DATE 8/30/2012

WEIGHT TOTAL 25616.9

Robbins

www.TheRobbinsCompany.com

1046705

QTY. -1	PART No.	DESCRIPTION	WT. EA. kg	MATERIAL	ITEM
4	C370042	GANTRY STABILIZER ASSEMBLY	170.0		1
2	C370109	TOWING PIN ASSEMBLY	9.		2
1	1046360	GANTRY LINK	77.		3
1	1052246	EQUIPMENT SUPPORT INSTALLATION	799.3		4
1	1046796	GANTRY STEELWORK ASSEMBLY	8719.2		5
1	1048275	WALKWAY, GANTRY	654.		6
REF	D122837	BENTONITE TANK ASSEMBLY	1341		7
REF	D122915	MAIN ELEC CAB ASSY	3000		8
REF	1046956	WATER SYS ASSEMBLY	486.2		9

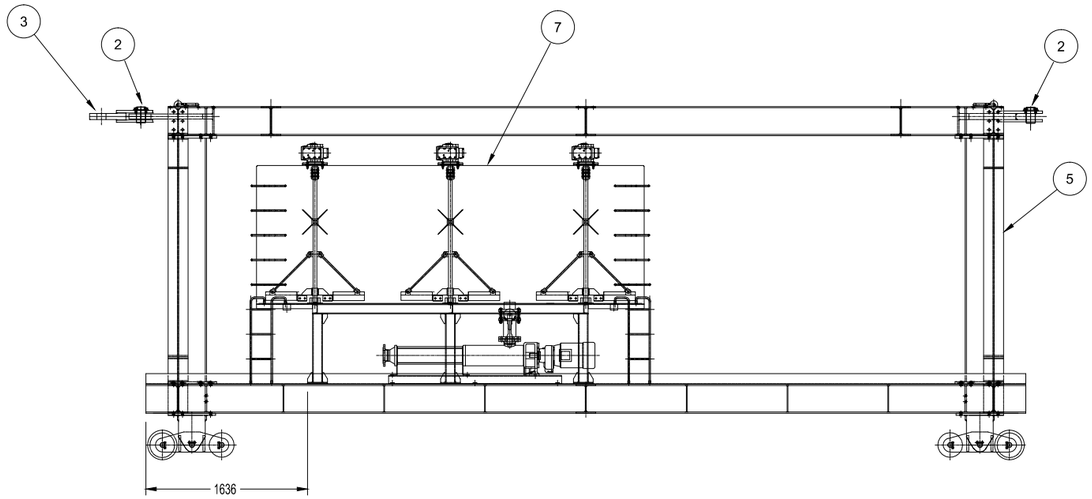

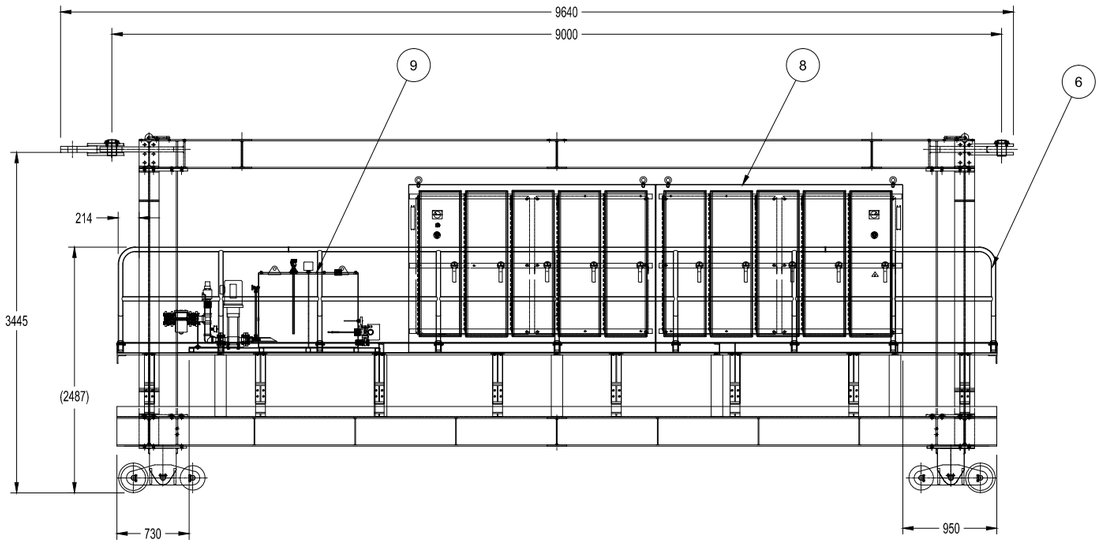

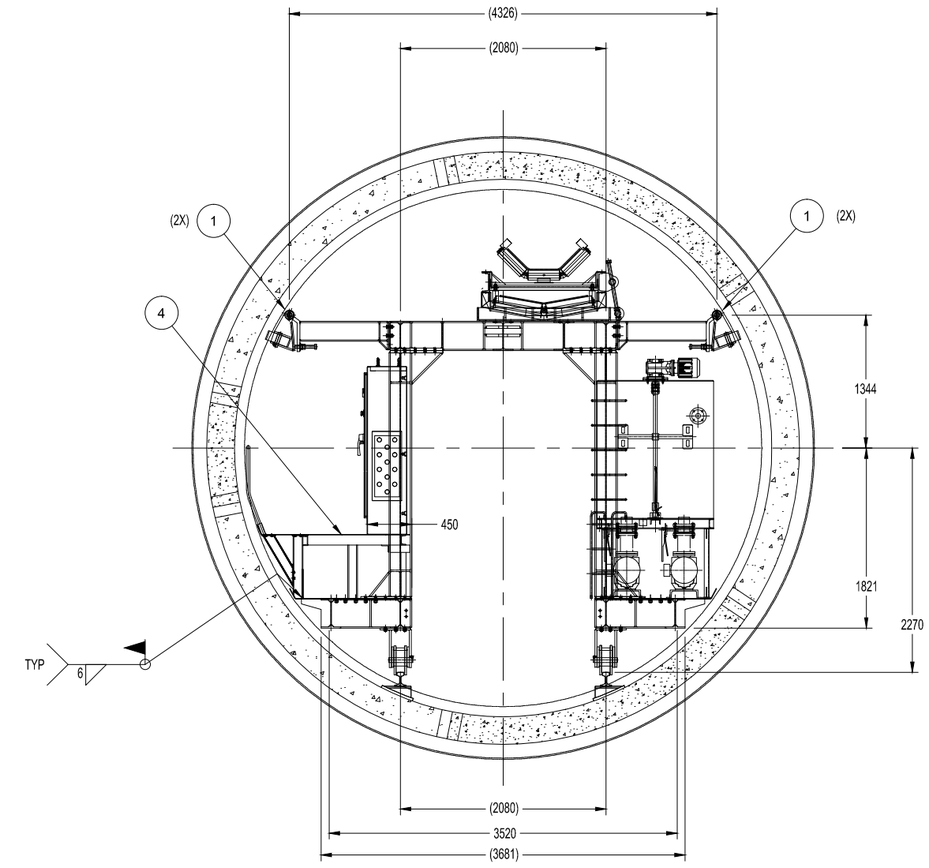

TRC P/N 1046706
GANTRY 4 ASSEMBLY RH

NOTES:

1. REMOVE ALL BURRS AND BREAK SHARP EDGES.
2. ALL WELDING SHALL MEET THE REQUIREMENTS OF THE LATEST EDITION OF THE AWS STRUCTURAL WELDING CODE - ALL SECTIONS AS APPLICABLE UNLESS OTHERWISE NOTED. USE E70XX LOW HYDROGEN ELECTRODES OR EQUIVALENT.
3. TORQUE FASTENERS PER ROBBINS DRAWING 5750 9900 17.

PROPRIETARY NOTICE
The information disclosed herein is the property of The Robbins Company, and remains their sole property. It shall not be copied, used or disclosed to others for any purpose without prior written consent of The Robbins Company. Any such copies made or disclosed to others with such consent must include this notice in full with this notice, without any modification. Any such consent shall not transfer any rights to use, copy or disclose, and is to be construed upon request to The Robbins Company.

MACHINE	NEXT ASSY
EPB2016-376	1046701

UNLESS NOTED ALL DIMS ARE mm
TOLERANCES UNLESS NOTED
LINEAR (mm): 0-300 ± 1.5; 300-1500 ± 3; 1500-6000 ± 6; 6000+ ± 12
ANGULAR: ± 1
SURFACE FINISH: 125
THROUGHOUT PROJECTION
DIMENSIONS (X) ARE REFERENCE
ALL GEOMETRIC DIMENSIONING & TOLERANCING PER ANSI Y14.5-2009

REV	DESCRIPTION	REV'D BY / DATE	APP'D BY / DATE

TITLE: GANTRY 4 ASSEMBLY RH

SIZE	DWG No.	REV	SHT	SCALE
D	1046706	0	1 OF 1	1:1

DO NOT SCALE

DRAWN BY	CHECKED BY (HEADER)	CHECKED BY (DESIGN)	APPROVED BY
D. KING	D. WILSON	D. WILSON	J. HIENEMAN
DATE: 9/2/2012			DATE: 9/30/2012

WEIGHT TOTAL: 16228.7

Robbins

www.TheRobbinsCompany.com

1046706

QTY. -1	PART No.	DESCRIPTION	WT. EA. kg	MATERIAL	ITEM
4	C370042	GANTRY STABILIZER ASSEMBLY	170.0		1
2	C370109	TOWING PIN ASSEMBLY	9.		2
1	1046360	GANTRY LINK	77.		3
REF	1047515	FOAM SYSTEM ASSY	2101.5		4
REF	1046330	TRANSFORMER	10000		5
1	1046796	GANTRY STEELWORK ASSEMBLY	8719.2		6
1	1048275	WALKWAY, GANTRY	654.		7

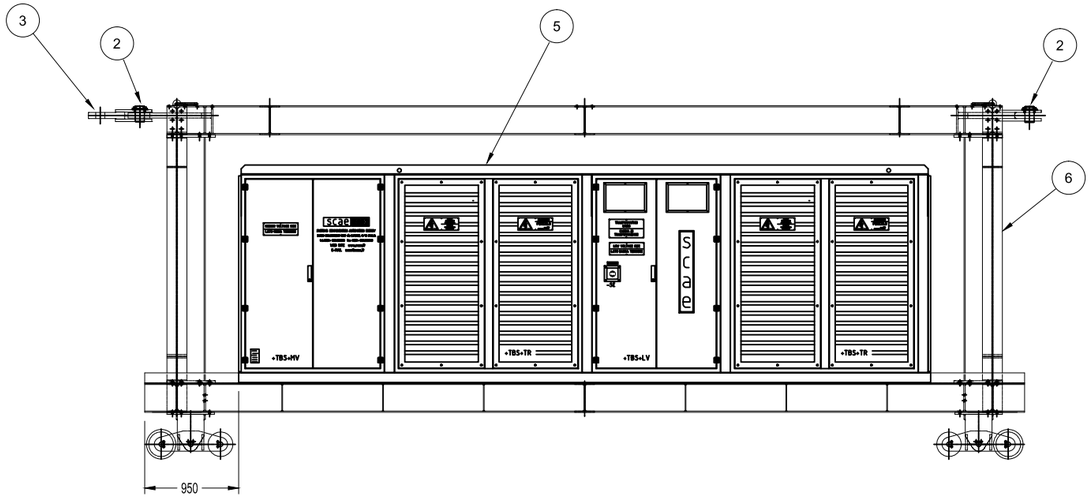

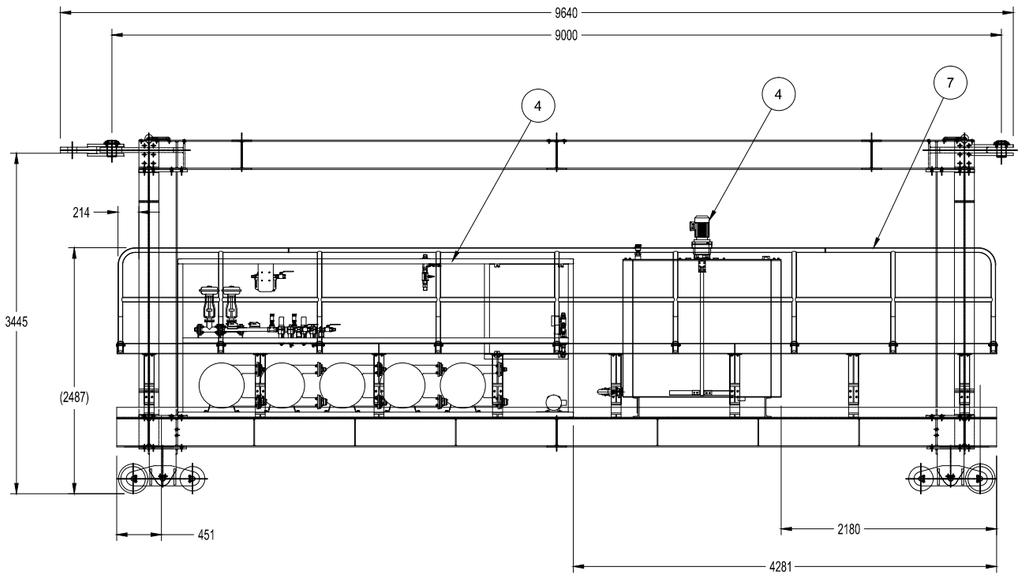

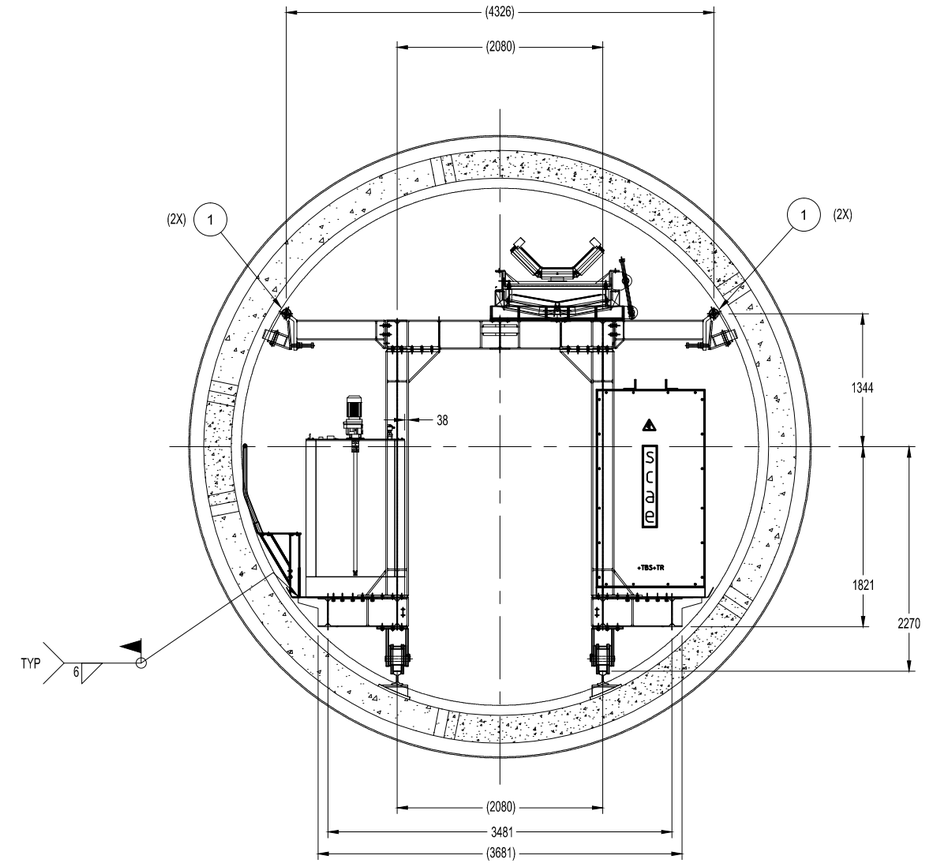

TRC P/N 1046707
GANTRY 5 ASSEMBLY RH

NOTES:

1. REMOVE ALL BURRS AND BREAK SHARP EDGES.
2. ALL WELDING SHALL MEET THE REQUIREMENTS OF THE LATEST EDITION OF THE AWS STRUCTURAL WELDING CODE - ALL SECTIONS AS APPLICABLE UNLESS OTHERWISE NOTED. USE E70XX LOW HYDROGEN ELECTRODES OR EQUIVALENT.
3. TORQUE FASTENERS PER ROBBINS DRAWING 5750 9900 17.

PROPRIETARY NOTICE
The information contained in this drawing is the property of The Robbins Company, and remains their sole property. It will not be copied or used, in whole or in part, for any purpose, by any other party without prior written consent of The Robbins Company. Any such consent shall expressly grant the right to divulge and to use the information contained in this drawing for the manufacture, use and sale of equipment or processes, and it is to be returned upon request to The Robbins Company.

MACHINE	NEXT ASSY
EPB2016-376	1046701

UNLESS NOTED ALL DIMS ARE mm
TOLERANCES UNLESS NOTED

RAD (mm)	MACHINING (mm)	
0-300 ± 1.5	X	± 1.5
300-1500 ± 3	X.X	± 1.0
1500-4000 ± 6	X.XX	± .40
6000+ ± 12	X.XXX	± .100
THIRD ANGLE PROJECTION	ANGLES	± 1°
	SURFACE	63
	FINISH	

DIMENSIONS (X) ARE REFERENCE
ALL GEOMETRIC DIMENSIONING & TOLERANCING PER ANSI Y14.5-2009

REV	DESCRIPTION	REV'D BY / DATE	APP'D BY / DATE

TITLE: GANTRY 5 ASSEMBLY RH

SIZE	DWG No.	REV	SHT	SCALE
D	1046707	0	1 OF 1	1:1

DO NOT SCALE

DRAWN BY: D. KING — DATE: 9/2/2012
CHECKED BY: D. WILSON
CHECKED BY: D. WILSON
WEIGHT TOTAL: 22249.7
APPROVED BY: J. HIENEMAN
DATE: 8/30/2012

Robbins

www.TheRobbinsCompany.com

1046707

QTY. -1	PART No.	DESCRIPTION	WT. EA. kg	MATERIAL	ITEM
4	C370042	GANTRY STABILIZER ASSEMBLY	170.0		1
2	C370109	TOWING PIN ASSEMBLY	9.		2
1	1046360	GANTRY LINK	77.		3
REF	2006819	WATER TANK ASSEMBLY	1379.8		4
REF	1045737	GENSET ELEC. CABINET	300		5
1	1046796	GANTRY STEELWORK ASSEMBLY	8719.2		6
1	1048275	WALKWAY, GANTRY	654.		7

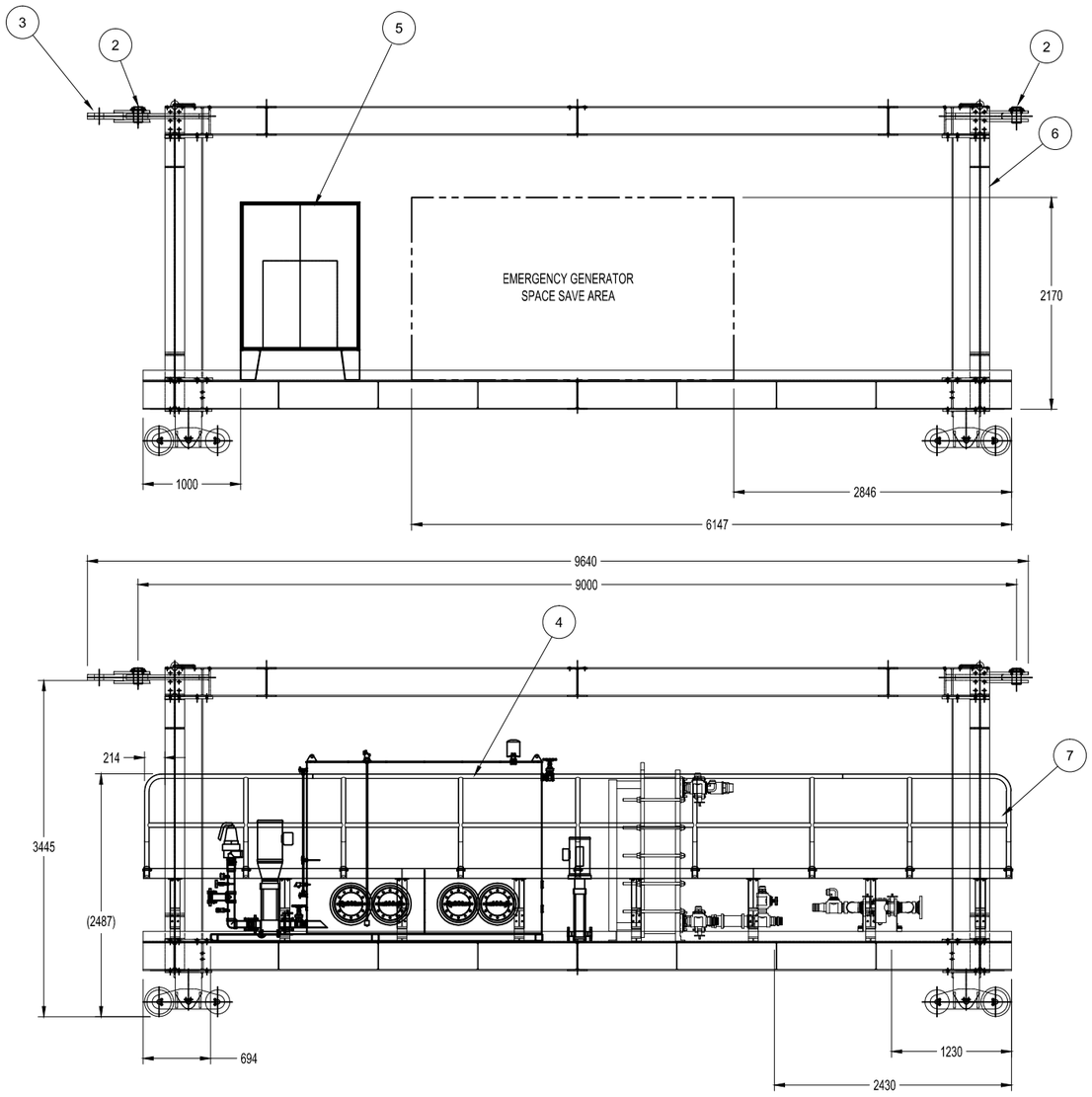

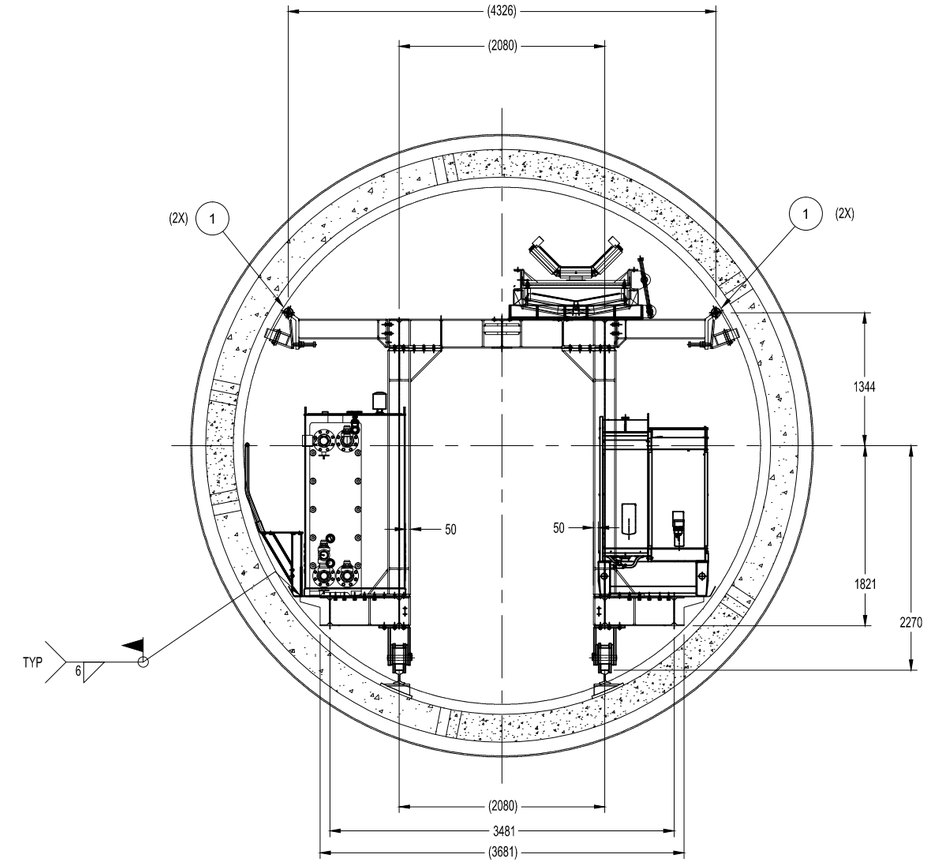

TRC P/N 1046708
GANTRY 6 ASSEMBLY RH

NOTES:

1. REMOVE ALL BURRS AND BREAK SHARP EDGES.
2. ALL WELDING SHALL MEET THE REQUIREMENTS OF THE LATEST EDITION OF THE AWS STRUCTURAL WELDING CODE - ALL SECTIONS AS APPLICABLE UNLESS OTHERWISE NOTED. USE E70XX LOW HYDROGEN ELECTRODES OR EQUIVALENT.
3. TORQUE FASTENERS PER ROBBINS DRAWING 5750 9900 17.

PROPRIETARY NOTICE
The information disclosed herein is the property of The Robbins Company, and remains their sole property. It shall not be copied, reproduced, or transferred to any other party without prior written consent of The Robbins Company. This notice shall be affixed to any reproduction in whole or in part of this drawing. Any modification or deletion of this notice, without any modification whatsoever, is a violation of the agreement under which it is to be returned upon request to The Robbins Company.

MACHINE	NEXT ASSY
EPB2016-376	1046701

UNLESS NOTED ALL DIMS ARE mm
TOLERANCES UNLESS NOTED
FRACTIONS: 0-300 ± 1.5; 300-1500 ± 3; 1500-6000 ± 6; 6000+ ± 12
DECIMALS (mm): X ± 1.5; X.X ± 1.0; X.XX ± .40; X.XXX ± .100
ANGLES ± 1°
SURFACE
THIRD ANGLE PROJECTION
DIMENSIONS (X) ARE REFERENCE
ALL GEOMETRIC DIMENSIONING & TOLERANCING PER ANSI Y14.5-2009

REV	DESCRIPTION	REV'D BY/ DATE	APP'D BY/ DATE
0	INITIAL RELEASE	D. KING 9/2/2012	J. HIENEMAN 8/30/2012

TITLE: GANTRY 6 ASSEMBLY RH

SIZE: D | DWG No.: 1046708 | REV: 0 | SHT 1 OF 1 | SCALE: 1:1 | DO NOT SCALE

DRAWN BY: D. KING | DATE: 9/2/2012
CHECKED ETABARES: D. WILSON
CHECKED DESIGN: D. WILSON
APPROVED BY: J. HIENEMAN | DATE: 8/30/2012
WEIGHT TOTAL: 18536.6

Robbins

www.TheRobbinsCompany.com

1046708

QTY. -1	PART No.	DESCRIPTION	WT. EA. kg	MATERIAL	ITEM
4	C370042	GANTRY STABILIZER ASSEMBLY	170.0		1
2	C370109	TOWING PIN ASSEMBLY	9.		2
1	1046360	GANTRY LINK	77.		3
REF	1048320	AIR COMPRERSSOR	1428		4
REF	2006820	WATER TANK ASSEMBLY	1485.1		5
1	1046796	GANTRY STEELWORK ASSEMBLY	8719.2		6
1	1048275	WALKWAY, GANTRY	654.		7

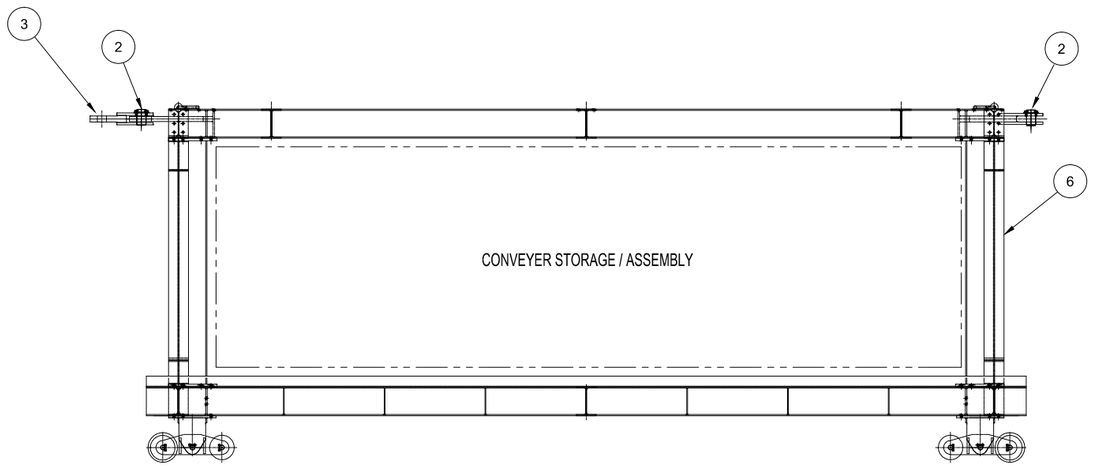

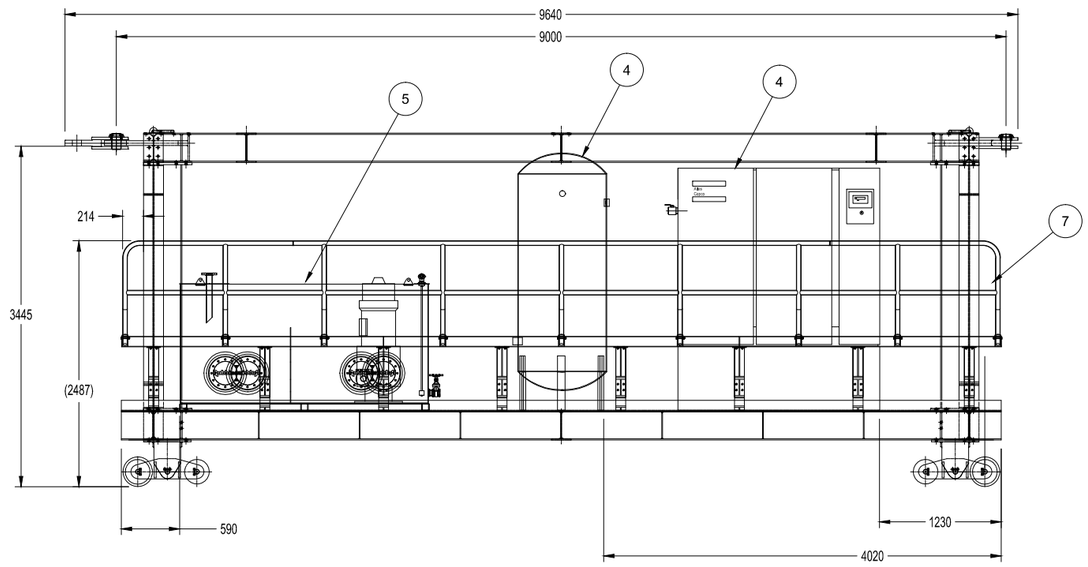

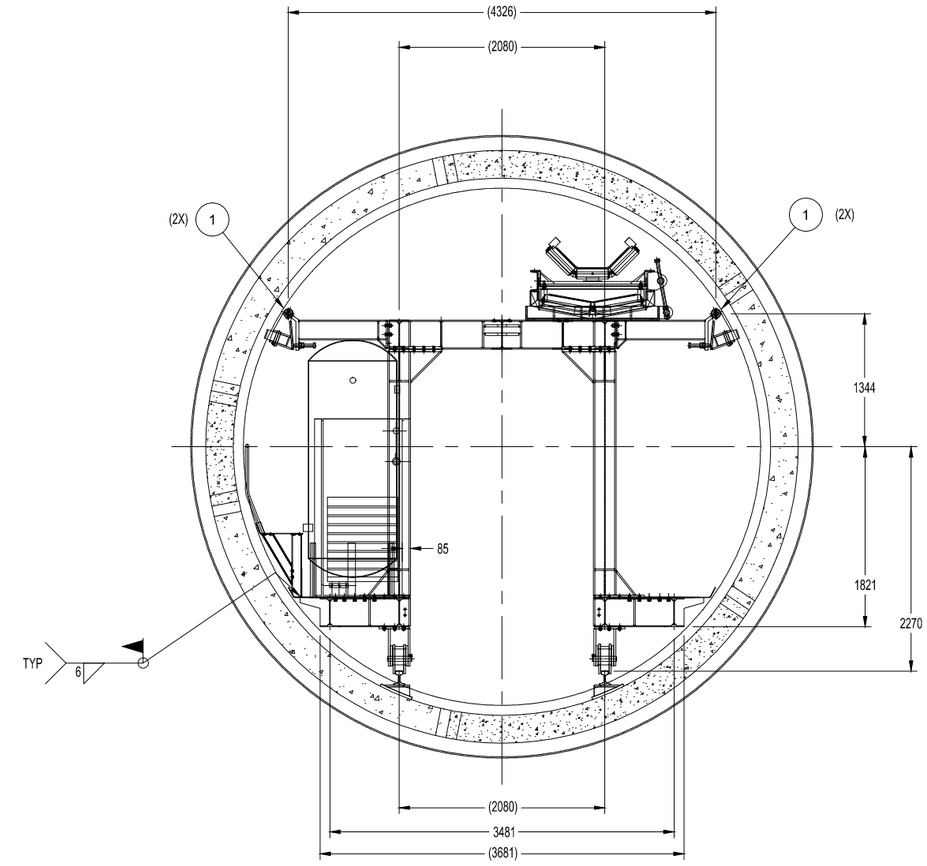

TRC P/N 1046709
GANTRY 7 ASSEMBLY RH

NOTES:

1. REMOVE ALL BURRS AND BREAK SHARP EDGES.
2. ALL WELDING SHALL MEET THE REQUIREMENTS OF THE LATEST EDITION OF THE AWS STRUCTURAL WELDING CODE - ALL SECTIONS AS APPLICABLE UNLESS OTHERWISE NOTED. USE E70XX LOW HYDROGEN ELECTRODES OR EQUIVALENT.
3. TORQUE FASTENERS PER ROBBINS DRAWING 5750 9900 17.

PROPRIETARY NOTICE
The information disclosed herein is the sole property of The Robbins Company, and remains their sole property. It shall not be disclosed to a full or part, used by, or disclosed to any other party without prior written consent of The Robbins Company. By accepting this information, the recipient agrees to abide in total with this notice, without any modification whatever to the conditions. This material is not to be used and is to be returned upon request to The Robbins Company.

MACHINE	NEXT ASSY
EPB2016-376	1046701

UNLESS NOTED ALL DIMS ARE mm
TOLERANCES UNLESS NOTED

FAB (mm)		MACHINING (mm)	
0-300	± 1.5	X	± 1.5
300-1500	± 3	X.X	± 1.0
1500-6000	± 6	X.XX	± .40
6000+	± 12	X.XXX	± .100
		ANGLES	± 1
		SURFACE	63

THIRD ANGLE PROJECTION
DIMENSIONS (X) ARE REFERENCE
ALL GEOMETRIC DIMENSIONING & TOLERANCING PER ANSI Y14.5-2009

REV	DESCRIPTION	REV'D BY/ DATE	APP'D BY/ DATE

TITLE: GANTRY 7 ASSEMBLY RH

SIZE	DWG No.	REV	SHT	SCALE
D	1046709	0	1 OF 1	1:1 DO NOT SCALE

Robbins

DRAWN BY	CHECKED IT TO DRAWING
D. KING	D. WILSON
DATE 9/2/2012	CHECKED DESIGN D. WILSON
WEIGHT TOTAL 14546.4	APPROVED BY J. HIENEMAN DATE 8/30/2012

www.TheRobbinsCompany.com

1046709

QTY. -1	PART No.	DESCRIPTION	WT. EA. kg	MATERIAL	ITEM
2	C370042	GANTRY STABILIZER ASSEMBLY	170.0		1
2	1052248	GANTRY STABILIZER ASSEMBLY	65.2		2
2	C370109	TOWING PIN ASSEMBLY	9.		3
1	1046360	GANTRY LINK	77.		4
2	1035133	CABLE BASKET	2329.6		5
2	1052624	HOIST BEAM ASSEMBLY	112.4		6
1	1049554	GANTRY STEELWORK ASSEMBLY	9546		7
1	1048275	WALKWAY, GANTRY	654.		8
REF	1046408	CONV. HEAD FRAME	3619.5		9

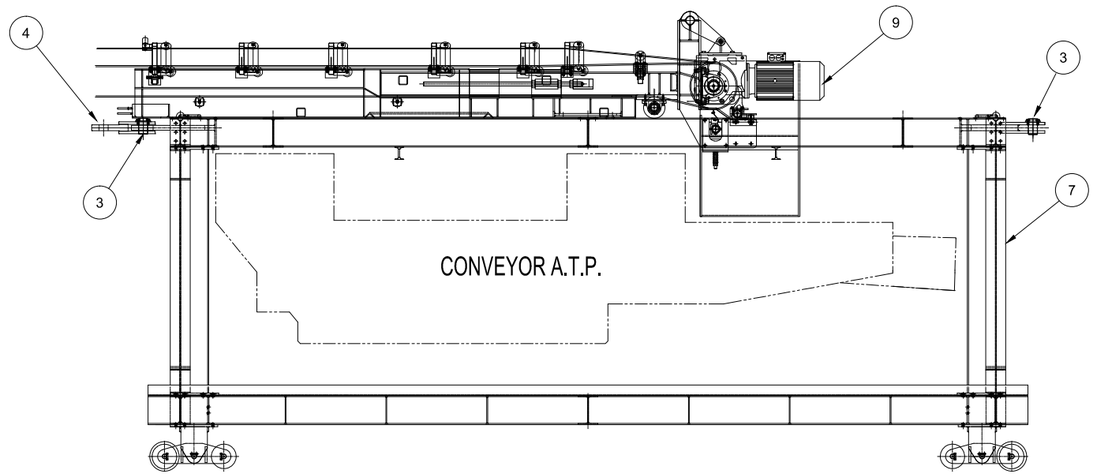

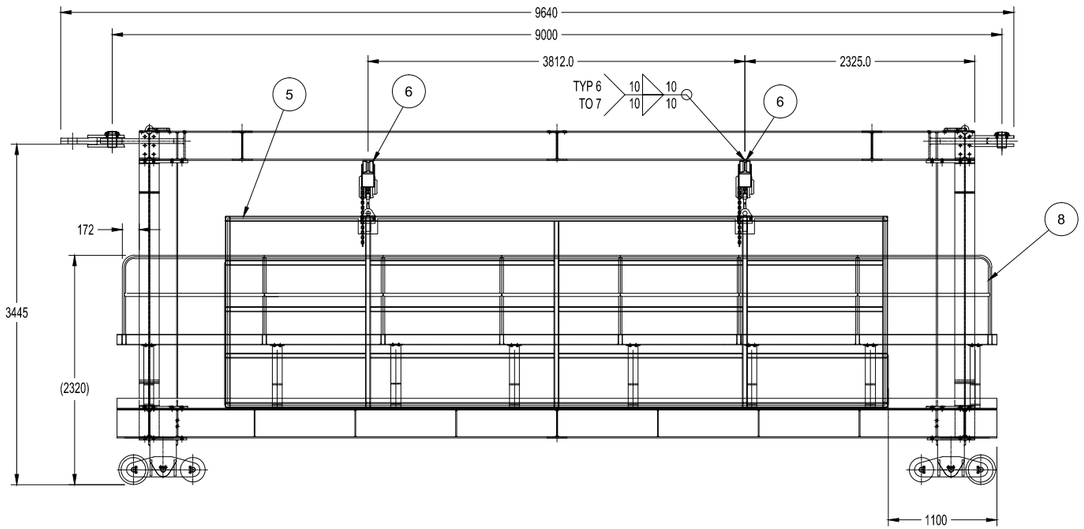

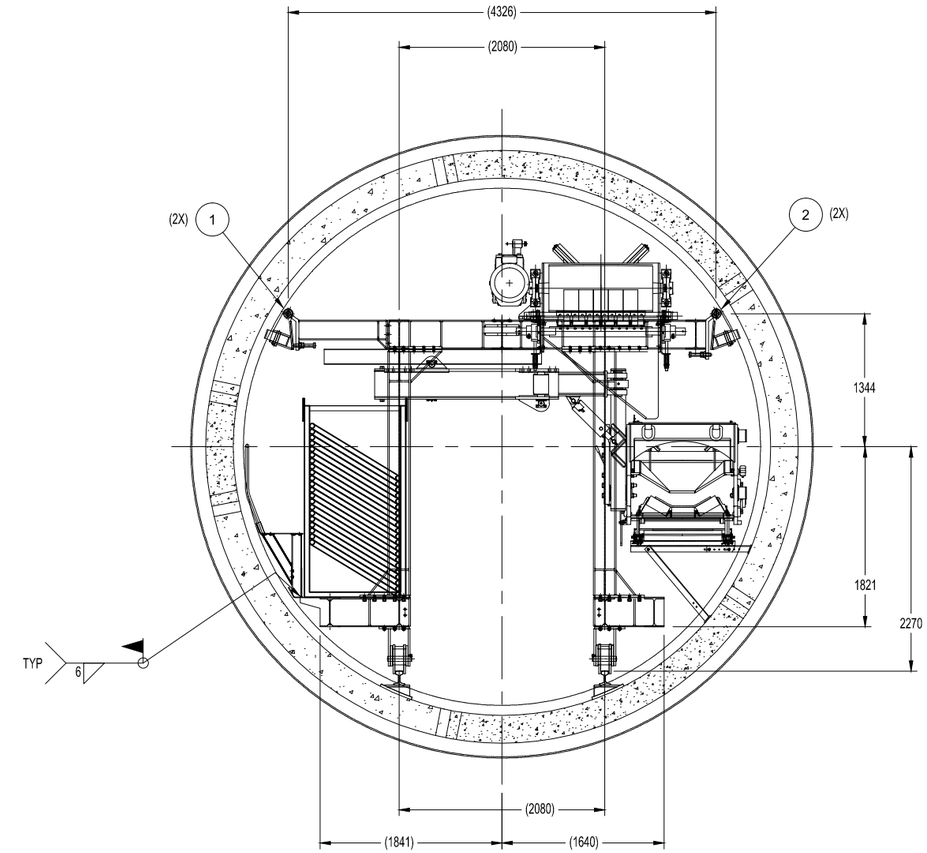

TRC P/N 1046710
GANTRY 8 ASSEMBLY RH

NOTES:

1. REMOVE ALL BURRS AND BREAK SHARP EDGES.
2. ALL WELDING SHALL MEET THE REQUIREMENTS OF THE LATEST EDITION OF THE AWS STRUCTURAL WELDING CODE - ALL SECTIONS AS APPLICABLE UNLESS OTHERWISE NOTED. USE E70XX LOW HYDROGEN ELECTRODES OR EQUIVALENT.
3. TORQUE FASTENERS PER ROBBINS DRAWING 5750 9900 17.

PROPRIETARY NOTICE
The information disclosed herein is the exclusive property of The Robbins Company, and remains their sole property. It shall not be copied, used, or disclosed to anyone outside of your company or other party without prior written consent of The Robbins Company. Any copies made of this drawing must include this same notice. By accepting this drawing, you agree to abide in full with this notice, without any modification. Unauthorized use of this drawing may violate state and federal laws and is to be returned upon request to The Robbins Company.

MACHINE	NEXT ASSY
EPB2016-376	1046701

UNLESS NOTED ALL DIMS ARE mm
TOLERANCES UNLESS NOTED

FABRICATING [mm]		MACHINING [mm]	
0-300	± 1.5	X	± 1.5
300-1500	± 3	X.X	± 1.0
1500-6000	± 6	X.XX	± .40
6000+	± 12	X.XXX	± .100
		ANGLES	± 1°
		SURFACE	

THIRD ANGLE PROJECTION
DIMENSIONS (X) ARE REFERENCE
ALL GEOMETRIC DIMENSIONING & TOLERANCING PER ANSI Y14.5-2009

REV	DESCRIPTION	REV'D BY DATE	APP'D BY DATE

TITLE: GANTRY 8 ASSEMBLY RH

SIZE	DWG No.	REV	SHT	OF	SCALE
D	1046710	0	1	1	1:1 DO NOT SCALE

DRAWN BY	CHECKED BY/ANSWERED
D. KING	D. WILSON
DATE	CHECKED BY/DESIGN
9/2/2012	D. WILSON
WEIGHT TOTAL	APPROVED BY
16582.7	J. HIENEMAN
	DATE 8/30/2012

Robbins
www.TheRobbinsCompany.com

1046710

QTY. -1	PART No.	DESCRIPTION	WT. EA. kg	MATERIAL	ITEM
2	C370042	GANTRY STABILIZER ASSEMBLY	170.		1
1	C370109	TOWING PIN ASSEMBLY	9.		2
1	1046360	GANTRY LINK	77.		3
REF	1046479	HOSE REEL ASSEMBLY	1632.		4
REF	1048367	HOSE REEL ASSEMBLY	454.4		5
1	1046580	GANTRY STEELWORK ASSEMBLY	7132		6
1	1048275	WALKWAY, GANTRY	654.		7
1	1048226	TUNNEL DUCT EXTENDER ASY	3203		8

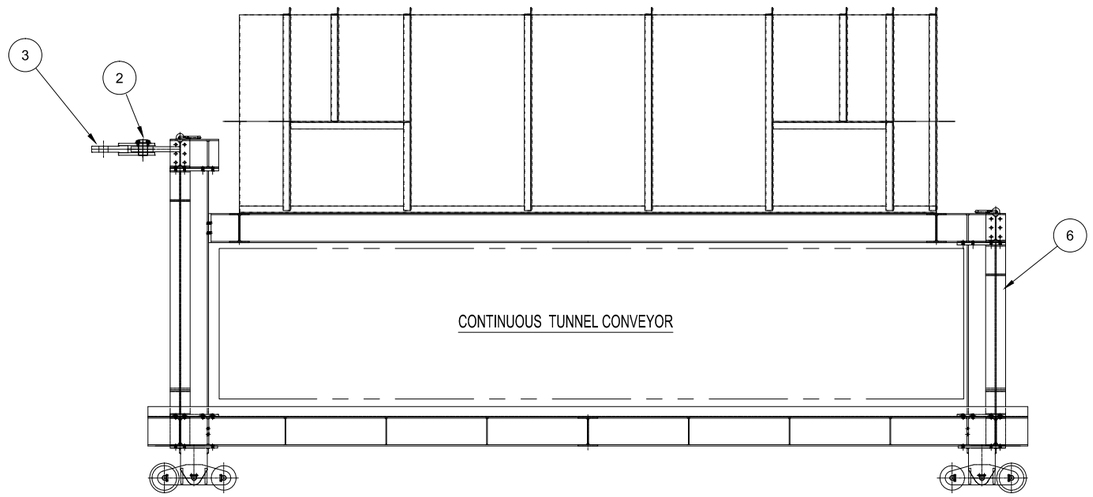

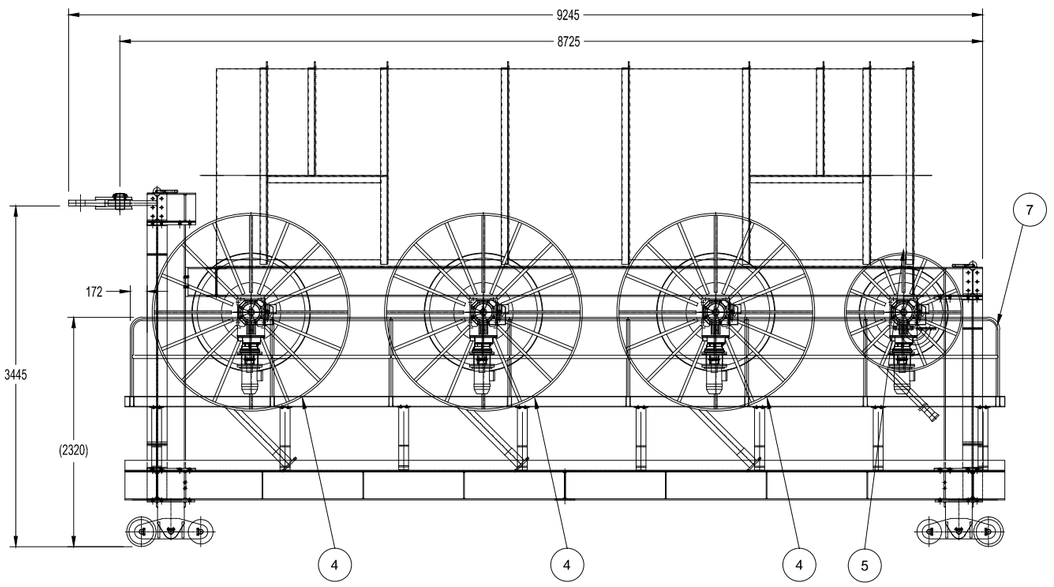

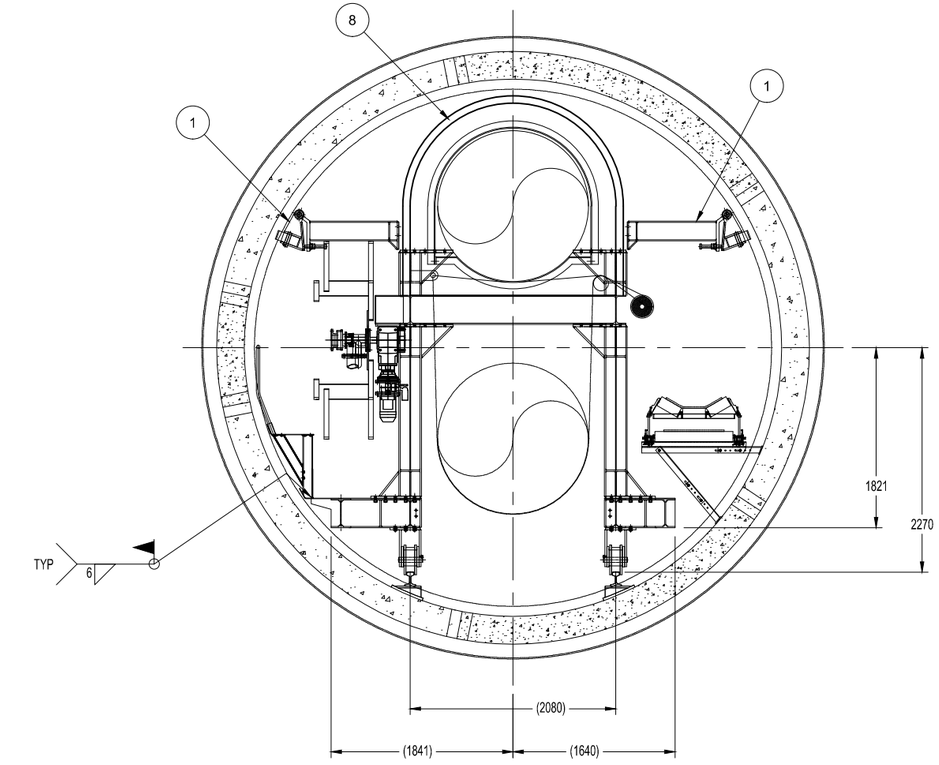

TRC P/N 1046711
GANTRY 9 ASSEMBLY RH

NOTES:

1. REMOVE ALL BURRS AND BREAK SHARP EDGES.
2. ALL WELDING SHALL MEET THE REQUIREMENTS OF THE LATEST EDITION OF THE AWS STRUCTURAL WELDING CODE - ALL SECTIONS AS APPLICABLE UNLESS OTHERWISE NOTED. USE E70XX LOW HYDROGEN ELECTRODES OR EQUIVALENT.
3. TORQUE FASTENERS PER ROBBINS DRAWING 5750 9900 17.

PROPRIETARY NOTICE
The information disclosed herein is the property of The Robbins Company, and remains their sole property. It shall not be copied, used or disclosed to others in whole or in part for any other purpose without prior written consent of The Robbins Company. Any copies made of this drawing must contain the same proprietary notice as is borne by the original. This notice shall not be defaced or removed from any copy made of this drawing in whole or in part, and is to be returned upon request to The Robbins Company.

MACHINE	NEXT ASSY
EPB2016-376	1046701

UNLESS NOTED ALL DIMS ARE mm
TOLERANCES UNLESS NOTED

FAB (mm)	MACHINING (mm)	
0-300 ± 1.5	X ± 1.5	
300-1500 ± 3	X.X ± 1.0	
1500-6000 ± 6	X.XX ± .40	
6000+ ± 12	X.XXX ± .100	
	ANGLES ± 1°	
	SURFACE	
THIRD ANGLE PROJECTION	FINISH	

DIMENSIONS (X) ARE REFERENCE
ALL GEOMETRIC DIMENSIONING & TOLERANCING PER ANSI Y14.5-2009

REV	DESCRIPTION	REV'D BY DATE	APP'D BY DATE

TITLE: GANTRY 9 ASSEMBLY RH

SIZE: D | DWG No.: 1046711 | REV: 0 | SHT 1 OF 1 | SCALE: 1:1 DO NOT SCALE

DRAWN BY: D. KING
DATE: 9/2/2012
CHECKED BY ANDREW: D. WILSON
CHECKED DESIGN: D. WILSON
WEIGHT TOTAL: 13396.6
APPROVED BY: J. HIENEMAN
DATE: 8/30/2012

Robbins
www.TheRobbinsCompany.com

1046711

QTY	PART No.	DESCRIPTION	DWG No.	WT. Total	ITEM
1	1046797	GANTRY TOP FRAME	1046582	2221.0 Kg	1
2	D370045-1	GANTRY BOTTOM FRAME	1046668	3759.4 Kg	2
2	D370022-1	GANTRY SUPPORT STRUCTURE- R.H.	D370022	783.8 Kg	3
2	D370022-2	GANTRY SUPPORT STRUCTURE- L.H.	D370022	783.8 Kg	4
2	C370053-1	WHEELBOX ASSEMBLY-R.H.	C370053	566.8 Kg	5
2	C370053-2	WHEELBOX ASSEMBLY-L.H.	C370053	566.8 Kg	6
32	A22152-60655	HHCS, M20 X 65mm LG, C8.8	A22152	6.7 Kg	7
44	A22152-60705	HHCS, M20 X 70mm LG, C8.8	A22152	9.7 Kg	8
40	A22152-60805	HHCS, M20 X 80mm LG, C8.8	A22152	9.6 Kg	9
232	A22158-6	WASHER, HARDENED M20	A22158	4.6 Kg	10
116	A22154-65	HEX NUT, M20, C8	A22154	7.0 Kg	11

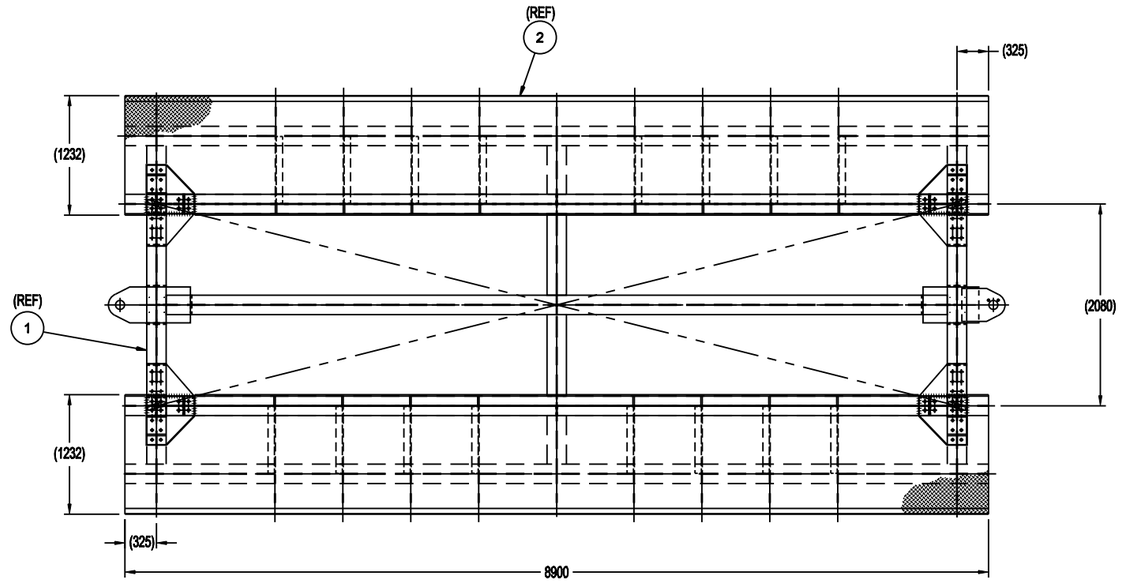

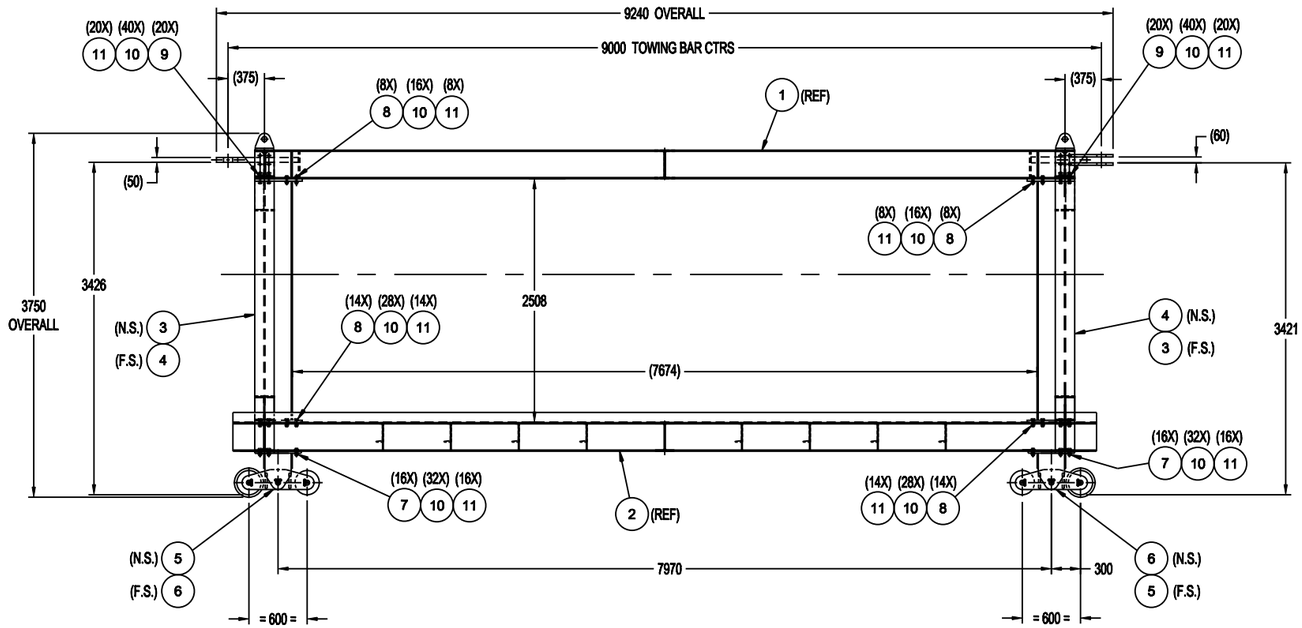

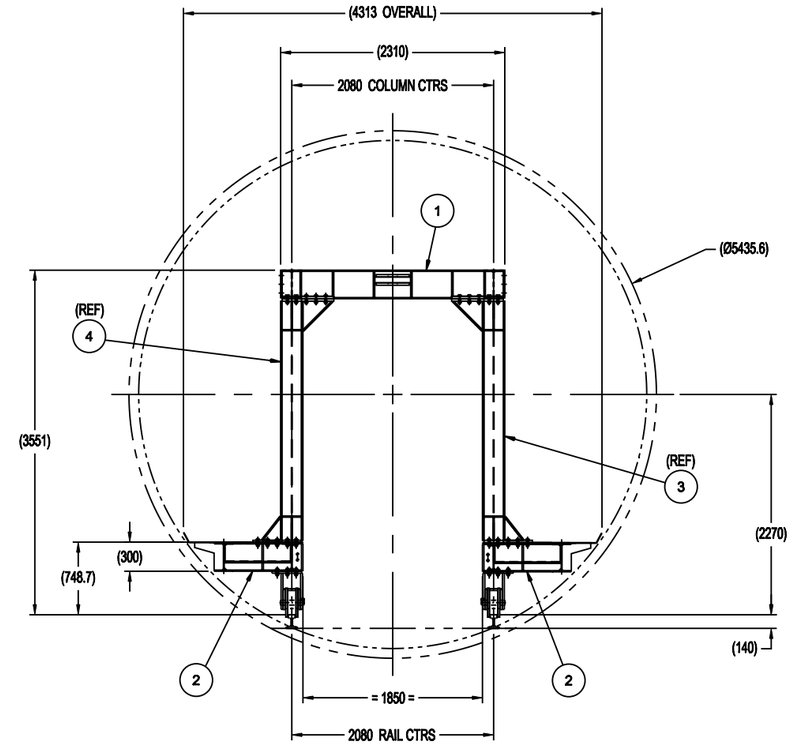

NOTES:

1. TORQUE FASTENERS PER ROBBINS DRAWING 5750 9900 17.

TRC P/N 1046796
GANTRY STEELWORK ASSEMBLY

MACHINE	NEXT ASSY
EPB2016-376	1046703
EPB2016-377	1046712

UNLESS NOTED ALL DIMS ARE mm
TOLERANCES UNLESS NOTED
0-300 ± 1.5
300-1500 ± 3
1500-6000 ± 6
6000+ ± 12
X ± 1.5
X.X ± 1.0
X.XX ± .40
X.XXX ± .100
ANGLES ± 1
SURFACE FINISH
DIMENSIONS (X) ARE REFERENCE
ALL GEOMETRIC DIMENSIONING & TOLERANCING PER ANSI Y14.5-2009

REV | DESCRIPTION | REV'D BY/ DATE | APP'D BY/ DATE

TITLE: GANTRY STEELWORK ASSEMBLY

SIZE: D | DWG No.: 1046796 | REV: 0 | SHT 1 OF 1 | SCALE: 1:30 DO NOT SCALE

DRAWN BY: L.LANGEL | DATE: 3/16/2012 | CHECKED STANDARDS: D.WILSON | CHECKED DESIGN: D.WILSON

WEIGHT TOTAL: 8720.0 Kg | APPROVED BY: J.HEINEMAN | DATE: 3/16/2012

Robbins

www.TheRobbinsCompany.com

PROPRIETARY NOTICE
This information disclosed herein, is the sole property of The Robbins Company, and neither the sale of any product, it shall not be duplicated in full or part, nor used by, or disclosed to any other party without prior written consent of The Robbins Company. By accepting this information, the recipient agrees to abide in kind with the notice, without any modification whatsoever to the contents. This material is not to be used, and is to be returned upon request to The Robbins Company.

1046796

QTY. -2	QTY. -1	PART No.	DESCRIPTION	WT. EA. Kg	MATERIAL	ITEM
	–	C370053-1	WHEELBOX ASSEMBLY – RGB-AS-10-001	283.4	–	1
–		C370053-2	WHEELBOX ASSEMBLY – LGB-AS-10-002	283.4	–	2
	1	C370054-1	WHEEL BRACKET – R.H	62.9	–	3
1		C370054-2	WHEEL BRACKET – L.H	62.9	–	4
1	1	C370025-1	WHEEL BOGEY	51.3	–	5
1	1	B370026-1	PLAIN WHEEL	44.4	–	6
1	1	B370027-1	FLANGED WHEEL	49.2	–	7
2	2	B370028-1	WHEEL AXLE	3.1	–	8
3	3	B370029-1	KEY PLATE	0.1	–	9
1	1	B370030-1	PIVOT AXLE	3.8	–	10
4	4	B370031-1	FLANGED BUSH	0.6	–	11
6	6	A22152-20255	HEX BOLT M8 X 25 GB-11-104-080258	–	–	12
6	6	A22159-2	LOCK WASHER M8 GB-11-109-080000	–	–	13
2	2	-14	1/8" NPT GREASE NIPPLE GB-11-119-180000	–	–	14

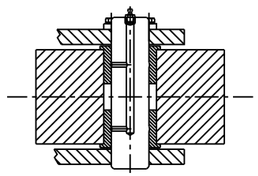

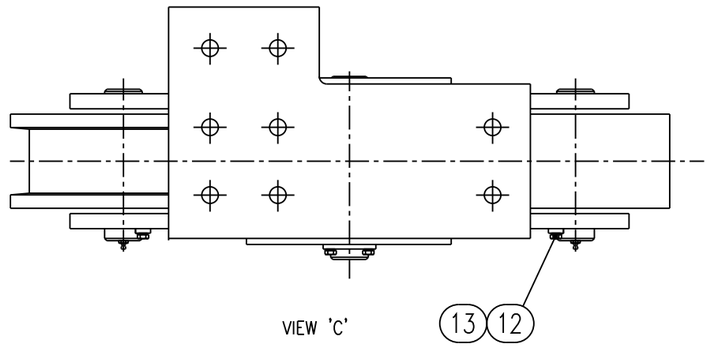

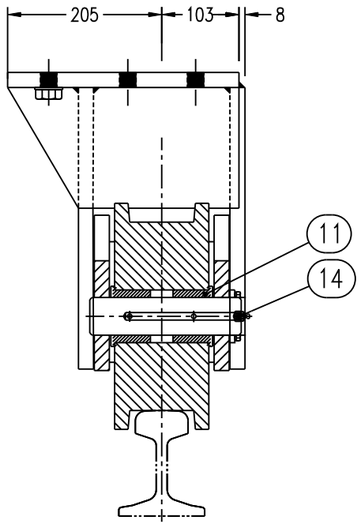

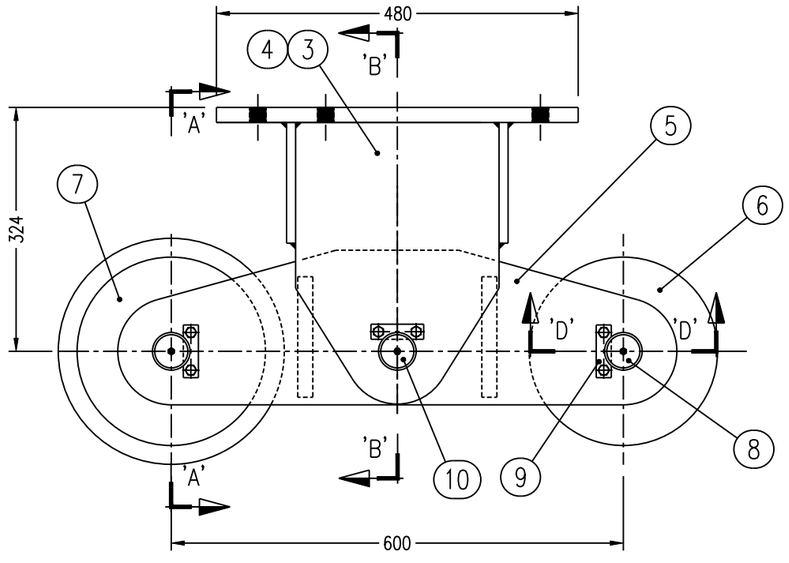

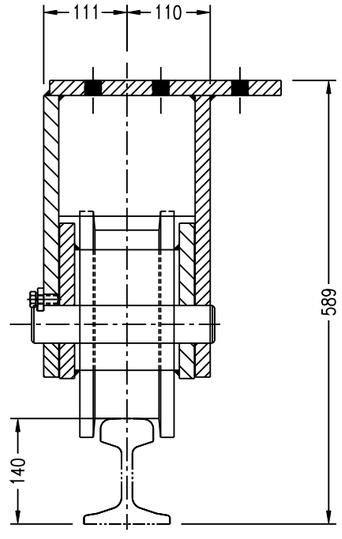

C370053-1 SHOWN
C370053-2 OPPOSITE

PROPRIETARY NOTICE
The information disclosed herein is the sole property of The Robbins Company, and remains their sole property. It shall not be duplicated in full or part, used by, or disclosed to any other party without the prior written consent of the Robbins Company. By receipt of this information, recipient agrees to abide in full with this notice, without any modification whatsoever, to the conditions. This material is on loan only, and is upon request to be returned to The Robbins Company.

DESCRIPTION | ZONE | BY/DATE | REV

TOLERANCES UNLESS NOTED
FAB (mm): 0–300 ±1.5; 300–1500 ±3; 1500–6000 ±6; 6000+ ±12
FLAME CUT STD/CLASS
WELDING STD/CLASS
MACHINING (mm): X ±1.5; X.X ±1.0; X.XX ±.40; X.XXX ±.100; ANGLES ±1°; SURFACE FINISH 3.2
MACHINING STD/CLASS

MACHINE: EPB209-340/341
NEXT ASSY: D114884
w/O#
DO NOT SCALE
THIRD ANGLE PROJECTION
ALL GEOMETRIC DIMENSIONING AND TOLERANCING PER ISO R1101 – 1983
DIMS (X) ARE REF
SCALE 1:5

TITLE
WHEELBOX ASSEMBLY–R.H

SIZE C | DWG No C370053 | REV 0 | SHT 1 OF 1 | ORIGIN RC RED reserved

Phone: (440) 248-3303
Fax: (440) 248-1702
Robbins
THE ROBBINS COMPANY
29100 Hall Street
Solon, Ohio 44139 USA
Kent, WA:
Phone (253) 872-0500
Fax: (253) 872-0199
Oak Hill, WV:
Phone (304) 465-5880
Fax: (304) 465-5886

DRAWN RAIN ZHANG DATE 2009-09-01 | CHECKED SAM.T DATE 2009-09-02

C370053

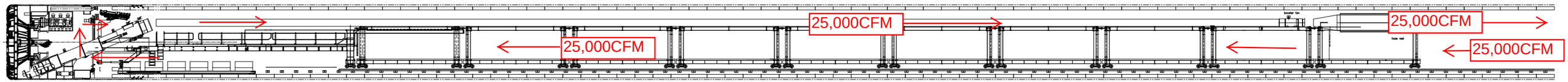
25,000CFM
25,000CFM
25,000CFM
25,000CFM

NOTES:

1. REMOVE ALL BURRS AND BREAK SHARP EDGES.
2. ALL WELDING SHALL MEET THE REQUIREMENTS OF THE LATEST EDITION OF THE AWS STRUCTURAL WELDING CODE (D1.1/D1.1M), ALL SECTIONS AS APPLICABLE UNLESS OTHERWISE NOTED. USE E70XX LOW HYDROGEN ELECTRODES OR EQUIVALENT.
3. TORQUE FASTENERS PER DRAWING 5750 9900 17.
4. VENDOR TO SUBMIT MATERIAL SELECTION AND TYPICAL SEAM CONNECTION TO WITHSTAND PRESSURE RATING LISTED ABOVE TO ROBBINS ENGINEERING FOR APPROVAL.
5. VENDOR TO PROVIDE WEIGHTS AND ANY SPARE PARTS REQUIRED TO ROBBINS ENGINEERING.

SPECIFICATIONS:

WORKING PRESSURE: P_1 = (- 4000 + 4000) Pa;

QTY	PART No.	DESCRIPTION	DWG No.	WT. Total	ITEM
1	1047227	VENTILATION FAN	1047227	925.3 Kg	1
19	1049987	CLAMP ASSEMBLY, VENT PIPE	1049987	127.3 Kg	2
3	1050009	RAISED CLAMP ASSEMBLY, VENT PIPE	1050009	43.5 Kg	3
1	1050328	PIPE, VENTILATION	1050328	475.0 Kg	4
6	1050329	PIPE, VENTILATION	1050329	2,034.0 Kg	5
1	1050331	PIPE, VENTILATION	1050331	247.0 Kg	6
1	1050332	PIPE, VENTILATION	1050332	95.0 Kg	7
1	1050333	PIPE, VENTILATION	1050333	486.0 Kg	8
2	1050366	CLAMP ASSEMBLY, VENT PIPE	1050366	11.2 Kg	9
1	1050370	RAISED CLAMP ASSEMBLY, VENT PIPE	1050370	8.5 Kg	10
3	1050387	SUPPORT BRACKET, VENT PIPE	1050387	57.9 Kg	11
1	1050388	ELBOW, VENT PIPE	1050388	90.0 Kg	12
1	1050389	ELBOW, VENT PIPE	1050389	90.0 Kg	13
3	1050833	GASKET, FLANGE	1050833	1.38 Kg	14
9	1050834	FLEXIBLE DUCT	1050834	0.09 Kg	15
2	1050569	GUARD, VENT PIPE	1050569	19.0 Kg	16
2	1050570	COVER	1050570	7.0 Kg	17
2	1050571	CLAMP RING	1050571	6.4 Kg	18
1	1050811	SUPPORT, VENT PIPE	1050811	177.0 Kg	19
18	1049990	CLAMP, METAL HIGH PRESSURE	1049990	0.18 Kg	20
6	A22152-60605	HHCS, M20 X 60mm LG, C8.8	A22152	1.2 Kg	21
12	A22158-6	HARDENED WASHER, M20	A22158	0.24 Kg	22
6	A22154-65	HEX NUT, M20 C8	A22154	0.36 Kg	23
40	A22152-30255	HHCS, M10 X 25mm LG, C8.8	A22152	1.0 Kg	24
144	A22158-3	HARDENED WASHER, M10	A22158	0.58 Kg	25
72	A22154-35	HEX NUT, M10 C8	A22154	0.72 Kg	26
24	A22152-30305	HHCS, M10 X 30mm LG, C8.8	A22152	0.67 Kg	27
24	A22152-30355	HHCS, M10 X 35mm LG, C8.8	A22152	0.72 Kg	28
					29
					30

TRC P/N 1046725
VENTILATION ASSEMBLY, RH

SHT	REV
5	0
4	1
3	1
2	1
1	1

1

REV	DESCRIPTION	REVD BY / DATE	APP'D BY / DATE
1	REVISED SHEETS 1, 2, 3 & 4; ADDED ITEM 20 TO BOM & DWGS; ADD WT AT ITEM 16; ADD REV STATUS BLOCK;	LGL 8/21/12	J.H. 8/21/12

PROPRIETARY NOTICE
This information disclosed hereon, to the sole property of Robbins Company and is not to be used for any purpose not in connection with the business of the Company. By accepting this information, recipient agrees to not duplicate, disclose or transfer it to others, except as authorized in writing by the Company, under the conditions of such authorization. This material is not to be loaned and is to be returned to the Company upon request.

MACHINE	NEXT ASSY
EPB2016-376	1046701

UNLESS NOTED ALL DIMS ARE mm
TOLERANCES UNLESS NOTED

0-500	± 1.5
501-1500	± 3
1501-4000	± 6
4001+	± 12

X	± 1.5
.XX	± 1.0
.XXX	± .40
.XXXX	± .100
ANGLES	± 1
SURFACE FINISH	63

THIRD ANGLE PROJECTION
DIMENSIONS (XX) ARE REFERENCE
ALL GEOMETRIC DIMENSIONING & TOLERANCING PER ANSI Y14.5-2009

VENTILATION ASSEMBLY, RH

SIZE	DWG No.	REV	SHT	SCALE
D	1046725	1	1 of 5	1:50

DO NOT SCALE

DRAWN BY	CHECKED ENGINEER	CHECKED DESIGN	APPROVED BY
L.LANGEL	D.WILSON	D.WILSON	J.HEINEMAN
DATE 5/20/2012			DATE 8/4/2012

WEIGHT TOTAL 4907.0 Kg

Robbins

www.TheRobbinsCompany.com

1046725

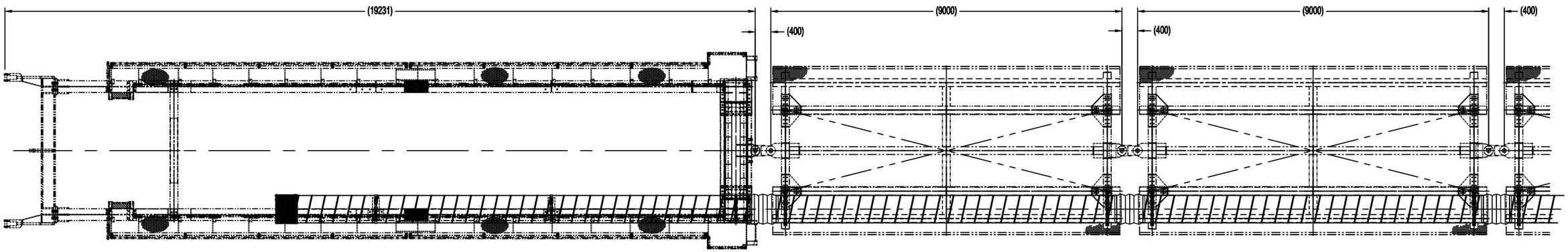

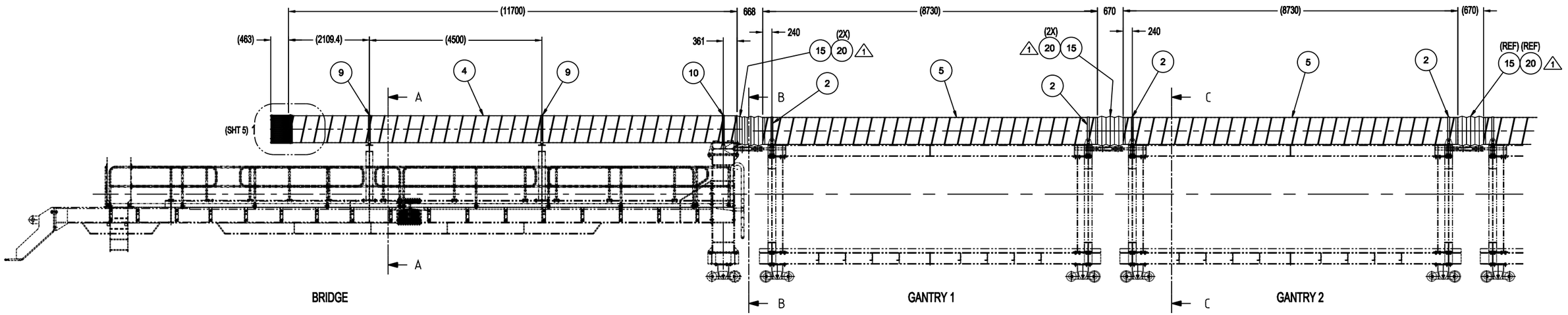

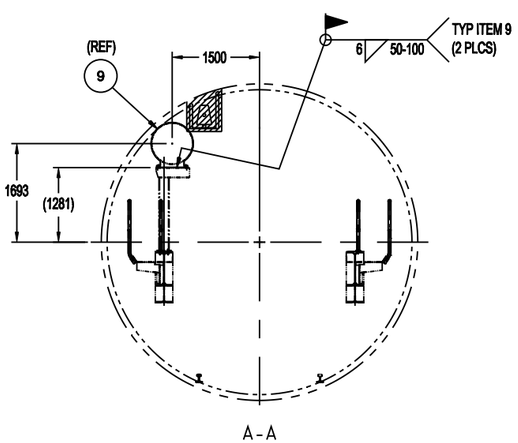

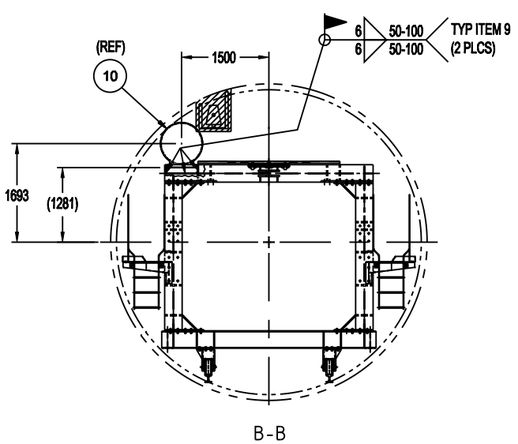

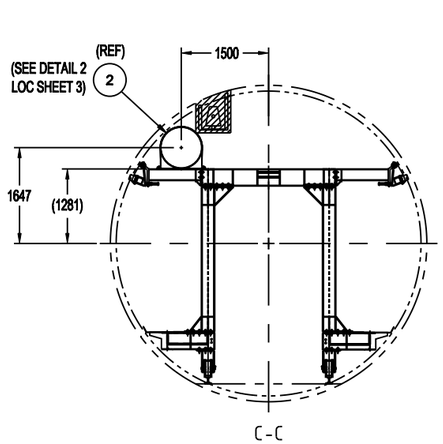

REV	DESCRIPTION	REVD BY/ DATE	APP'D BY/ DATE
1	ADDED ITEM 20 TO DWG;	LGL 8/21/12	J.H. 9/21/12

PROPRIETARY NOTICE
This information disclosed hereon, to the sole property of Robbins and is furnished in full or part, owned by or disclosed to any of its subsidiaries in full or part, owned by or disclosed to any of its affiliates, or owned by or disclosed to any of its joint ventures (collectively "Robbins") for any purpose whatsoever without the express written permission of Robbins, except as specifically authorized in writing by Robbins. By accepting this information, recipient agrees to hold it confidential and to use it only for the purpose for which it is supplied, and not to reproduce it in whole or in part, or to disclose it to others outside its own organization without the express written permission of Robbins, or to manufacture or have manufactured from it any machine or part of a machine, or to use it in any manner detrimental to the interest of Robbins. This material is on loan only, and is to be returned to Robbins upon demand. Unpublished rights reserved under the International Copyright Laws of Robbins.

MACHINE	NEXT ASSY
EPB2016-376	1046701

UNLESS NOTED ALL DIMS ARE mm
TOLERANCES UNLESS NOTED

0-500	± 1.5
500-1500	± 3
1500-6000	± 6
6000+	± 12

X	± 1.5
X.X	± 1.0
X.XX	± .40
X.XXX	± .100
ANGLES	± 1°
SURFACE FINISH	63

THIRD ANGLE PROJECTION
DIMENSIONS (X) ARE REFERENCE
ALL GEOMETRIC DIMENSIONING & TOLERANCING PER ANSI Y14.5-2009

VENTILATION ASSEMBLY, RH

SIZE D | DWG No. 1046725 | REV 1 | SHT 2 of 5 | SCALE 1:50 | DO NOT SCALE

DRAWN BY L.LANGEL DATE 5/20/2012
CHECKED BY/CHKD D.WILSON
CHECKED DESIGN D.WILSON
WEIGHT TOTAL 4907.0 Kg
APPROVED BY J.HEINEMAN DATE 9/4/2012

Robbins
www.TheRobbinsCompany.com

1046725

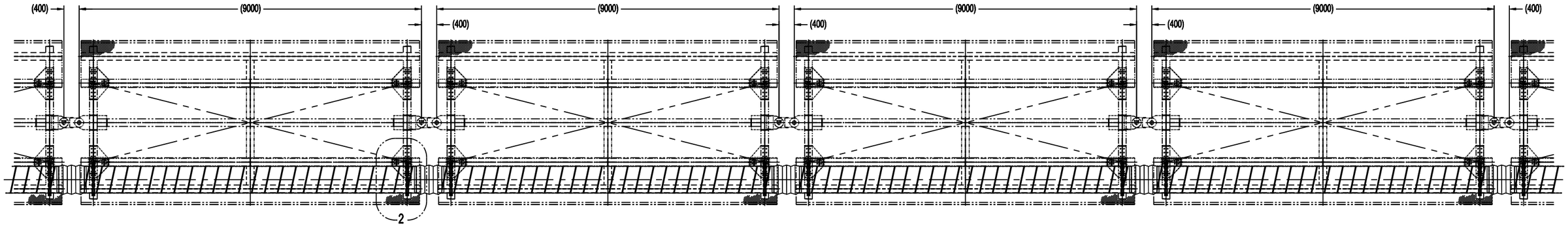

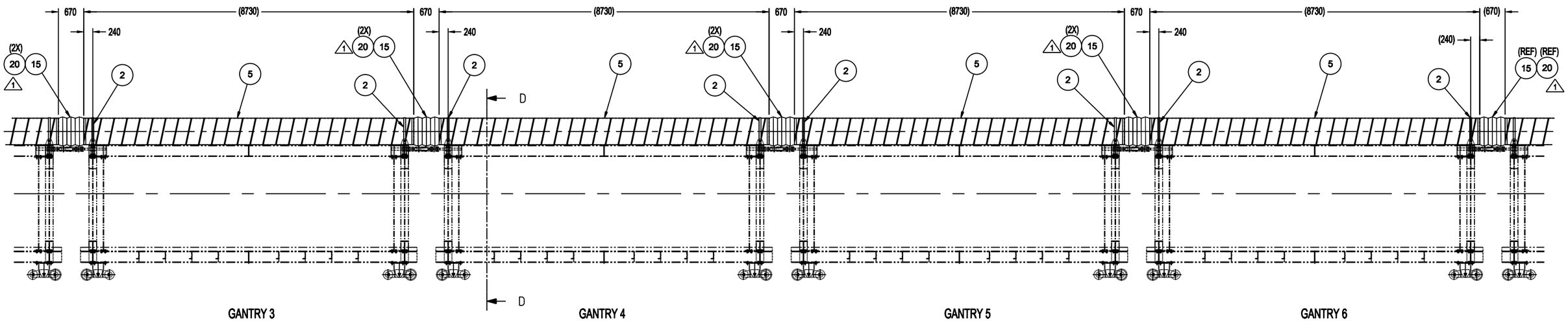

GANTRY 3 GANTRY 4 GANTRY 5 GANTRY 6

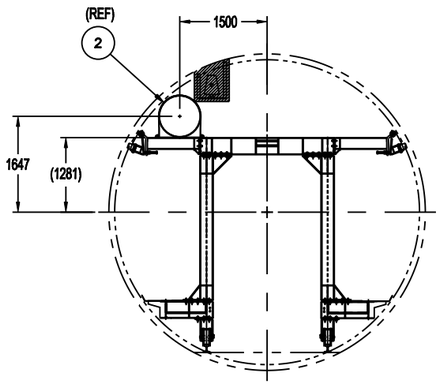

D-D
(TYP GANTRY'S 3, 4, 5 & 6)

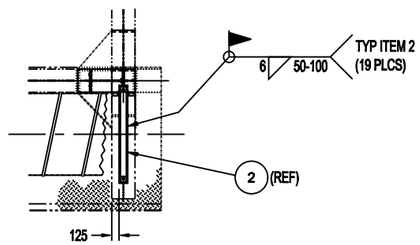

DETAIL 2
(TYP GANTRY'S 1 THRU 9)
(SCALE: 1:25)

REV	DESCRIPTION	REV'D BY DATE	APP'D BY DATE
1	ADDED ITEM 20 TO DWG;	LGL 8/21/12	J.H. 8/21/12

PROPRIETARY NOTICE
This information disclosed herein, is the sole property of The Robbins Company and may not be used, reproduced or disclosed in whole or in part, except by or disclosed to our employees having a need to know, without the express written permission of The Robbins Company. By accepting this information, recipient agrees to abide by the foregoing restrictions. Recipient further agrees to return this information upon request and to impose these same obligations upon any party to whom it may disclose or transfer this information. The Robbins Company

MACHINE	NEXT ASSY
EPB2016-376	1046701

UNLESS NOTED ALL DIMS ARE: mm
TOLERANCES UNLESS NOTED
0-300 ± 1.0
300-1500 ± 3
1500-4000 ± 6
4000+ ± 12
.XX ± 1.0
.XXX ± .40
.XXXX ± .100
ANGLES ± 1°
SURFACE FINISH
MACHINABLE PROJECTION
DIMENSIONS (X) ARE REFERENCE
ALL GEOMETRIC DIMENSIONING & TOLERANCING PER ANSI Y14.5-2009

TITLE
VENTILATION ASSEMBLY, RH

SIZE	DWG No.	REV	SHT	SCALE
D	1046725	1	3 of 5	1:50

DO NOT SCALE

DRAWN BY	CHECKED STANDARDS
L.LANGEL	D.WILSON
DATE	CHECKED DESIGN
6/20/2012	D.WILSON
WEIGHT TOTAL	APPROVED BY
4907.0 Kg	J.HEINEMAN
	DATE
	8/4/2012

Robbins
www.TheRobbinsCompany.com

1046725

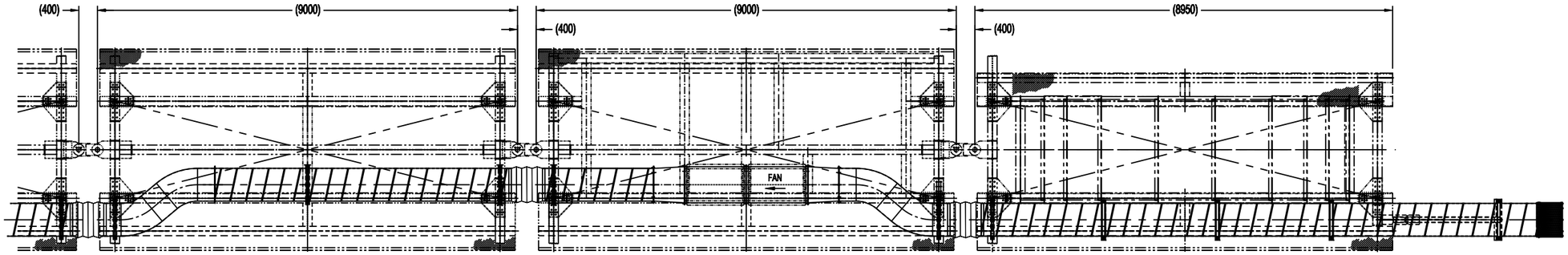

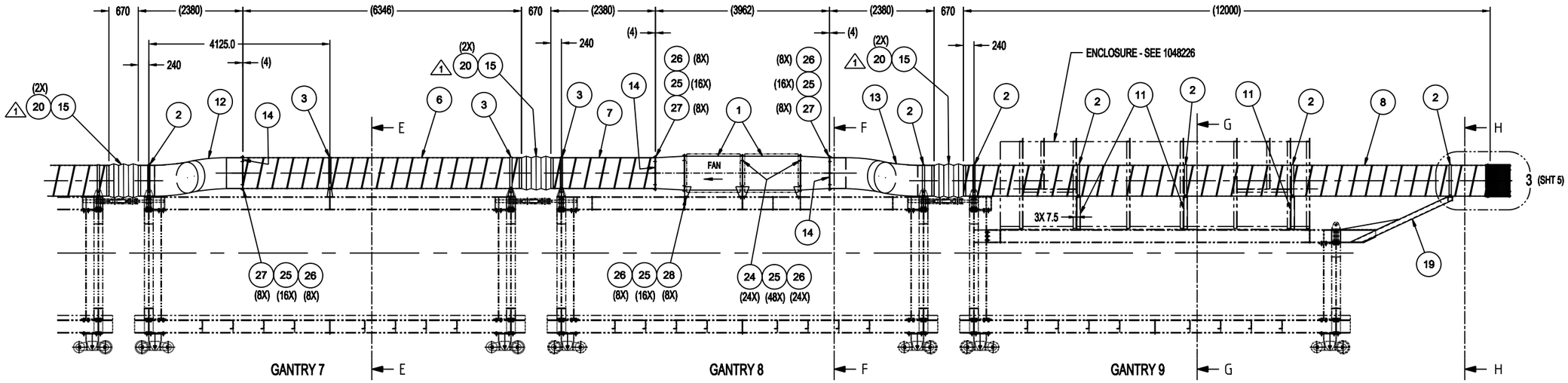

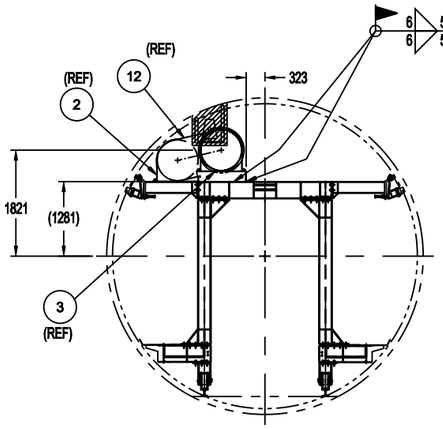

E-E

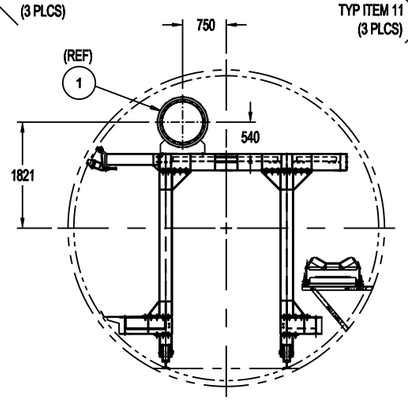

F-F

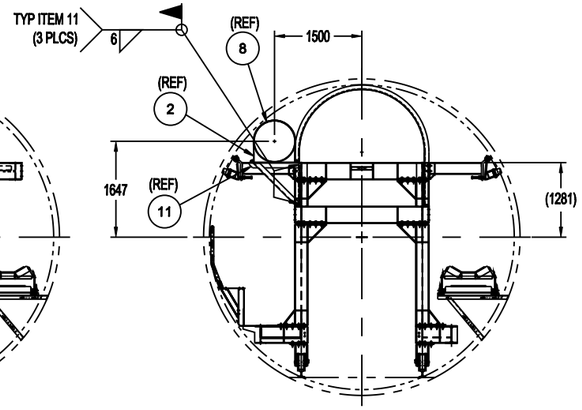

G-G

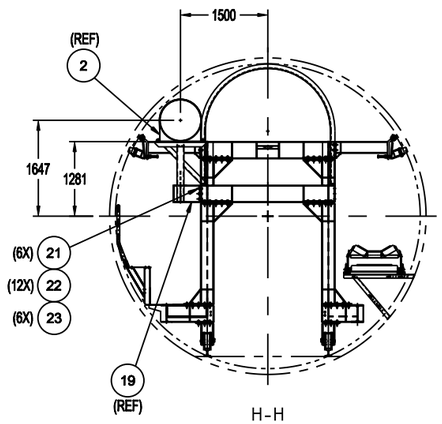

H-H

REV	DESCRIPTION	REVD BY/ DATE	APPD BY/ DATE
1	ADDED ITEM 20 TO DWG;	LGL 8/21/12	J.H. 8/21/12

TITLE: VENTILATION ASSEMBLY, RH

MACHINE	NEXT ASSY
EPB2016-376	1046701

UNLESS NOTED ALL DIMS ARE mm
TOLERANCES UNLESS NOTED
0-500 ± 1.5 | X ± 1.5
500-1000 ± 3 | XX ± .8
1000-4000 ± 6 | XXX ± .40
6000+ ± 12 | XXXX ± .100
THIRD ANGLE PROJECTION
DIMENSIONS (X) ARE REFERENCE
ALL GEOMETRIC DIMENSIONING & TOLERANCING PER ANSI Y14.5-2009

SIZE: D | DWG No.: 1046725 | REV: 1 | SHT: 4 OF 5 | SCALE: 1:50 | DO NOT SCALE

DRAWN BY: L.LANGEL | DATE: 6/20/2012
CHECKED BY/DATE: D.WILSON
CHECKED DESIGN: D.WILSON
WEIGHT TOTAL: 4907.0 Kg
APPROVED BY: J.HEINEMAN | DATE: 8/4/2012

Robbins
www.TheRobbinsCompany.com

PROPRIETARY NOTICE
The information disclosed hereon, to the sole property of and the subject matter of copyright of The Robbins Company. By accepting this information, recipient agrees to use it only for the purpose for which it is supplied and to return it on demand. This material is not to be reproduced, copied, disclosed to others or used in any manner detrimental to the interests of The Robbins Company in whole or in part without the written permission of The Robbins Company.

1046725

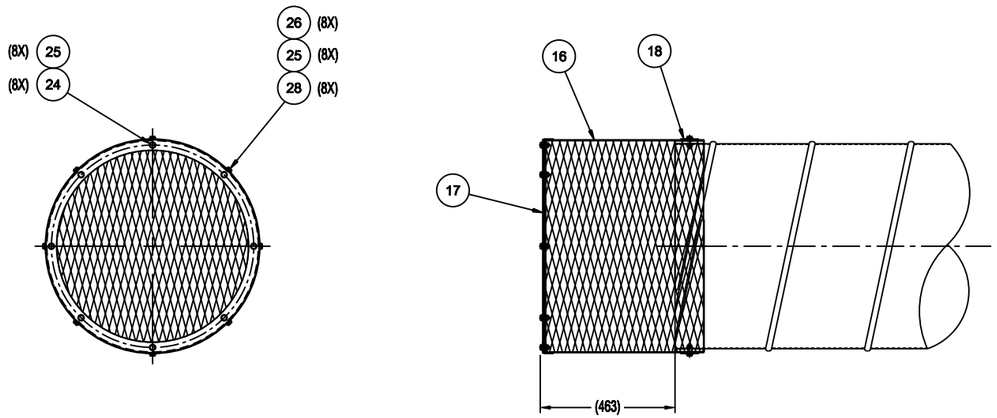

DETAIL 1
(SCALE: 1:10)
(LOCATED FROM SHT 2)

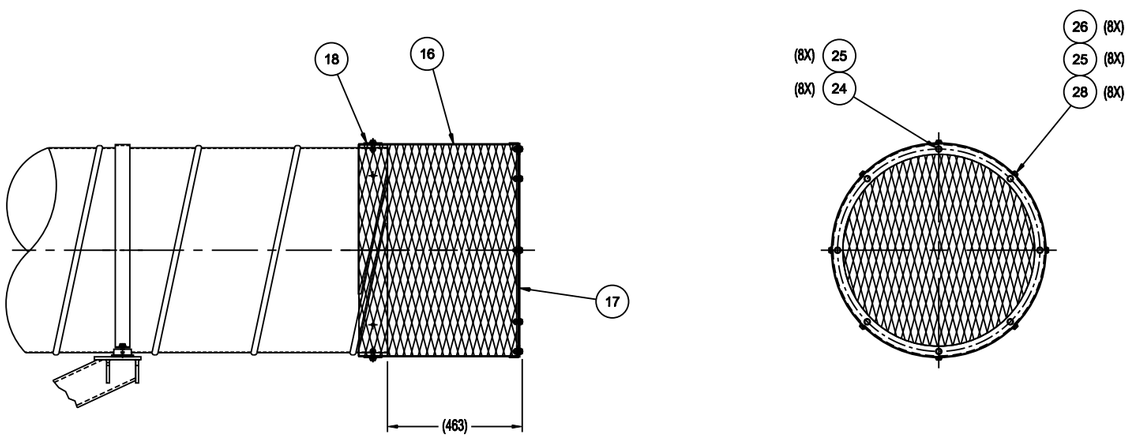

DETAIL 3
(SCALE: 1:10)
(LOCATED FROM SHT 4)

PROPRIETARY NOTICE
This information disclosed herein, is the sole property of The Robbins Company and is not to be copied, or used for the purpose of sale or other use, in whole or in part, without the prior written consent of The Robbins Company. By accepting this information, recipient agrees to abide by the foregoing, without any modification or alteration of the conditions. This material is not to be copied, and is to be returned upon request to The Robbins Company.

MACHINE	NEXT ASSY
EPB2016-376	1046701

UNLESS NOTED ALL DIMS ARE mm
TOLERANCES UNLESS NOTED
0-300 ± 1.5
300-1500 ± 3
1500-6000 ± 6
6000+ ± 12
MACHINING (mm)
X ± 1.5
X.X ± 1.0
X.XX ± .40
X.XXX ± .100
ANGLES ± 1
SURFACE FINISH 1.5
TRANSVERSE PROJECTION
DIMENSIONS (X) ARE REFERENCE
ALL GEOMETRIC DIMENSIONING & TOLERANCING PER ANSI Y14.5-2009

REV	DESCRIPTION	REV'D BY/ DATE	APP'D BY/ DATE

TITLE
VENTILATION ASSEMBLY, RH

SIZE	DWG No.	REV	SHT	SCALE
D	1046725	0	5 OF 5	1:50

DO NOT SCALE

DRAWN BY: L.LANGEL
DATE: 6/20/2012
CHECKED STANDARDS: D.WILSON
CHECKED DESIGN: D.WILSON
WEIGHT TOTAL: 4907.0 Kg
APPROVED BY: J.HEINEMAN
DATE: 8/4/2012

Robbins

www.TheRobbinsCompany.com

1046725

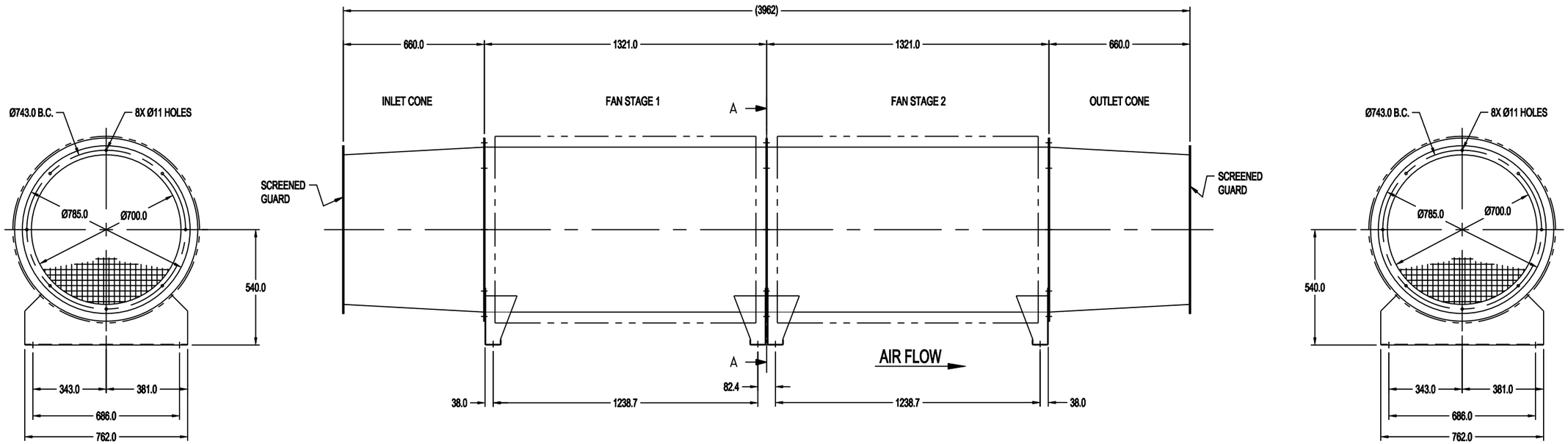

TRC P/N 1047227
VENTILATION FAN

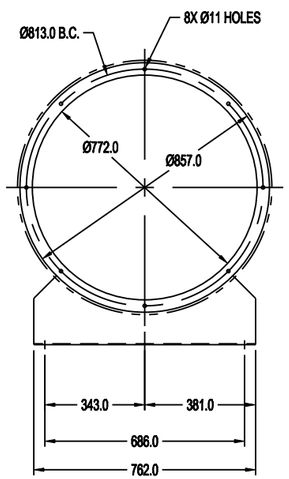

A - A
(TYP BOTH ENDS OF FAN)

1. FAN ASSEMBLY SPECIFICATIONS:

   - DUAL STAGE VANE AXIAL FANS
   - TYPE: VADS-30F21
   - CAPACITY: 25,000 CFM @ 15" WG PRESSURE
   - 2X 60 HP (45 kw), 460VAC/60 Hz, 3500 RPM EXPLOSION PROOF MOTOR
   - HCH BRACKETS & BASE FOR FLOOR MOUNT.
   - FANS TO INCLUDE STEEL SCREENED GUARDS AT BOTH INLET AND OUTLET,
   - INSULATED SOUND TRAP HOUSINGS

2. ELECTRICAL REQUIREMENTS:

   - SUPPLY POWER: 460VAC, 60 Hz, 3 Phase. ALL CONTROL POWER DEVELOPED INTERNALLY
   - INCLUDES CIRCUIT BREAKERS WITH EXTERNAL OPERATOR, AND SOFT START FOR FORWARD / REVERSE OPERATION
   - LOCAL START / STOP FOR FORWARD / REVERSE OPERATION
   - REMOTE OPERATION VIA DRY CONTACT CLOSURE FOR FORWARD OPERATION ONLY
   - ALL EQUIPMENT TO BE Class 1, Division 1 EXPLOSION PROOF

3. VENDOR TO SUPPLY TRC WITH A TOTAL WEIGHT AND A LIST OF SPARE PARTS.

4. VENDOR TO SUBMIT A CERTIFIED DRAWING TO TRC FOR ENGINEERING APPROVAL.

5. VENDOR: "ABC VENTILATION SYSTEMS"

PROPRIETARY NOTICE
This information disclosed hereon, in the sole property of The Robbins Company. By accepting this information, recipient agrees not to duplicate or use, except for the purpose for which it is furnished, or to disclose to others, any information contained herein without the written consent of The Robbins Company. By accepting this information, recipient agrees to return it upon request of The Robbins Company. This drawing is to be used only in accordance with the terms and conditions of the agreement or purchase order to which it is attached. This drawing is not to be copied, and is to be returned upon completion of the work for which it is loaned to the recipient. © 2012 The Robbins Company

MACHINE	NEXT ASSY
EP82016-376	1046725
EP82016-377	1046726

UNLESS NOTED ALL DIMS ARE mm
TOLERANCES UNLESS NOTED
0-500 ± 1.5
500-1000 ± 3
1500-6000 ± 6
6000+ ± 12
DIMENSIONS DO ARE REFERENCE
ALL GEOMETRIC DIMENSIONING & TOLERANCING PER ANSI Y14.5-2009

REV	DESCRIPTION	REVD BY / DATE	APPD BY / DATE

TITLE: VENTILATION FAN
SIZE: D | DWG No.: 1047227 | REV: 0 | SHT: 1 of 1 | SCALE: 1:10
DO NOT SCALE
DRAWN BY: L.LANGEL | DATE: 4/9/2012
CHECKED BY/ENGINEER: D.WILSON
CHECKED DESIGN: D.WILSON
APPROVED BY: J.HEINEMAN | DATE: 4/11/2012
WEIGHT TOTAL:
Robbins
www.TheRobbinsCompany.com

1047227

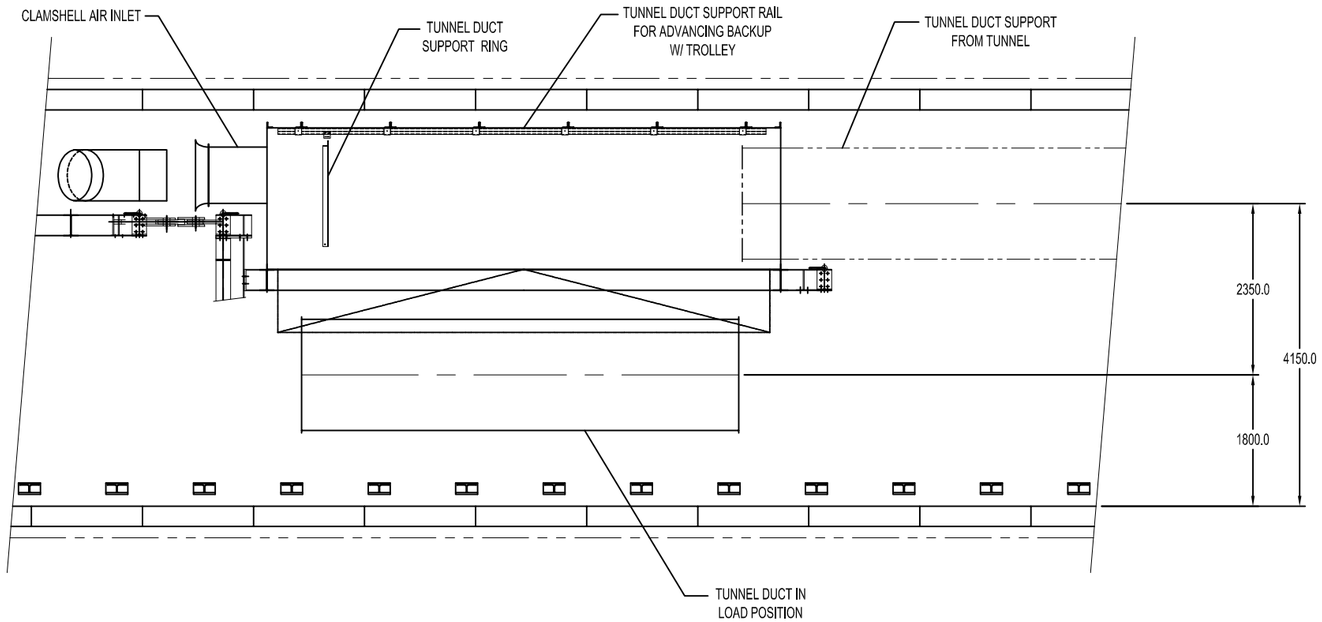

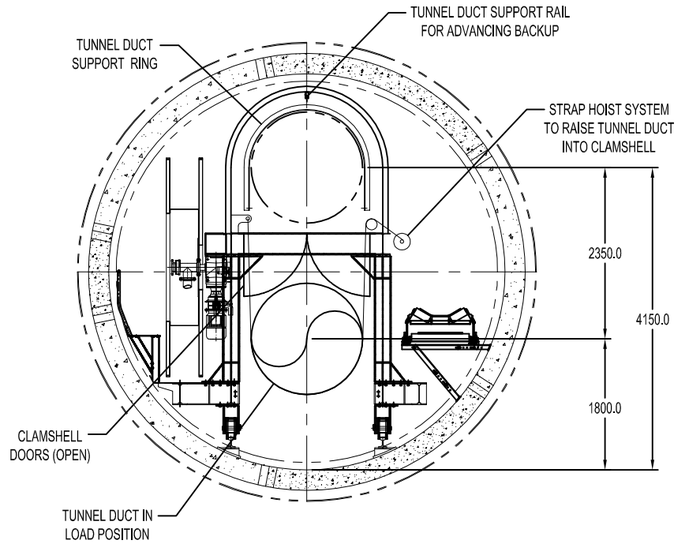

LOAD POSITION

PROPRIETARY NOTICE
This information is the property of The Robbins Company, and may not be copied or used in any way without the written consent of The Robbins Company, and remains their sole property. It is not to be disclosed to, loaned or copied by any other party without prior written consent of The Robbins Company. Outside of the agreed use, any use of this information, in whole or in part, is at the recipient's own risk and The Robbins Company shall be free of any claims arising therefrom. This notice shall be included on any reproduction hereof, in whole or in part, and is not to be removed therefrom.

MACHINE	NEXT ASSY

UNLESS NOTED ALL DIMS ARE mm
TOLERANCES UNLESS NOTED
FRACTIONS: 0-300 ± 1.5; 300-1500 ± 3; 1500-6000 ± 6; 6000+ ± 12
MACHINING (mm): X ± 1.5; X.X ± 1.0; X.XX ± .40; X.XXX ± .100
THIRD ANGLE PROJECTION
ANGLES ± 1°; SURFACE FINISH 125
DIMENSIONS (X) ARE REFERENCE
ALL GEOMETRIC DIMENSIONING & TOLERANCING PER ANSI Y14.5-2009

REV	DESCRIPTION	REV'D BY / DATE	APP'D BY / DATE

TITLE: CLAMSHELL DUCT EXTENDER LOAD POSITION

SIZE: D | DWG No. | REV: 0 | SHT 1 OF 3 | SCALE: 1:40 | DO NOT SCALE

DRAWN BY: D.WILSON | DATE: 4-26-12 | CHECKED STANDARDS | CHECKED DESIGN | WEIGHT TOTAL | APPROVED BY | DATE

Robbins

www.TheRobbinsCompany.com

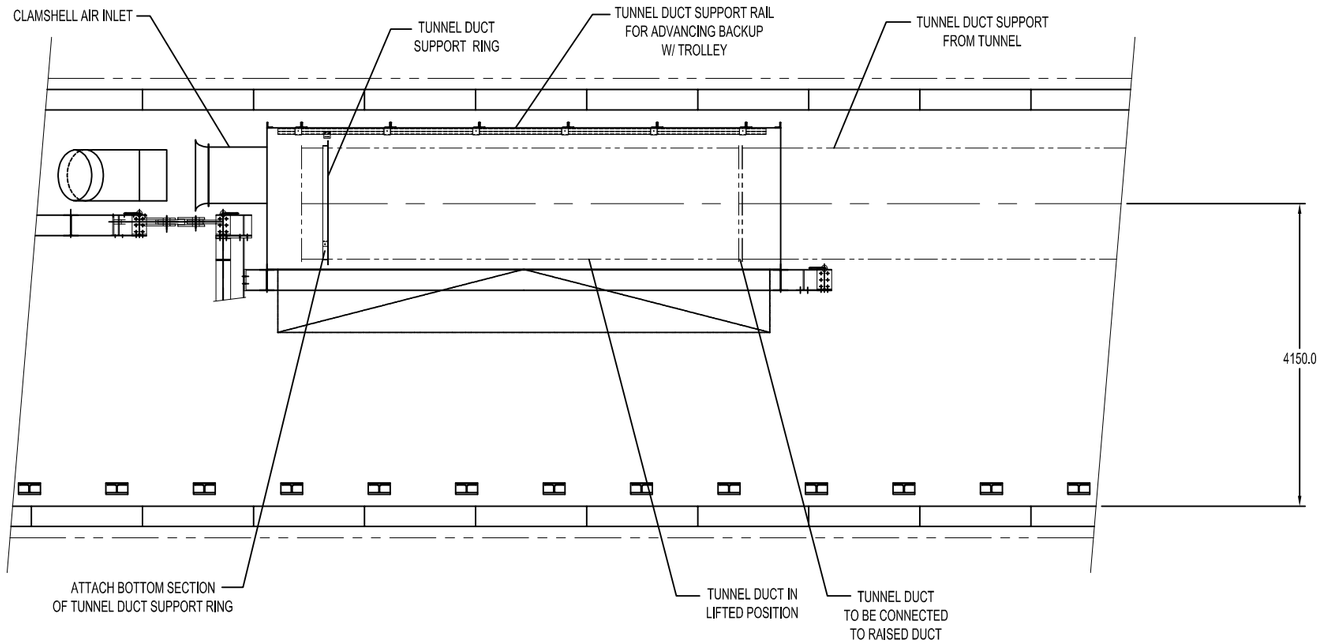

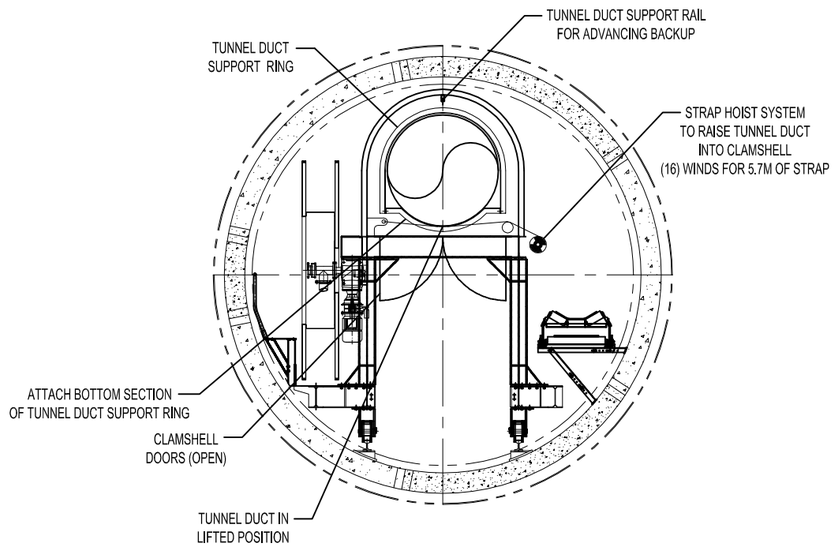

LIFTED POSITION

PROPRIETARY NOTICE
The information and design contained herein is the property of The Robbins Company, and remains that sole property. It shall not be loaned, copied or used in whole or part for any purpose detrimental to the interests of The Robbins Company without prior written consent of The Robbins Company. Any such loan, copy or use shall be returned to The Robbins Company upon request. The recipient, by receiving this drawing, agrees to abide by the terms stated herein.

MACHINE	NEXT ASSY

UNLESS NOTED ALL DIMS ARE mm

TOLERANCES UNLESS NOTED

FRACTIONS	DECIMALS	ANGLES
0-300 ± 1.5	X ± 1.5	
300-1500 ± 3	X.X ± 1.0	
1500-6000 ± 6	X.XX ± .40	
6000+ ± 12	X.XXX ± .100	
THIRD ANGLE PROJECTION	MACHINING finish	ANGLES ± 1°
		BLANKFACE 1/2°

DIMENSIONS DO ARE REFERENCE.
ALL GEOMETRIC DIMENSIONING & TOLERANCING PER ANSI Y14.5-2009

REV.	DESCRIPTION	REV'D BY / DATE	APP'D BY / DATE

TITLE: CLAMSHELL DUCT EXTENDER LIFTED POSITION

SIZE: D | DWG No. | REV: 0 | SHT 2 OF 3 | SCALE: 1:40 | DO NOT SCALE

DRAWN BY: D.WILSON | DATE: 4-26-12 | CHECKED STANDARDS | CHECKED DESIGN | WEIGHT TOTAL | APPROVED BY | DATE

Robbins

www.TheRobbinsCompany.com

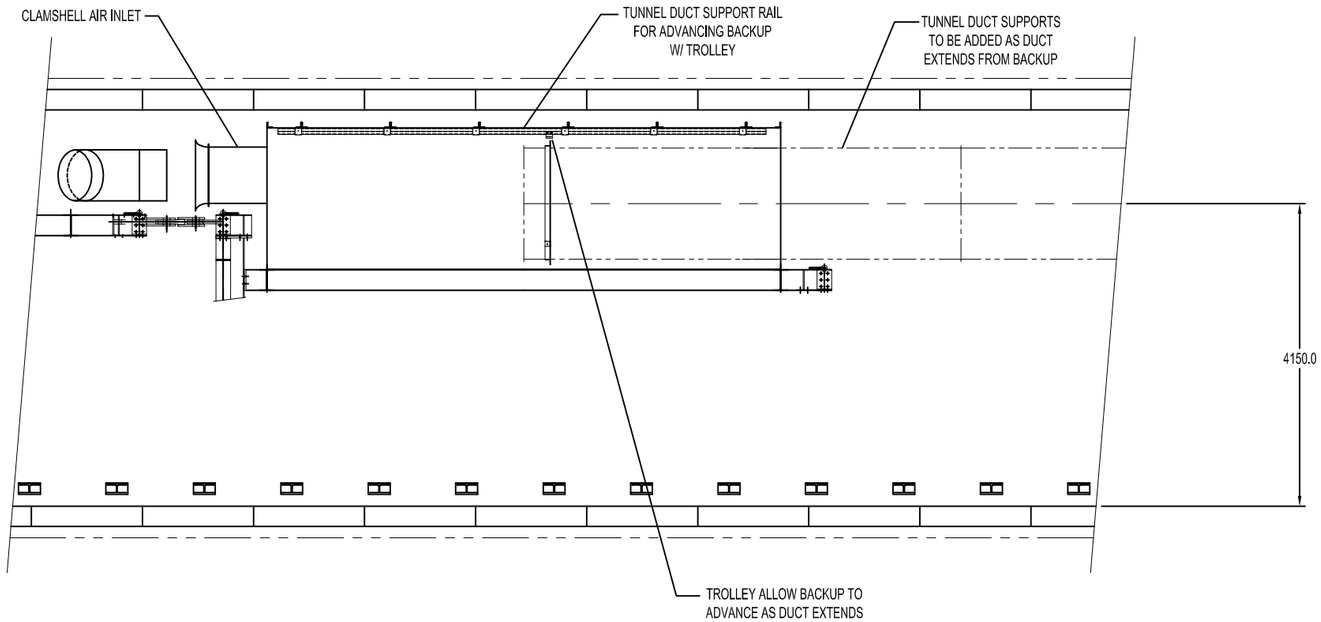

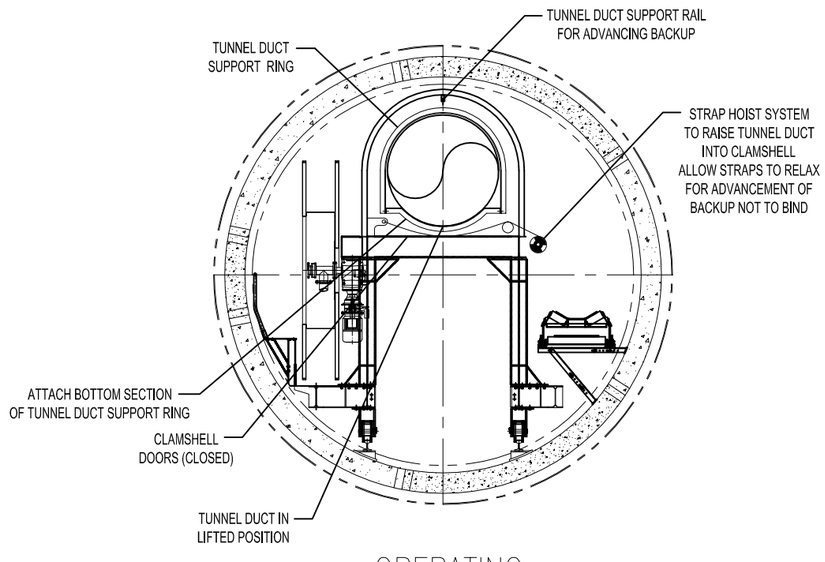

OPERATING

PROPRIETARY NOTICE
The information disclosed herein is the property of The Robbins Company, and remains their sole property. It shall not be copied, used or disclosed to others in whole or in part without prior written consent of The Robbins Company. Any copies of this drawing made by any method must also bear a copy of this notice. Any modifications to this drawing must be noted in revision block. Recipient agrees to turn returned upon request to The Robbins Company.

MACHINE	NEXT ASSY

UNLESS NOTED ALL DIMS ARE mm

TOLERANCES UNLESS NOTED

FRACTIONS	MACHINING (mm)		
0-300	± 1.5	X	± 1.5
300-1500	± 3	X.X	± 1.0
1500-6000	± 6	X.XX	± .40
6000+	± 12	X.XXX	± .100
THIRD ANGLE PROJECTION		ANGLES	± 1°
		SURFACE FINISH	125

DIMENSIONS (R) ARE REFERENCE

ALL GEOMETRIC DIMENSIONING & TOLERANCING PER ANSI Y14.5-2009

REV	DESCRIPTION	REV'D BY/ DATE	APP'D BY/ DATE

TITLE: CLAMSHELL DUCT EXTENDER OPERATION POSITION

SIZE	DWG No.	REV	SHT	SCALE
D		0	3 OF 3	1:40

DO NOT SCALE

DRAWN BY: D.WILSON
DATE: 4-26-12
CHECKED STANDARDS
CHECKED DESIGN
WEIGHT TOTAL:
APPROVED BY
DATE

Robbins

www.TheRobbinsCompany.com

QTY	PART No.	DESCRIPTION	DWG No.	WT. Total	ITEM
1	D123247-1	CONVEYOR TAIL END ASSEMBLY	D123247	4975.0 Kg	1
1	1046405	WEIGHING CONVEYOR ASSEMBLY	1046405	1844.0 Kg	2
1	1046406	CONVEYOR FRAME ASSEMBLY - FRONT	1046406	3330.0 Kg	3
2	1046407	CONVEYOR FRAME ASSEMBLY - CENTER	1046407	3372.0 Kg	4
1	1046408	CONVEYOR HEAD ASSEMBLY	1046408	3619.5 Kg	5
3	D118795-1	PIN, CONVEYOR	D118795	5.7 Kg	6
5	C123121-1	PIN, CONVEYOR PIVOT	C123121	18.5 Kg	7
3	A22152-40305	HHCS, M12 X 30mm LG	A22152	.12 Kg	8
3	A22158-4	WASHER, HARDENED M12	A22158	.04 Kg	9
184. M	1000635	CONVEYOR BELT	1000607	2024.0 Kg	10
1	5750000446	TOOLS, BELT SPLICING	5750000446	-	11
1	A115400-1	RS COMPONENTS ROPE TENSIONING KIT	A115400	-	12
2	1048217	E-STOP, CABLE PULL EXPLOSION PROOF 2	1048217	-	13
1	B119820-1	BELT SLIP SWITCH INSTALLATION	B119820	1.1 Kg	14
					15

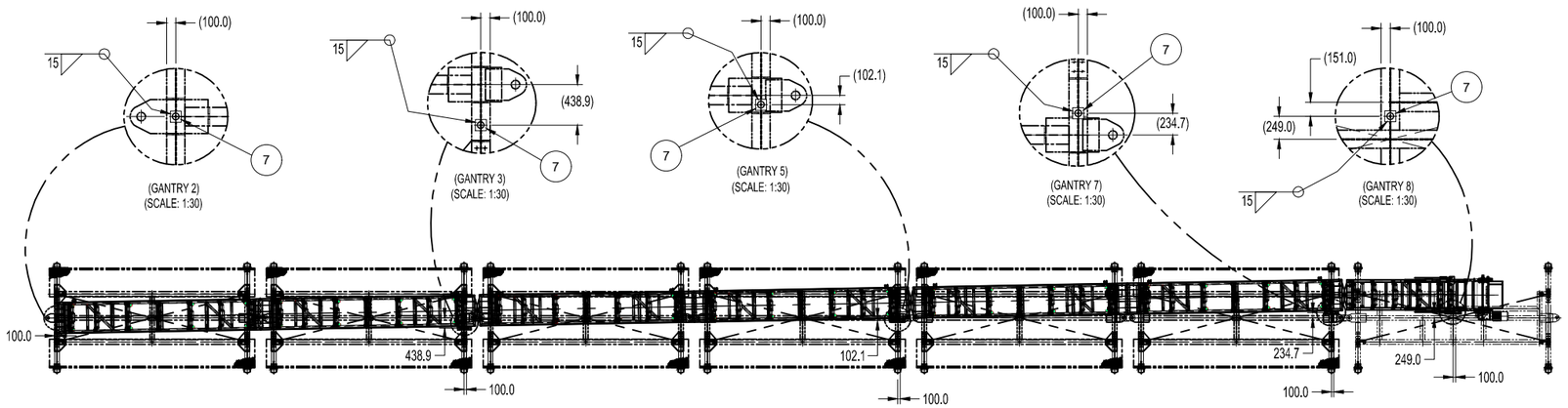

A - A

CONVEYOR PIVOT PIN INSTALLATION

- PLAN VIEW -

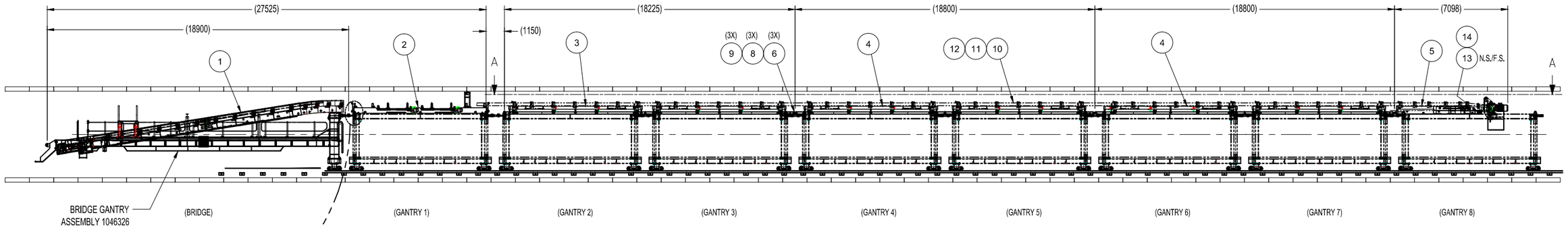

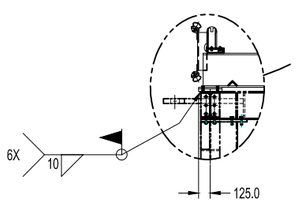

TRC P/N 1046723
BELT CONVEYOR ASSEMBLY, RH

NOTES:

1. TORQUE FASTENERS PER ROBBINS DRAWING 5750 9900 17.
2. INSTALL E-STOP, CABLE PULL (ITEM 13) PER MANUFACTURER'S INSTRUCTIONS.

PROPRIETARY NOTICE: This information disclosed hereon, in the sole property of The Robbins Company and shall not be reproduced in whole or in part, used by, or disclosed to any not-authorized in full or part, used by, or disclosed to any Company. By accepting this information, recipient agrees to keep it confidential and not to reproduce or disclose it to others without the prior written permission of The Robbins Company. This material is to be returned upon request.

REV.	DESCRIPTION	REV'D BY/ DATE	APP'D BY/ DATE

TITLE: BELT CONVEYOR ASSEMBLY, RH

MACHINE	NEXT ASSY
EPB2016-376	1046701

UNLESS NOTED ALL DIMS ARE mm / TOLERANCES UNLESS NOTED

0-300	± 1.5	X	± 1.5
300-1500	± 3	X.X	± 1.0
1500-6000	± 6	X.XX	± .40
6000<	± 12	X.XXX	± .100
		ANGLES	± 1°
		SURFACE FINISH	125

DIMENSIONS (XX) ARE REFERENCE

ALL GEOMETRIC DIMENSIONING & TOLERANCING PER ANSI Y14.5-2009

SIZE: D | DWG NO.: 1046723 | REV: 0 | SHT 1 OF 1 | SCALE: 1:120

DO NOT SCALE

DRAWN BY: L.LANGEL | DATE: 4/10/2012

CHECKED BY/DATE: D.WILSON

CHECKED BY/DATE: D.WILSON

APPROVED BY: J.HEINEMAN | DATE: 06/05/2012

WEIGHT TOTAL: 19,190.0 Kg

Robbins

www.TheRobbinsCompany.com

1046723

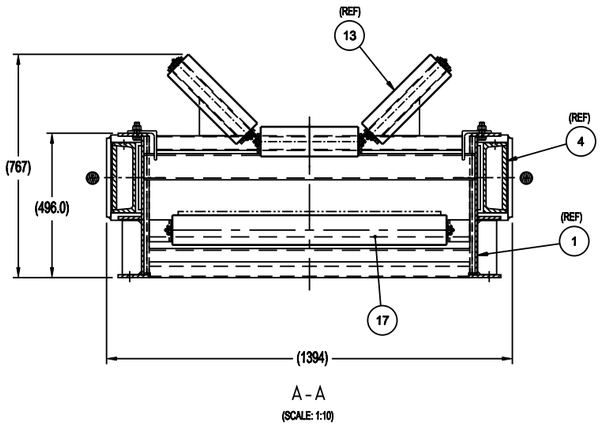

A - A
(SCALE: 1:10)

QTY	PART No.	DESCRIPTION	DWG No.	WT. Total	ITEM
1	A22152-71805	HHCS, M24 X 180mm LG, C8.8	A22152	.73 Kg	21
4	A22153-71109	SHCS, M24 X 110mm LG, C12.9	A22153	2.16 Kg	22
5	A22158-7	WASHER, HARDENED M24	A22158	.35 Kg	23
5	A22154-75	HEX NUT, PLAIN M24, C8	A22154	1.20 Kg	24
4	A22153-50409	SHCS, M16 X 40mm LG, C12.9	A22153	.36 Kg	25
20	A22152-50505	HHCS, M16 X 50mm LG, C8.8	A22152	2.0 Kg	26
4	A22153-50659	SHCS, M16 X 65mm LG, C12.9	A22153	.52 Kg	27
48	A22158-5	WASHER, HARDENED M16	A22158	.48 Kg	28
24	A22154-55	HEX NUT, PLAIN M16, C8	A22154	.72 Kg	29
12	634-073	BEVEL WASHER, METRIC M16	-	.18 Kg	30
8	A22152-40605	HHCS, M12 X 60mm LG, C8.8	A22152	.48 Kg	31
16	A22158-4	WASHER, HARDENED M12	A22158	.10 Kg	32
8	A22154-45	HEX NUT, PLAIN M12, C8	A22154	.16 Kg	33
4	A22151-50905	HHCS, M16 X 90mm LG, C8.8	A22151	.64 Kg	34
4	A22151-51305	HHCS, M16 X 130mm LG, C8.8	A22151	.84 Kg	35

QTY	PART No.	DESCRIPTION	DWG No.	WT. Total	ITEM
1	1046409	FIXED HEAD FRAME	1046409	910.0 Kg	1
1	D115300-1	DRIVE DRUM	D115300	300.0 Kg EST	2
1	D115301-1	HEAD END SNUB DRUM	D115301	40.0 Kg EST	3
1	D123049-1	CONVEYOR HEAD FRAME	D123049	740.0 Kg	4
2	D115333-1	TENSION SCREW (M42)	D115333	34.6 Kg	5
1	A115396-1	CONVEYOR DRIVE	A115396	544.8 Kg	6
1	A115397-1	PRIMARY SCRAPER	A115397	20.0 Kg EST	7
2	A115401-1	DRIVE DRUM BEARINGS	A115401	38.0 Kg	8
2	A115403-1	SNUB DRUM BEARINGS	A115403	9.6 Kg	9
1	D120134-36S	SECONDARY SCRAPER	D120134	63.5 Kg	10
1	1047366	DUMP CHUTE, CONVEYOR HEAD, RH	1047366	618.0 Kg	11
1	D122969-1	CONVEYOR PIVOTING CARRYING IDLER	D122969	42.0 Kg	12
3	D122971-1	CONVEYOR STANDARD CARRYING IDLER	D122971	90.0 Kg	13
1	D123153-1	CONVEYOR CARRYING IDLER	D123153	28.5 Kg	14
1	D123155-1	CONVEYOR CARRYING IDLER	D123155	30.5 Kg	15
1	D123167-1	CONVEYOR CARRYING IDLER	D123167	30.5 Kg	16
2	D81747-2	RETURN IDLER	D81747	29.0 Kg	17
2	B115304-1	HEAD DRUM PACK	B115304	18.0 Kg	18
2	B123119-1	HEAD SNUB SHIM PACK	B123119	6.0 Kg	19
12	B123120-1	SPACER, IDLER ROLLER	B123120	15.6 Kg	20

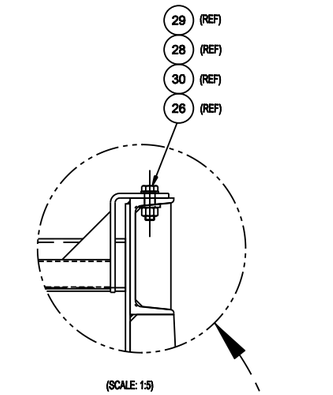

(SCALE: 1:5)

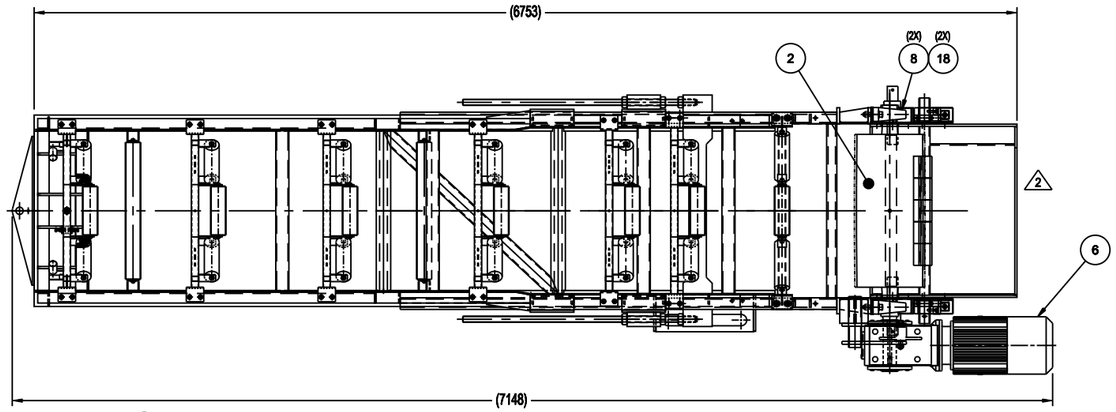

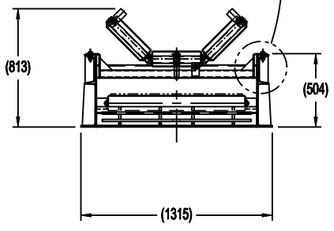

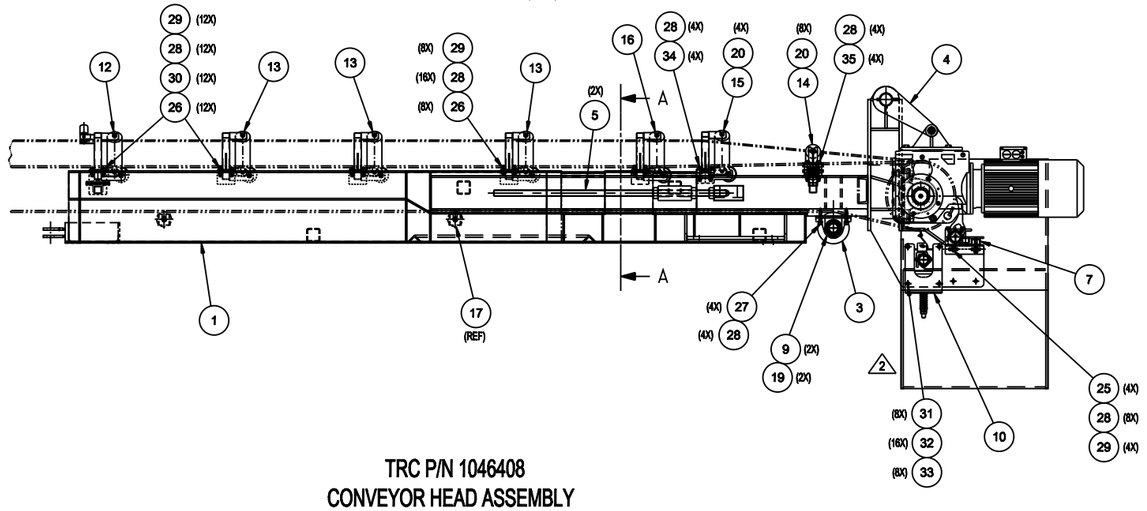

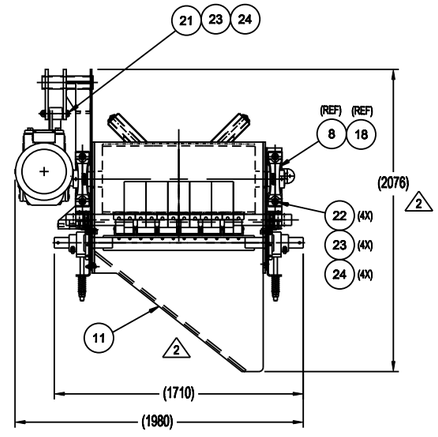

NOTE:

1. TORQUE FASTENERS PER ROBBINS DRAWING 5750 9900 17.

TRC P/N 1046408
CONVEYOR HEAD ASSEMBLY

REV	DESCRIPTION	REVD BY/ DATE	APPD BY/ DATE
2	ADD DUMP CHUTE ITEM 11; DIM (2076) WAS (2015); REV WEIGHT 3819.5 Kg WAS 3,001.5 Kg	LGL 4/13/12	J.H. 4/13/12
1	ITEM 10: P/N WAS D120134-36S; ITEM 27: P/N WAS A22153-50655;	LGL 4/10/12	J.H. 4/10/12

TITLE: CONVEYOR HEAD ASSEMBLY, RH

MACHINE	NEXT ASSY
EPB2016-376	1046723

UNLESS NOTED ALL DIMS ARE mm
TOLERANCES UNLESS NOTED
0-300 ± 1.5 | 300-1000 ± .5 | 1000-4000 ± 0 | 4000+ ± 12
X ± 1.5 | .XX ± 1.0 | .XXX ± .50 | .XXXX ± .100 | ANGLES ± 1° | SURFACE FINISH 63
DIMENSIONS (X) ARE REFERENCE
ALL GEOMETRIC DIMENSIONING & TOLERANCING PER ANSI Y14.5-2009

SIZE D | DWG No. 1046408 | REV 2 | SHT 1 of 1 | SCALE 1:20 | DO NOT SCALE
DRAWN BY L.LANGEL | DATE 2/20/2012
CHECKED BY/ENGINEER R.FINE | CHECKED DESIGN D.WILSON
WEIGHT TOTAL 3,619.5 Kg | APPROVED BY J.HEINEMAN | DATE 4/4/2012

Robbins
www.TheRobbinsCompany.com

1046408

PROPRIETARY NOTICE
The information disclosed hereon is the sole property of The Robbins Company and may not be used, reproduced or disclosed to others except as specifically authorized in writing by The Robbins Company. The recipient agrees to maintain this information in confidence and not reproduce or otherwise disclose it to any person, except to its own employees who need to know its contents for the purpose for which it was delivered. It should be returned promptly to The Robbins Company upon request.

QTY	PART No.	DESCRIPTION	DWG No.	WT. Total	ITEM
1	1046412	CONVEYOR BASE FRAME - FWD	1046412	724.0 Kg	1
1	1046411	CONVEYOR BASE FRAME - AFT	1046411	734.0 Kg	2
2	D123123-1	CONVEYOR TILTING FRAME	D123123	1106.0 Kg	3
2	B390042-1	IDLER SHIM SET	B390042	2.0 Kg	4
4	B115506-1	JACK SCREW	B115506	14.0 Kg	5
4	A115503-1	RETAINING PIN	A115503	12.8 Kg	6
4	A115504-1	ADJUSTING PIN	A115504	12.8 Kg	7
6	A115505-1	PIVOT PIN ASSEMBLY	A115505	2.1 Kg	8
16	B115900-1	GUIDE ROLLER	B115900	49.6 Kg	9
10	D122971-1	CONVEYOR STANDARD CARRYING IDLER	D122971	300.0 Kg	10
4	D122969-1	CONVEYOR PIVOTING CARRYING IDLER	D122969	168.0 Kg	11
8	D122967-1	CONVEYOR V RETURN IDLER	D122967	224.0 Kg	12
					13
88	634-073	BEVEL WASHER, METRIC M16	-	1.32 Kg	14
88	A22152-50505	HHCS, M16 X 50 mm LG, C8.8	A22152	8.8 Kg	15
88	A22154-55	HEX NUT, PLAIN M16, C8	A22154	2.64 Kg	16
88	A22158-5	WASHER, HARDENED M16	A22158	.88 Kg	17
10	A22152-60555	HHCS, M20 X 55 mm LG, C8.8	A22152	4.0 Kg	18
42	A22154-65	HEX NUT, PLAIN M20, C8	A22154	2.52 Kg	19
84	A22158-6	WASHER, HARDENED M20	A22158	1.68 Kg	20

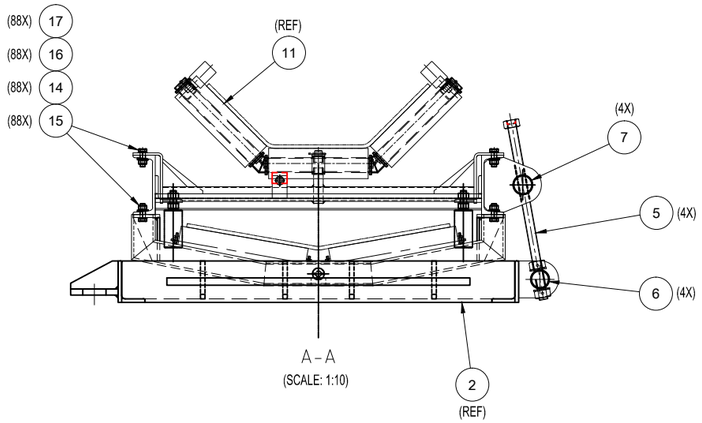

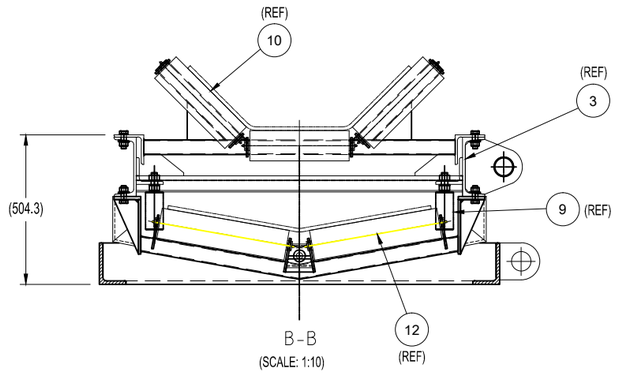

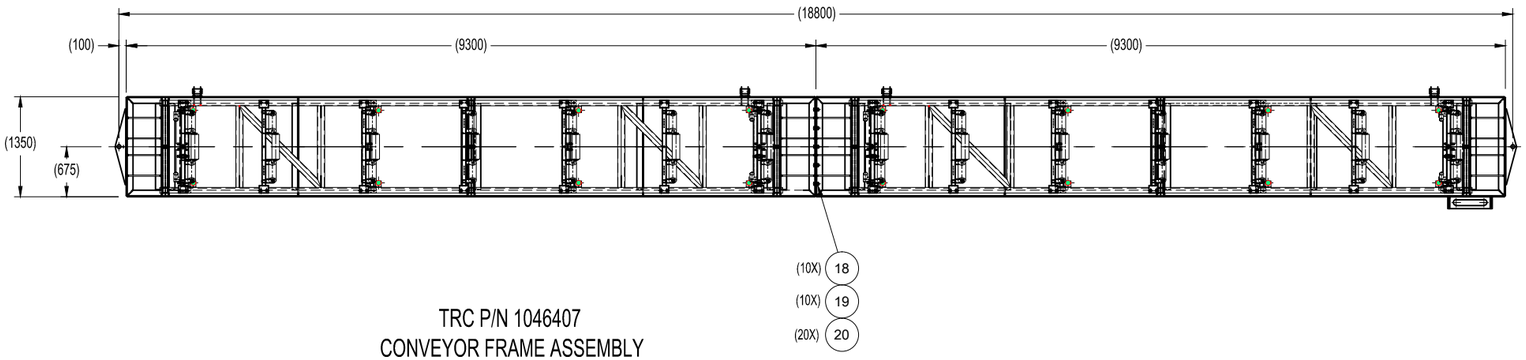

TRC P/N 1046407
CONVEYOR FRAME ASSEMBLY

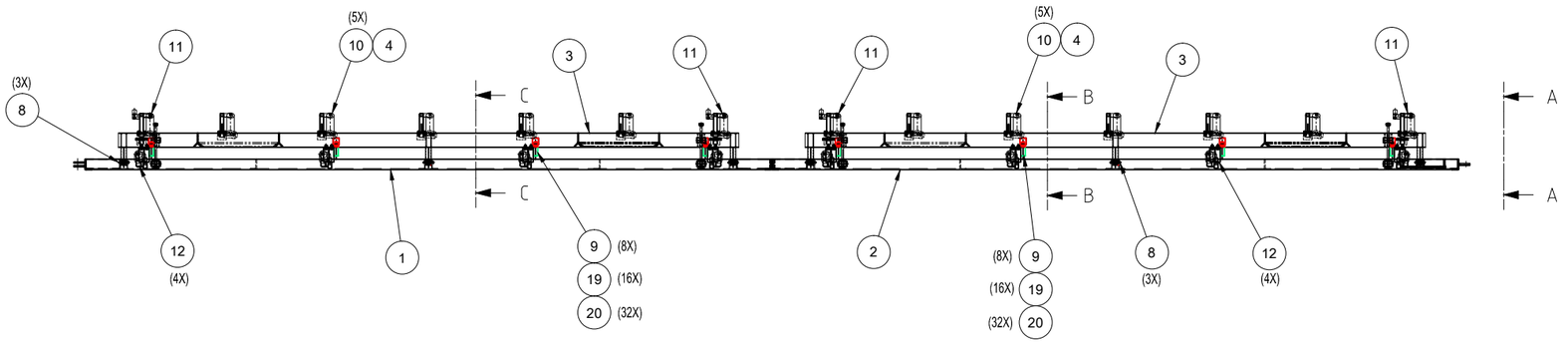

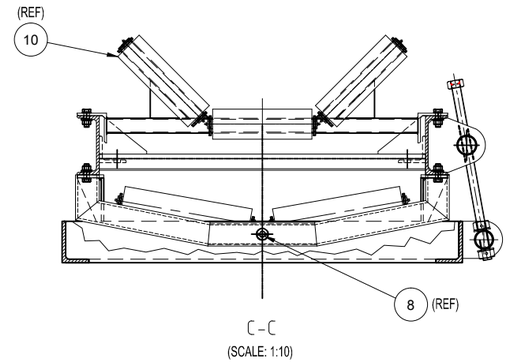

NOTES:

1. ALL ROLLER ASSEMBLIES TO BE FILLED WITH GREASE.
2. TORQUE FASTENERS PER ROBBINS DRAWING 5750 9900 17.

PROPRIETARY NOTICE
The information in this drawing is the property of The Robbins Company, and remains their sole property. It shall not be copied, used or disclosed to others in whole or in part without prior written consent of The Robbins Company. Any such copies made or disclosed to others shall also be loaned with this notice, without any modification, and shall be returned upon request to The Robbins Company.

REV	DESCRIPTION	REV'D BY/ DATE	APP'D BY/ DATE

MACHINE	NEXT ASSY
EPR2016-376	1046404

UNLESS NOTED ALL DIMS ARE mm
TOLERANCES UNLESS NOTED

FRACTIONS	DECIMALS	ANGLES
0-300 ± 1/5	X ± 1.5	± 1°
300-1500 ± 3	X.X ± 1.0	
1500-6000 ± 6	X.XX ± .40	
6000+ ± 12	X.XXX ± .100	

MACHINING (mm) | SURFACE FINISH

THIRD ANGLE PROJECTION
DIMENSIONS (X) ARE REFERENCE
ALL GEOMETRIC DIMENSIONING & TOLERANCING PER ANSI Y14.5-2009

TITLE: CONVEYOR FRAME ASSEMBLY, RH

SIZE	DWG No.	REV	SHT	SCALE
D	1046407	0	1 of 1	1:40

DO NOT SCALE

DRAWN BY	CHECKED BY (INSPECTED)
L.LANGEL	R.FINE
DATE 2/15/2012	CHECKED DESIGN D.WILSON
WEIGHT TOTAL 3372.0 Kg	APPROVED BY J.HEINEMAN
	DATE 4/4/2012

Robbins

www.TheRobbinsCompany.com

1046407

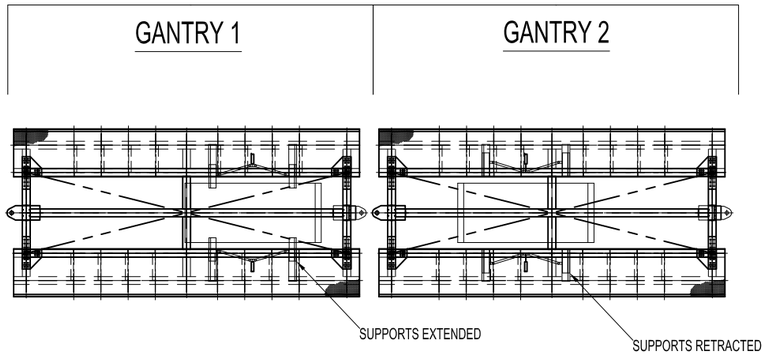

PLAN VIEW - DURING SEGMENT PLACEMENT ON SLIDING SUPPORTS

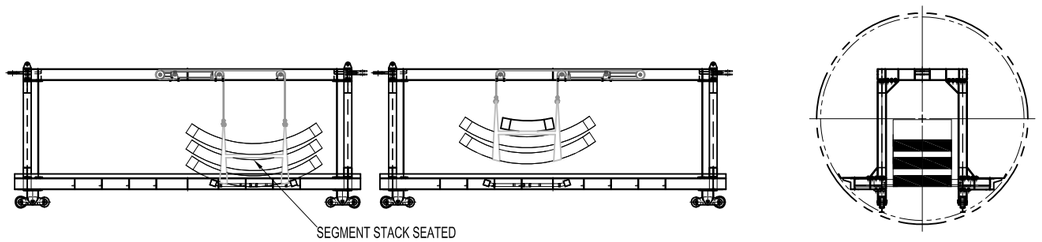

LEFT HAND SIDE - DURING SEGMENT PLACEMENT ON SLIDING SUPPORTS

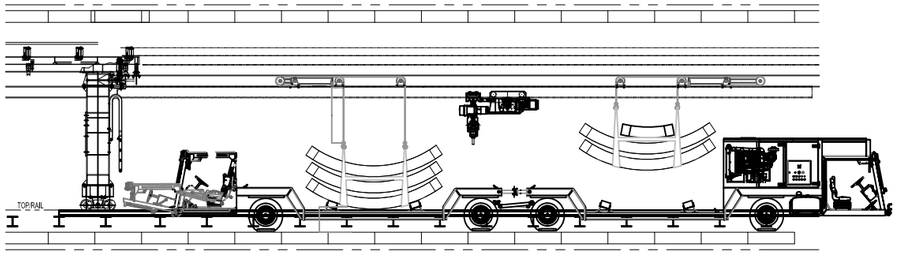

LEFT HAND SIDE - DURING SEGMENT UNLOAD

PROPRIETARY NOTICE
The information disclosed herein is the property of The Robbins Company, and reveals the sole property. It shall not be reproduced in whole or in part, or used in any way other party, without prior written consent of The Robbins Company. The recipient agrees to maintain this information in confidence and not to reproduce or otherwise disclose it to any unauthorized person. Upon request, the recipient will return to The Robbins Company all copies and other tangible media concerning this information.

MACHINE	NEXT ASSY

UNLESS NOTED ALL DIMS ARE mm

TOLERANCES UNLESS NOTED

FRACTIONS	MACHINED PARTS	
0-300 ± 1.5	X ± 1.5	
300-1500 ± 3	X.X ± 1.0	
1500-6000 ± 6	X.XX ± .40	
6000+ ± 12	X.XXX ± .100	
THIRD ANGLE PROJECTION	ANGLES ± 1°	
	SURFACE	

DIMENSIONS IN ARE REFERENCE

ALL GEOMETRIC DIMENSIONING & TOLERANCING PER ANSI Y14.5-2009

REV	DESCRIPTION	REV'D BY/ DATE	APP'D BY/ DATE

TITLE: SEGMENT UNLOADER CONCEPT

SIZE	DWG No.	REV	SHT	SCALE
D	XXXXXXX	0	1 OF 1	1:75
				DO NOT SCALE

DRAWN BY	CHECKED STANDARDS
V.HENCKEL	
DATE 04/25/12	CHECKED DESIGN
WEIGHT TOTAL	APPROVED BY
	DATE

Robbins

www.TheRobbinsCompany.com

XXXXXXX

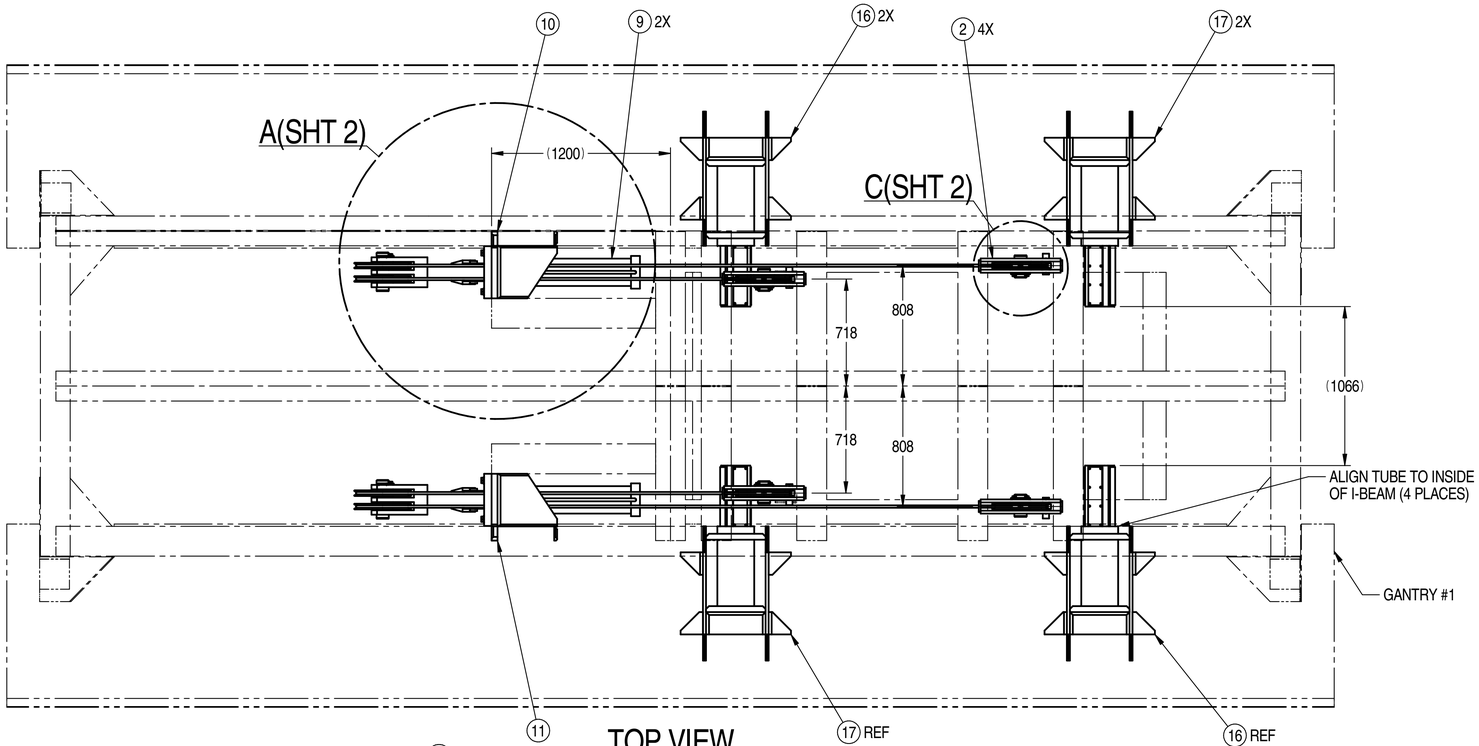

TOP VIEW

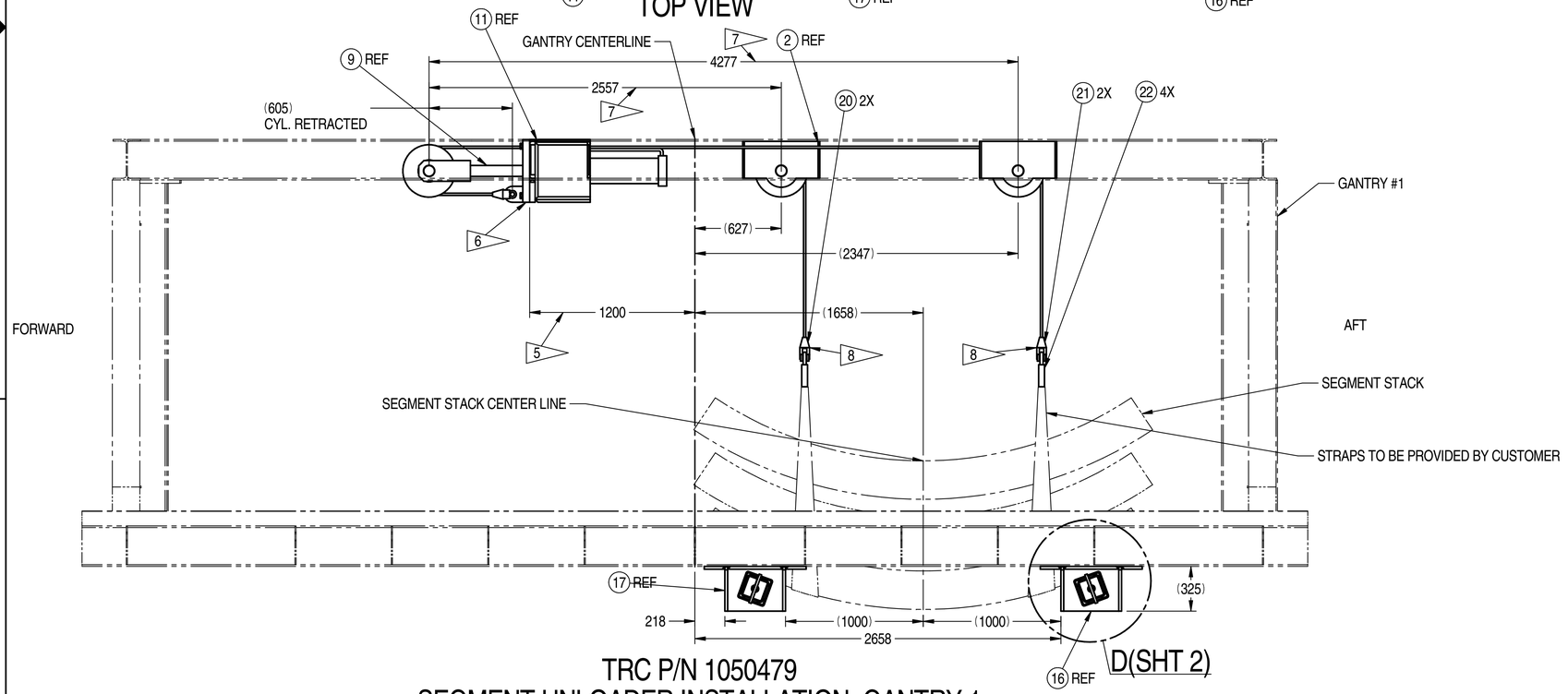

TRC P/N 1050479
SEGMENT UNLOADER INSTALLATION, GANTRY 1
SCALE 1:20

QTY	PART No.	DESCRIPTION	DWG No.	WT. Total (kgs)	ITEM
8	1050516	SHEAVE & BEARING	1050516	96.6 kg	1
4	1051852	MOUNT, SHEAVE, MACHINING	1051852	199.3 kg	2
8	A22152-50308	HHCS, M16x30mm C10.9	A22152	0.7 kg	3
12	A22158-5	WASHER, HD NW OD M16	A22158	0.1 kg	4
16	1051642	THRUST WASHER	1051642	4.5 kg	5
4	1051821	PIN, KEYBAR RETAINED Ø82.55mm	1051821	23.5 kg	6
2	1051797	PIN, KEYBAR RETAINED Ø82.55mm	1051797	21.0 kg	7
6	D65175-090	KEYBAR, METRIC 90mm	D65175	2.3 kg	8
2	1051238	CYL, BØ160mm X RØ80mm X S610mm	1051238	566.0 kg	9
1	1051261	MOUNT, HYDRAULIC CYLINDER, RH	1051261	111.1 kg	10
1	1051923	MOUNT, HYDRAULIC CYLINDER, LH	1051923	111.1 kg	11
16	A22158-7	WASHER, HD NW OD M24	A22158	0.5 kg	12
4	A22152-50358	HHCS, M16x35mm C10.9	A22152	0.4 kg	13
8	A22152-71308	HHCS, M24x130mm C10.9	A22152	4.7 kg	14
8	A22154-78	NUT, M24 C10	A22154	0.9 kg	15
2	1050566	TUBE, SEGMENT STACK SUPPORT, RH	1050566	354.4 kg	16
2	1051216	TUBE, SEGMENT STACK SUPPORT, LH	1051216	354.4 kg	17
4	1051067	SLIDER ASSY	1051067	163.5 kg	18
4	1051092	CYL, BØ25mm X RØ12mm X S410mm	1051092	15.2 kg	19
2	1052483	WIRE ROPE W/ TERMINATIONS, 5.32m	1052483	46.3 kg	20
2	1052520	WIRE ROPE W/ TERMINATIONS, 7.04m	1052520	46.3 kg	21
4	1052465	EYE HOOK, 5T, GALVANIZED	1052465	18.0 kg	22

NOTES:

1. REMOVE ALL BURRS & BREAK SHARP EDGES.
2. ALL WELDING SHALL MEET THE REQUIREMENTS OF THE LATEST EDITION OF THE AWS STRUCTURAL WELDING CODE (D1.1/D1.1M). ALL SECTIONS AS APPLICABLE UNLESS OTHERWISE NOTED. USE E70XX LOW HYDROGEN ELECTRODES OR EQUIVALENT.
3. PAINT PER ROBBINS SPEC RC1852. MACHINED SURFACES NOT TO BE PAINTED, BUT PROTECTED BY OTHER SUITABLE METHODS.
4. TORQUE FASTENERS PER TRC DRAWING 5750990017.
5. VERIFY CRITICAL DIMENSIONS ARE CORRECT BEFORE WELDING CYLINDER MOUNTS (ITEMS 10 AND 11) TO THE GANTRY.
6. ASSEMBLE CYLINDERS (ITEM 9) TO THE CYLINDER MOUNTS (ITEMS 10 AND 11).
7. VERIFY CRITICAL DIMENSIONS ARE CORRECT BEFORE WELDING SHEAVE MOUNTS (ITEM 2) TO GANTRY.
8. ITEMS 20 AND 21 (REPEAT FOR ALL 4 ASSY'S):
   A) ASSEMBLE ONE SPELTER SKT TO ONE END OF ROPE PER MANUFACTURER'S INSTRUCTIONS.
   B) ATTACH SPELTER SOCKET TO CYLINDER LUG WITH COTTER PIN ON OUTSIDE TO PROVIDE MAX CLEARENCE FROM ADJACENT SPELTER SOCKET.
   C) PASS OTHER END OF ROPE THROUGH ASSEMBLY.
   D) VERIFY ROPE-END HEIGHT IS CORRECT PER DWG (SEE SHEET 2, AFT VIEW OF SEGMENT UNLOADER ASSY).
   E) ATTACH OTHER SPELTER SOCKET PER MANUFACTURER'S INSTRUCTIONS.
   F) ATTACH EYE HOOKS TO END OF WIRE ROPE ASSY'S.

PROPRIETARY NOTICE
The information disclosed hereon, is the sole property of The Robbins Company, and remains their sole property. It shall not be copied, used or disclosed to others for any purpose by any other party without prior written consent of The Robbins Company. By accepting this information, recipient agrees to keep it confidential and to use it solely for the purpose for which it is furnished, and is to be returned upon request to The Robbins Company.

REV	DESCRIPTION	REV'D BY/ DATE	APP'D BY/ DATE

MACHINE	NEXT ASSY
EPB2016-376/377	1046701
	1046702

UNLESS NOTED ALL DIMS ARE mm
TOLERANCES UNLESS NOTED
FRACT (mm): 0-300 ±1.5; 300-1500 ±3; 1500-6000 ±6; 6000+ ±12
MACHINING (mm): X ±1.5; X.X ±1.0; X.XX ±0.40; X.XXX ±0.100; ANGLES ±1°; SURFACE FINISH 6.3
THIRD ANGLE PROJECTION
DIMENSIONS (X) ARE REF
ALL GEOMETRIC DIMENSIONING & TOLERANCING PER ANSI Y14.5-2009

TITLE: SEGMENT UNLOADER INSTALLATION, GANTRY 1

SIZE	DWG No.	REV	SHT	OF	SCALE
D	1050479	0	1	2	1:50

DO NOT SCALE

DRAWN BY	CHECKED STANDARDS
V.HENCKEL	D.WILSON
DATE 08/21/2012	CHECKED DESIGN D.WILSON
UNIT OF MEASURE EACH	APPROVED BY J.HEINEMAN
WEIGHT TOTAL 2133.3 kg	DATE 08/31/2012

Robbins

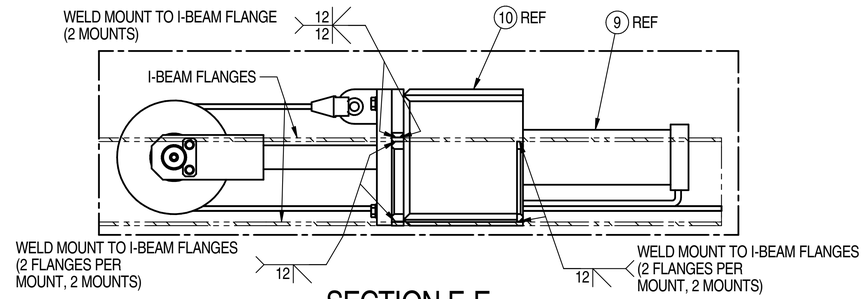

SECTION E-E
SCALE 1:10

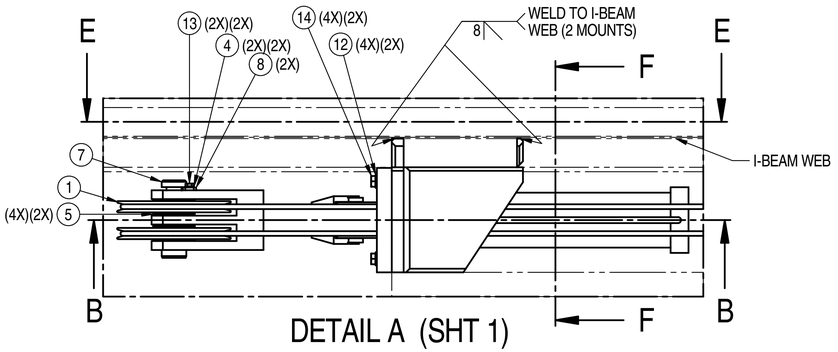

DETAIL A (SHT 1)

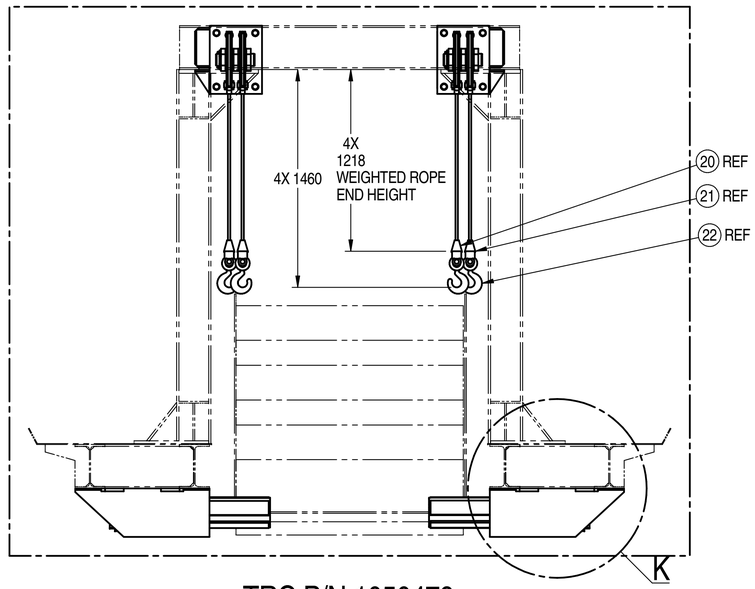

TRC P/N 1050479
SEGMENT UNLOADER INSTALLATION, GANTRY 1
SCALE 1:20

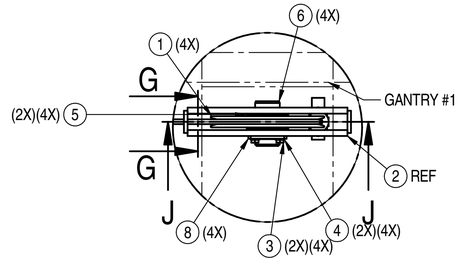

DETAIL C (SHT 1)
SCALE 1:10

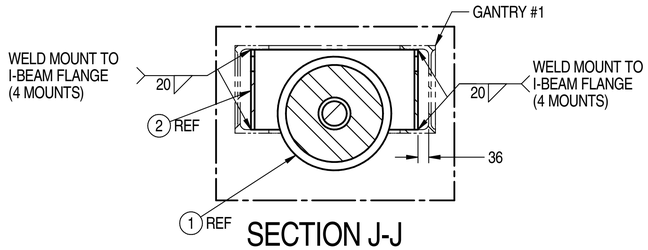

SECTION J-J
SCALE 1:10

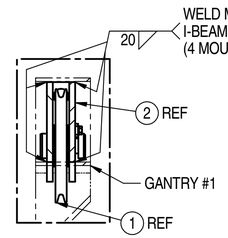

SECTION G-G
SCALE 1:10 ◠90.0°

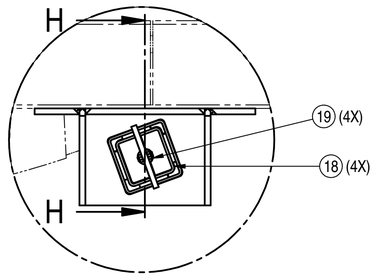

DETAIL D (SHT 1)
SCALE 1:10

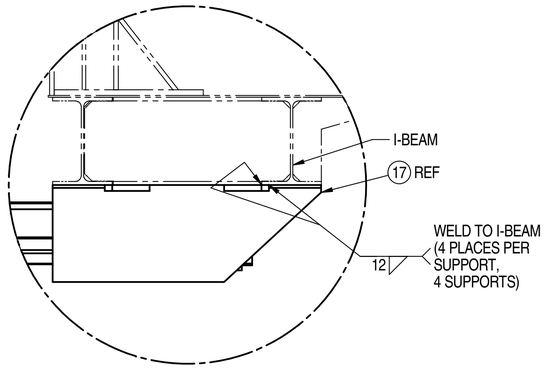

DETAIL K
SCALE 1:10

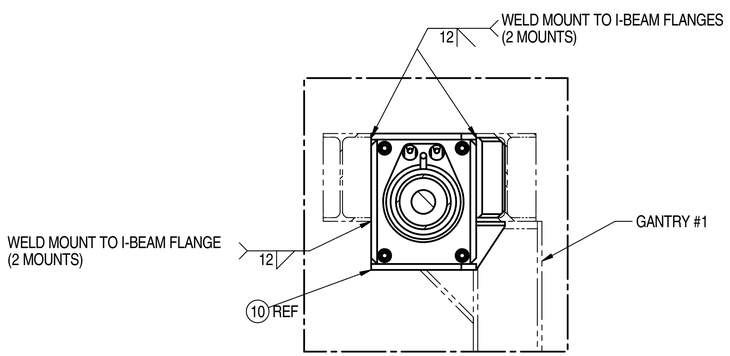

SECTION F-F
SCALE 1:10 ◠270.0°

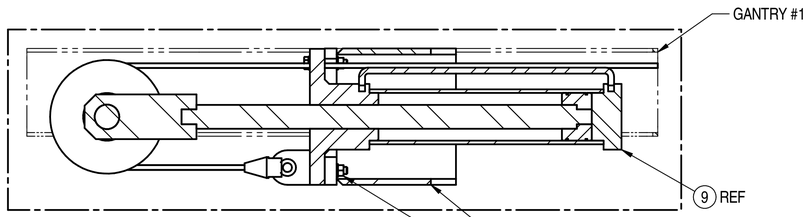

SECTION B-B
SCALE 1:10

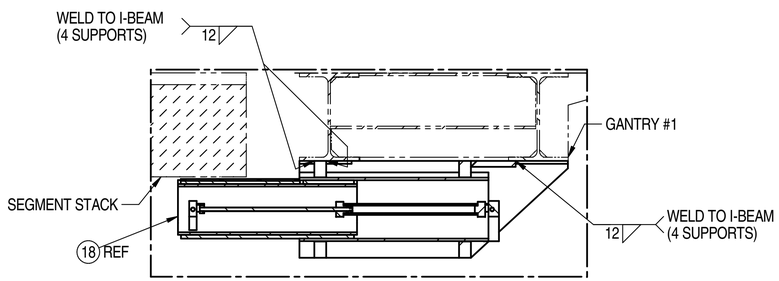

SECTION H-H
SCALE 1:10

PROPRIETARY NOTICE
The information disclosed hereon, is the sole property of The Robbins Company, and remains their sole property. It shall not be copied, used or disclosed to anyone outside the Company without prior written consent of The Robbins Company. By accepting this information, recipient agrees to defend, indemnify and hold harmless The Robbins Company for whatsoever to the conditions. This material is on loan only, and is to be returned upon request to The Robbins Company.

MACHINE	NEXT ASSY
EPB2016-376/377	1046701
	1046702

UNLESS NOTED ALL DIMS ARE mm

TOLERANCES UNLESS NOTED

MACHINING (mm)		MACHINING (inch)	
0-300	±1.5	X	±1.5
300-1500	±3	X.X	±1.0
1500-6000	±6	X.XX	±0.40
6000+	±12	X.XXX	±0.100
		ANGLES	±1°
THIRD ANGLE PROJECTION		SURFACE FINISH	6.3

DIMENSIONS (X) ARE REF

ALL GEOMETRIC DIMENSIONING & TOLERANCING PER ANSI Y14.5-2009

REV	DESCRIPTION	REV'D BY/ DATE	APP'D BY/ DATE

TITLE: SEGMENT UNLOADER INSTALLATION, GANTRY 1

SIZE	DWG No.	REV	SHT	SCALE
D	1050479	0	2 OF 2	1:20

DO NOT SCALE

DRAWN BY	CHECKED STANDARDS
V.HENCKEL	D.WILSON
DATE	CHECKED DESIGN
08/21/2012	D.WILSON
UNIT OF MEASURE	APPROVED BY
EACH	J.HENEMAN
WEIGHT TOTAL	DATE
2133.3 kg	08/31/2012

Robbins

www.TheRobbinsCompany.com

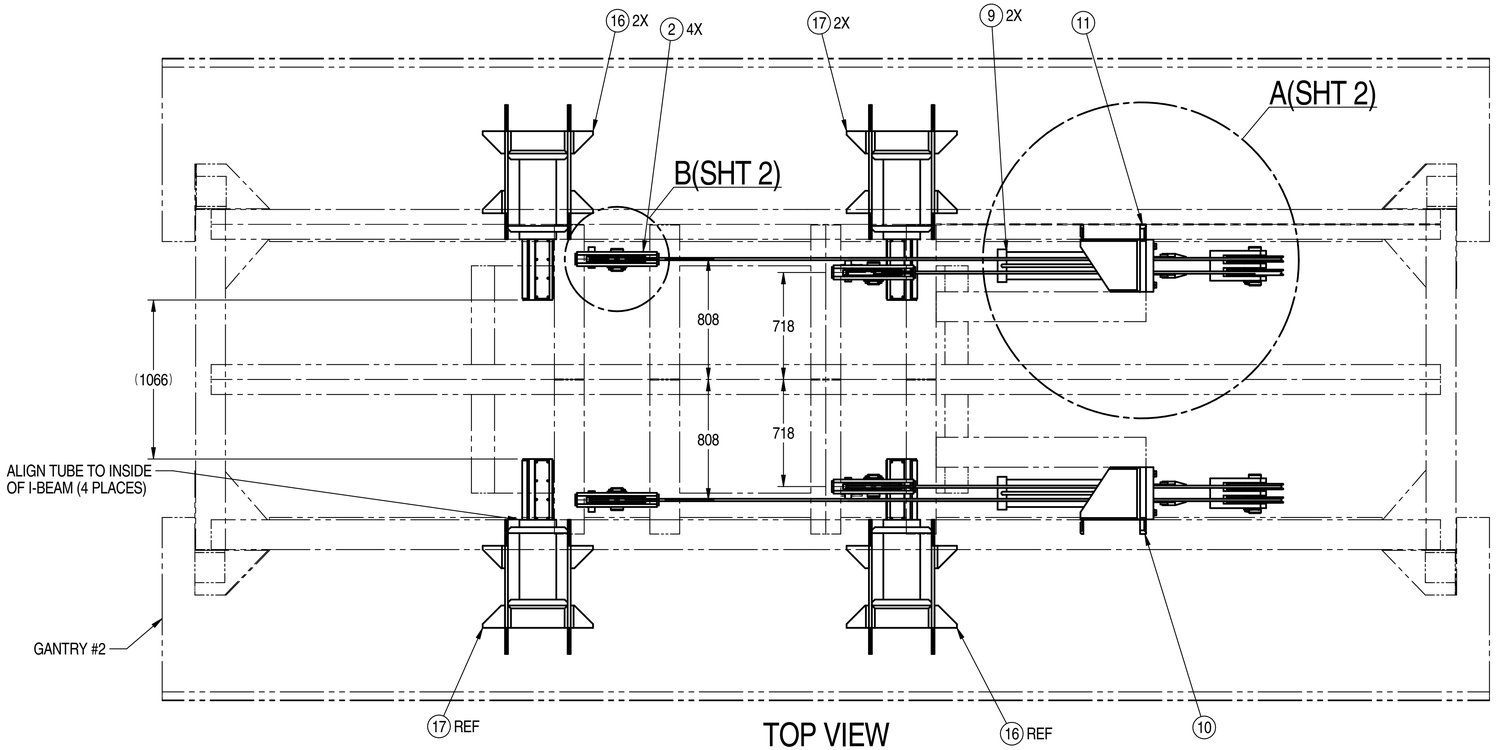

TOP VIEW

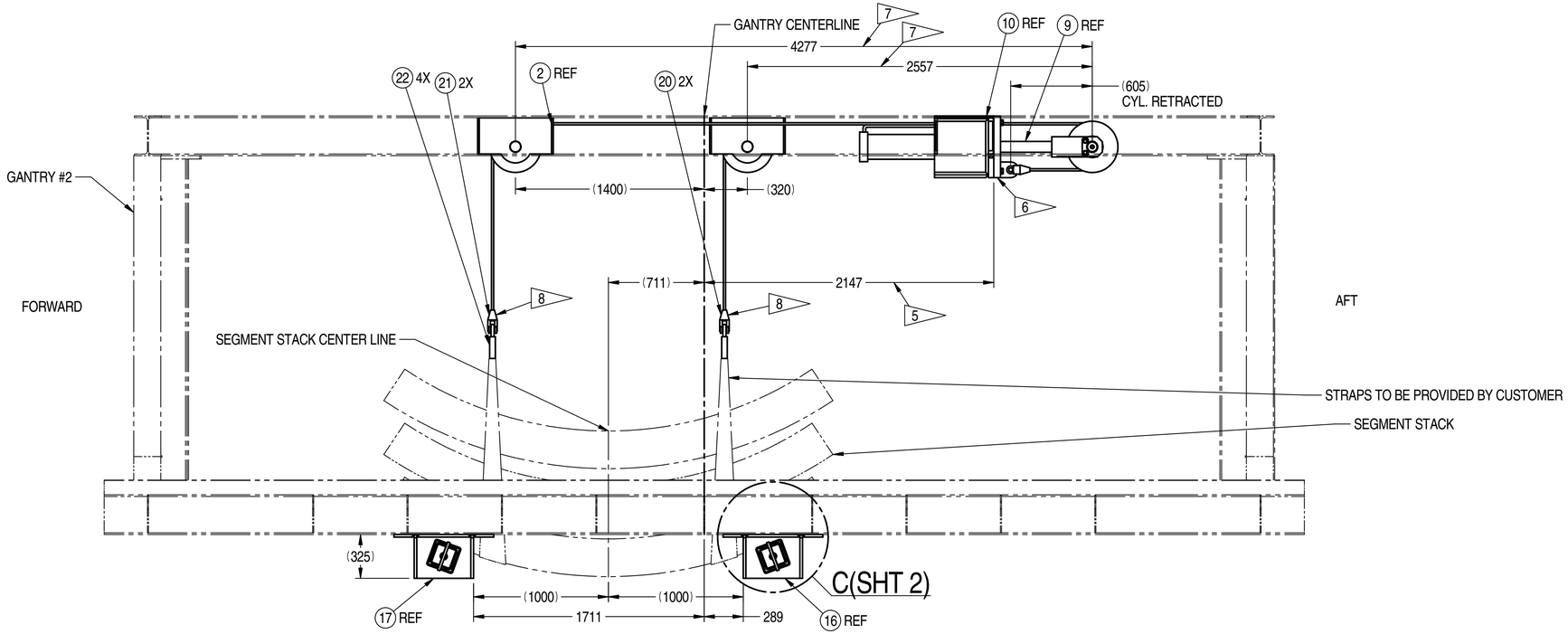

TRC P/N 1051672
SEGMENT UNLOADER INSTALLATION, GANTRY 2
SCALE 1:20

QTY	PART No.	DESCRIPTION	DWG No.	WT. Total (kgs)	ITEM
8	1050516	SHEAVE & BEARING	1050516	96.6 kg	1
4	1051852	MOUNT, SHEAVE, MACHINING	1051852	199.3 kg	2
8	A22152-50308	HHCS, M16x30mm C10.9	A22152	0.7 kg	3
12	A22158-5	WASHER, HD NW OD M16	A22158	0.1 kg	4
16	1051642	THRUST WASHER	1051642	4.5 kg	5
4	1051821	PIN, KEYBAR RETAINED Ø82.55mm	1051821	23.5 kg	6
2	1051797	PIN, KEYBAR RETAINED Ø82.55mm	1051797	21.0 kg	7
6	D65175-090	KEYBAR, METRIC 90mm	D65175	2.3 kg	8
2	1051238	CYL, BØ160mm X RØ80mm X S610mm	1051238	566.0 kg	9
1	1051261	MOUNT, HYDRAULIC CYLINDER, RH	1051261	111.1 kg	10
1	1051923	MOUNT, HYDRAULIC CYLINDER, LH	1051923	111.1 kg	11
16	A22158-7	WASHER, HD NW OD M24	A22158	0.5 kg	12
4	A22152-50358	HHCS, M16x35mm C10.9	A22152	0.4 kg	13
8	A22152-71308	HHCS, M24x130mm C10.9	A22152	4.7 kg	14
8	A22154-78	NUT, M24 C10	A22154	0.9 kg	15
2	1050566	TUBE, SEGMENT STACK SUPPORT, RH	1050566	354.4 kg	16
2	1051216	TUBE, SEGMENT STACK SUPPORT, LH	1051216	354.4 kg	17
4	1051067	SLIDER ASSY	1051067	163.5 kg	18
4	1051092	CYL, BØ25mm X RØ12mm X S410mm	1051092	15.2 kg	19
2	1052483	WIRE ROPE W/ TERMINATIONS, 5.32m	1052483	46.3 kg	20
2	1052520	WIRE ROPE W/ TERMINATIONS, 7.04m	1052520	46.3 kg	21
4	1052465	EYE HOOK, 5T, GALVANIZED	1052465	18.0 kg	22

NOTES:

1. REMOVE ALL BURRS & BREAK SHARP EDGES.
2. ALL WELDING SHALL MEET THE REQUIREMENTS OF THE LATEST EDITION OF THE AWS STRUCTURAL WELDING CODE (D1.1/D1.1M). ALL SECTIONS AS APPLICABLE UNLESS OTHERWISE NOTED. USE E70XX LOW HYDROGEN ELECTRODES OR EQUIVALENT.
3. PAINT PER ROBBINS SPEC RC1852. MACHINED SURFACES NOT TO BE PAINTED, BUT PROTECTED BY OTHER SUITABLE METHODS.
4. TORQUE FASTENERS PER TRC DRAWING 5750990017.

5 VERIFY CRITICAL DIMENSIONS ARE CORRECT BEFORE WELDING CYLINDER MOUNTS (ITEMS 10 AND 11) TO THE GANTRY.

6 ASSEMBLE CYLINDERS (ITEM 9) TO THE CYLINDER MOUNTS (ITEMS 10 AND 11).

7 VERIFY CRITICAL DIMENSIONS ARE CORRECT BEFORE WELDING SHEAVE MOUNTS (ITEM 2) TO GANTRY.

8 ITEMS 20 AND 21 (REPEAT FOR ALL 4 ASSY'S):
- A) ASSEMBLE ONE SPELTER SKT TO ONE END OF ROPE PER MANUFACTURER'S INSTRUCTIONS.
- B) ATTACH SPELTER SOCKET TO CYLINDER LUG WITH COTTER PIN ON OUTSIDE TO PROVIDE MAX CLEARENCE FROM ADJACENT SPELTER SOCKET.
- C) PASS OTHER END OF ROPE THROUGH ASSEMBLY.
- D) VERIFY ROPE-END HEIGHT IS CORRECT PER DWG (SEE SHEET 2, AFT VIEW OF SEGMENT UNLOADER ASSY).
- E) ATTACH OTHER SPELTER SOCKET PER MANUFACTURER'S INSTRUCTIONS.
- F) ATTACH EYE HOOKS TO END OF WIRE ROPE ASSY'S.

PROPRIETARY NOTICE
The information disclosed hereon, is the sole property of The Robbins Company, and licensors their sole property. It shall not be used, reproduced, copied, disclosed, transferred, or loaned to any other party without prior written consent of The Robbins Company. By accepting this information, recipient agrees to defend, indemnify and hold harmless The Robbins Company for whatsoever in this conditions. This material is on loan only, and is to be returned upon request to The Robbins Company.

REV	DESCRIPTION	REV'D BY/ DATE	APP'D BY/ DATE

MACHINE	NEXT ASSY
EPB2016-376/377	1046701
	1046702

UNLESS NOTED ALL DIMS ARE mm

TOLERANCES UNLESS NOTED

MACHINING (mm)		CASTING (mm)	
0-300	±1.5	X	±1.5
300-1500	±3	X.X	±1.0
1500-6000	±6	X.XX	±0.40
6000+	±12	X.XXX	±0.100
		ANGLES	±1°
		SURFACE FINISH	6.3

THIRD ANGLE PROJECTION

DIMENSIONS (X) ARE REF

ALL GEOMETRIC DIMENSIONING & TOLERANCING PER ANSI Y14.5-2009

TITLE
SEGMENT UNLOADER INSTALLATION, GANTRY 2

SIZE	DWG No.	REV	SHT	SCALE
D	1051672	0	1 OF 2	1:20

DO NOT SCALE

DRAWN BY	CHECKED STANDARDS
V.HENCKEL	B.WAKELEE
DATE	CHECKED DESIGN
08/24/2012	J.HEINEMAN
UNIT OF MEASURE	APPROVED BY
EACH	J.HEINEMAN
WEIGHT TOTAL	DATE
2133.3 kg	08/31/2012

Robbins

www.TheRobbinsCompany.com

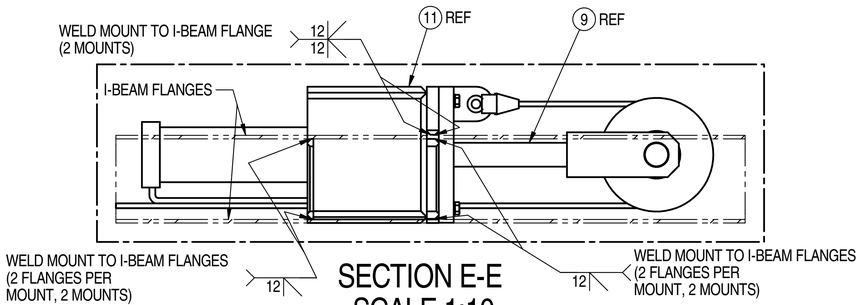

SECTION E-E
SCALE 1:10

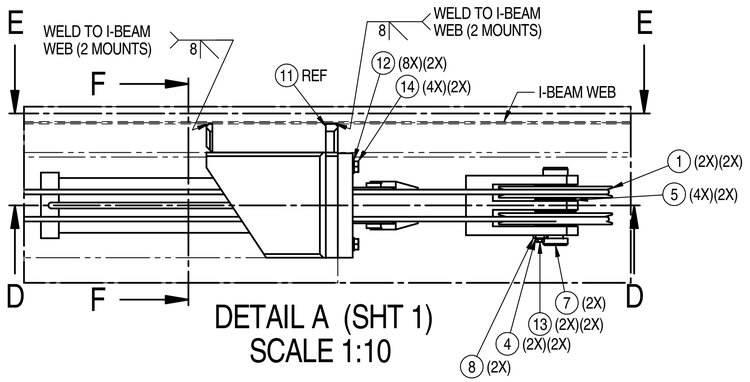

DETAIL A (SHT 1)
SCALE 1:10

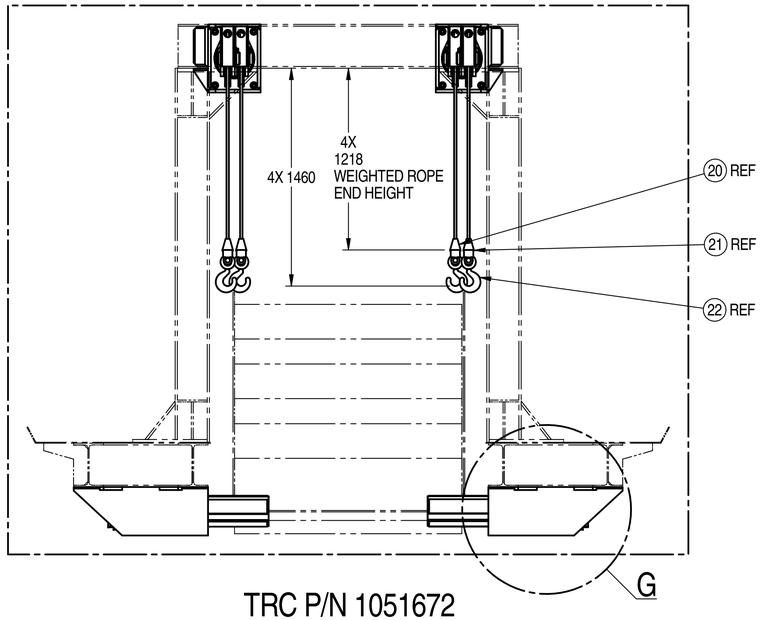

TRC P/N 1051672
SEGMENT UNLOADER INSTALLATION, GANTRY 2
SCALE 1:20

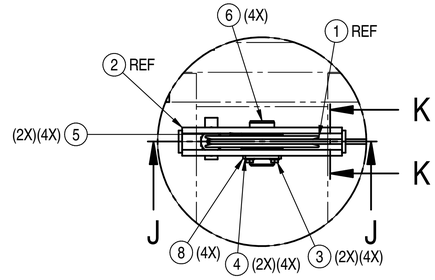

DETAIL B (SHT 1)
SCALE 1:10

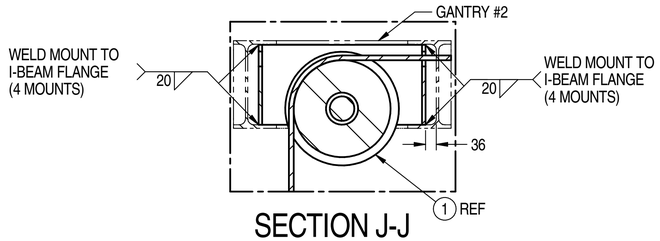

SECTION J-J
SCALE 1:10

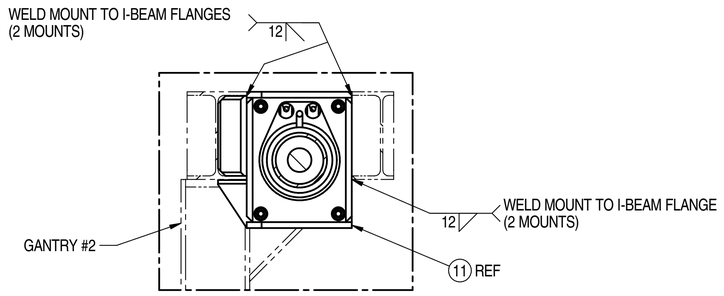

SECTION F-F
SCALE 1:10 ◠90.0°

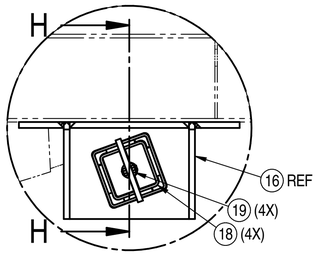

DETAIL C (SHT 1)
SCALE 1:10

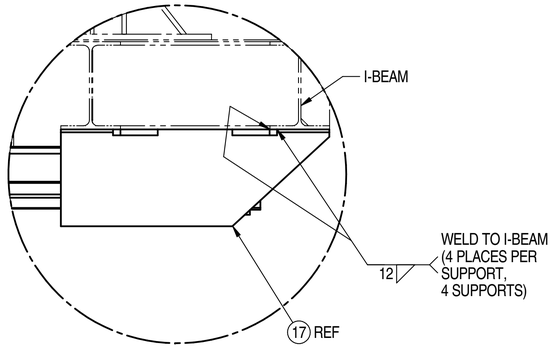

DETAIL G
SCALE 1:10

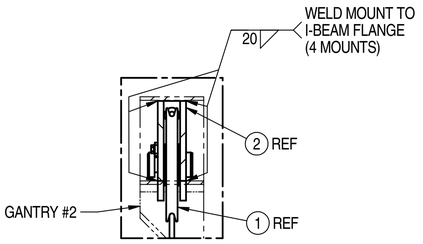

SECTION K-K
SCALE 1:10 ◠270.0°

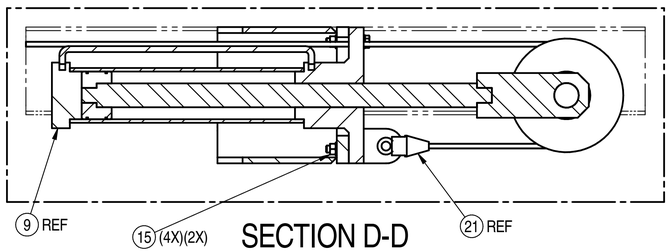

SECTION D-D
SCALE 1:10

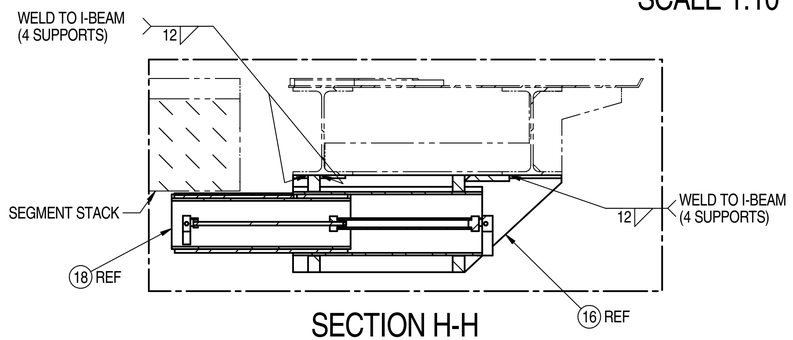

SECTION H-H
SCALE 1:10

PROPRIETARY NOTICE
The information disclosed hereon, is the sole property of The Robbins Company, and remains their sole property. It shall not be copied, used or disclosed to others for any purpose without prior written consent of The Robbins Company. By accepting this information, recipient agrees to comply with the foregoing restrictions and to protect same to whatsoever is the conditions. This material is on loan only, and is to be returned upon request to The Robbins Company.

REV	DESCRIPTION	REV'D BY/ DATE	APP'D BY/ DATE

MACHINE	NEXT ASSY
EPB2016-376/377	1046701
	1046702

UNLESS NOTED ALL DIMS ARE mm
TOLERANCES UNLESS NOTED

FABRICATION (mm)		MACHINING (mm)	
0-300	±1.5	X	±1.5
300-1500	±3	X.X	±1.0
1500-6000	±6	X.XX	±0.40
6000+	±12	X.XXX	±0.100
		ANGLES	±1°
THIRD ANGLE PROJECTION		SURFACE FINISH	6.3

DIMENSIONS (X) ARE REF.
ALL GEOMETRIC DIMENSIONING & TOLERANCING PER ANSI Y14.5-2009

TITLE: SEGMENT UNLOADER INSTALLATION, GANTRY 2

SIZE	DWG No.	REV	SHT	OF	SCALE
D	1051672	0	2	2	1:20

DO NOT SCALE

DRAWN BY	CHECKED STANDARDS
V.HENCKEL	B.WAKELEE
DATE	CHECKED DESIGN
08/24/2012	J.HEINEMAN
UNIT OF MEASURE	APPROVED BY
EACH	J.HEINEMAN
WEIGHT TOTAL	DATE
2133.3 kg	08/31/2012

Robbins

www.TheRobbinsCompany.com

QTY	PART No.	DESCRIPTION	DWG No.	WT. Total	ITEM
44	A22154-45	NUT, M12 C8	A22154	0.88 kg	38
152	A67526-40258	SFHS M12x25mm C10.9	A67526	4.56 kg	39
8	A22152-40305	HHCS M12x30mm C8.8	A22152	0.32 kg	40
56	A67526-50458	SFHS M16x45mm C10.9	A67526	4.48 kg	41
8	A67526-10208	SFHS M6x20mm C10.9	A67526	0.08 kg	42
4	A22153-60605	SHCS M20x60mm C8,8	A22153	1.6 kg	43
4	A22158-6	WASHER, HD NW OD M20	A22158	0.04 kg	44
24	A22152-20205	HHCS M8x20mm C8,8	A22152	0.24 kg	45
24	A22158-2	WASHER, HD NW OD M8	A22158	0.24 kg	46
1	1051157	SLIDE FRAME C	1051157	220.4 kg	47
1	D65170-050	BEARING, SPHERICAL PLAIN	D65170	0.54 kg	48

QTY	PART No.	DESCRIPTION	DWG No.	WT. Total	ITEM
1	1051160	BASE FRAME-2	1051160	1982 kg	1
4	B381014-1	WHEEL BOGIE PIVOT PIN	B381014	20 kg	2
16	B381018-1	LIFT RAM SLIDE PAD	B381018	8 kg	3
4	C381005-1	LIFT RAM	C381005	120 kg	4
36	1051154	UPPER WEAR PAD - INNER	1051154	1.8 kg	5
1	1051156	SLIDE FRAME B	1051156	420.4 kg	6
4	1051153	WEAR PAD	1051153	1.68 kg	7
2	1051167	LIFT BEAM B	1051167	676 kg	8
8	B381023-1	LIFT RAM KEY	B381023	2.4 kg	9
4	C381005-2	LIFT RAM	C381005	200 kg	10
2	1051166	LIFT BEAM A	1051166	738 kg	11
1	1051151	TOWING ARM-1	1051151	212 kg	12
2	1051170	TOWING PAD	1051170	1.65 kg	13
12	B381010-1	WHEEL	B381010	144 kg	14
16	1051165	LOWER SLIDE PAD	1051165	24 kg	15
1	1051155	SLIDE FRAME A	1051155	791 kg	16
2	B381019-1	SLIDE RAM CLEVIS PIN	B381019	4 kg	17
1	1051152	TOWING ARM-2	1051152	212 kg	18
1	C381004-1	SLIDE RAM	C381004	108 kg	19
1	1051159	BASE FRAME-1	1051159	2473.5 kg	20
1	1051163	SEAT OF BEARING	1051163	3.27 kg	21
1	1051164	PIN OF BEARING	1051164	4.5 kg	22
12	B381011-1	WHEEL AXLE	B381011	48 kg	23
4	B381009-1	WHEEL BOGIE	B381009	96 kg	24
24	B381012-1	WHEEL BUSH	B381012	12 kg	25
12	B381013-1	KEY PLATE	B381013	1.2 kg	26
2	1051158	PIN	1051158	1.4 kg	27
2	1051169	UPPER WEAR PAD B-OUTER	1051169	20 kg	28
2	1051168	UPPER WEAR PAD A-OUTER	1051168	21.6 kg	29
8	A22152-50355	HHCS M16x35mm C8.8	A22152	0.8 kg	30
10	A22158-5	WASHER, HD NW OD M16	A22158	0.1 kg	31
16	A22153-70605	SHCS M24x60mm C8,8	A22153	6.4 kg	32
16	A22158-7	WASHER, HD NW OD M24	A22158	0.48 kg	33
2	A22151-51105	HHCS M16x110mm C8,8	A22151	0.4 kg	34
2	A22154-55	NUT, M16 C8	A22154	0.08 kg	35
44	A67526-40508	SFHS M12x55mm C10.9	A67526	2.2 kg	36
52	A22158-4	WASHER, HD NW OD M12	A22158	0.52 kg	37

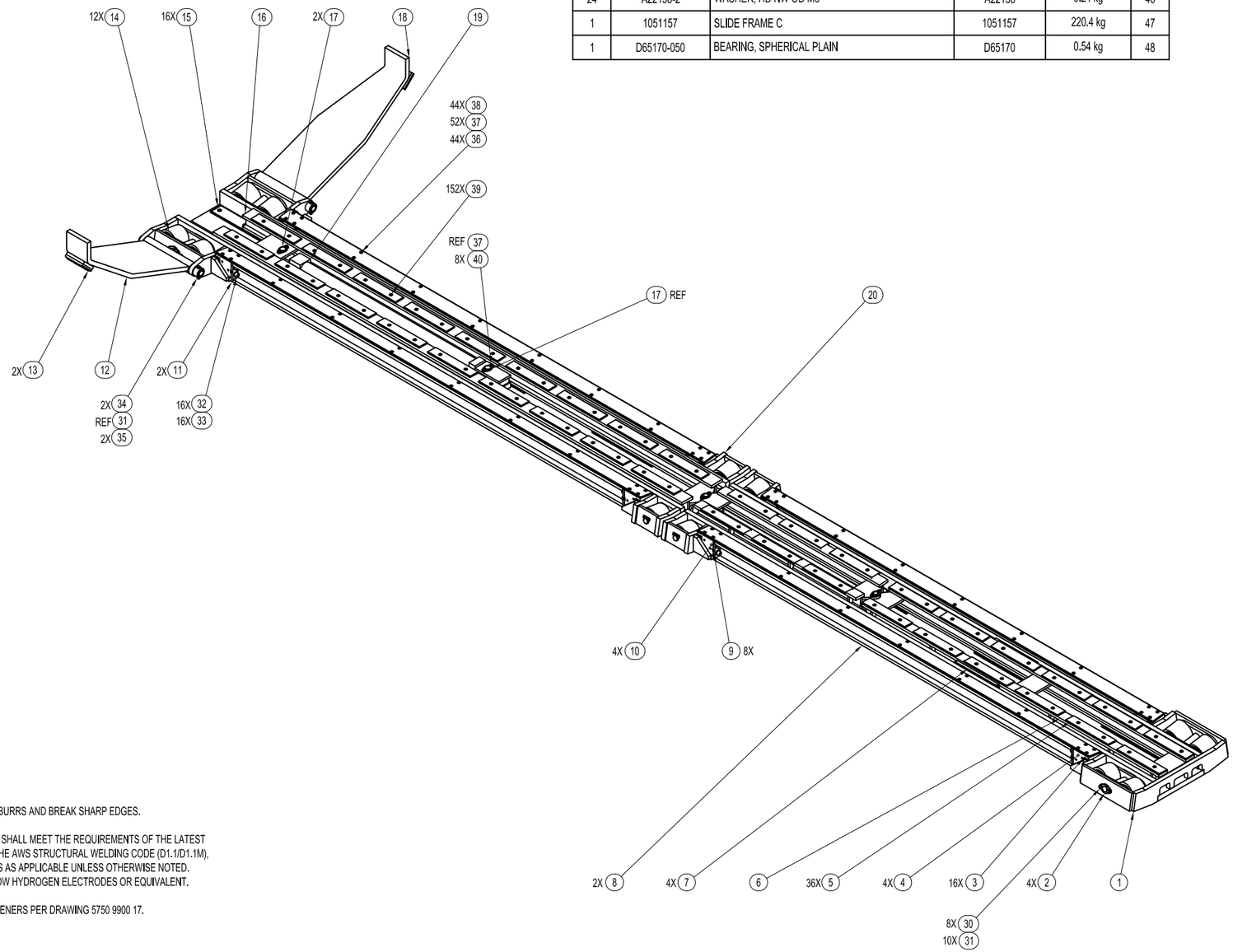

NOTES:

1. REMOVE ALL BURRS AND BREAK SHARP EDGES.
2. ALL WELDING SHALL MEET THE REQUIREMENTS OF THE LATEST EDITION OF THE AWS STRUCTURAL WELDING CODE (D1.1/D1.1M), ALL SECTIONS AS APPLICABLE UNLESS OTHERWISE NOTED. USE E70XX LOW HYDROGEN ELECTRODES OR EQUIVALENT.
3. TORQUE FASTENERS PER DRAWING 5750 9900 17.

PROPRIETARY NOTICE:
This information disclosed herein is the property of The Robbins Company, and remains their sole property. It shall not be copied, used or disclosed to others in whole or in part for any other purpose without written consent of The Robbins Company. Any such copies made or disclosed to others are to be taken in trust with the rights, without any modification, of The Robbins Company to demand and obtain their return. The Robbins Company reserves all rights in the event of publication, and is to be returned upon request to The Robbins Company.

MACHINE	NEXT ASSY
EPB2016-376	1046701
EPB2016-377	1046702

UNLESS NOTED ALL DIMS ARE mm

TOLERANCES UNLESS NOTED

FAB (mm): 0-300 ± 1.5; 300-1500 ± 3; 1500-6000 ± 6; 6000+ ± 12

MACHINING (mm): X ± 1.5; X.X ± 1.0; X.XX ± .40; X.XXX ± .100; ANGLES ± 1°; SURFACE 125

THIRD ANGLE PROJECTION

DIMENSIONS (A) ARE REFERENCE

ALL GEOMETRIC DIMENSIONING & TOLERANCING PER ANSI Y14.5-2009

REV	DESCRIPTION	REV'D BY/ DATE	APP'D BY/ DATE

TITLE: SEGMENT FEEDER

SIZE: D | DWG NO.: 1051150 | REV: 0 | SHT 1 OF 3 | SCALE: 1:20 | DO NOT SCALE

DRAWN BY: GAO SHAOJUN
DATE: 2012/08/04
CHECKED STANDARDS: B.WAKELEE
CHECKED DESIGN: J.HEINEMAN
APPROVED BY: J.HEINEMAN
DATE: 08/27/2012

WEIGHT TOTAL: 8594 kg

Robbins

www.TheRobbinsCompany.com

1051150

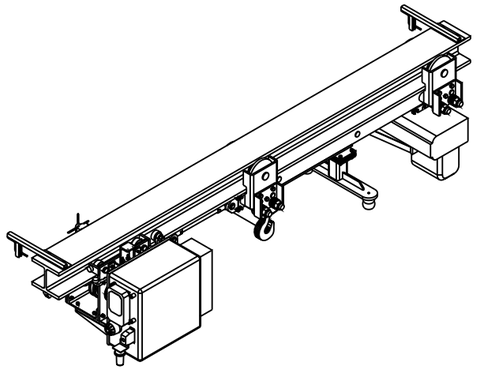

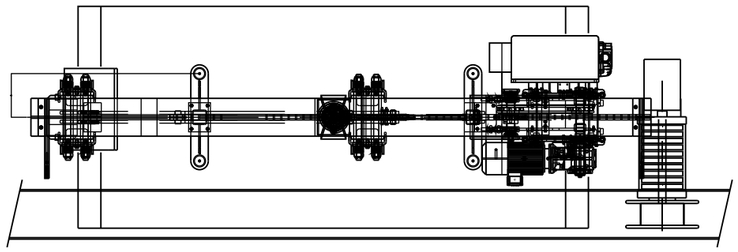

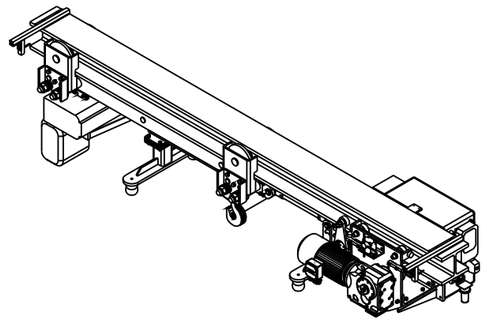

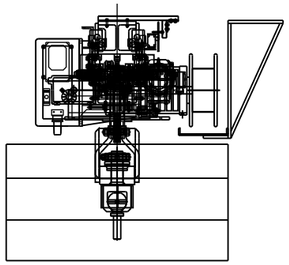

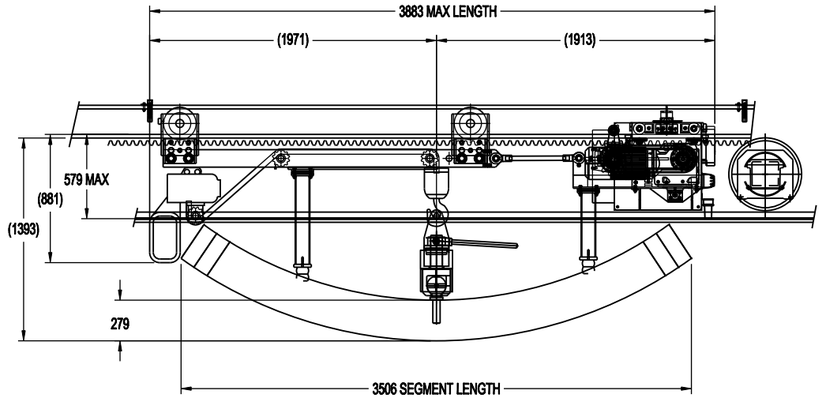

SEGMENT HOIST AND
TUG ASSEMBLY
1:20

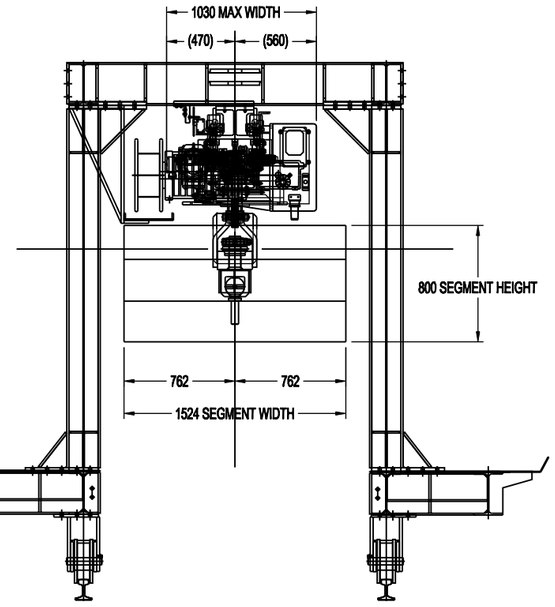

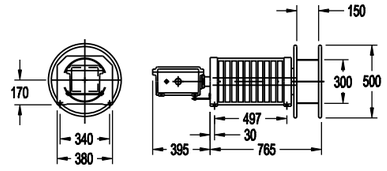

CABLE REEL
1:20

BID NOTES:

- ALTERNATE DESIGNS PERMITTED WITH TRC ENGINEERING APPROVAL
- VENDOR TO SUBMIT DRAWINGS FOR ENGINEERING APPROVAL PRIOR TO PLACEMENT OF ORDER
- VENDOR TO SUPPLY COMPLETE OPERATION & MAINTENANCE MANUAL WITH COMPREHENSIVE PARTS LIST
- VENDOR TO SUBMIT CALCULATIONS FOR ENGINEERING VERIFICATION PRIOR TO MANUFACTURING
- VENDOR TO COORDINATE TRAVEL SPROCKET REQUIREMENTS WITH TRC BEAM TO ENSURE PROPER GEAR MESH
- VENDOR TO IMMEDIATELY ALERT TRC OF ANY ERRORS, OMISSIONS, OR CONTRADICTIONS WITHIN BID DOCUMENTS

GENERAL NOTES & CONDITIONS:
HOIST ASSEMBLY TO INCLUDE: HOIST, TUG UNIT, MOUNTING FRAME, & ALL ELECTRICAL EQUIPMENT REQUIRED FOR CLASS 1 DIV 2 OPERATION .
EQUIPMENT SUPPLIED BY TRC: MONORAIL, TUG SPUR GEAR, LIFTING BRACE, CABLE REEL & CABLE TRAY.
HOIST TO ACCOMMODATE CABLE REEL ATTACHMENT.
HOIST AND TUG UNIT TO PROVIDE STABALIZATION OF SEGMENT AND ADEQUATE CLEARANCE BETWEEN SEGMENT AND OTHER STRUCTURES DURING PICK, PLACE, AND TUG OPERATIONS. ROTATION OF SEGMENT WILL BE PERFORMED MANUALLY. OPERATION INCLUDES PICK, PLACE, AND TUG IN EITHER FORWARD OR REVERSE DIRECTION.
HOIST TO MEET EN12336 & CA OSHA SAFETY STANDARDS.

HOIST OPERATION:
LOAD: 4000kg (8820lbs)
LIFT: 3M
MOTOR: TBD
HOISTING SPEED: HIGH: 3.2 m/min
HOISTING SPEED: LOW: 0.75 m/min

ELECTRICAL OPERATION: CLASS 1 DIV 2
ELECTRICAL: 460VAC, 3 PHASE, 60hz
CONTROL: RADIO CONTROL / PENDANT BACK-UP
TRUE PROPORTIONAL CONTROL
CONTROL POWER DEVELOPED INTERNALLY.
POWER FEED: CABLE REEL (BY TRC)

TRAVEL OPERATION:
SPEED: PROPORTIONAL CONTROL, 24m/MIN MAX
MOTOR: TBD
SPROCKET: SPUR GEAR (SUPPLIED BY VENDOR PER TRC# D116352-1)
RAIL ARTICULATION: HORIZONTAL = ±6°, VERTICAL = ±1°

BEAM INFORMATION (BY TRC):
TRACK LENGTH: 32.1m
VERTICAL BEND RADIUS: 9700mm
OPERATION ANGLE: 11.5° MAX (7° RAIL SLOPE ±4.5° TUNNEL GRADE)
BEAM: 225D X 260W X 25 FLANGE X 16 WEB

PROPRIETARY NOTICE
The information disclosed hereon is the sole property of The Robbins Company and is not to be used, copied or disclosed in any way not authorized in writing by the Robbins Company. By accepting this information, recipient agrees to indemnify and hold harmless The Robbins Company for any damages resulting from unauthorized use of this information.

MACHINE	NEXT ASSY
EPB2016-376	
EPB2016-377	

UNLESS NOTED ALL DIMS ARE mm
TOLERANCES UNLESS NOTED
X.XXX ± .13 | X ± 1.0
XXX-1500 ± .5 | XX ± .13
1500-6000 ± 1 | XXX ± .05
6000+ ± 12 | X.XXX ± .100
ANGLES ± 1°
SURFACE FINISH 64
THIRD ANGLE PROJECTION
DIMENSIONS (X) ARE REFERENCE
ALL GEOMETRIC DIMENSIONING & TOLERANCING PER ANSI Y14.5-2009

REV	DESCRIPTION	REV'D BY / DATE	APP'D BY / DATE

TITLE: SEGMENT HOIST

SIZE	DWG No.	REV	SHT	SCALE
D	1046722	0	1 of 3	1:20

DO NOT SCALE

DRAWN BY: V.HENCKEL
DATE: 3/30/12
CHECKED ENGINEER: D.WILSON
CHECKED TOOLING: D.WILSON
APPROVED BY: J.HEINEMAN
DATE: 4/3/12
WEIGHT TOLL

Robbins

www.TheRobbinsCompany.com

1046722

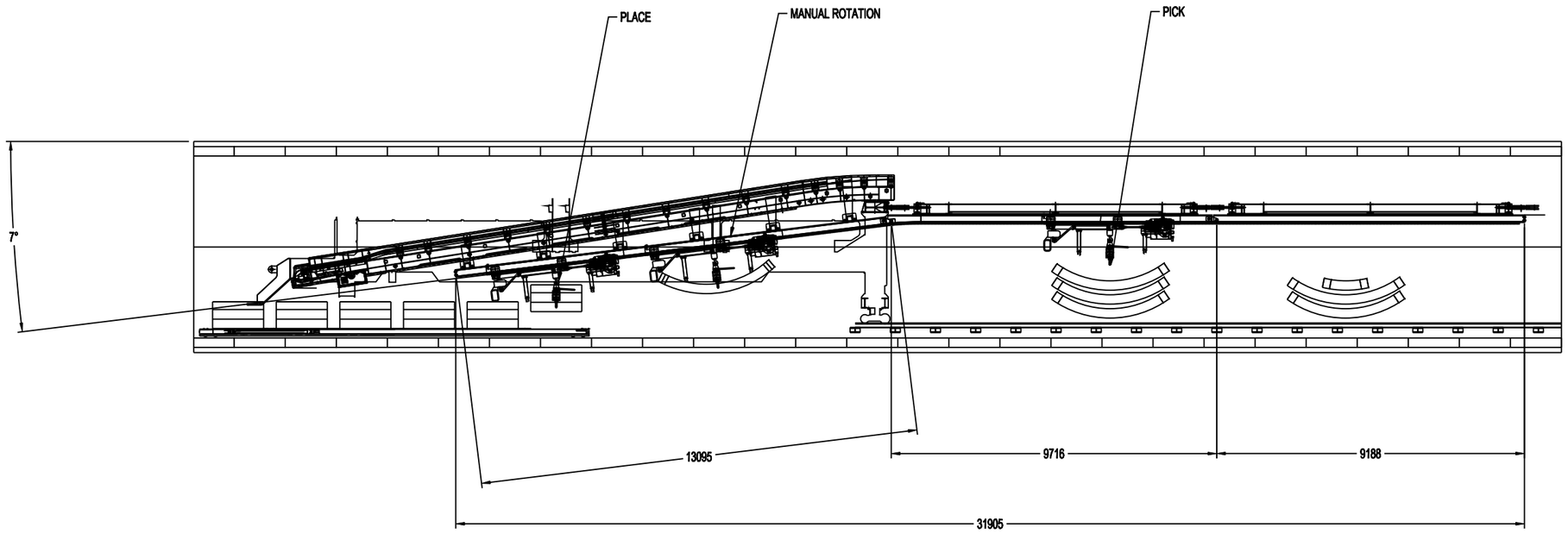

PICK, ROTATE, AND PLACE STEPS
SCALE 1:75

1046722

REV	DESCRIPTION	REV'D BY / DATE	APP'D BY / DATE

TITLE: SEGMENT HOIST

MACHINE	NEXT ASSY
EPB2016-376	
EPB2016-377	

UNLESS NOTED ALL DIMS ARE mm
TOLERANCES UNLESS NOTED

0-300	± 1.5	X	± 1.5
300-1500	± 3	X.X	± 1.0
1500-6000	± 6	X.XX	± .40
6000+	± 12	X.XXX	± .100
		ANGLES	± 1
		SURFACE FINISH	6.3

MACHINING TOLERANCES
DIMENSIONS (X) ARE REFERENCE
ALL GEOMETRIC DIMENSIONING & TOLERANCING PER ANSI Y14.5-2009

SIZE	DWG No.	REV	SHT	SCALE
D	1046722	0	2 OF 3	1:75

DO NOT SCALE

DRAWN BY: V.HENCKEL
DATE: 03/30/12
CHECKED STANDARDS: D.WILSON
CHECKED DESIGN: D.WILSON
WEIGHT TOTAL:
APPROVED BY: J.HEINEMAN
DATE: 04/03/12

Robbins

www.TheRobbinsCompany.com

PROPRIETARY NOTICE
The information disclosed herein, is the sole property of The Robbins Company, and shall not be used for any purpose other than the authorized bid or sale, used by, or disclosed to any other party without prior written consent of The Robbins Company. By accepting this information, recipient agrees to abide in total with the notice, without any modification whatsoever to the conditions. This material is not to be used, or used to be reproduced, copied, or transmitted in any way, without the prior written consent of The Robbins Company.

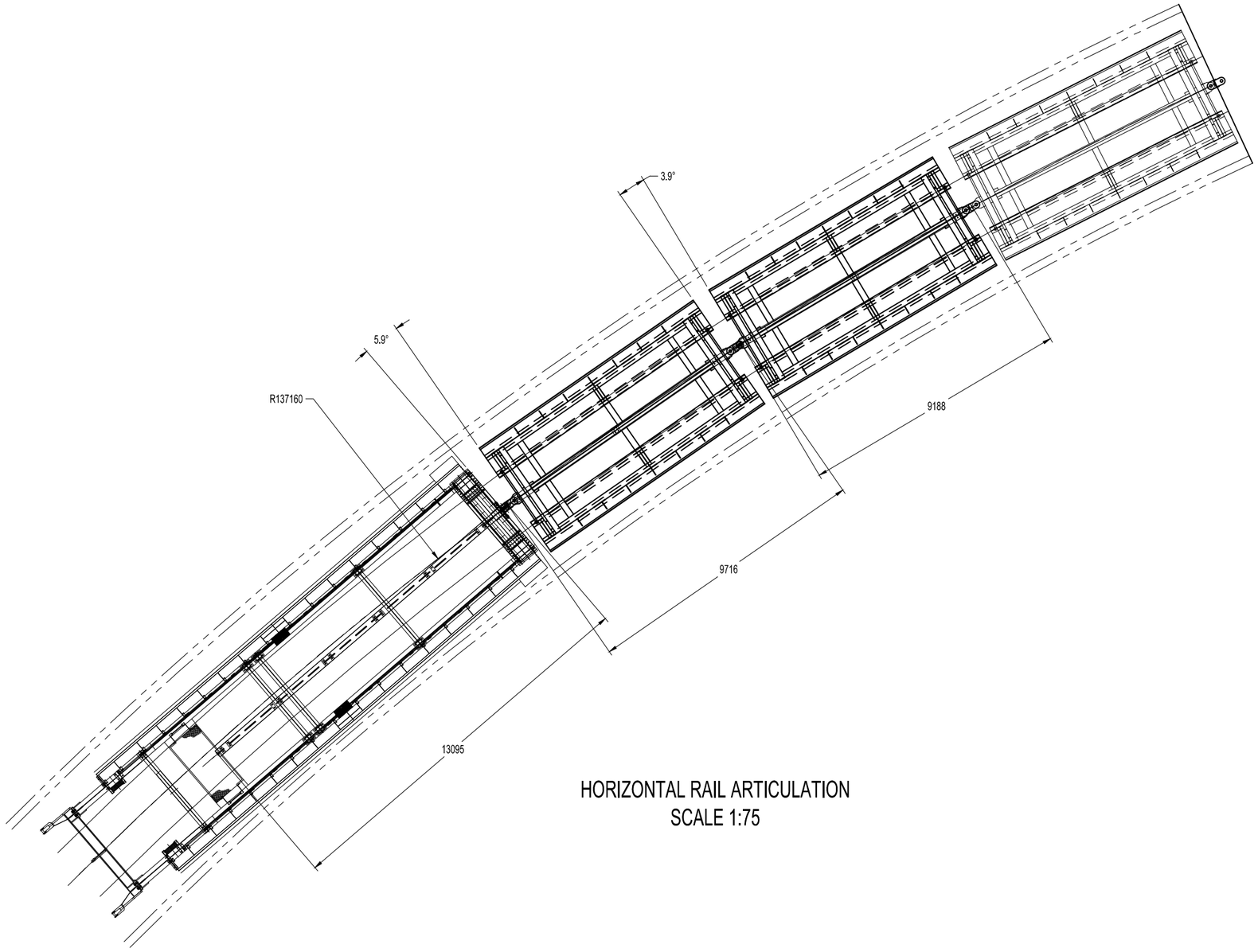

HORIZONTAL RAIL ARTICULATION
SCALE 1:75

1046722

REV	DESCRIPTION	REV'D BY / DATE	APP'D BY / DATE

TITLE: SEGMENT HOIST

MACHINE	NEXT ASSY
EPB2016-376	
EPB2016-377	

UNLESS NOTED ALL DIMS ARE mm
TOLERANCES UNLESS NOTED

0-300	± 1.5	X	± 1.5
300-1500	± 3	X.X	± 1.0
1500-6000	± 6	X.XX	± .40
6000+	± 12	X.XXX	± .100
		ANGLES	± 1
		SURFACE FINISH	1.5

MACHINING (mm)

DIMENSIONS DO ARE REFERENCE
ALL GEOMETRIC DIMENSIONING & TOLERANCING PER ANSI Y14.5-2009

SIZE	DWG No.	REV	SH	SCALE
D	1046722	0	3 OF 3	1:75

DO NOT SCALE

DRAWN BY: V.HENCKEL
DATE: 03/30/12
CHECKED STANDARDS: D.WILSON
CHECKED DESIGN: D.WILSON
WEIGHT TOTAL:
APPROVED BY: J.HEINEMAN
DATE: 04/03/12

Robbins

www.TheRobbinsCompany.com

PROPRIETARY NOTE:
The information disclosed herein is the sole property of The Robbins Company and remains the sole property of the Robbins Company. It shall not be disclosed to a third party without prior written consent of the Robbins Company. Reproduction, modification, or distribution of this information, in whole or in part, is prohibited without the prior written consent of the Robbins Company. Any accepting the information, recipient agrees to abide to the terms of this notice, without any modification or alteration of the information. This material is the property of the Robbins Company and is to be returned upon request to The Robbins Company.

MODEL EPB2016-376/377
SECTION 22 • Probe Drill Assembly

1. Probe drill layout
2. Probe drill assembly
3. Probe drill & feed assembly
4. Probe drill literature

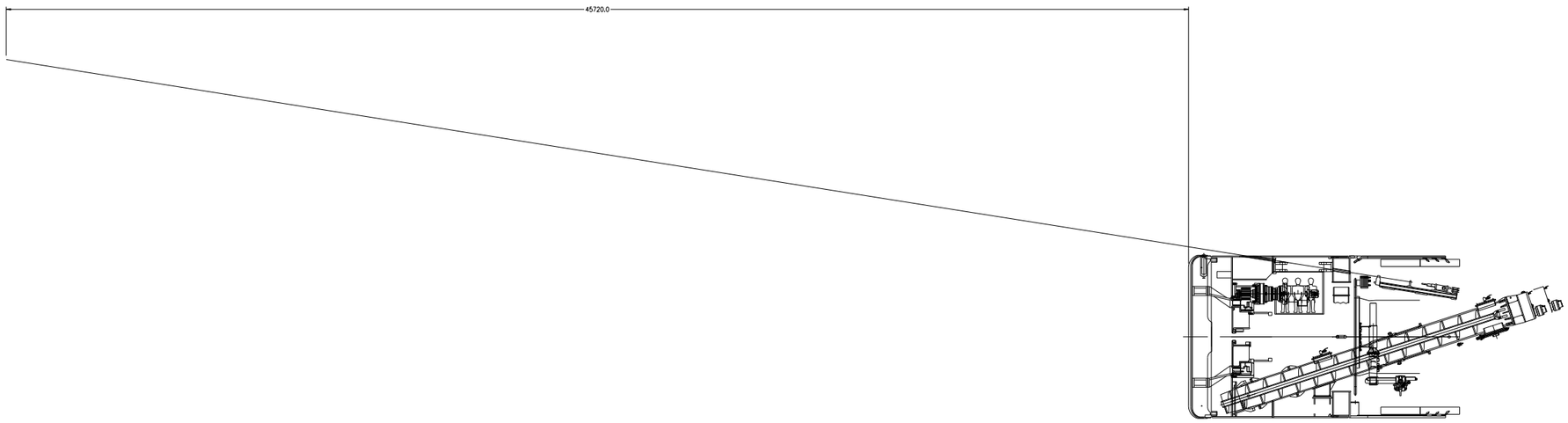
45720,0

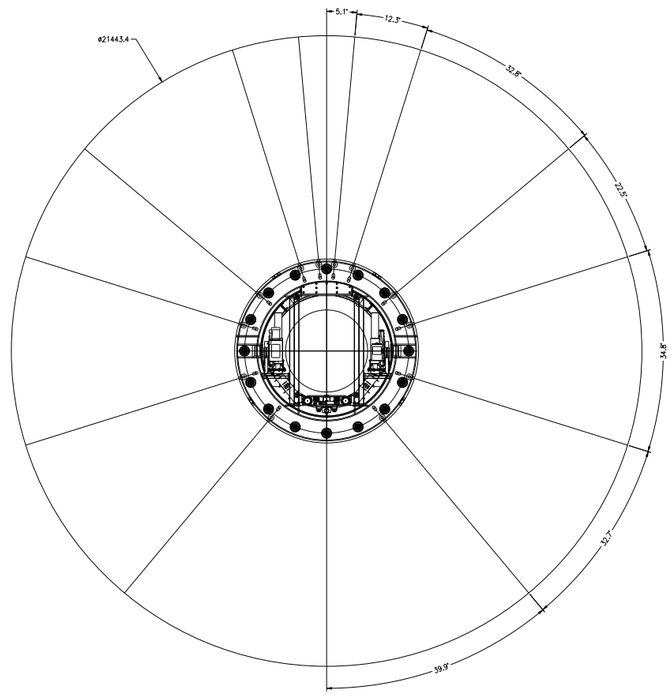
ø21443,4
5,1°
12,3°
32,8°
22,5°
34,8°
32,7°
59,9°

QTY	PART No.	DESCRIPTION	DWG No.	WT. Total (kgs)	ITEM
1	1035128	DRILL FEED, HD150	1035128	331.2	1
1	1026003	ROCK DRILL, HD150	1026003	68.0	2
1	1049712	PROBE DRILL LIFT CASING - MACH	1049712	212.9	3
1	1049656	BOTTOM CROSS SPT. - MACHINING	1049656	0.6	4
1	1049653	TOP CROSS SUPPORT - MACHINING	1049653	58.7	5
1	1049742	TAP PAD, ERECTOR	1049742	112.9	6
1	1049746	TAP PAD, BTM, ERECTOR	1049746	108.0	7
2	1049774	SUPPORT BRACKET	1049774	66.2	8
2	1035914	PROBE DRILL SLIDE ROD	1035914	72.7	9
1	1035931	CYL, Ø75mmB x Ø35mmR x Ø100mmS	1035931	9.7	10
4	1034859	PROBE DRILL SLIDE BUSH	1034859	6.8	11
4	1034863	DUST SEAL RETAINER, 100mm	1034863	2.9	12
4	1034875	DUST SEAL, 100mm	1034875	0.1	13
1	A79973-13	TURNBUCKLE 2X24"	A79973	59.4	14
1	D65173-070110	PIN, KEYBAR RETAINED Ø70x110mm	D65173	3.9	15
1	D65175-070	KEYBAR 96mm	D65175	0.2	16
1	D117322-200	BEARING, SPHERICAL Ø50.8mm	D117322	1.0	17
1	627-014	NUT, JAM Ø2"-4.5 UNC G5		0.8	18
3	651-220	FITTING, GREASE Ø1/8" NPT		0.0	19
2	A22152-40308	HHCS, M12x30mm C10.9	A22152	0.1	20
12	A22152-40708	HHCS, M12x70mm C10.9	A22152	1.0	21
24	A22152-50708	HHCS, M16x70mm C10.9	A22152	3.6	22
17	A22152-60758	HHCS, M20x75mm C10.9	A22152	4.4	23
24	A22153-10208	SHCS, M6x20mm C10.9	A22153	0.2	24
8	615-149	SHSS, M8x12mm CONE PT		0.0	25
14	A22158-4	WASHER, HD NW OD M12	A22158	0.1	26
24	A22158-5	WASHER, HD NW OD M16	A22158	0.4	27
17	A22158-6	WASHER, HD NW OD M20	A22158	0.4	28

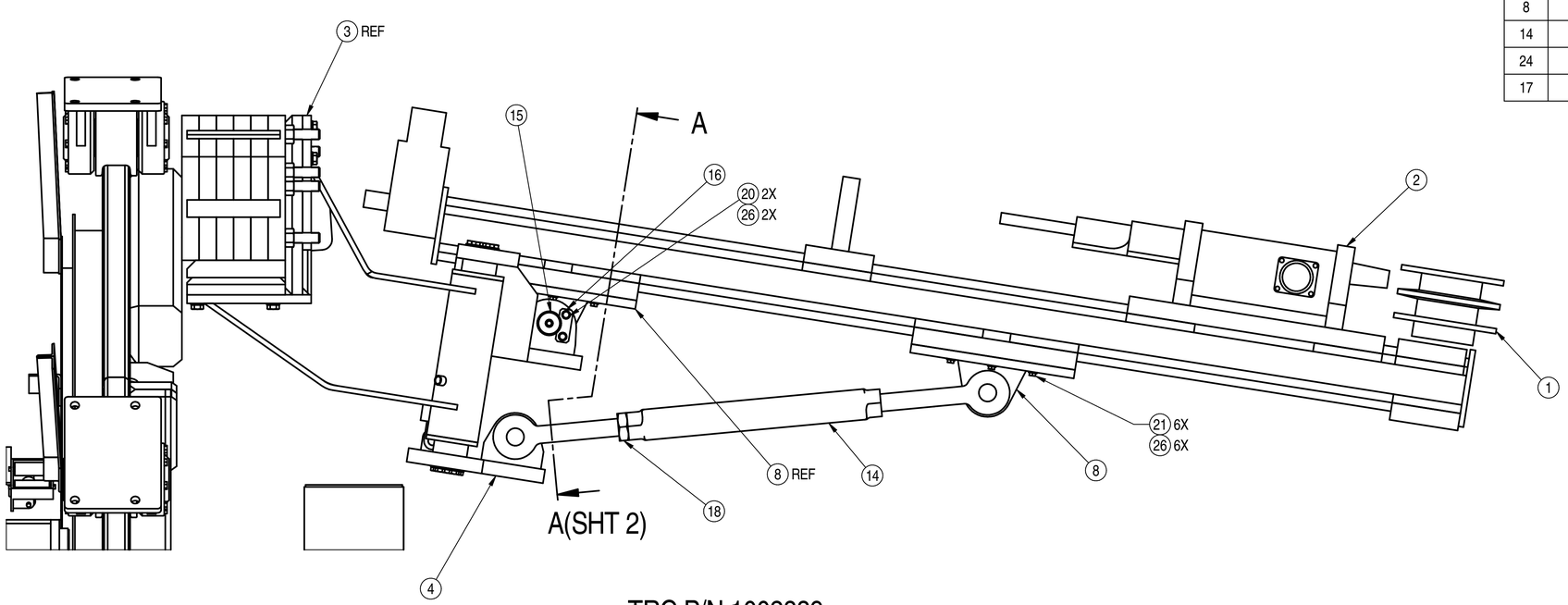

TRC P/N 1002839
PROBE DRILL ASSEMBLY

NOTES:

1. REMOVE ALL BURRS & BREAK SHARP EDGES.
2. STEEL STAMP OR ELECTRO-ETCH PART NUMBER, P.O. NUMBER & VENDOR I.D. CODE ON PART WITH 30mm MIN. HIGH CHARACTERS.

PROPRIETARY NOTICE
The information disclosed hereon, is the sole property of The Robbins Company, and remains their sole property. It shall not be duplicated in full or part, used by, or disclosed to any other party without prior written consent of The Robbins Company. By accepting this information, recipient agrees to abide in total with this notice, without any modification whatsoever to the conditions. This material is on loan only, and is to be returned upon request to The Robbins Company.

MACHINE	NEXT ASSY
EPB2016-376	1002830
EPB2016-377	

UNLESS NOTED ALL DIMS ARE mm

TOLERANCES UNLESS NOTED

FAB (mm)		MACHINING (mm)	
0-300	±1.5	X	±1.5
300-1500	±3	X.X	±1.0
1500-6000	±6	X.XX	±0.40
6000+	±12	X.XXX	±0.100
		ANGLES	±1°
THIRD ANGLE PROJECTION		SURFACE FINISH	6.3

DIMENSIONS (X) ARE REF

ALL GEOMETRIC DIMENSIONING & TOLERANCING PER ANSI Y14.5-2009

REV	DESCRIPTION	REV'D BY/ DATE	APP'D BY/ DATE

TITLE: PROBE DRILL ASSEMBLY

SIZE: D | DWG No.: 1002839 | REV: 0 | SHT 1 OF 2 | SCALE: 1:8 | DO NOT SCALE

DRAWN BY: JSPRAGUE | DATE: 6/26/2012 | CHECKED STANDARDS: B.WAKELEE | CHECKED DESIGN: B.WAKELEE

UNIT OF MEASURE: Each | WEIGHT TOTAL: 1435.6 kg | APPROVED BY: JHEINEMAN | DATE: 7/12/2012

Robbins

www.TheRobbinsCompany.com

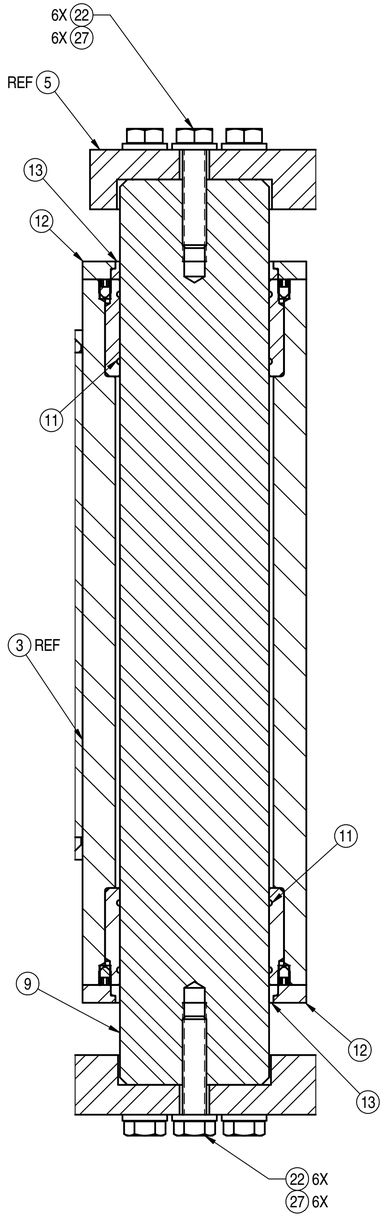

SECTION C-C
SCALE 1:2
TYP 2 PLACES

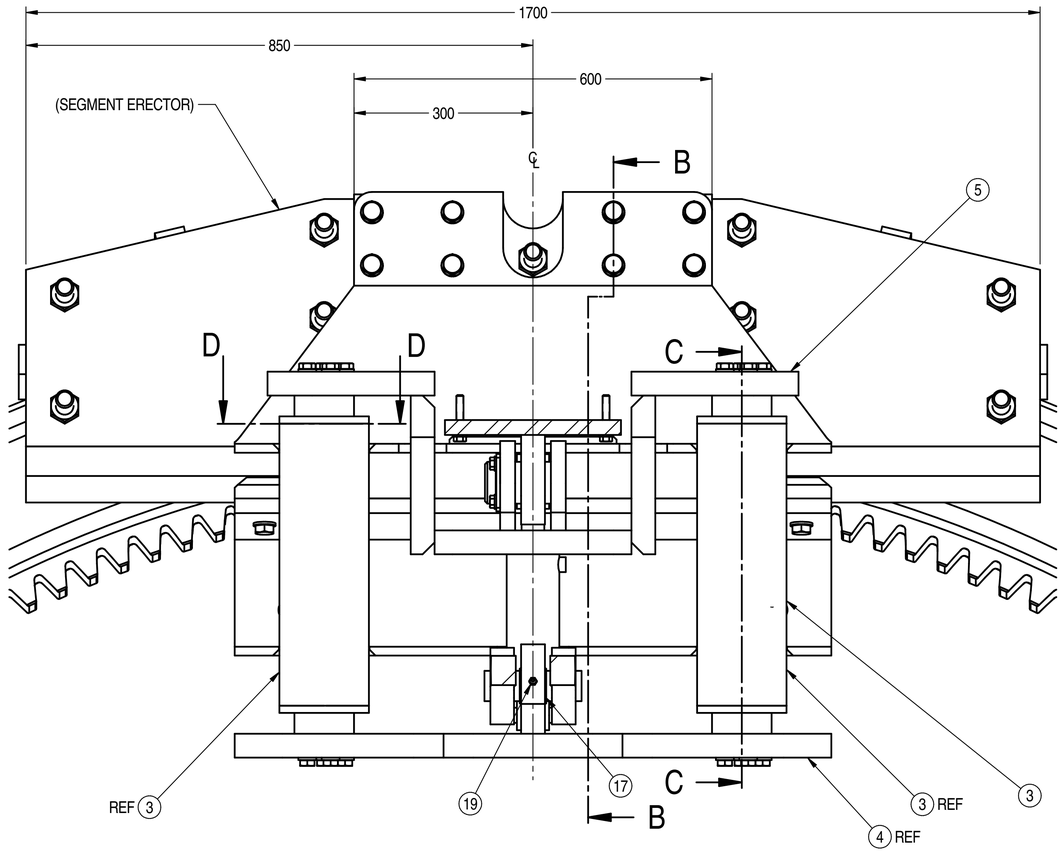

SECTION A-A (SHT 1)
SCALE 1:5 ↶9.0°

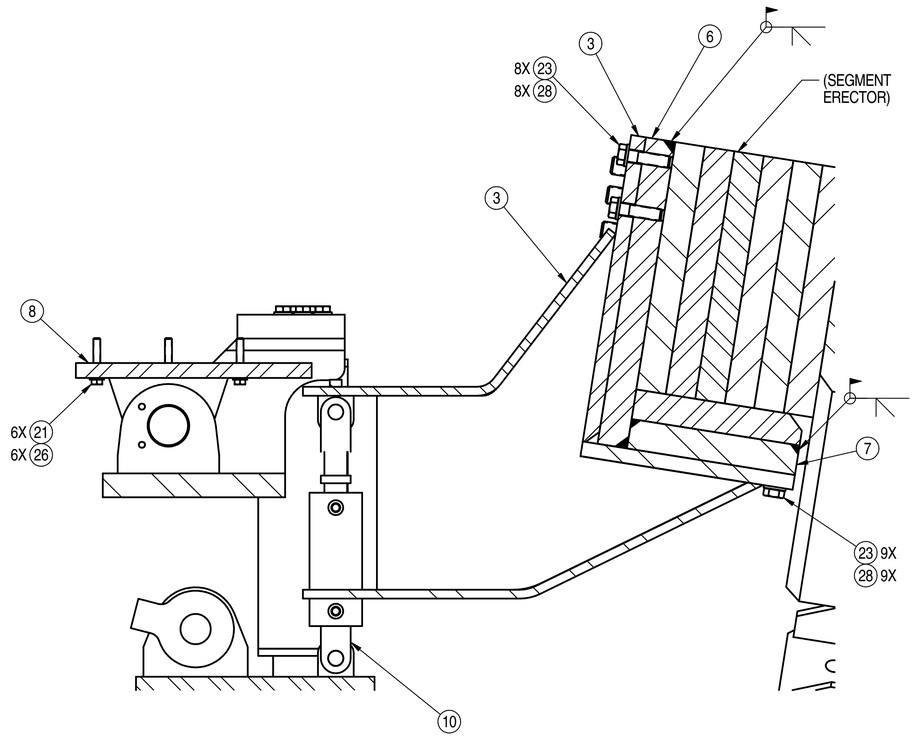

SECTION B-B
SCALE 1:5

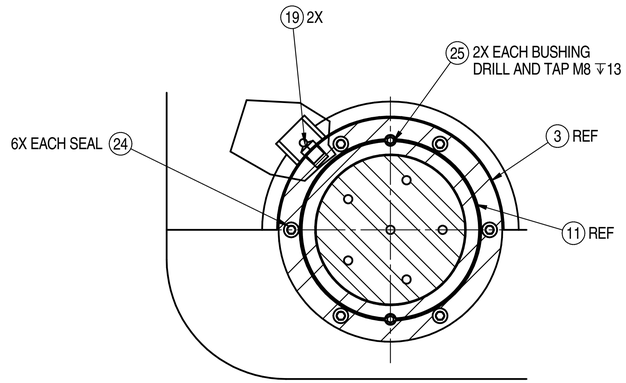

SECTION D-D
SCALE 1:2

REV	DESCRIPTION	REV'D BY/ DATE	APP'D BY/ DATE

TITLE: PROBE DRILL ASSEMBLY

MACHINE	NEXT ASSY
EPB2016-376	1002830
EPB2016-377	

UNLESS NOTED ALL DIMS ARE mm

TOLERANCES UNLESS NOTED

FAB (mm)		MACHINING (mm)	
0-300	±1.5	X	±1.5
300-1500	±3	X.X	±1.0
1500-6000	±6	X.XX	±0.40
6000+	±12	X.XXX	±0.100
		ANGLES	±1°
THIRD ANGLE PROJECTION		SURFACE FINISH	6.3

DIMENSIONS (X) ARE REF

ALL GEOMETRIC DIMENSIONING & TOLERANCING PER ANSI Y14.5-2009

SIZE: D | DWG No.: 1002839 | REV: 0 | SHT 2 OF 2 | SCALE: 1:1 | DO NOT SCALE

DRAWN BY: JSPRAGUE | DATE: 6/26/2012 | CHECKED STANDARDS: B.WAKELEE | CHECKED DESIGN: B.WAKELEE

UNIT OF MEASURE: Each | WEIGHT TOTAL: 1435.6 kg | APPROVED BY: JHEINEMAN | DATE: 7/12/2012

Robbins

www.TheRobbinsCompany.com

PROPRIETARY NOTICE
The information disclosed hereon, is the sole property of The Robbins Company, and remains their sole property. It shall not be duplicated in full or part, used by, or disclosed to any other party without prior written consent of The Robbins Company. By accepting this information, recipient agrees to abide in total with this notice, without any modification whatsoever to the conditions. This material is on loan only, and is to be returned upon request to The Robbins Company.

HYDRAULIC ROCK DRILL - BOART HD 15O, A4 MOTOR.
VARIABLE AND REVERSIBLE ROTATION MOTOR. 11kW IMPACT POWER.
ROTATION SPEED: 0 - 304rpm.
ROTATION TORQUE: 524Nm MAX.
FLUSHING WATER: 37 L/min. LUBRICATION AIR 2 L/s.
R32 SHANK ADAPTER.

SOURCE: DSI underground Systems, Inc
Contact: Bobby Cannon,
email : bobby.cannon@dsiuunderground.com

EQUIVALENT ALTERNATE PERMITTED WITH ROBBINS ENGINEERING APPROVAL ONLY.
VENDOR TO SUPPLY DETAILED, DIMENSIONED ASSEMBLY DRAWINGS
INCLUDING PARTS LIST, SPARES LIST, AND WEIGHTS, BEFORE ORDER IS PLACED.

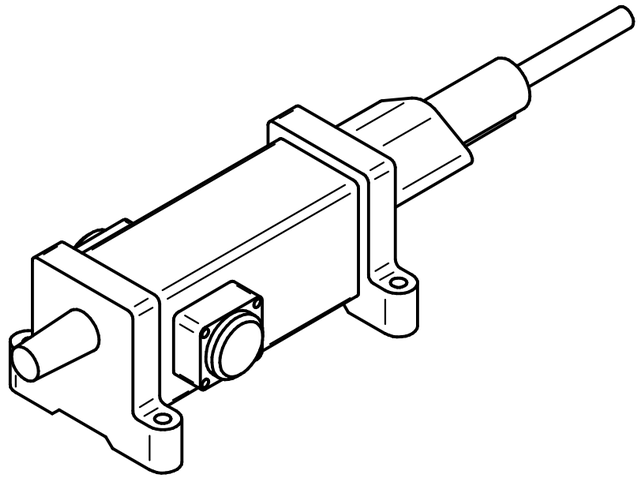

TRC P/N 1026003
ROCK DRILL
1:8

1026003

BY/ DATE | DESCRIPTION | REV

PROPRIETARY NOTICE
The information disclosed hereon, is the sole property of The Robbins Company, and remains their sole property. It shall not be duplicated in full or part, used by, or disclosed to any other party without prior written consent of The Robbins Company. By accepting this information, recipient agrees to abide in total with this notice, without any modification whatsoever to the conditions. This material is on loan only, and is to be returned upon request to The Robbins Company

MACHINE	NEXT ASSY
EPB2110-365	1002649

UNLESS NOTED ALL DIMS ARE mm
TOLERANCES UNLESS NOTED

FAB (mm)		MACHINING (mm)	
0-300	±1.5	X	±1.5
300-1500	±3	X.X	±1.0
1500-6000	±6	X.XX	±.40
6000+	±12	X.XXX	±.100
		ANGLES	±1°
		SURFACE FINISH	3.2

DIMENSIONS (X) ARE REF
ALL GEOMETRIC DIMENSIONING & TOLERANCING PER ANSI Y14.5M-1982 AS APPLICABLE.

TITLE: ROCK DRILL, HD150

SIZE	DWG No.	REV	SHT OF	SCALE:
B	1026003	0	1 / 1	SEE DETAIL - DO NOT SCALE

DRAWN	CHECKED
C.ROHDE	J.HEINEMAN
DATE 12/12/2011	DATE 12/13/2011
THIRD ANGLE PROJECTION	APPROVED J.HEINEMAN
WEIGHT TOTAL: 68.0 kg	DATE 12/14/2011

Robbins

HYDRAULIC FEED ASSEMBLY FOR BOART HD150 ROCK DRILL
INCLUDING THE FOLLOWING:

- EXTENSION DRILLING KIT WITH REMOTE CONTROLS, BUSHINGS, VALVES, AND MOUNTING KIT.

- MOUNTING KIT FOR MOUNTING FEED ASSY TO BOOM.

- RIGHT SIDE HOSE MOUNT, HOSE DRUM, HOSES, FITTINGS FOR OPERATION OF DRILL AND FEED CYLINDER.

- MOUNTING PLATE FOR HD150.

OVERALL LENGTH NOT TO EXCEED 3300mm.

DRILL STEEL LENGTH 1500mm.

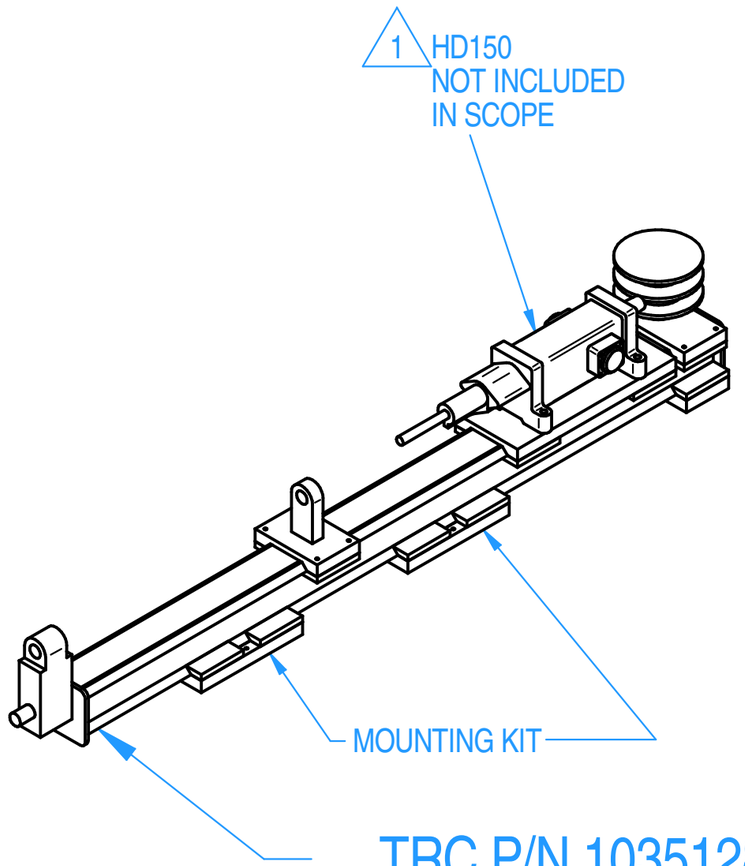

TRC P/N 1035128
DRILL FEED, HD150
1:20

1035128

REV	DESCRIPTION	BY/ DATE
1	CHANGED DRILL TYPE ADDED SHEET 2	CR 12/12/11

PROPRIETARY NOTICE
The information disclosed hereon, is the sole property of The Robbins Company, and remains their sole property. It shall not be duplicated in full or part, used by, or disclosed to any other party without prior written consent of The Robbins Company. By accepting this information, recipient agrees to abide in total with this notice, without any modification whatsoever to the conditions. This material is on loan only, and is to be returned upon request to The Robbins Company.

MACHINE	NEXT ASSY
EPB2110-365	1002649

UNLESS NOTED ALL DIMS ARE mm

TOLERANCES UNLESS NOTED

FAB (mm)		MACHINING (mm)	
0-300	±1.5	X	±1.5
300-1500	±3	X.X	±1.0
1500-6000	±6	X.XX	±.40
6000+	±12	X.XXX	±.100
		ANGLES	±1°
		SURFACE FINISH	3.2

DIMENSIONS (X) ARE REF

ALL GEOMETRIC DIMENSIONING & TOLERANCING PER ANSI Y14.5M-1982 AS APPLICABLE.

TITLE: DRILL FEED, HD150

SIZE	DWG No.	REV	SHT	SCALE:
B	1035128	1	OF 1/2	SEE DETAIL - DO NOT SCALE

DRAWN	CHECKED
C.ROHDE	J.HEINEMAN
DATE 10/14/2011	DATE 10/17/2011
THIRD ANGLE PROJECTION	APPROVED J.HEINEMAN
WEIGHT TOTAL: 633.0 kg	DATE 10/17/2011

Robbins

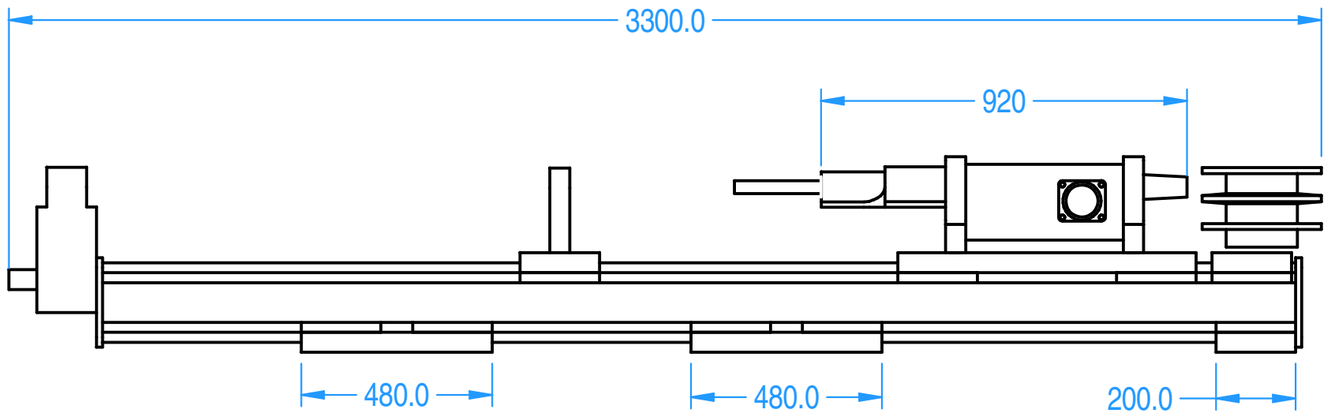

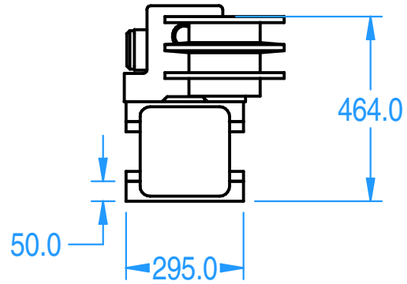

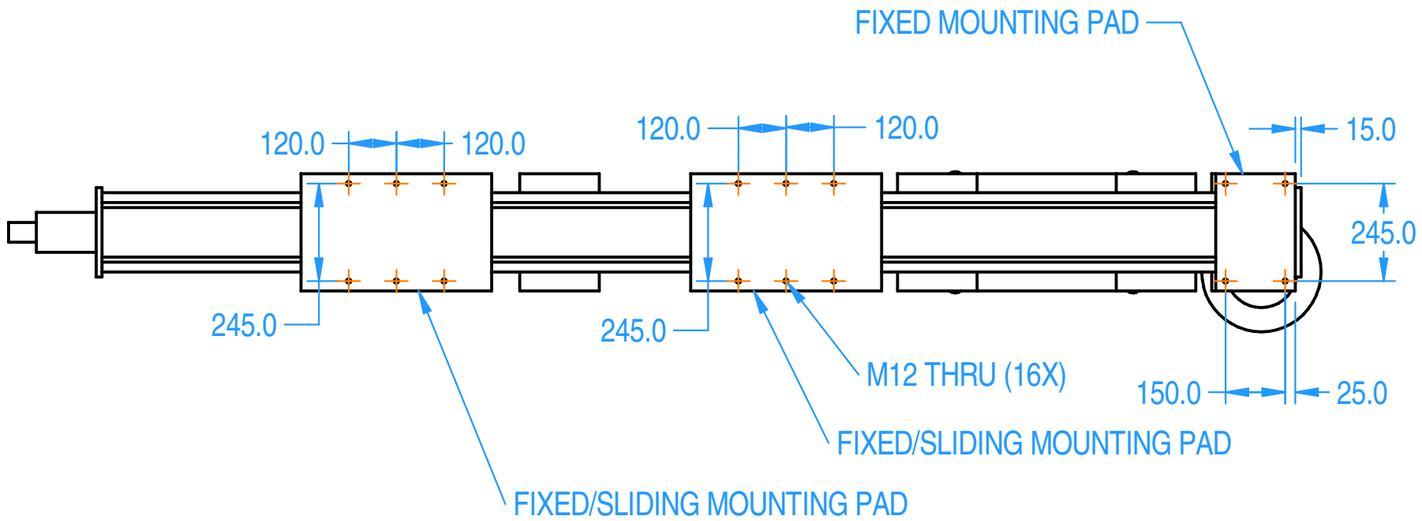

CR	BY/ DATE	DESCRIPTION	REV
ADDED SHEET 2	12/12/11		1

PROPRIETARY NOTICE
The information disclosed hereon, is the sole property of The Robbins Company, and remains their sole property. It shall not be duplicated in full or part, used by, or disclosed to any other party without prior written consent of The Robbins Company. By accepting this information, recipient agrees to abide in total with this notice, without any modification whatsoever to the conditions. This material is on loan only, and is to be returned upon request to The Robbins Company.

MACHINE	NEXT ASSY
EPB2110-365	1002649

UNLESS NOTED ALL DIMS ARE mm

TOLERANCES UNLESS NOTED

FAB (mm)		MACHINING (mm)	
0-300	±1.5	X	±1.5
300-1500	±3	X.X	±1.0
1500-6000	±6	X.XX	±.40
6000+	±12	X.XXX	±.100
		ANGLES	±1°
		SURFACE FINISH	3.2

DIMENSIONS (X) ARE REF

ALL GEOMETRIC DIMENSIONING & TOLERANCING PER ANSI Y14.5M-1982 AS APPLICABLE.

TITLE

DRILL FEED, HD150

SIZE	DWG No.	REV	SHT OF	SCALE:
B	1035128	1	2 / 2	SEE DETAIL - DO NOT SCALE

DRAWN	CHECKED
C.ROHDE	J.HEINEMAN
DATE 10/14/2011	DATE 10/17/2011
THIRD ANGLE PROJECTION	APPROVED J.HEINEMAN
WEIGHT TOTAL: 633.0 kg	DATE 10/17/2011

Robbins

www.TheRobbinsCompany.com

1035128

Section 23 – Conveyor Assembly and Overland Conveyor Layout

QTY	PART No.	DESCRIPTION	DWG No.	WT. Total	ITEM
REF.	1050889	CONVEYOR ELECTRICAL SYSTEM	1050889	-	36
REF.	1050891	E-STOP PULL CORD SYSTEM	1050891	-	37

FOUNDATION LOADS AND OVERALL LAYOUT	1046891 SHEET #1
CONVEYOR EQUIPMENT	
30" BW SINGLE 200 HP MAIN DRIVE ASSEMBLY P/N 1049101 30" BW DRIVE STAND / SPLICE STAND ASSEMBLY P/N 1049343	1046891 SHEET #2
30" BW DISCHARGE ASSEMBLY (NORTH BOUND) P/N 1049918	1046891 SHEET #3
30" BW DISCHARGE ASSEMBLY (SOUTH BOUND) P/N 1049409	1046891 SHEET #4
30" BW STORAGE CASSETTE - 2000'-0" CAPACITY (NORTH BOUND) P/N 1048955	1046891 SHEET #5
30" BW STORAGE CASSETTE - 2000'-0" CAPACITY (SOUTH BOUND) P/N 1048537	1046891 SHEET #6
BELT CASSETTE WINCH ASSEMBLY (NORTH BOUND) P/N 4001339	1046891 SHEET #7
BELT CASSETTE WINCH ASSEMBLY (SOUTH BOUND) P/N 4001339	1046891 SHEET #8
30" BW TRIPPER ASSY - 3.2° (NORTH BOUND) P/N 1051534	1046891 SHEET #9
30" BW TRIPPER ASSY - 4.5° (SOUTH BOUND) P/N 1050505	1046891 SHEET #10
30" BW SINGLE 200 HP CARRYING BOOSTER DRIVE ASSEMBLY (NORTH BOUND) P/N 1051295	1046891 SHEET #11
30" BW SINGLE 200 HP CARRYING BOOSTER DRIVE ASSEMBLY (SOUTH BOUND) P/N 1051235	1046891 SHEET #12
30" BW SINGLE 100 HP RETURN BOOSTER DRIVE ASSEMBLY (NORTH BOUND) P/N 1051296	1046891 SHEET #13
30" BW SINGLE 100 HP RETURN BOOSTER DRIVE ASSEMBLY (SOUTH BOUND) P/N 1051260	1046891 SHEET #14
30" BW KNEE BRACE ASSEMBLY P/N 1049364	1046891 SHEET #15
REACTION LOADS ON BACKUP	
30" BW RH TAIL PIECE AND BOOM (NORTH BOUND) P/N 1049040	1046891 SHEET #16
30" BW LH TAIL PIECE AND BOOM (SOUTH BOUND) P/N 1049155	1046891 SHEET #17

QTY	PART No.	DESCRIPTION	DWG No.	WT. Total	ITEM
1	1049155	30" BW LH TAILPIECE AND BOOM ASSY	1049155	21,396.0 LB'S	20
2	1049416	Ø120" BELT ROLL STAND ASSY.	1049416	3,530.6 LB'S	21
44	1047211	30" BW RETURN ALIGNMENT LAYOUT	1047211	1,901.3 LB'S	22
106	1050410	30"BW CURVE STRUCTURE (400' TO 499' RADIUS)	1050410	48,155.8 LB'S	23
20	1046680	30" BW CURVE STRUCTURE (750' TO 949' RADIUS)	1046680	9,070.0 LB'S	24
25	1046677	30" BW CURVE STRUCTURE (1700' TO 2499' RADIUS)	1046677	11,302.5 LB'S	25
33	1046682	30" BW CURVE STRUCTURE (2500' TO 3999' RADIUS)	1046682	14,906.1 LB'S	26
67	1050327	30" BW CURVE STRUCTURE (4000' TO 7250' RADIUS)	1050327	30,327.0 LB'S	27
10	1046683	30" BW CURVE STRUCTURE (7250' TO 17250' RADIUS)	1046683	4,508.0 LB'S	28
882	1046678	30" BW TYPICAL STRUCTURE	1046678	243,873.0 LB'S	29
1144	1049364	30" BW KNEE BRACE ASSY	1049364	42,118.9 LB'S	30
24	1049756	30" BW 600 PIW FABRIC BELT (1500' ROLLS)	1049756	11,000.0 LB'S	31
2	A85139-1	30" BW CONVEYOR BELTING SPLICING TOOL KIT	A85139	40.0 LB'S	32
2	1049779	30" BW CONVEYOR BELT VULCANIZER	1049779	1,224.0 LB'S	33
2	D85184-1	WASHING BOX ASSY 762mm CONVEYOR BELT	D86284	604.0 LB'S	34
2	D86283-1	24"-36" BW 16 DEGREE SPLICINGTEMPLATE	D86283	52.0 LB'S	35
2	4001162	36"BW MOBILE BELT CLAMP	D86283	404.0 LB'S	36
2	1049781	30" BW TOW PLATE ASSY	1049781	103.4 LB'S	37

QTY	PART No.	DESCRIPTION	DWG No.	WT. Total	ITEM
2	1049101	30" BW MAIN DRIVE ASSY SINGLE 200 HP	1049101	24,070.0 LB'S	1
2	1049343	30" BW SPLICE STAND ASSY	1049343	34,425.4 LB'S	2
1	1048537	30" BW BELT CASSETTE ASSY - 2000'-0" CAPACITY (SB)	1048537	83,275.9 LB'S	3
1	1048955	30" BW BELT CASSETTE ASSY - 2000'-0" CAPACITY (NB)	1048955	83,275.9 LB'S	4
1	1050505	SB 30" BW TRIPPER ASSY - 4.5°	1050505	15,490.3LB'S	5
1	1051534	NB 30" BW TRIPPER ASSY - 3.2°	1051534	18,269.3 LB'S	6
1	1049918	NB CONVEYOR 30" BW DISCHARGE ASSY	1049918	9,447.0 LB'S	7
1	1049409	SB CONVEYOR 30" BW DISCHARGE ASSY	1049409	10,040.0 LB'S	8
1	1051295	30" BW CARRY BOOSTER ASSY SINGLE 200HP (NORTH BOUND)	1051295	14,710.0 LB'S	9
1	1051235	30" BW CARRY BOOSTER ASSY SINGLE 200HP (SOUTH BOUND)	1051235	14,710 LB'S	10
1	1051296	30" BW RETURN BOOSTER ASSY SINGLE 100HP (NORTH BOUND)	1051296	11,469.1 LB'S	11
1	1051260	30" BW RETURN BOOSTER ASSY SINGLE 100HP (SOUTH BOUND)	1051260	11,469.1 LB'S	12
1	1052438	30" BW CARRY BOOSTER INSTALLATION KIT (NORTH BOUND)	1052438	3,591.1 LB'S	13
1	1052518	SB CONVEYOR 30" BW RETURN BOOSTER STRUCTURE KIT	1052518	1,787.3 LB'S	14
1	1052840	30" BW CARRY BOOSTER INSTALLATION KIT (SOUTH BOUND)	1052840	3,591.1 LB'S	15
1	1052891	NB CONVEYOR 30" BW RETURN BOOSTER STRUCTURE KIT	1052891	1,787.3 LB'S	16
1	1050905	30" BW CHAMBER STRUCTURE (NORTH BOUND)	1050905	13,943.0 LB'S	17
1	1050024	30" BW CHAMBER STRUCTURE (SOUTH BOUND)	1050024	13,351.0 LB'S	18
1	1049040	30" BW RH TAILPIECE AND BOOM ASSY	1049040	21,396.0 LB'S	19

MATERIAL FLOW

NOTE: NORTH BOUND TUNNEL

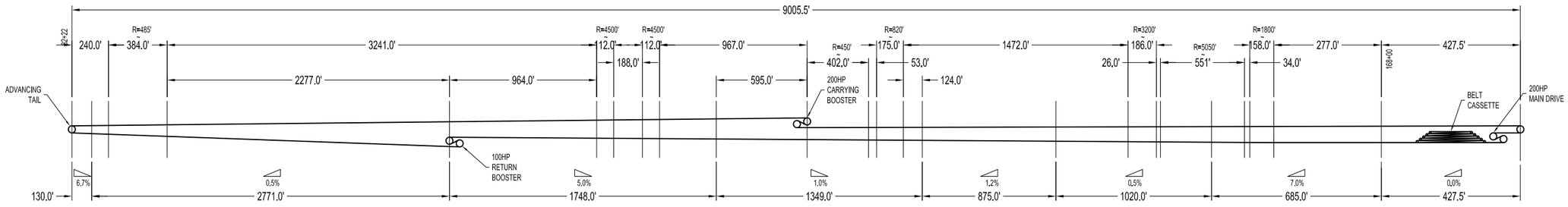

MATERIAL FLOW

NOTE: SOUTH BOUND TUNNEL

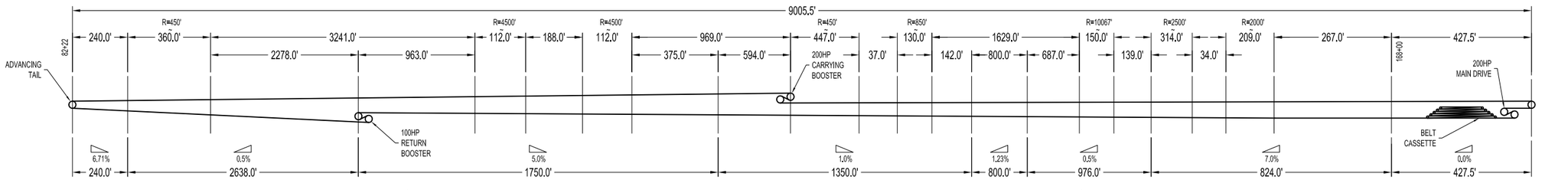

CONVEYOR SPECIFICATIONS - NORTH BOUND TUNNEL

BELT WIDTH = 30"
BELT SPEED = 600 FPM
CAPACITY = 500TPH
TOTAL LENGTH = 9005.5'
TOTAL STRAIGHT = 6925.5'
TOTAL CURVE = 2080'
STARTING TIME = 45 SEC.
TEMPERATURE = 50° F
BELT SAG = 2%
BELT WEIGHT = 7.9 LB'S/FT
IDLER SPACING = 7.5' & 15.0'

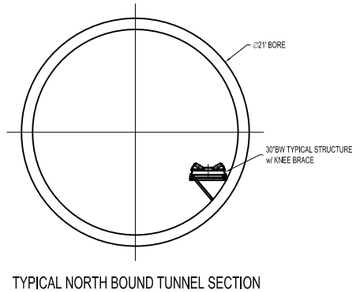

TYPICAL NORTH BOUND TUNNEL SECTION

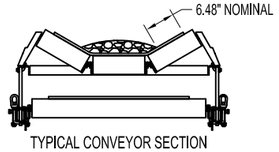

TYPICAL CONVEYOR SECTION

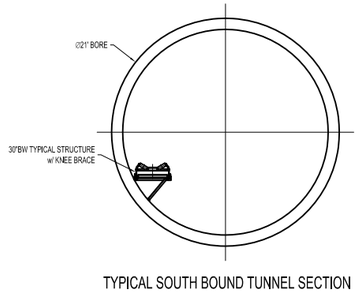

TYPICAL SOUTH BOUND TUNNEL SECTION

CONVEYOR SPECIFICATIONS - SOUTH BOUND TUNNEL

BELT WIDTH = 30"
BELT SPEED = 600 FPM
CAPACITY = 500TPH
TOTAL LENGTH = 9005.5'
TOTAL STRAIGHT = 7171.5'
TOTAL CURVE = 1834'
STARTING TIME = 45 SEC.
TEMPERATURE = 50° F
BELT SAG = 2%
BELT WEIGHT = 7.9 LB'S/FT
IDLER SPACING = 7.5' & 15.0'

PROPRIETARY NOTICE
The information disclosed on this drawing is the property of The Robbins Company, and remains their sole property. It shall not be copied, used, or disclosed to others for any purpose without prior written consent of The Robbins Company. Any such copies made must contain the same proprietary notice as is contained on the original drawing. Recipient agrees to abide in good faith with this notice without any modification. Recipient agrees to return this drawing upon request by The Robbins Company, and to be responsible for any loss or damage caused by its loss.

REV	DESCRIPTION	REV'D BY/ DATE	APP'D BY/ DATE

TITLE: S.F. CENTRAL SUBWAY CONVEYOR LAYOUT

MACHINE	NEXT ASSY
SF SUBWAY	

UNLESS NOTED ALL DIMS ARE inch
TOLERANCES UNLESS NOTED
FRACTIONS ±1/16 | X ±.03 | .XX ±.015 | .XXX ±.005 | ANGLES ±1° | SURFACE FINISH 125
MACHINING Basic
FOLD Thick: 0 - 1" ± 1/16 | 1" - 5" ± 1/8 | 5" - 20" ± 1/4 | 20" + ± 1/2
THIRD ANGLE PROJECTION
DIMENSIONS IN () ARE REFERENCE
ALL GEOMETRIC DIMENSIONING & TOLERANCING PER ANSI Y14.5-2009

SIZE	DWG NO.	REV
D	1049679	0

SHT 1 OF 2 | SCALE 1:2 | DO NOT SCALE

DRAWN BY: C. BESS DATE 06/7/12
CHECKED STANDARDS T. BESS
CHECKED DESIGN T. BESS
APPROVED BY T. BESS DATE 10/16/12
WEIGHT TOTAL 834,615.4 LB'S

Robbins

www.TheRobbinsCompany.com

1049679

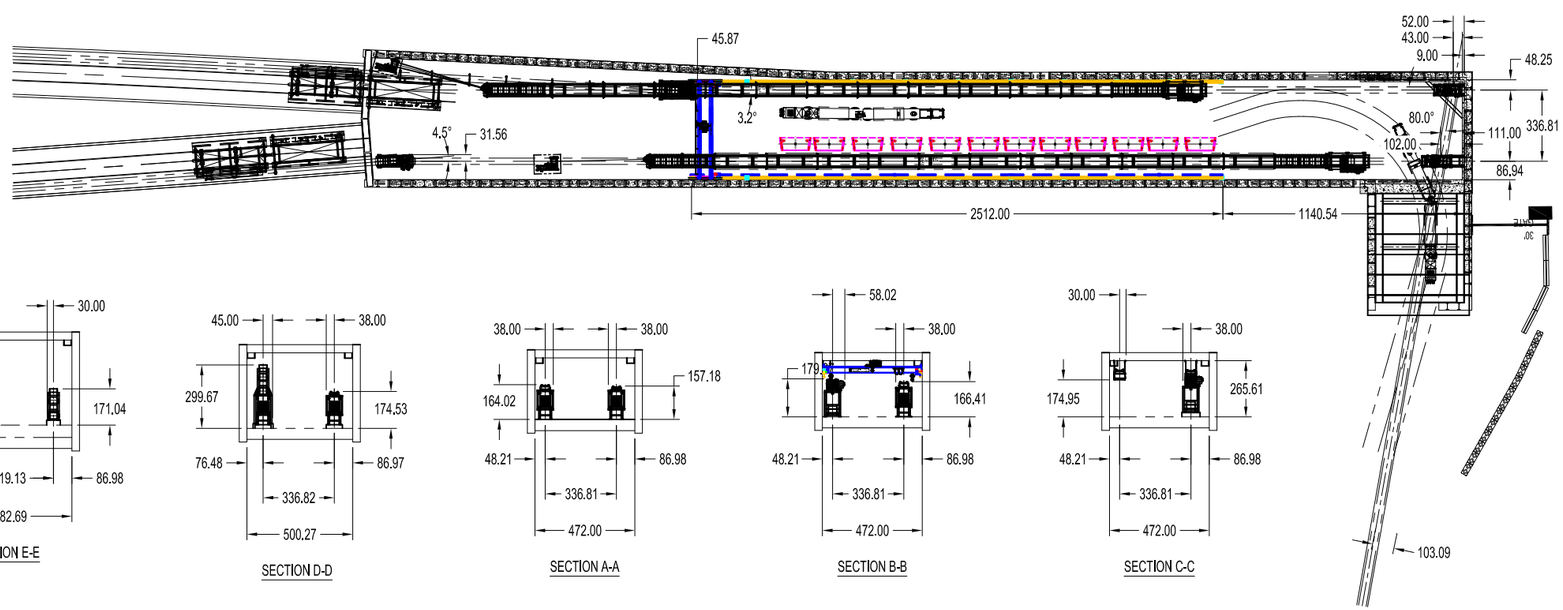

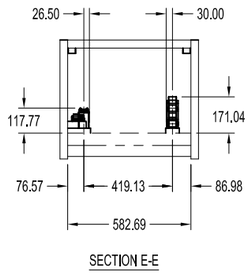

SECTION E-E

SECTION D-D

SECTION A-A

SECTION B-B

SECTION C-C

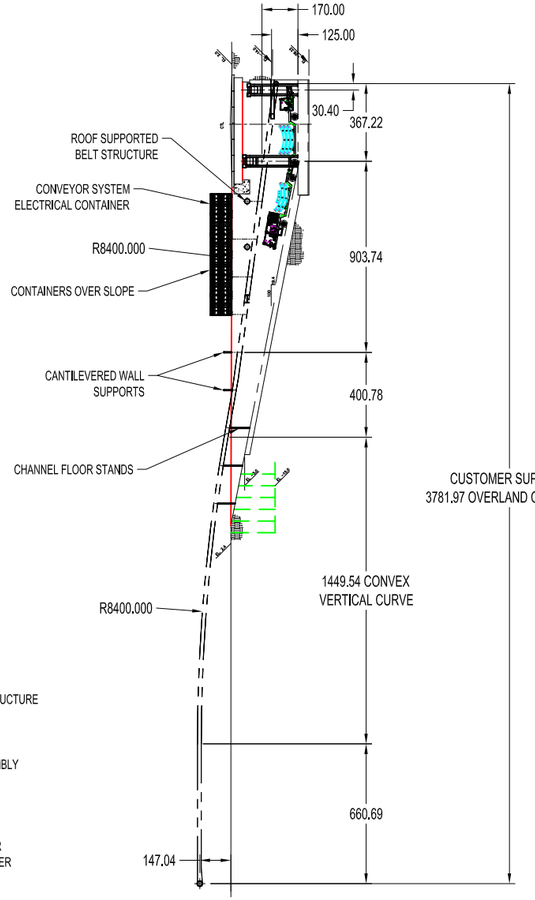

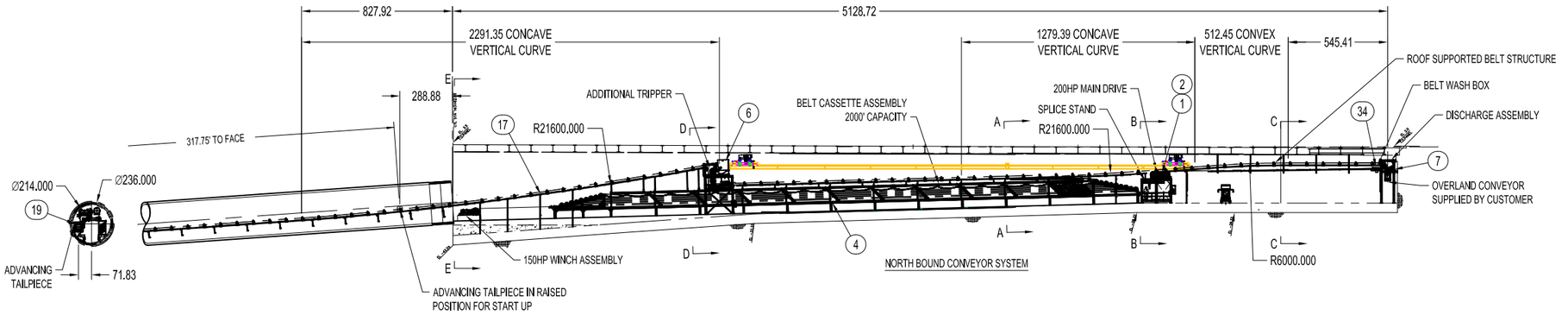

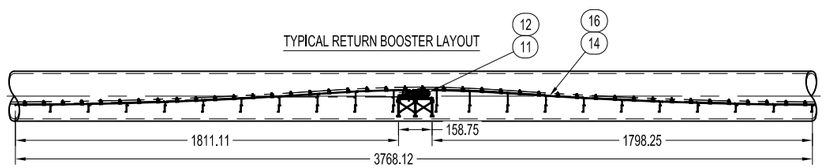

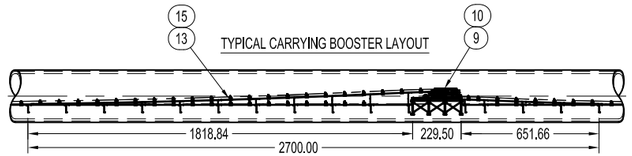

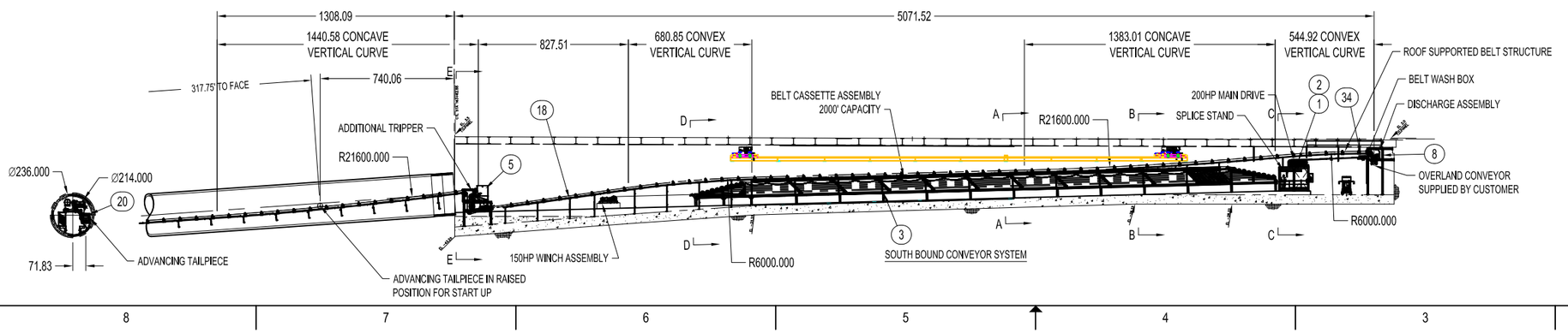

NOTE: PERIMETER GUARD OF THE CONVEYOR IS SUPPLIED BY THE CUSTOMER

PROPRIETARY NOTICE
This information is the property of The Robbins Company, and is not to be used or disclosed to others without prior written consent of The Robbins Company, and remains their property if submitted for quotation only and must be returned upon request. Any reproduction in part or as a whole without the written permission of The Robbins Company is prohibited.

MACHINE	NEXT ASSY
SF SUBWAY	

UNLESS NOTED ALL DIMS ARE inch
TOLERANCES UNLESS NOTED
FRACTIONS ±1/16
.X ± .03
.XX ± .015
.XXX ± .005
ANGLES ± 1°
SURFACE FINISH 125
DIMENSIONS (X) ARE REFERENCE
ALL GEOMETRIC DIMENSIONING & TOLERANCING PER ANSI Y14.5-2009

REV	DESCRIPTION	REV'D BY/ DATE	APP'D BY/ DATE
0			

TITLE: S.F. CENTRAL SUBWAY CONVEYOR LAYOUT

SIZE D | DWG No. 1049679 | REV 0 | SHT 2 OF 2 | SCALE 1:350 | DO NOT SCALE

DRAWN BY C. BESS | CHECKED STRUCTURES T. BESS | DATE 06/7/12 | CHECKED DESIGN T. BESS

WEIGHT TOTAL 834,615.4 LB'S | APPROVED BY T. BESS | DATE 10/16/12

Robbins

www.TheRobbinsCompany.com

1049679

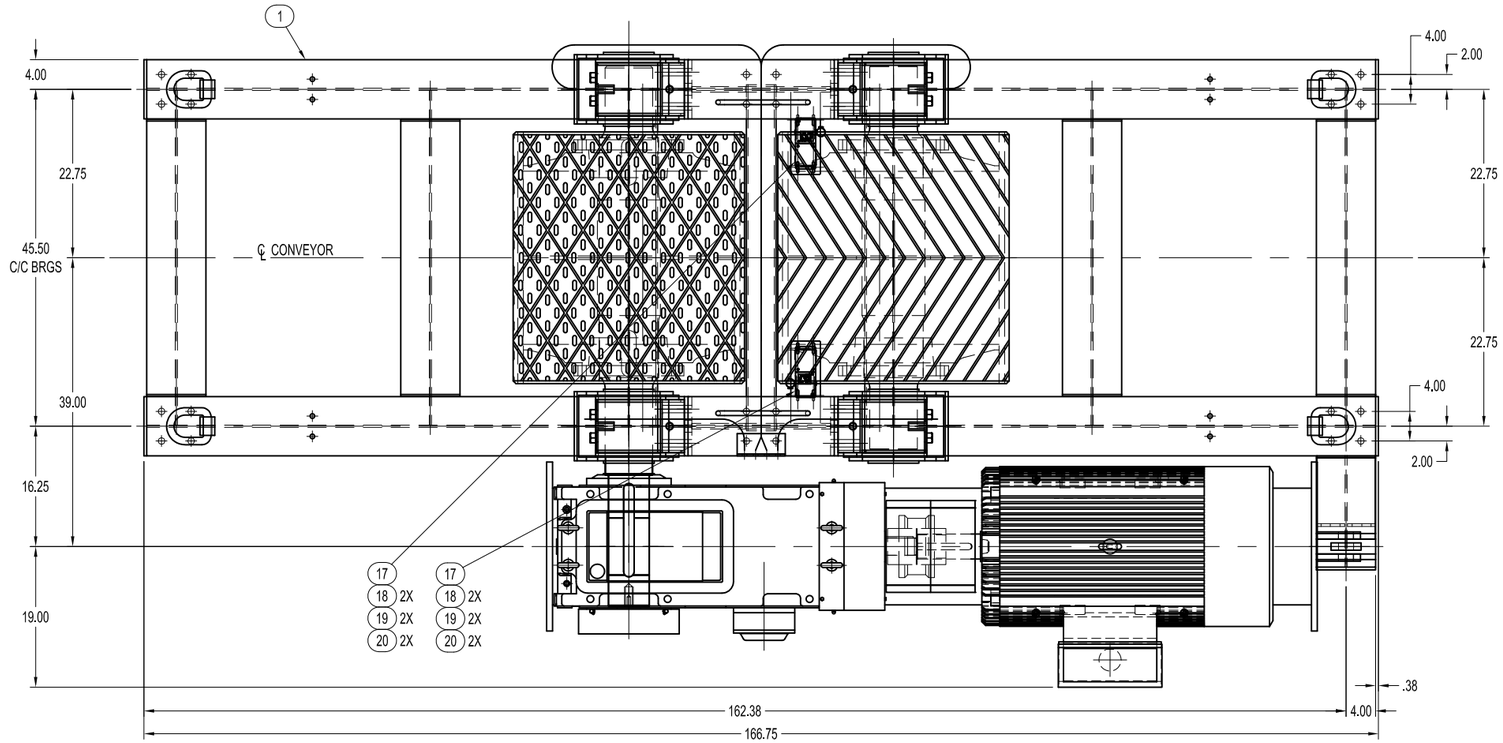

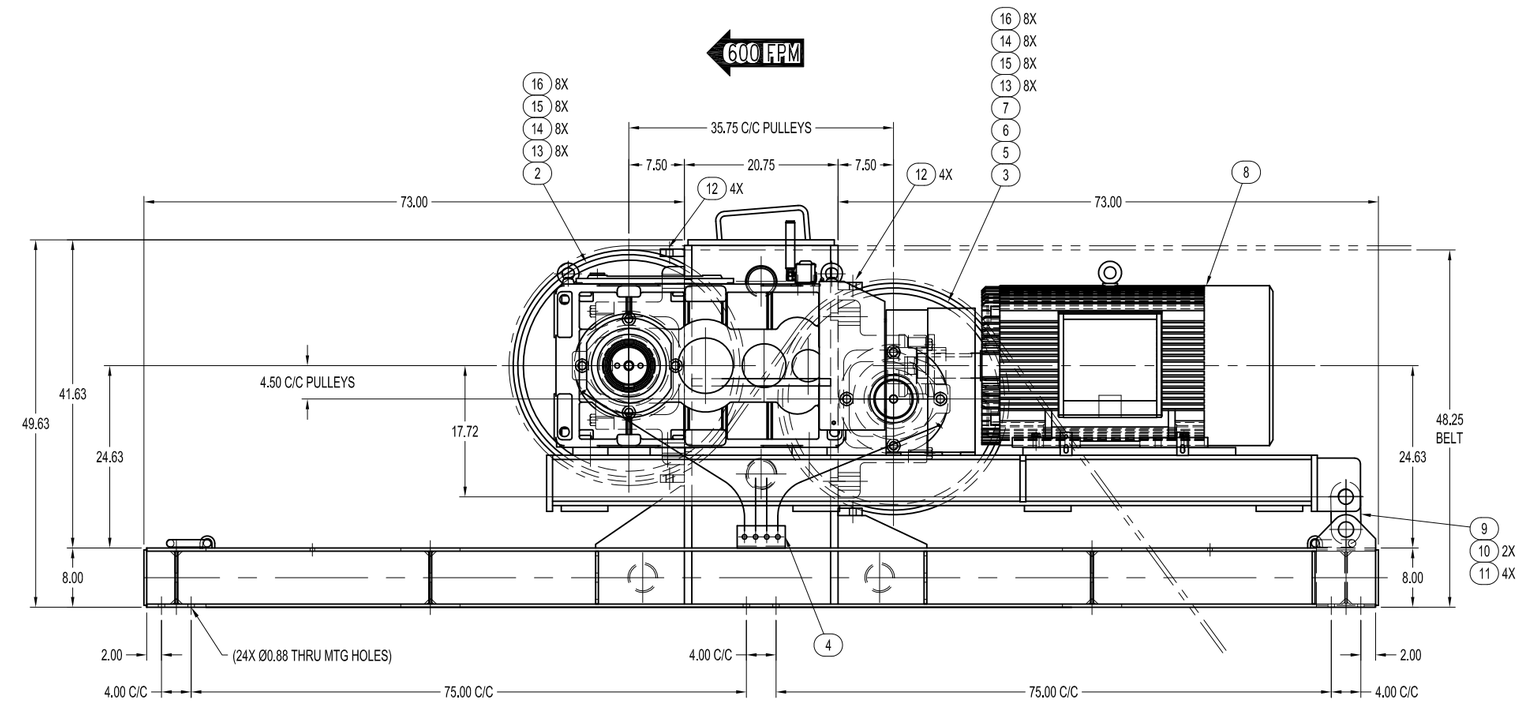

QTY	PART No.	DESCRIPTION	DWG No.	WT. Total	ITEM
1	1049074	30"BW MAIN DRIVE FRAME WELDMENT	1049074	2565.6 lbm	1
1	1050271	30"Ø X 34" FW DRIVE PULLEY ASSY	1050271	3090.0 lbm	2
1	D86636-1	30"Ø X 34" FW SNUB PULLEY ASSY	D86636-1	2952.0 lbm	3
1	1051212	30"BW MAIN DRIVE GREASE CIRCUIT	1051212	7.9 lbm	4
REF.	A84282-1	30mm SPEED SENSOR SWITCH	A84282-1	1.0 lbm	5
1	D86093-1	BELT SLIP SWITCH BRACKET	D86093-1	0.9 lbm	6
1	D85197-1	PULLEY MOD. KIT SCHEDULE	D85197-1	1.1 lbm	7
1	1050260	200HP POWER UNIT W/ MOTOR F2	1050260	4667.0 lbm	8
1	B86642-1	TORQUE LINK, 4.47" C/C w/1.9375"Ø PIN	B86642-1	6.7 lbm	9
2	81480X1	1.9375"Ø TYPE "A" PIN X 5.25" LG.	81480X1	8.8 lbm	10
4	639-108	COTTER PIN, 0.1875"Ø X 3.50" LG.	-	0.4 lbm	11
8	600-418F	HB, 1.0"Ø-8UNC X 3.0" LG. (GR 8)	-	0.8 lbm	12
16	608-434	HHCS, 1.0"Ø-8UNC X 5.5" LG. (GR 8)	-	1.6 lbm	13
16	633-011	FLAT WASHER ,1.0"Ø	-	1.6 lbm	14
16	635-017	LOCK WASHER ,1.0"Ø	-	1.6 lbm	15
16	625-010	HEX NUT ,1.0"Ø-8UNC (GR 8)	-	1.6 lbm	16
REF	A83275-1	BELT MISALIGNMENT SWITCH	A83275	-	17
4	608-006	HHCS, 1/4"Ø-20UNC X 1-1/4" LG. (GR 8)	-	0.4 lbm	18
4	635-008	LOCK WASHER, 1/4"Ø	-	0.4 lbm	19
4	625-001	HEX NUT, 1/4"Ø-20UNC (GR 8)	-	0.4 lbm	20

NOTES:

1. TORQUE FASTENERS PER MANUFACTURERS RECOMMENDATION.

TRC P/N 1049101
30"BW MAIN DRIVE ASSY SINGLE 200HP
SCALE 1:10

1049101

REV	DESCRIPTION	REV'D BY/ DATE	APP'D BY/ DATE
1	UPDATED ITEM# 8 UPDATE WEIGHT	JJC 9/21/2012	CHB

MACHINE	NEXT ASSY
S.F. SUBWAY	1049679

UNLESS NOTED ALL DIMS ARE Inch
TOLERANCES UNLESS NOTED
FRACTIONS ±1/16
.X ± .03
.XX ± .015
.XXX ± .005
ANGLES ± 1
SURFACE 125/
Finish
THIRD ANGLE PROJECTION
DIMENSIONS (X) ARE REFERENCE
ALL GEOMETRIC DIMENSIONING & TOLERANCING PER ANSI Y14.5-2009

TITLE: 30"BW MAIN DRIVE ASSY SINGLE 200HP

SIZE: D | DWG No.: 1049101 | REV: 1 | SHT 1 OF 1 | SCALE: 1:10 | DO NOT SCALE

DRAWN BY: C.LEGG | DATE: 05/19/2012 | CHECKED STANDARDS: C.BESS | CHECKED DESIGN: C.BESS

WEIGHT TOTAL: 13309.8 lbm | APPROVED BY: T.BESS | DATE: 7/11/2012

Robbins

www.TheRobbinsCompany.com

PROPRIETARY NOTICE
The information disclosed herein is the sole property of The Robbins Company, and remains the sole property, in whole or in part, of the Robbins Company. It shall not be disclosed to any other party without written consent of The Robbins Company. By accepting this information, the Robbins Company is satisfied that with this notice, without any modification or alteration to the conditions, the material is not to be reproduced, copied, or used in any manner, and is to be returned upon request to The Robbins Company.

NOTES:

1. ALL WELDS TO BE 0.25" CONTINUOUS FILLETS UNLESS NOTED OTHERWISE.
2. REMOVE ALL BURRS & BREAK SHARP EDGES.
3. ALL WELDING SHALL MEET THE REQUIREMENTS OF THE LATEST EDITION OF THE AWS STRUCTURAL WELDING CODE (D1.1/D1.1M). ALL SECTIONS AS APPLICABLE UNLESS OTHERWISE NOTED. USE E70XX LOW HYDROGEN ELECTRODES OR EQUIVALENT.
4. PAINT PER ROBBINS SPEC RC1852. MACHINED SURFACES NOT TO BE PAINTED, BUT PROTECTED BY OTHER SUITABLE METHODS.
5. STEEL STAMP OR ELECTRO-ETCH PART NUMBER, P.O. NUMBER & VENDOR I.D. CODE ON PART WITH 1" MIN. HIGH CHARACTERS.

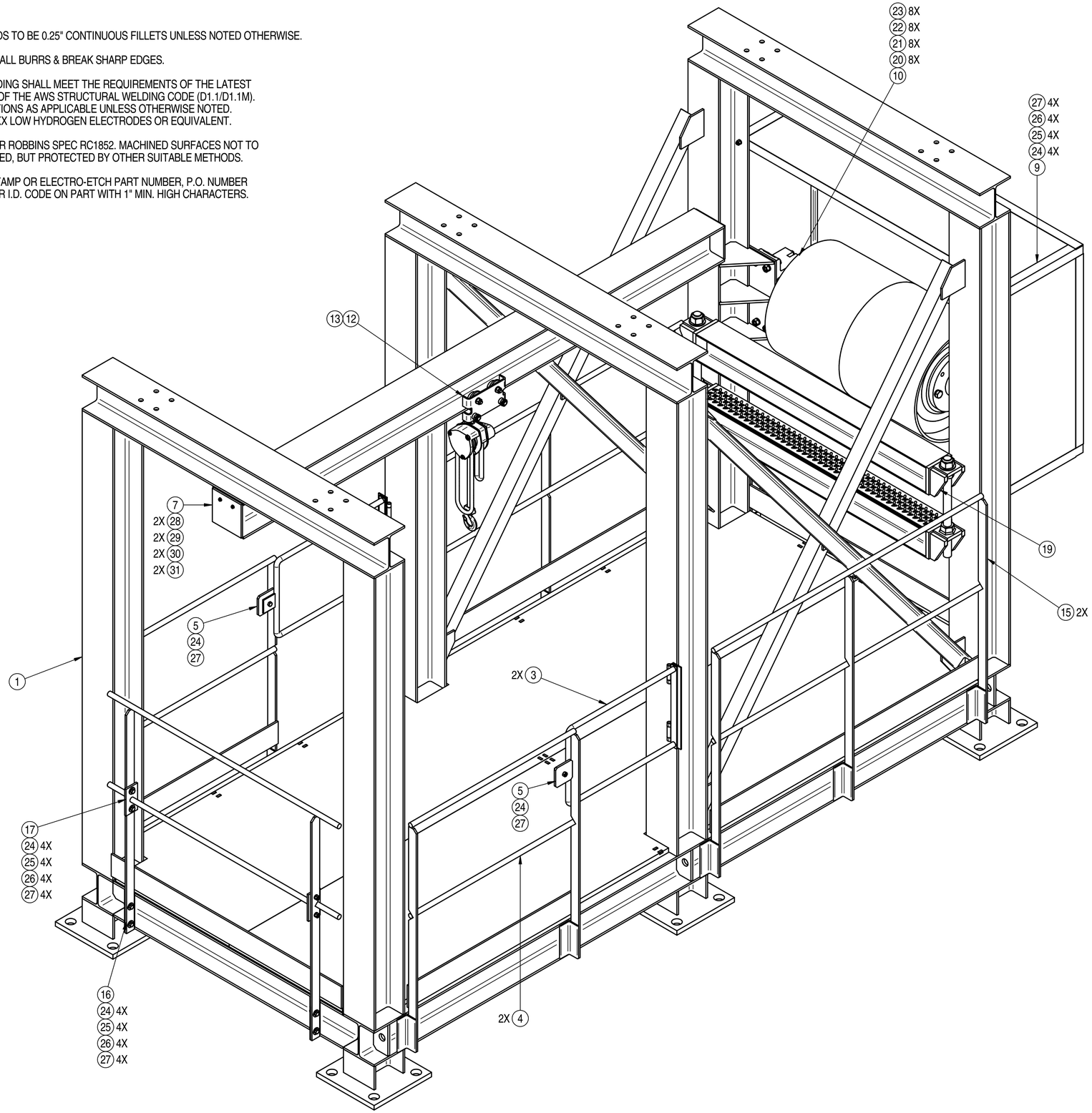

QTY	PART No.	DESCRIPTION	DWG No.	WT. Total (lbs)	ITEM
3 2	1	1049123	30" BW SPLICE STAND WELDMENT	1049123	5397.8	1
	2	4002388	SPRING LOADED SWING GATE WELD.	4002388	42.9	3
	2	1049414	SHORT HANDRAIL WELDMENT	1049413	125.1	4
	2	1049421	WELD-ON GATE LOCKING PLATE	1049421	3.9	5
	1	1049471	TROLLEY STOP PLATE	1049471	5.9	7
4	1	1049498	SPLICE STAND PULLEY GUARD	1049498	156.3	9
	1	1046679	Ø24 X 39FW PULLEY ASSEMBLY	1046679	1176.3	10
3	1	C82368-2	1 TON PLAIN TROLLEY	C82368	26.6	12
	1	B99080-2	1-TON CHAIN HOIST 4FT DROP CHAIN	B99080	44.1	13
1	2	1049948	70.0" HANDRAIL WELDMENT	1049948	172.1	15
1	1	1049958	REMOVABLE BAR HANDRAIL WELDMENT	1049958	86.1	16
1	1	1049967	REMOVABLE BAR WELDMENT	1049967	14.2	17
1	1	1049976	60.0" HANDRAIL WELDMENT	1049958	57.6	18
1	1	4000582	BELT CLAMP ASSEMBLY 30"BW	4000582	294.0	19
	8	600-181	HB, Ø3/4"-10 UNCx3" G8		4.2	20
	8	633-009	WASHER, PLAIN Ø3/4"		0.4	21
	8	635-015	WASHER, LOCK Ø3/4"		0.3	22
	8	625-008	NUT, Ø3/4"-10 UNC G8		1.1	23
	14	600-103	HB, Ø1/2"-13 UNCx1-1/2" G8		1.8	24
	12	633-006	WASHER, PLAIN Ø1/2"		0.4	25
	12	635-012	WASHER, LOCK Ø1/2"		0.2	26
	14	625-005	NUT, Ø1/2"-13 UNC G8		0.6	27
	2	600-006	HB, Ø1/4"-20 UNCx1-1/4" G8		0.1	28
	2	633-002	WASHER, PLAIN Ø1/4"		0.0	29
	2	635-008	WASHER, LOCK Ø1/4"		0.0	30
	2	625-001	NUT, Ø1/4"-20 UNC G8		0.0	31

TRC P/N 1049343
30" BW SPLICE STAND ASSEMBLY
1:10

REV	DESCRIPTION		
4	UPDATED WEIGHT ON P/N 1049498. UPDATED OVERALL WEIGHT.	CLL 9/24/12	CHB 9/24/12
3	UPDATED P/N 1049123 AND P/N 1049498	JWS 7/11/12	CHB 7/11/12
2	UPDATED P/N 1049123	JWS 6/19/12	CHB 6/19/12
1	REMOVED PN: 4002378, 1094406, 400538, AND 4049477 ADDED P/N: 1049948, 1049958, 1049967, 1049976, AND 4000582	JWS 6/14/12	CHB 6/18/12
REV	DESCRIPTION	REVD BY DATE	APPD BY DATE

PROPRIETARY NOTICE
The information disclosed hereon, is the sole property of The Robbins Company, and remains their sole property. It shall not be used, reproduced or disclosed to any other party without prior written consent of The Robbins Company. By accepting this information, recipient agrees to these conditions and will return it to The Robbins Company whatsoever is the conditions. This material is on loan only, and is to be returned upon request to The Robbins Company.

MACHINE	NEXT ASSY
S. F. SUBWAY	1049679

UNLESS NOTED ALL DIMS ARE inch
TOLERANCES UNLESS NOTED

FRACTION	±1/16
X.X	±.03
X.XX	±.015
X.XXX	±.005
ANGLES	±1°
SURFACE FINISH	125

0 - 1'	±1/16
1' - 5'	±1/8
5' - 20'	±1/4
20' +	±1/2

THIRD ANGLE PROJECTION
MACHINING (inch)
DIMENSIONS (X) ARE REF
ALL GEOMETRIC DIMENSIONING & TOLERANCING PER ANSI Y14.5-2009

TITLE
30" BW SPLICE STAND ASSEMBLY

SIZE	DWG No.	REV	SHT	SCALE
D	1049343	4	1 OF 2	1:10

DO NOT SCALE

DRAWN BY	CHECKED STANDARDS
J.SLEDD	C.BESS
DATE	CHECKED DESIGN
6/7/12	C.BESS
UNIT OF MEASURE	APPROVED BY
Each	T.BESS
WEIGHT TOTAL	DATE
7260.4 lbm	6/11/12

Robbins

www.TheRobbinsCompany.com

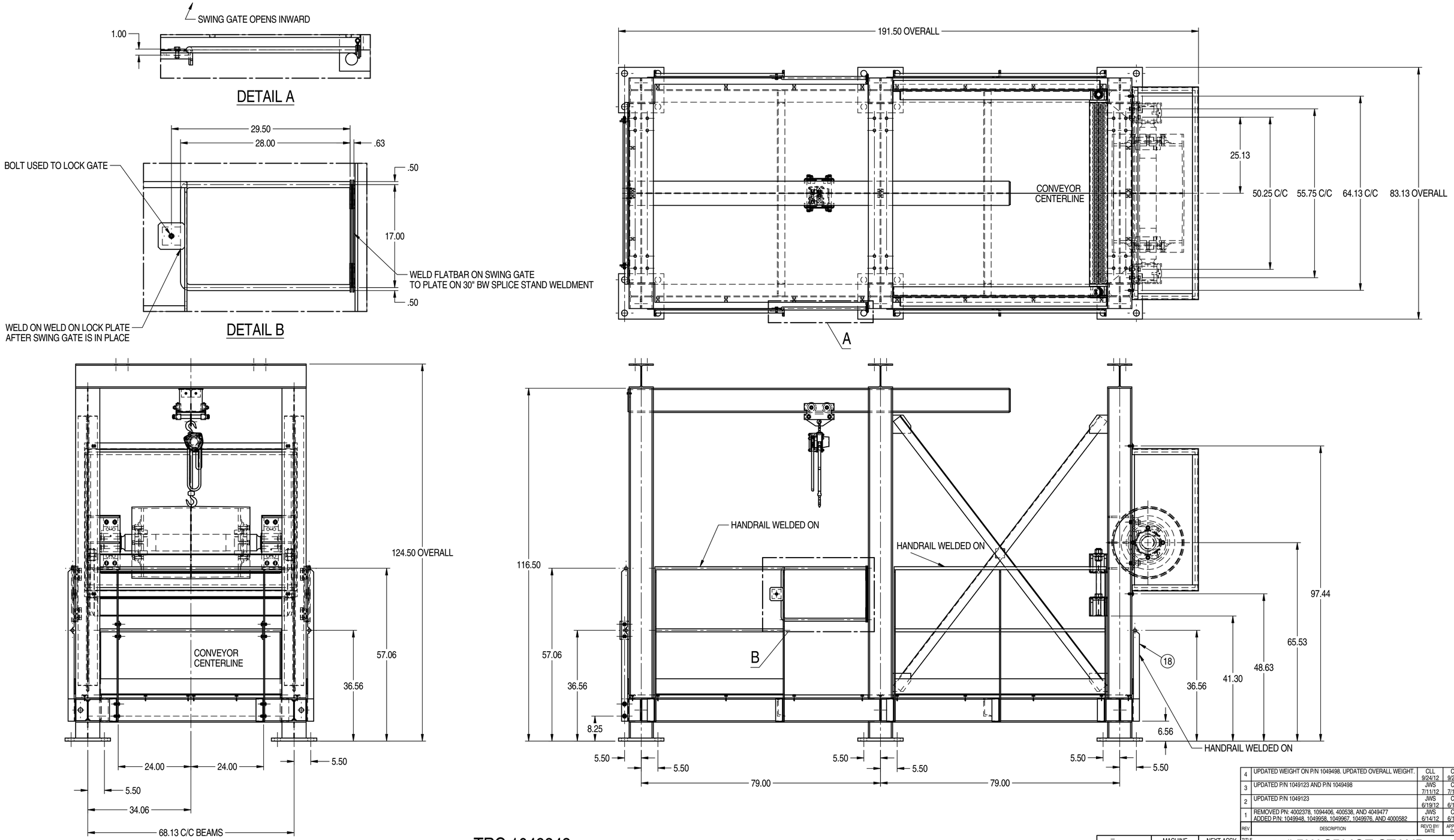

TRC 1049343
30" BW SPLICE STAND ASSEMBLY
1:15

REV	DESCRIPTION	REV'D BY/ DATE	APP'D BY/ DATE
4	UPDATED WEIGHT ON P/N 1049498. UPDATED OVERALL WEIGHT.	CLL 9/24/12	CHB 9/24/12
3	UPDATED P/N 1049123 AND P/N 1049498	JWS 7/11/12	CHB 7/11/12
2	UPDATED P/N 1049123	JWS 6/19/12	CHB 6/19/12
1	REMOVED PN: 4002378, 1094406, 400538, AND 4049477 ADDED P/N: 1049948, 1049958, 1049967, 1049976, AND 4000582	JWS 6/14/12	CHB 6/18/12

PROPRIETARY NOTICE
The information disclosed hereon, is the sole property of The Robbins Company, and remains their sole property. It shall not be duplicated in full or part, used by, or disclosed to any other party without prior written consent of The Robbins Company. By accepting this information, recipient agrees to abide in total with this notice, without any modification whatsoever to the conditions. This material is on loan only, and is to be returned upon request to The Robbins Company.

MACHINE	NEXT ASSY
S. F. SUBWAY	1049679

UNLESS NOTED ALL DIMS ARE inch

TOLERANCES UNLESS NOTED

FAB (inch)		MACHINING (inch)	
0 - 1'	±1/16	FRACTION	±1/16
1' - 5'	±1/8	X.X	±.03
5' - 20'	±1/4	X.XX	±.015
20' +	±1/2	X.XXX	±.005
		ANGLES	±1°
THIRD ANGLE PROJECTION		SURFACE FINISH	125√

DIMENSIONS (X) ARE REF

ALL GEOMETRIC DIMENSIONING & TOLERANCING PER ANSI Y14.5-2009

TITLE
30" BW SPLICE STAND ASSEMBLY

SIZE	DWG No.	REV	SHT	SCALE
D	1049343	4	2 OF 2	1:20

DO NOT SCALE

Robbins

DRAWN BY	J.SLEDD
DATE	6/7/12
CHECKED STANDARDS	C.BESS
CHECKED DESIGN	C.BESS
UNIT OF MEASURE	Each
APPROVED BY	T.BESS
WEIGHT TOTAL	7260.4 lbm
DATE	6/11/12

www.TheRobbinsCompany.com

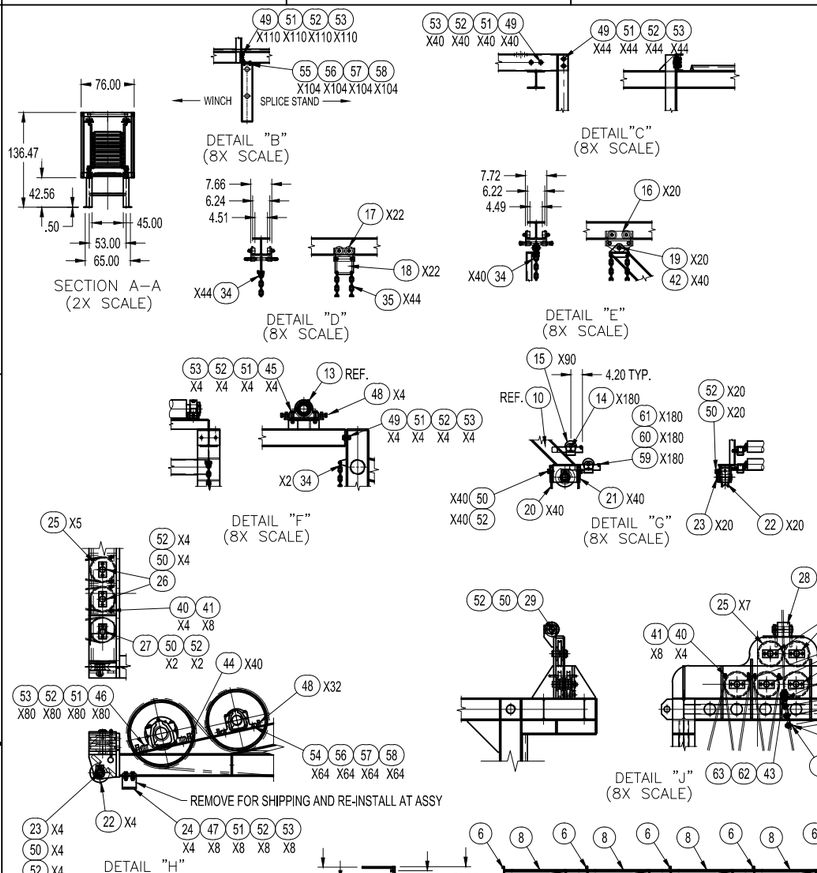

QTY	PART No.	DESCRIPTION	DWG No.	WT. Total	ITEM
80	608-184	HHCS, 0.75Ø-10UNC X 3.75" LG. (GR 8)	-	48.0 LB'S	46
8	608-179	HHCS, 0.75Ø-10UNC X 2.5" LG. (GR 8)	-	3.2 LB'S	47
36	608-179F	HHCS, 0.75Ø-10UNC X 2.5" LG. FULLY THREADED (GR 8)	-	14.4 LB'S	48
198	608-178	HHCS, 0.75Ø-10UNC X 2.25" LG. (GR 8)	-	79.2 LB'S	49
81	608-175	HHCS, 0.75Ø-10UNC X 1.5" LG. (GR 8)	-	29.1 LB'S	50
290	633-009	0.75"Ø FLAT WASHER	-	11.6 LB'S	51
371	635-015	0.75"Ø LOCK WASHER	-	15.0 LB'S	52
290	625-008	HEX NUT 0.75"Ø-10UNC (GR 8)	-	29.0 LB'S	53
64	608-157	HHCS, 0.625Ø-11UNC X 3.0" LG. (GR 8)	-	19.2 LB'S	54
96	608-153	HHCS, 0.625Ø-11UNC X 2.00" LG. (GR 8)	-	31.2 LB'S	55
160	633-008	0.625"Ø FLAT WASHER	-	5.0 LB'S	56
160	635-014	0.625"Ø LOCK WASHER	-	5.0 LB'S	57
160	625-007	HEX NUT 0.625"Ø-11UNC (GR 8)	-	13.5 LB'S	58
180	608-051	HHCS, 0.375Ø-16UNC X 0.75" LG. (GR 8)	-	9.0 LB'S	59
180	635-010	0.375"Ø LOCK WASHER	-	1.8 LB'S	60
180	625-003	HEX NUT 0.375"Ø-16UNC (GR 8)	-	3.6 LB'S	61
1	608-103	HHCS, 0.50"Ø-13UNC X 1.5" LG (GR 8)	-	0.1 LB'S	62
1	635-012	0.50"Ø LOCK WASHER	-	0.1 LB'S	63

BELT CASSETTE SPECIFICATIONS

BELT RATIO = 10:1
SHEAVE RATIO = 10:1
MAXIMUM TAKEUP TENSION = 8,677 LBS.
MAXIMUM LINE SPEED = 600 FPM
MINIMUM FLEET OFFSET = 36.08 FEET (1.5°)

QTY	PART No.	DESCRIPTION	DWG No.	WT. Total	ITEM
1	1048547	30" BW PULLEY SECTION WELDMENT	1048457	3,968.8 LB'S	1
11	1048558	30" BW INTERMEDIATE HORIZONTAL WELDMENT	1048558	17,655.0 LB'S	2
1	1048599	30" BW SHEAVE SECTION WELDMENT	1048559	4,063.0 LB'S	3
12	1048561	30" BW CASSETTE LEG WELDMENT	1048561	3,840.0 LB'S	4
11	4002534	RH UPPER TRACK SUPPORT ANGLE	4002534	1,094.5 LB'S	5
11	4002533	LH UPPER TRACK SUPPORT ANGLE	4002533	1,094.5 LB'S	6
1	1048565	30" BW UPPER TRACK STARTER SECTION	1048565	1,150.7 LB'S	7
10	1048563	30" BW UPPER TRACK INTERMEDIATE SECTION	1048563	10,627.0 LB'S	8
1	1048937	30" BW PULLEY CARRIAGE WELDMENT	1048937	4527.2 LB'S	9
10	1048574	30" BW SEPERATOR CARRIAGE WELDMENT	1048574	2,856.0 LB'S	10
10	1046679	24"Ø X 39" FW CROWNED PULLEY ASSY	1046679	11,893.0 LB'S	11
8	1046696	22"Ø X 39" FW CROWNED PULLEY ASSY	1046696	8,042.5 LB'S	12
1	1048585	6.50"Ø LIVE SHAFT ASSY	1048585	272.1 LB'S	13
180	B82922-1	RETURN ROLL MOUNTING BRACKET FOR SEPERATOR	B82922	234.0 LB'S	14
118	D81747-2	30"BW - 4"Ø CEMA "C" RETURN ROLL	B81747	3,744.0 LB'S	15
20	C83268-2	1 TON PLAIN TROLLEY	C83268	540.0 LB'S	16
22	C83268-1	1/4 TON PLAIN TROLLEY	C83268	418.0 LB'S	17
22	B83098-1	CHAIN CONNECTING PLATE	B83098	88.0 LB'S	18
20	B83097-1	TROLLY CONNECTING PIN	B83097	16.0 LB'S	19
40	B83093-1	V-TRACK SCRAPER	B83093	20.0 LB'S	20
40	4002518	SCRAPER CLAMP	4002518	56.0 LB'S	21
24	80966X10	7.0"Ø V-WHEEL ASSY	80966-10	576.0 LB'S	22
24	B83120-1	V-WHEEL PIN WELDMENT	B83120	168.0 LB'S	23
4	B83099-1	PULLEY CARRIAGE RETAINER	B83099	28.4 LB'S	24
12	81172X20	9.45"Ø SHEAVE ASSY	81172-20	322.3 LB'S	25
5	B83823-1	DOUBLE SHEAVE PIN	B83283-1	20.0 LB'S	26
3	81160	SHEAVE WHEEL AXLE	81160	6.0 LB'S	27
1	1049734	4.33"Ø ROPE ROLLER ASSY	1049374	40.9 LB'S	28
1	1049733	ROPE ROLLER PIN WELDMENT	1049733	9.0 LB'S	29
1	4001339	CASSETTE WINCH ASSY	4001339	3,618.0 LB'S	30
1	80075X34-2116	13mmØ, 6X37 EIPS WIRE ROPE X 2116'-0" LG.	80075	974.0 LB'S	31
1	80082X4	0.50"Ø WIRE ROPE THIMBLE	80082	0.9 LB'S	32
3	80081X4	0.50"Ø WIRE ROPE CLIP	80081	2.1 LB'S	33
88	80991X3	0.375"Ø CHAIN SHACKLE	80991	17.6 LB'S	34
44	B83185-1071	0.375"Ø LONG LINK CHAIN X 116" LG.	B83185	616.0 LB'S	35
1	1049662	30"BW GREASE CIRCUIT FOR PULLEY CARRIAGE	1049662	140.55 LB'S	36
1	1049661	SHEAVE SECTION GREASE CIRCUIT	1049661	10.8 LB'S	37
1	D83142-1	PULLEY SECTION GREASE CIRCUIT	D83142	132.0 LB'S	38
10	D83186-2	SEPERATOR CARRIAGE GREASE CIRCUIT	D83186	40.0 LB'S	39
8	1048954	3/4"Ø WIRE ROPE GUIDE PIN (DOUBLE SHEAVE)	1048954	1.2 LB'S	40
16	A83114-1	0.125"Ø HAIRPIN, COTTER	A83114	-	41
40	639-078	0.125"Ø X 2.50" LG. COTTER PIN	-	-	42
1	B83827-1	RETAINER PIN	B83827-1	1.0 LB'S	43
40	608-425F	HHCS, 1.0"Ø-8UNC X 2.5" LG., FULLY THREADED (GR 8)	-	30.4 LB'S	44
4	608-185	HHCS, 0.75Ø-10UNC X 4.0" LG. (GR 8)	-	2.4 LB'S	45

1048537

PROPRIETARY NOTICE:
The information disclosed on this drawing is the property of The Robbins Company and remains their sole property. It shall not be copied, used or disclosed to others in whole or in part for any purpose without prior written consent of The Robbins Company. Any such copies made must contain the same notice. In addition to and with this notice, without any modification.

REV	DESCRIPTION	REV'D BY/ DATE	APP'D BY/ DATE
0	ISSUED		

MACHINE: SF SUBWAY
NEXT ASSY:

UNLESS NOTED ALL DIMS ARE inch
TOLERANCES UNLESS NOTED
FRACTIONS ± 1/16 | .X ± .03 | .XX ± .015 | .XXX ± .005 | ANGLES ± 1° | SURFACE FINISH 125
THIRD ANGLE PROJECTION
DIMENSIONS (X) ARE REFERENCE
ALL GEOMETRIC DIMENSIONING & TOLERANCING PER ANSI Y14.5-2009

30"BW CASSETTE ASSEMBLY 2000'-0" CAPACITY

REV	DWG No.	REV	SHT	SCALE
D	1048537	0	1 of 1	1:200

DO NOT SCALE

DRAWN BY: C. BESS
DATE: 05/14/12
CHECKED STRUCTURE: T. BESS
CHECKED DESIGN: T. BESS
APPROVED: T. BESS
DATE:
WEIGHT TOTAL: 83,275.9 lb's

Robbins

www.TheRobbinsCompany.com

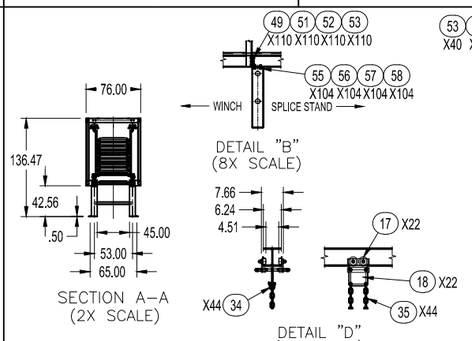

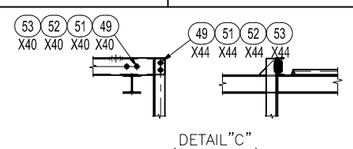

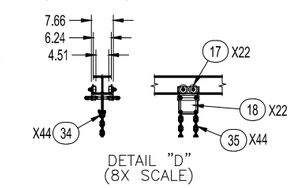

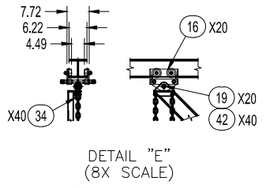

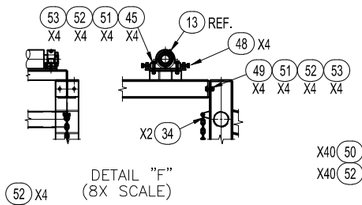

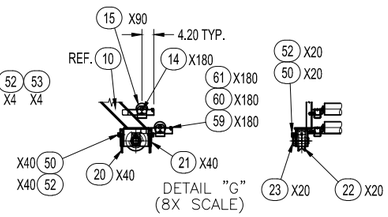

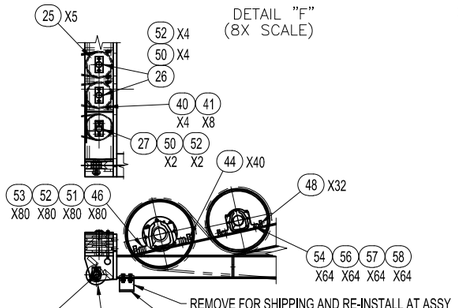

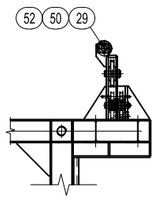

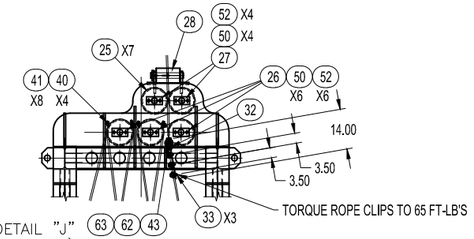

BELT CASSETTE SPECIFICATIONS

BELT RATIO = 10:1
SHEAVE RATIO = 10:1
MAXIMUM TAKEUP TENSION = 8,677 LBS.
MAXIMUM LINE SPEED = 600 FPM
MINIMUM FLEET OFFSET = 36.08 FEET (15.0°)

QTY	PART No.	DESCRIPTION	DWG No.	WT. Total	ITEM
80	608-184	HHCS, 0.75Ø-10UNC X 3.75" LG. (GR 8)	-	48.0 LB'S	46
8	608-179	HHCS, 0.75Ø-10UNC X 2.5" LG. (GR 8)	-	3.2 LB'S	47
36	608-179F	HHCS, 0.75Ø-10UNC X 2.5" LG. FULLY THREADED (GR 8)	-	14.4 LB'S	48
198	608-178	HHCS, 0.75Ø-10UNC X 2.25" LG. (GR 8)	-	79.2 LB'S	49
81	608-175	HHCS, 0.75Ø-10UNC X 1.5" LG. (GR 8)	-	29.1 LB'S	50
290	633-009	0.75"Ø FLAT WASHER	-	11.6 LB'S	51
371	635-015	0.75"Ø LOCK WASHER	-	15.0 LB'S	52
290	625-008	HEX NUT 0.75"Ø-10UNC (GR 8)	-	29.0 LB'S	53
64	608-157	HHCS, 0.625Ø-11UNC X 3.0" LG. (GR 8)	-	19.2 LB'S	54
96	608-153	HHCS, 0.625Ø-11UNC X 2.00" LG. (GR 8)	-	31.2 LB'S	55
160	633-008	0.625"Ø FLAT WASHER	-	5.0 LB'S	56
160	635-014	0.625"Ø LOCK WASHER	-	5.0 LB'S	57
160	625-007	HEX NUT 0.625"Ø-11UNC (GR 8)	-	13.5 LB'S	58
180	608-051	HHCS, 0.375Ø-16UNC X 0.75" LG. (GR 8)	-	9.0 LB'S	59
180	635-010	0.375"Ø LOCK WASHER	-	1.8 LB'S	60
180	625-003	HEX NUT 0.375"Ø-16UNC (GR 8)	-	3.6 LB'S	61
1	608-103	HHCS, 0.50"Ø-13UNC X 1.5" LG (GR 8)	-	0.1 LB'S	62
1	635-012	0.50"Ø LOCK WASHER	-	0.1 LB'S	63

QTY	PART No.	DESCRIPTION	DWG No.	WT. Total	ITEM
1	1048547	30" BW PULLEY SECTION WELDMENT	1048457	3,968.8 LB'S	1
11	1048558	30" BW INTERMEDIATE HORIZONTAL WELDMENT	1048558	17,655 LB'S	2
1	1048559	30" BW SHEAVE SECTION WELDMENT	1048559	4,063.0 LB'S	3
12	1048561	30" BW CASSETTE LEG WELDMENT	1048561	3,840.0 LB'S	4
11	4002534	RH UPPER TRACK SUPPORT ANGLE	4002534	1,094.5 LB'S	5
11	4002533	LH UPPER TRACK SUPPORT ANGLE	4002533	1,094.5 LB'S	6
1	1048565	30" BW UPPER TRACK STARTER SECTION	1048565	1,150.7 LB'S	7
10	1048563	30" BW UPPER TRACK INTERMEDIATE SECTION	1048563	10,627.0 LB'S	8
1	1048937	30" BW PULLEY CARRIAGE WELDMENT	1048937	4527.2 LB'S	9
10	1048574	30" BW SEPERATOR CARRIAGE WELDMENT	1048574	2,856.0 LB'S	10
10	1046679	24"Ø X 39" FW CROWNED PULLEY ASSY	1046679	11,893.0 LB'S	11
8	1046696	22"Ø X 39" FW CROWNED PULLEY ASSY	1046696	8,042.5 LB'S	12
1	1048585	6.50"Ø LIVE SHAFT ASSY	1048585	272.1 LB'S	13
180	B82922-1	RETURN ROLL MOUNTING BRACKET FOR SEPERATOR	B82922	234.0 LB'S	14
118	D81747-2	30"BW - 4"Ø CEMA "C" RETURN ROLL	B81747	3,744.0 LB'S	15
20	C83268-2	1 TON PLAIN TROLLEY	C83268	540.0 LB'S	16
22	C83268-1	1/4 TON PLAIN TROLLEY	C83268	418.0 LB'S	17
22	B83098-1	CHAIN CONNECTING PLATE	B83098	88.0 LB'S	18
20	B83097-1	TROLLY CONNECTING PIN	B83097	16.0 LB'S	19
40	B83093-1	V-TRACK SCRAPER	B83093	20.0 LB'S	20
40	4002518	SCRAPER CLAMP	4002518	56.0 LB'S	21
24	80966X10	7.0"Ø V-WHEEL ASSY	80966-10	576.0 LB'S	22
24	B83120-1	V-WHEEL PIN WELDMENT	B83120	168.0 LB'S	23
4	B83099-1	PULLEY CARRIAGE RETAINER	B83099	28.4 LB'S	24
12	81172X20	9.45"Ø SHEAVE ASSY	81172-20	322.3 LB'S	25
5	B83823-1	DOUBLE SHEAVE PIN	B83283-1	20.0 LB'S	26
3	81160	SHEAVE WHEEL AXLE	81160	6.0 LB'S	27
1	1049734	4.33"Ø ROPE ROLLER ASSY	1049734	40.9 LB'S	28
1	1049733	ROPE ROLLER PIN WELDMENT	1049733	9.0 LB'S	29
1	4001339	CASSETTE WINCH ASSY	4001339	3,618.0 LB'S	30
1	80075X34-2116	13mmØ, 6X37 EIPS WIRE ROPE X 2116'-0" LG.	80075	974.0 LB'S	31
1	80082X4	0.50"Ø WIRE ROPE THIMBLE	80082	0.9 LB'S	32
3	80081X4	0.50"Ø WIRE ROPE CLIP	80081	2.1 LB'S	33
88	80991X3	0.375"Ø CHAIN SHACKLE	80991	17.6 LB'S	34
44	B83185-1071	0.375"Ø LONG LINK CHAIN X 116" LG.	B83185	616.0 LB'S	35
1	1049662	30"BW GREASE CIRCUIT FOR PULLEY CARRIAGE	1049662	140.5 LB'S	36
1	1049661	SHEAVE SECTION GREASE CIRCUIT	1049661	10.8 LB'S	37
1	D83142-1	PULLEY SECTION GREASE CIRCUIT	D83142	132.0 LB'S	38
10	D83186-2	SEPERATOR CARRIAGE GREASE CIRCUIT	D83186	40.0 LB'S	39
8	1048954	3/4"Ø WIRE ROPE GUIDE PIN (DOUBLE SHEAVE)	1048954	1.2 LB'S	40
16	A83114-1	0.125"Ø HAIRPIN, COTTER	A83114	-	41
40	639-078	0.125"Ø X 2.50" LG. COTTER PIN	-	-	42
1	B83827-1	RETAINER PIN	B83827-1	1.0 LB'S	43
40	608-425F	HHCS, 1.0"Ø-8UNC X 2.5" LG., FULLY THREADED (GR 8)	-	30.4 LB'S	44
4	608-185	HHCS, 0.75Ø-10UNC X 4.0" LG. (GR 8)	-	2.4 LB'S	45

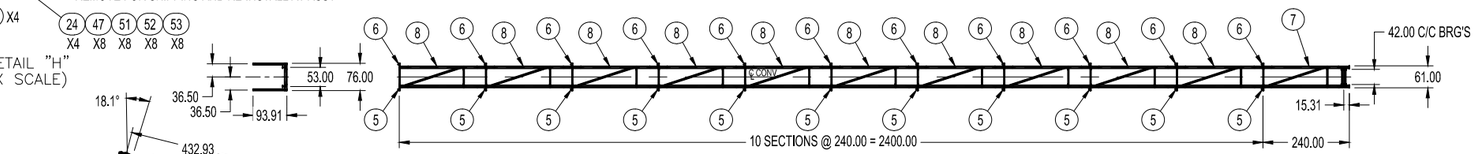

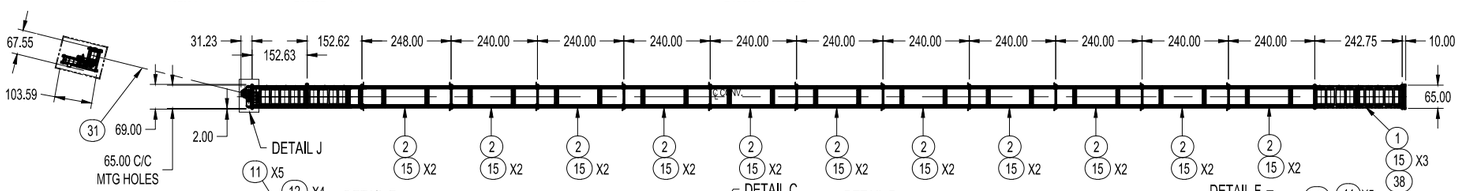

REV	DESCRIPTION	REV'D BY / DATE	APP'D BY / DATE
1	ITEM 3, P/N1048559 CHANGED TO P/N 1048559	K. BAILES 7/17/2012	

TITLE: 30"BW CASSETTE ASSEMBLY 2000'-0" CAPACITY

MACHINE	NEXT ASSY
SF SUBWAY	

UNLESS NOTED ALL DIMS ARE inch
TOLERANCES UNLESS NOTED
0 - 1' ± 1/16 | 1' - 5' ± 1/8 | 5' - 20' ± 1/4 | 20' + ± 1/2
FRACTIONS ± 1/64 | .X ± .05 | .XX ± .015 | .XXX ± .005 | ANGLES ± 1° | SURFACE 125
DIMENSIONS (XX) ARE REFERENCE
ALL GEOMETRIC DIMENSIONING & TOLERANCING PER ANSI Y14.5-2009

SIZE D | DWG NO. 1048955 | REV 1 | SHT 1 OF 1 | SCALE 1:200 | DO NOT SCALE

DRAWN BY: C. BESS | DATE: 05/14/12
CHECKED BY (ENGR): T. BESS
CHECKED BY (MFG): T. BESS
APPROVED BY: T. BESS | DATE:
WEIGHT TOTAL: 83,275.9 LB'S

Robbins

www.TheRobbinsCompany.com

1048955

PROPRIETARY NOTICE:
The information disclosed hereon, in the sole property of The Robbins Company. It is loaned for confidential use and is not to be duplicated in full or part, used by, or disclosed to any person, firm or corporation for any purpose without the written permission of The Robbins Company. By accepting this information, recipient agrees to return it upon demand and to use it only for the purpose for which it was loaned, and recipient agrees to be bound by the foregoing conditions. This material is not to be used in any way detrimental to the interest of The Robbins Company.

QTY	PART No.	DESCRIPTION	DWG No.	WT. Total (lbs)	ITEM
1	1050426	30"BW TRIPPER LOWER HALF ASSEMBLY	1050426	6992.6	1
1	1050499	30"BW TRIPPER UPPER HALF ASSEMBLY	1050499	5504.7	2
1	1050996	30"BW TRIPPER TRANSITIONAL CHUTE ASSY	1050996	2980.9	3
1	1051444	TRIPPER ASSEMBLY GREASING CIRCUIT	1051444	49.5	4
2	4001918	AIR RESERVOIR KIT, BELT SCRAPER	4001918	71.8	5
2	A81860-5750	HYD HOSE ASSY W/JIC ENDS	A81860		6
40	608-179	HHCS, Ø3/4"-10UNCx2.5" G8		18.7	7
40	633-009	WASHER, PLAIN Ø3/4"		1.8	8
40	635-015	WASHER, LOCK Ø3/4"		1.7	9
40	625-008	NUT, Ø3/4"-10 UNC G8		5.6	10

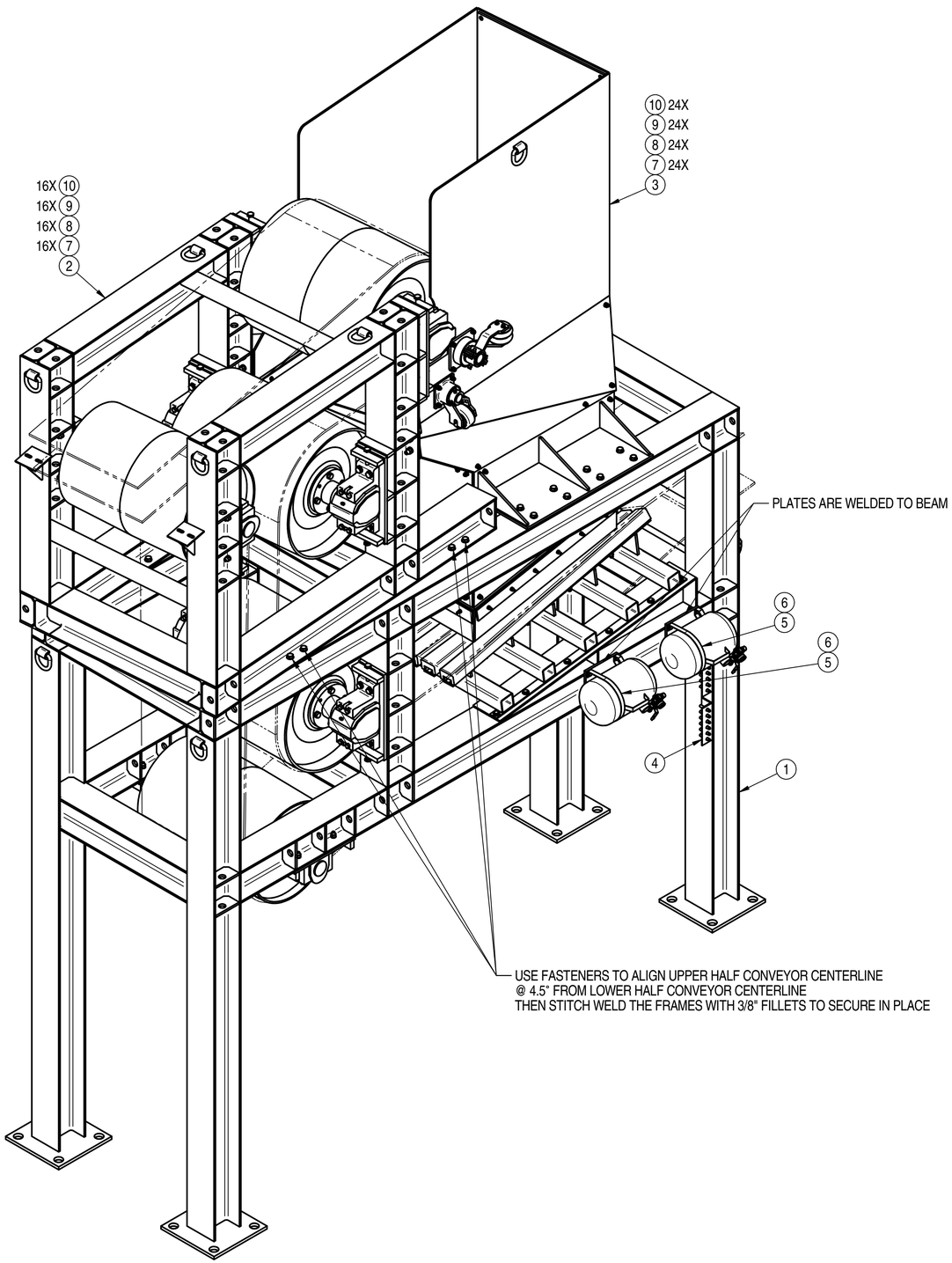

TRC P/N 1050505
SB 30"BW TRIPPER ASSEMBLY
SCALE 1:14

PROPRIETARY NOTICE
The information disclosed hereon, is the sole property of The Robbins Company, and remains their sole property. It shall not be copied, used and disclosed to others for any purpose other party without prior written consent of The Robbins Company. By accepting this information, recipient agrees to keep it confidential and not to copy, disclose or use it for any purpose whatsoever to the conditions. This material is on loan only, and is to be returned upon request to The Robbins Company.

REV	DESCRIPTION	REV'D BY/ DATE	APP'D BY/ DATE

MACHINE	NEXT ASSY
S.F. SUBWAY	1049679

TITLE: SB 30"BW TRIPPER ASSEMBLY

UNLESS NOTED ALL DIMS ARE inch
TOLERANCES UNLESS NOTED
FRACTION ±1/16
X.X ±.03
X.XX ±.015
X.XXX ±.005
ANGLES ±1°
SURFACE FINISH 125
MACHINING (.005)
0 - 1' ±1/16
1' - 5' ±1/8
5' - 20' ±1/4
20' + ±1/2
AS INCH
THIRD ANGLE PROJECTION
DIMENSIONS (X) ARE REF
ALL GEOMETRIC DIMENSIONING & TOLERANCING PER ANSI Y14.5-2009

SIZE D | DWG No. 1050505 | REV 0 | SHT 1 OF 2 | SCALE 1:14 | DO NOT SCALE

DRAWN BY C.LEGG
DATE 07/19/2012
CHECKED STANDARDS C.BESS
CHECKED DESIGN C.BESS
UNIT OF MEASURE Each
WEIGHT TOTAL 15627.3 lbm
APPROVED BY T.BESS
DATE 08/30/2012

Robbins

www.TheRobbinsCompany.com

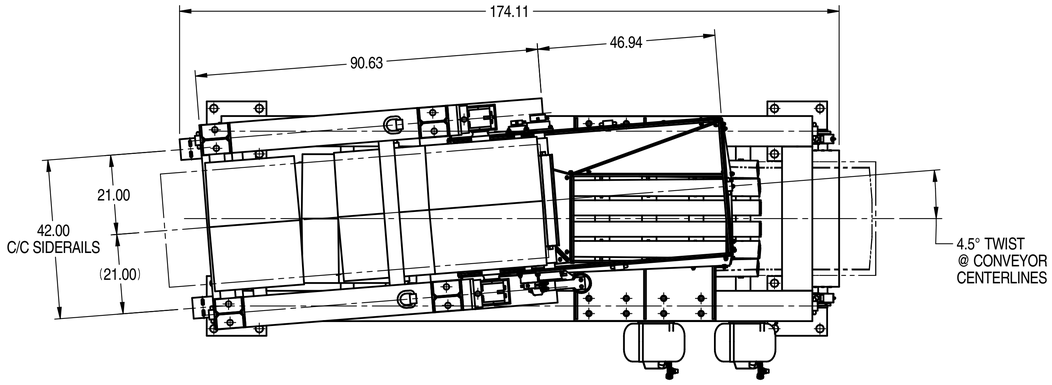

DIRECTION OF MUCK TRAVEL

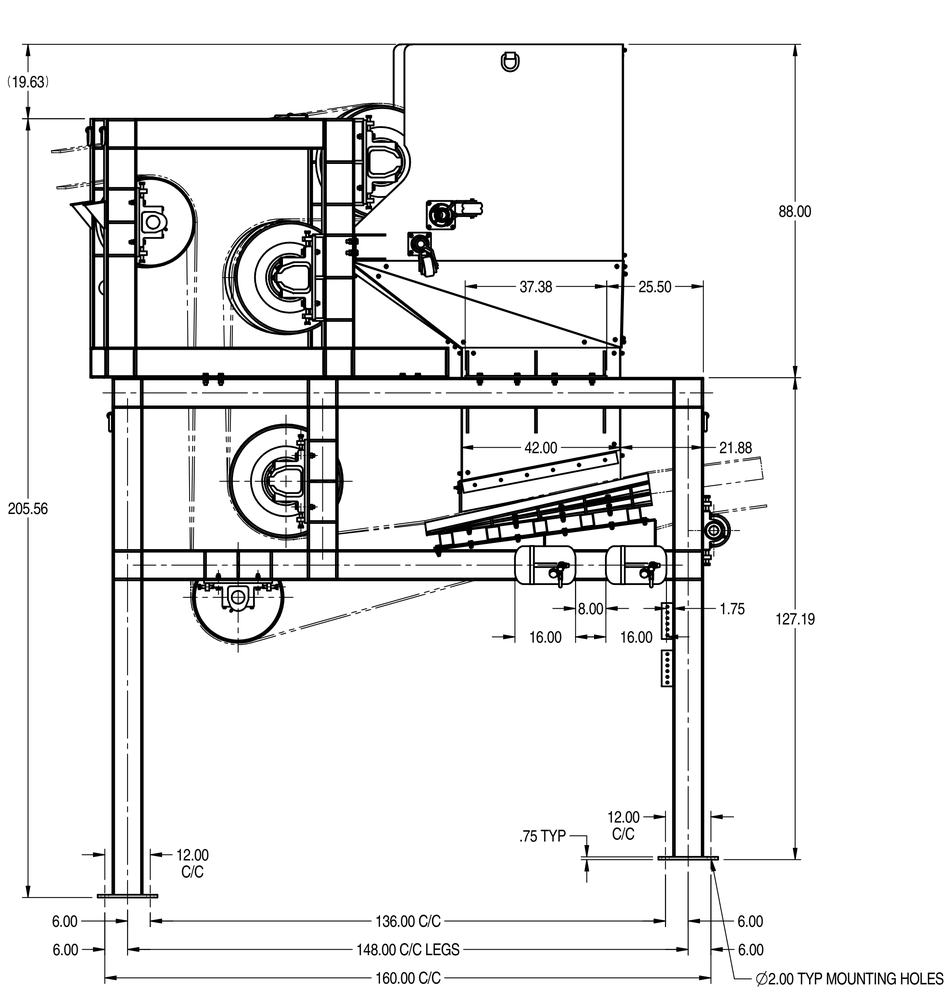

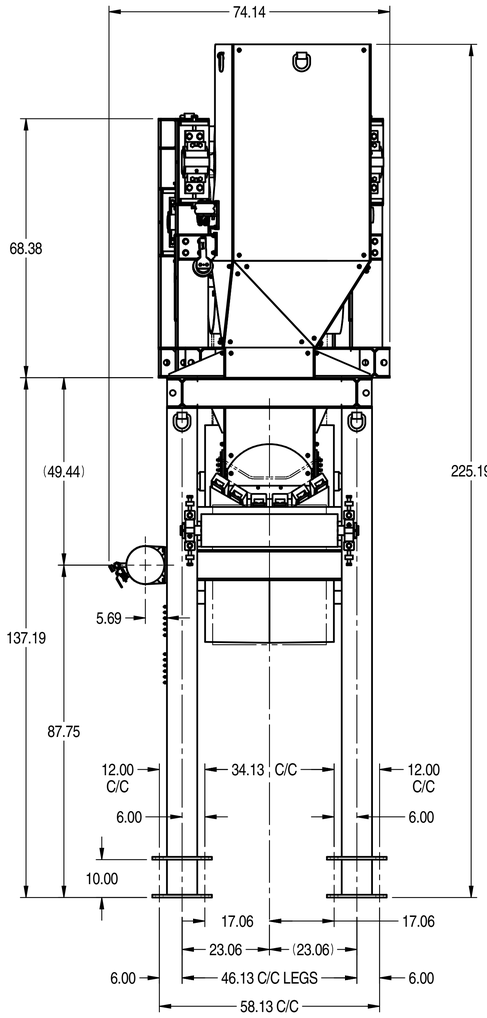

TRC P/N 1050505
SB 30"BW TRIPPER ASSEMBLY
SCALE 1:20

REV	DESCRIPTION	REV'D BY/ DATE	APP'D BY/ DATE

MACHINE	NEXT ASSY
S.F. SUBWAY	1049679

UNLESS NOTED ALL DIMS ARE inch

TOLERANCES UNLESS NOTED

FAB (inch)		MACHINING (inch)	
0 - 1'	±1/16	FRACTION	±1/16
1' - 5'	±1/8	X.X	±.03
5' - 20'	±1/4	X.XX	±.015
20' +	±1/2	X.XXX	±.005
		ANGLES	±1°
		SURFACE FINISH	125

THIRD ANGLE PROJECTION

DIMENSIONS (X) ARE REF

ALL GEOMETRIC DIMENSIONING & TOLERANCING PER ANSI Y14.5-2009

PROPRIETARY NOTICE
The information disclosed hereon, is the sole property of The Robbins Company, and remains their sole property. It shall not be duplicated in full or part, used by, or disclosed to any other party without prior written consent of The Robbins Company. By accepting this information, recipient agrees to abide in total with this notice, without any modification whatsoever to the conditions. This material is on loan only, and is to be returned upon request to The Robbins Company.

TITLE
SB 30"BW TRIPPER ASSEMBLY

SIZE	DWG No.	REV	SHT	SCALE
D	1050505	0	2 OF 2	1:20

DO NOT SCALE

DRAWN BY C.LEGG	CHECKED STANDARDS C.BESS
DATE 07/19/2012	CHECKED DESIGN C.BESS
UNIT OF MEASURE Each	APPROVED BY T.BESS
WEIGHT TOTAL 15627.3 lbm	DATE 08/30/2012

Robbins

www.TheRobbinsCompany.com

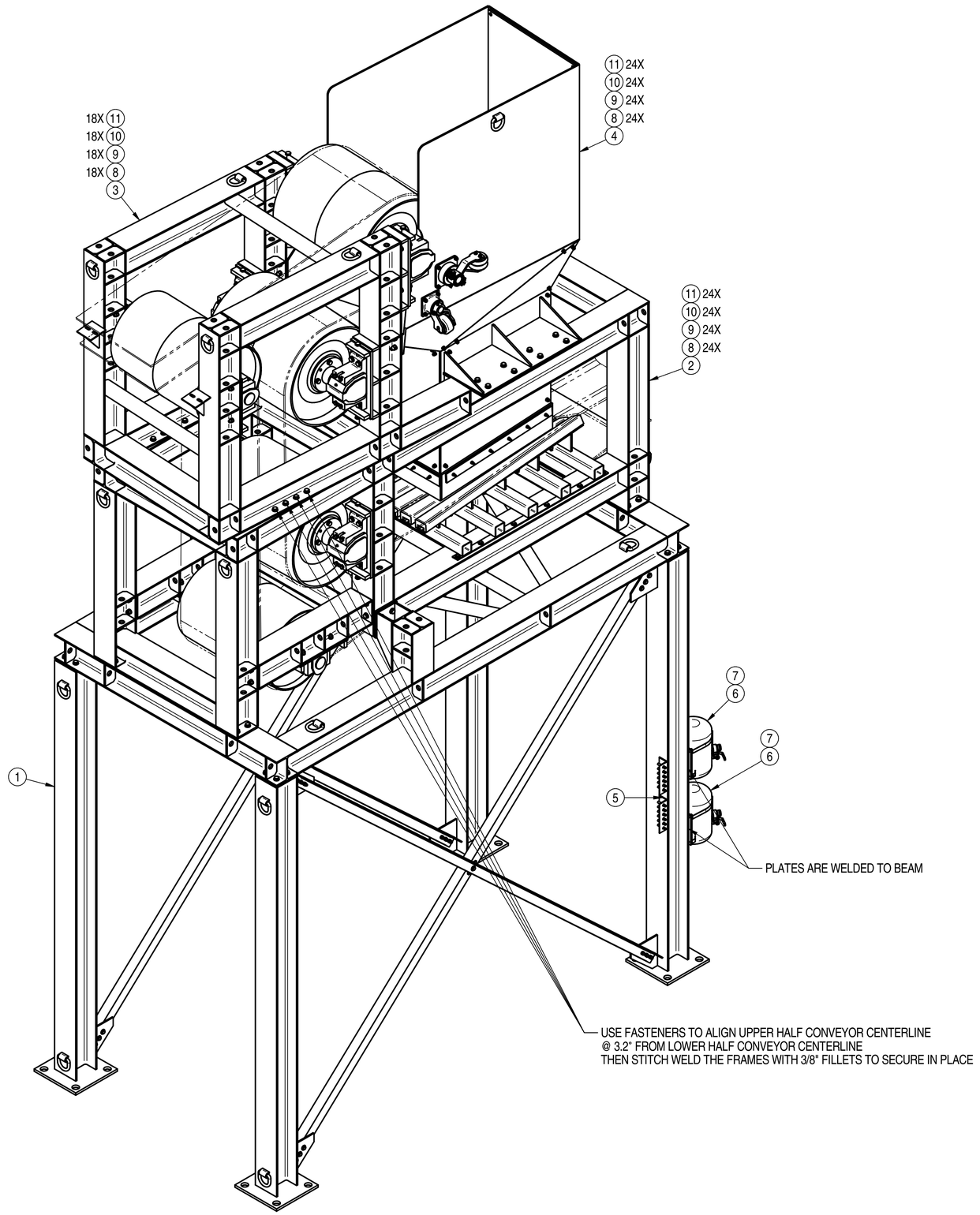

QTY	PART No.	DESCRIPTION	DWG No.	WT. Total (lbs)	ITEM
1	1051524	TRIPPER SUPPORT STAND ASSEMBLY	1051524	3590.6	1
1	1051497	30"BW TRIPPER LOWER HALF ASSEMBLY	1051497	6047.6	2
1	1051533	30"BW TRIPPER UPPER HALF ASSEMBLY	1051533	5504.5	3
1	1051688	30"BW TRIPPER TRANSITIONAL CHUTE ASSY	1051688	3094.1	4
1	1051752	NB TRIPPER ASSEMBLY GREASING CIRCUIT	1051752	50.1	5
2	4001918	AIR RESERVOIR KIT, BELT SCRAPER	4001918	71.8	6
2	A81860-7800	Ø0.38"HYD HOSE ASSY, 7800mm LG	A81860	0.0	7
66	608-179	HHCS, Ø3/4"-10UNCx2.5" G8		30.8	8
66	633-009	WASHER, PLAIN Ø3/4"		3.0	9
66	635-015	WASHER, LOCK Ø3/4"		2.8	10
66	625-008	NUT, Ø3/4"-10 UNC G8		9.2	11

TRC P/N 1051534
NB 30"BW TRIPPER ASSEMBLY
SCALE 1:16

PROPRIETARY NOTICE
The information disclosed hereon, is the sole property of The Robbins Company, and remains their sole property. It shall not be duplicated in full or part, used by, or disclosed to any other party without prior written consent of The Robbins Company. By accepting this information, recipient agrees to abide in total with this notice, without any modification whatsoever to the conditions. This material is on loan only, and is to be returned upon request to The Robbins Company.

MACHINE	NEXT ASSY
S.F. SUBWAY	1049679

UNLESS NOTED ALL DIMS ARE inch
TOLERANCES UNLESS NOTED

FAB (inch)		MACHINING (inch)	
0 - 1'	±1/16	FRACTION	±1/16
1' - 5'	±1/8	X.X	±.03
5' - 20'	±1/4	X.XX	±.015
20' +	±1/2	X.XXX	±.005
		ANGLES	±1°
THIRD ANGLE PROJECTION		SURFACE FINISH	125

DIMENSIONS (X) ARE REF
ALL GEOMETRIC DIMENSIONING & TOLERANCING PER ANSI Y14.5-2009

REV	DESCRIPTION	REV'D BY/ DATE	APP'D BY/ DATE

TITLE: NB 30"BW TRIPPER ASSEMBLY

SIZE: D | DWG No.: 1051534 | REV: 0 | SHT 1 OF 2 | SCALE: 1:16 | DO NOT SCALE

DRAWN BY: C.LEGG | DATE: 07/30/2012 | CHECKED STANDARDS: C.BESS | CHECKED DESIGN: C.BESS

UNIT OF MEASURE: Each | APPROVED BY: T.BESS

WEIGHT TOTAL: 18404.5 lbm | DATE: 08/17/2012

Robbins

www.TheRobbinsCompany.com

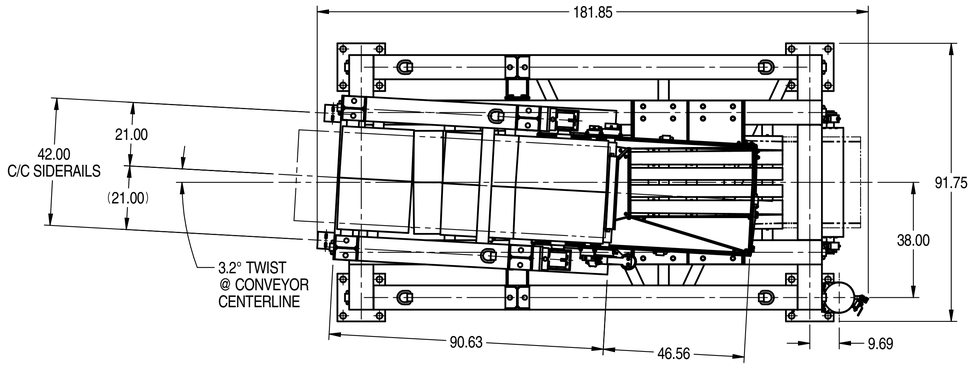

DIRECTION OF MUCK TRAVEL

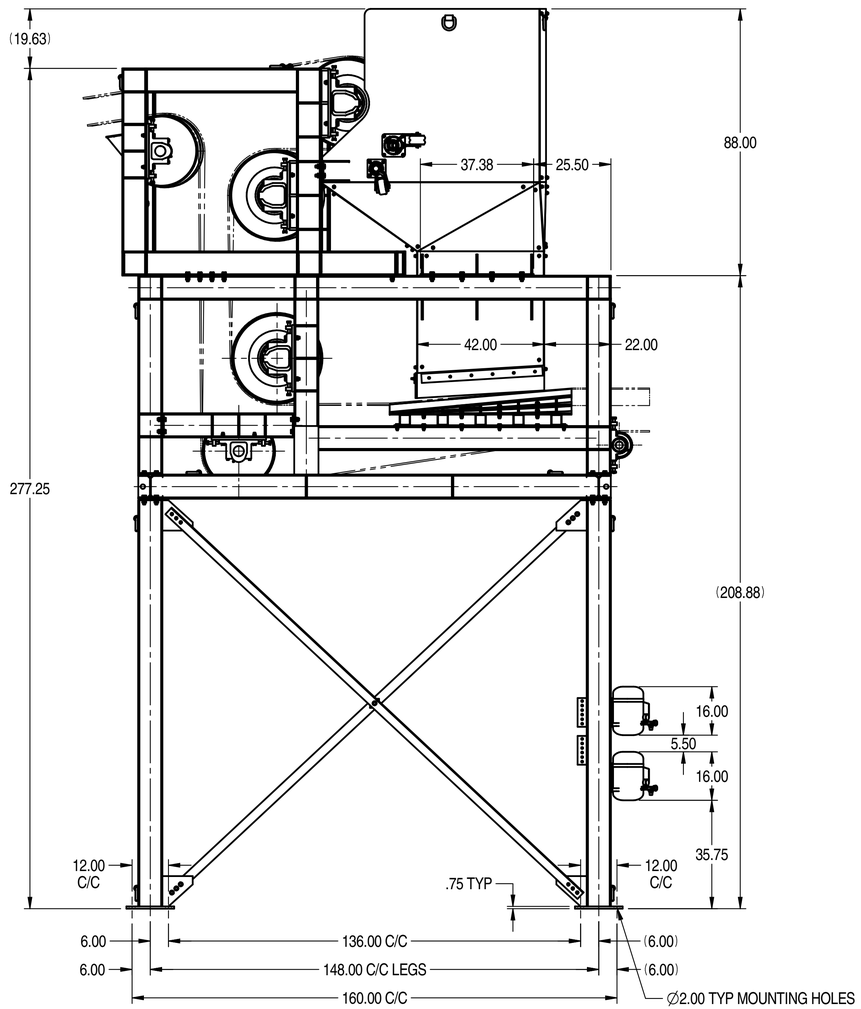

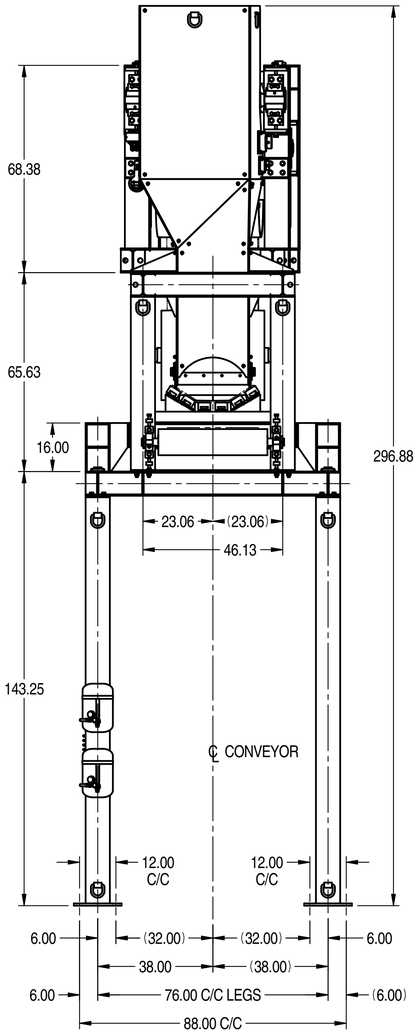

TRC P/N 1051534
NB 30"BW TRIPPER ASSEMBLY
SCALE 1:25

REV	DESCRIPTION	REV'D BY/ DATE	APP'D BY/ DATE

TITLE: NB 30"BW TRIPPER ASSEMBLY

MACHINE	NEXT ASSY
S.F. SUBWAY	1049679

UNLESS NOTED ALL DIMS ARE inch

TOLERANCES UNLESS NOTED

FAB (inch)		MACHINING (inch)	
0 - 1'	±1/16	FRACTION	±1/16
1' - 5'	±1/8	X.X	±.03
5' - 20'	±1/4	X.XX	±.015
20' +	±1/2	X.XXX	±.005
		ANGLES	±1°
THIRD ANGLE PROJECTION		SURFACE FINISH	125

DIMENSIONS (X) ARE REF

ALL GEOMETRIC DIMENSIONING & TOLERANCING PER ANSI Y14.5-2009

SIZE: D | DWG No.: 1051534 | REV: 0 | SHT 2 OF 2 | SCALE 1:25 | DO NOT SCALE

Robbins

DRAWN BY: C.LEGG | DATE: 07/30/2012 | CHECKED STANDARDS: C.BESS | CHECKED DESIGN: C.BESS

UNIT OF MEASURE: Each | WEIGHT TOTAL: 18404.5 lbm | APPROVED BY: T.BESS | DATE: 08/17/2012

PROPRIETARY NOTICE
The information disclosed hereon, is the sole property of The Robbins Company, and remains their sole property. It shall not be duplicated in full or part, used by, or disclosed to any other party without prior written consent of The Robbins Company. By accepting this information, recipient agrees to abide in total with this notice, without any modification whatsoever to the conditions. This material is on loan only, and is to be returned upon request to The Robbins Company.

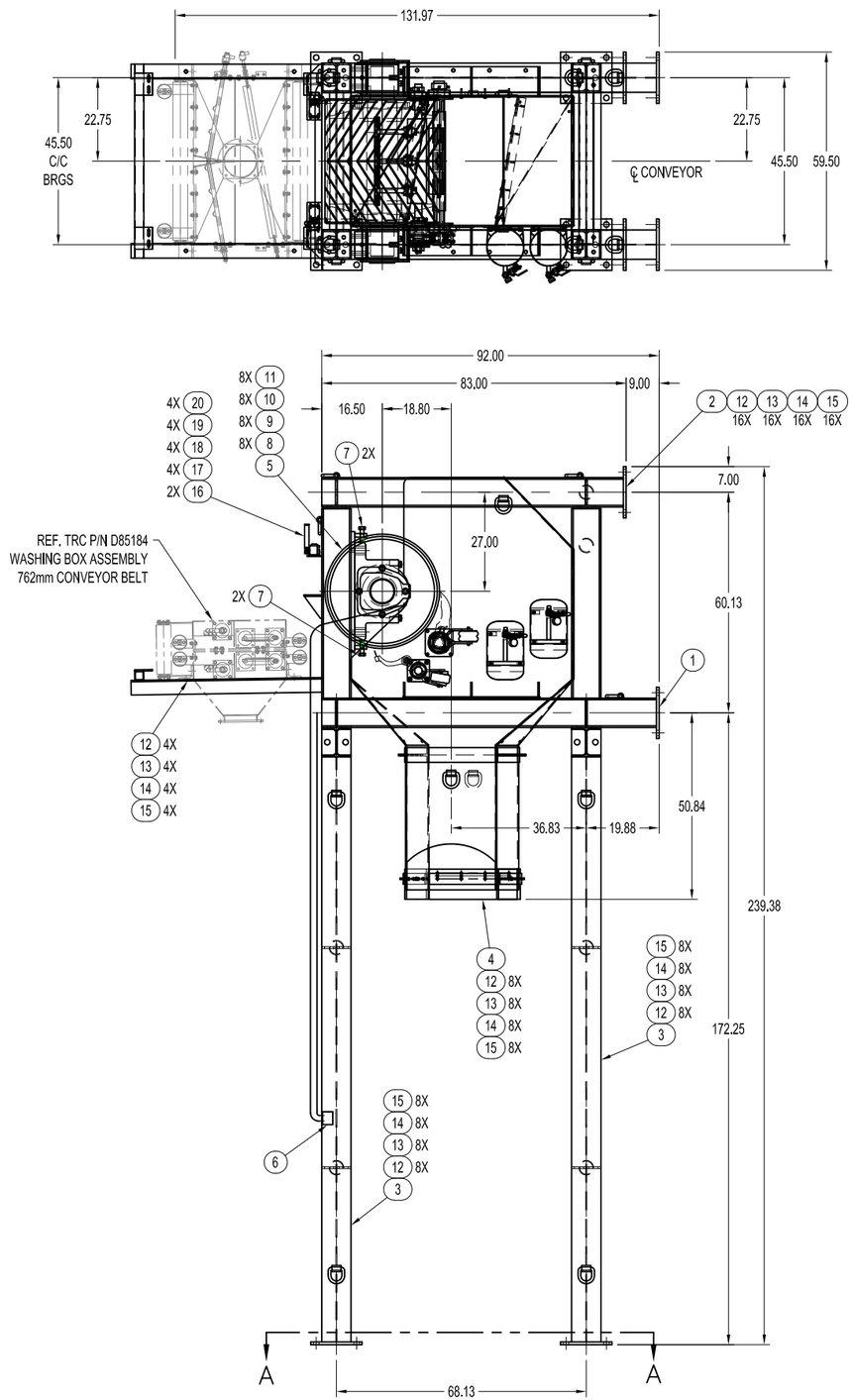

QTY	PART No.	DESCRIPTION	DWG No.	WT. Total	ITEM
1	1049919	DISCHARGE PULLEY SUPPORT WELDMENT	1049919	1689.9 lbm	1
1	1049920	DISCHARGE TOP WELDMENT	1049581	572.2 lbm	2
2	1049916	DISCHARGE DOUBLE LEG WELDMENT	1049916	2344.4 lbm	3
1	1050243	NORTHBOUND CONVEYOR 30"BW DISCHARGE HOOD KIT	1050243	2452.4 lbm	4
1	D86636	Ø30 X 34 FW SNUB PULLEY ASSEMBLY	D86636	2952 lbm	5
1	1049840	DISCHARGE ASSEMBLY GREASE CIRCUIT	1049840	15.2 lbm	6
4	608-429F	HHCS, Ø1"-8UNC X 3 1/2" Lg FULLY THREADED		0.1 lbm	7
8	608-436	HHCS, Ø1"-8UNC X 6 1/2" Lg G8		0.1 lbm	8
8	633-011	WASHER, PLAIN 1"		0.1 lbm	9
8	635-017	WASHER, LOCK 1"		0.1 lbm	10
8	625-010	NUT, Ø1"-8UNC G8		0.1 lbm	11
44	608-179	HHCS, Ø3/4"-10UNC X 2 1/2" Lg G8		0.1 lbm	12
44	633-009	WASHER, PLAIN 3/4"		0.1 lbm	13
44	635-015	WASHER, LOCK 3/4"		0.1 lbm	14
44	625-008	NUT, Ø3/4"-10UNC G8		0.1 lbm	15
1 REF	A83275-1	BELT MISALIGNMENT SWITCH	A83275	-	16
1 4	608-005	HHCS, Ø1/4"-20UNC X 1" Lg G8		0.1 lbm	17
1 4	633-002	WASHER, PLAIN 1/4"		0.1 lbm	18
1 4	635-008	WASHER, LOCK 1/4"		0.1 lbm	19
1 4	625-001	NUT, Ø1/4"-20UNC G8		0.1 lbm	20

REF. TRC P/N 1049918
NORTHBOUND CONVEYOR 30"BW DISCHARGE ASSEMBLY
1:20

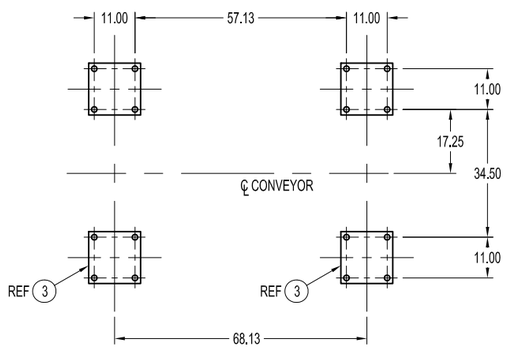

SECTION A–A
1:20

1049918

REV	DESCRIPTION	REV'D BY/ DATE	APP'D BY/ DATE
1	ADDED ITEMS 16-20, UPDATED VIEWS	NME 8/1/12	TJB 8/1/12

MACHINE	NEXT ASSY
S.F. SUBWAY	1049679

UNLESS NOTED ALL DIMS ARE Inch
TOLERANCES UNLESS NOTED
0 - 1" ± 1/16
1" - 5" ± 1/8
5 - 20" ± 1/4
20" + ± 1/2
FRACTIONS ± 1/16
.X ± .03
.XX ± .015
.XXX ± .005
ANGLES ± 1
SURFACE 250
FINISH
THIRD ANGLE PROJECTION
DIMENSIONS (X) ARE REFERENCE
ALL GEOMETRIC DIMENSIONING & TOLERANCING PER ANSI Y14.5-2009

TITLE: NORTHBOUND CONVEYOR 30"BW DISCHARGE ASSEMBLY

SIZE D | DWG No. 1049918 | REV 1 | SHT 1 OF 1 | SCALE 1:20 | DO NOT SCALE

DRAWN BY N.EISENBERG DATE 6/6/2012
CHECKED STANDARDS C.BESS
CHECKED DESIGN C.BESS
WEIGHT TOTAL 10027.5 lbm
APPROVED BY T.BESS DATE 6/21/2012

Robbins

www.TheRobbinsCompany.com

PROPRIETARY NOTICE
The information disclosed herein is the sole property of The Robbins Company, and remains that sole property, it shall not be disclosed to, in whole or in part, or used by, or disclosed to any other party without prior written consent of The Robbins Company. Any copying this information, reproduction, or distribution in any form, in whole or in part, is prohibited without the prior written consent of The Robbins Company. Any copying this information, reproduction, or distribution in any form, in whole or in part, is prohibited without the prior written consent of The Robbins Company.

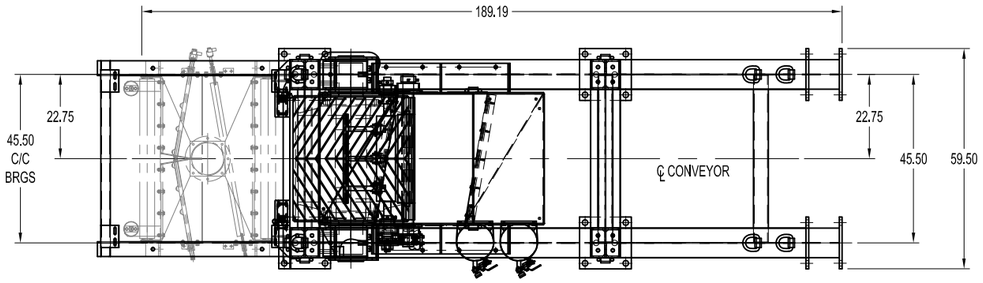

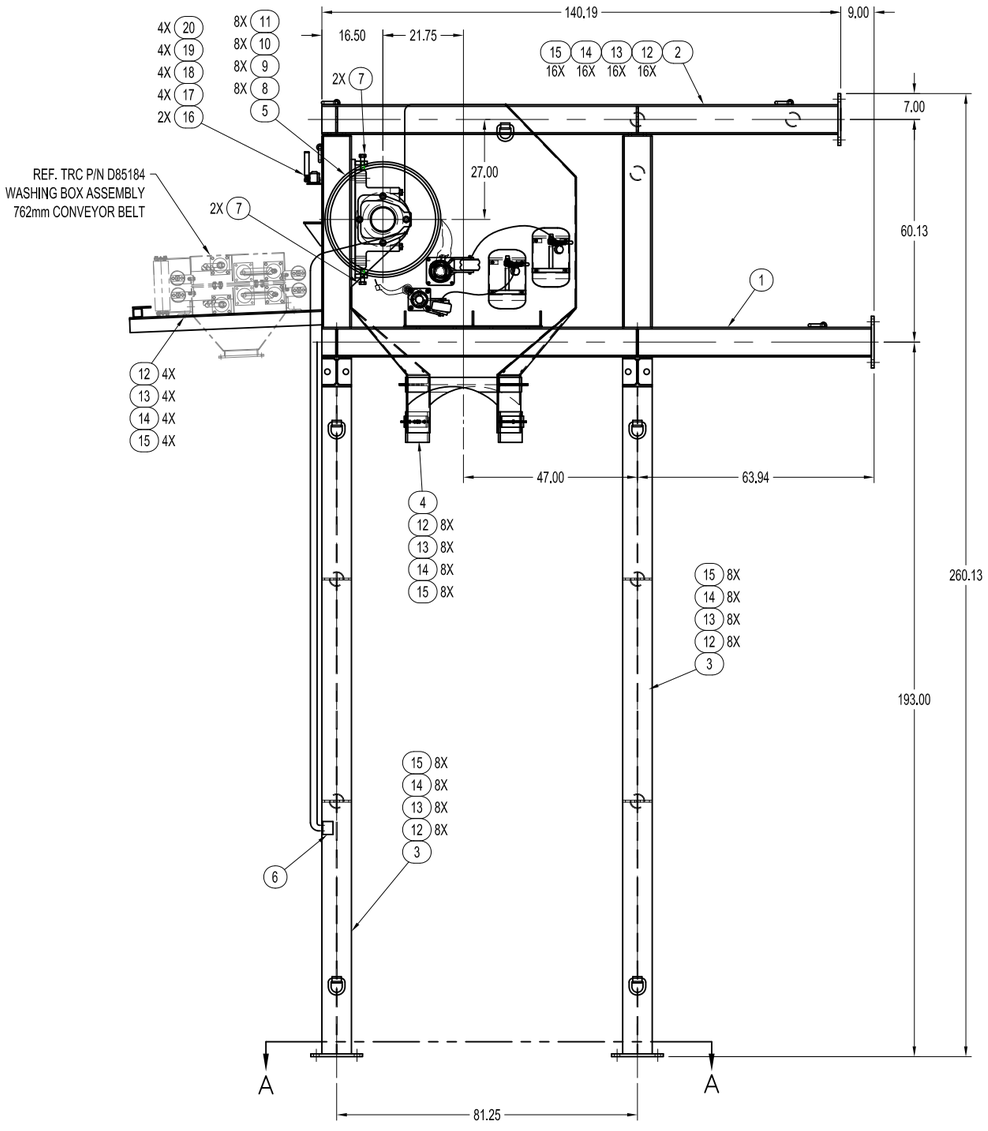

	QTY	PART No.	DESCRIPTION	DWG No.	WT. Total	ITEM
	1	1049441	DISCHARGE PULLEY SUPPORT WELDMENT	1049441	1987.7 lbm	1
	1	1049581	DISCHARGE TOP WELDMENT	1049581	904.3 lbm	2
	2	1049439	DISCHARGE DOUBLE LEG WELDMENT	1049439	2560.6 lbm	3
	1	1049736	SOUTHBOUND CONVEYOR 30"BW DISCHARGE HOOD KIT	1049736	2097.7 lbm	4
	1	D86636	Ø30 X 34 FW SNUB PULLEY ASSEMBLY	D86636	2952 lbm	5
	1	1049840	DISCHARGE ASSEMBLY GREASE CIRCUIT	1049840	15.2 lbm	6
	4	608-429F	HHCS, Ø1"-8UNC X 3 1/2" Lg FULLY THREADED		0.1 lbm	7
	8	608-436	HHCS, Ø1"-8UNC X 6 1/2" Lg G8		0.1 lbm	8
	8	633-011	WASHER, PLAIN 1"		0.1 lbm	9
	8	635-017	WASHER, LOCK 1"		0.1 lbm	10
	8	625-010	NUT, Ø1"-8UNC G8		0.1 lbm	11
	44	608-179	HHCS, Ø3/4"-10UNC X 2 1/2" Lg G8		0.1 lbm	12
	44	633-009	WASHER, PLAIN 3/4"		0.1 lbm	13
	44	635-015	WASHER, LOCK 3/4"		0.1 lbm	14
	44	625-008	NUT, Ø3/4"-10UNC G8		0.1 lbm	15
1	REF	A83275-1	BELT MISALIGNMENT SWITCH	A83275	-	16
1	4	608-005	HHCS, Ø1/4"-20UNC X 1" Lg G8		0.1 lbm	17
1	4	633-002	WASHER, PLAIN 1/4"		0.1 lbm	18
1	4	635-008	WASHER, LOCK 1/4"		0.1 lbm	19
1	4	625-001	NUT, Ø1/4"-20UNC G8		0.1 lbm	20

REF. TRC P/N 1049409
SOUTHBOUND CONVEYOR 30"BW DISCHARGE ASSEMBLY
1:20

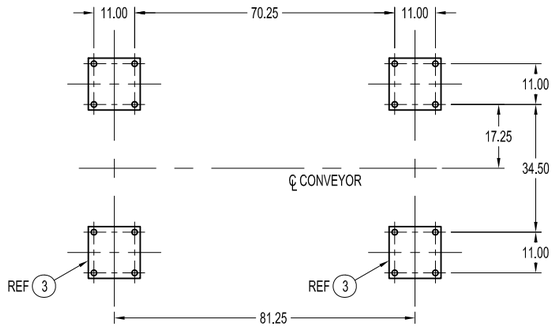

SECTION A–A
1:20

REV	DESCRIPTION	REV'D BY/ DATE	APP'D BY/ DATE
1	ADDED ITEMS 16-20, UPDATED VIEWS	NME 8/1/12	TJB 8/1/12

TITLE: SOUTHBOUND CONVEYOR 30"BW DISCHARGE ASSEMBLY

MACHINE	NEXT ASSY
S.F. SUBWAY	1049679

UNLESS NOTED ALL DIMS ARE inch
TOLERANCES UNLESS NOTED
FRACTIONS ±1/16 | .X ±.03 | .XX ±.015 | .XXX ±.005 | ANGLES ±1° | SURFACE 125
DIMENSIONS (X) ARE REFERENCE
ALL GEOMETRIC DIMENSIONING & TOLERANCING PER ANSI/Y14.5-2009

USE: D | DWG No.: 1049409 | REV: 1 | SHT 1 OF 1 | SCALE: 1:20 | DO NOT SCALE

DRAWN BY: N.EISENBERG DATE 6/6/2012
CHECKED STANDARDS: C.BESS
CHECKED DESIGN: C.BESS
WEIGHT TOTAL: 10518.7 lbm
APPROVED BY: T.BESS DATE 6/21/2012

Robbins

www.TheRobbinsCompany.com

PROPRIETARY NOTICE
This information disclosed herein is the property of The Robbins Company, and remains their sole property. It shall not be copied, used or disclosed to others in whole or in part without prior written consent of The Robbins Company. Any copies of this drawing made by any method must also contain a copy of this notice. Upon request, any drawings loaned to others will be promptly returned. The recipient shall take such steps as may be necessary to protect the information disclosed herein.

1049409

NOTES:

1. TORQUE FASTENERS PER MANUFACTURER'S RECOMMENDATION.
2. ALL WELDS ARE TO BE 1/4" CONTINUOUS FILLETS UNLESS NOTED OTHERWISE.
3. REMOVE ALL BURRS AND BREAK SHARP EDGES.
4. ALL WELDING SHALL MEET THE REQUIREMENTS OF THE LATEST EDITION OF THE AWS STRUCTURAL WELDING CODE - ALL SECTIONS AS APPLICABLE UNLESS OTHERWISE NOTED. USE E70XX LOW HYDROGEN ELECTRODES OR EQUIVALENT.
5. PERMANENTLY AFFIX APPROPRIATE ROBBINS PART NUMBER.

QTY	PART No.	DESCRIPTION	DWG No.	WT. Total	ITEM
12	608-105	HHCS, Ø1/2"-13 UNC X 2" G8	-	1.2 lb	22
8	608-103	HHCS, Ø1/2"-13 UNC X 1 1/2" G8	-	0.8 lb	23
20	633-006	WASHER, PLAIN 1/2"	-	2.0 lb	24
20	635-012	WASHER, LOCK 1/2"	-	2.0 lb	25
20	625-005	HEX NUT, Ø1/2"-13 UNC G8	-	2.0 lb	26

QTY	PART No.	DESCRIPTION	DWG No.	WT. Total	ITEM
1	1051276	30"BW SINGLE DRIVE BOOSTER FRAME	1051276	2930.0 lb	1
1	1050271	Ø30 X 34 FW DRIVE PULLEY ASSEMBLY	1050271	3090.0 lb	2
1	D86636-1	Ø30 X 34 FW SNUB PULLEY ASSEMBLY	D86636	2952.0 lb	3
1	D86614-1	SINGLE DRIVE GREASING CIRCUIT	D86614-1	13.1 lb	4
1	A84282-1	30mm SPEED SENSOR SWITCH	A84282	1.0 lb	5
1	D86093-1	BELT SLIP SWITCH BRACKET	D86093	0.9 lb	6
1	D85197-1	PULLEY MOD KIT SCHEDULE	D85197	1.1 lb	7
1	1051109	200HP POWER UNIT W/ MOTOR F2	1051109	4467.0 lb	8
1	B86642-1	TORQUE LINK, 4-15/32" C/C Ø1 15/16 PIN	B86642	6.7 lb	9
2	81480X1	Ø1 15/16" TYPE A PIN, 5 1/4" LONG	81480	8.8 lb	10
4	639-108	COTTER PIN, Ø3/16" X 3 1/2"	-	0.4 lb	11
1	4000806	EXTRA HEAVY DUTY PRIMARY WIPER	4000806	349.0 lb	12
1	4001918	AIR RESERVOIR KIT, BELT WIPER	4001918	36.0 lb	13
1	A81860-2800	Ø0.38" WITH JIC ENDS (2800mm)	A81860	2.0 lb	14
1	1045116	30"BW TRANSITION IMPACT BED	1045116	606.0 lb	15
1	1051273	30"BW BOOSTER HOPPER ASSEMBLY	1051273	1320.0 lb	16
8	600-418F	HB, Ø1"-8 UNC X 3" G8	-	0.8 lb	17
16	608-434	HHCS, Ø1"-8 UNC X 5 1/2" G8	-	1.6 lb	18
16	633-011	WASHER, PLAIN 1"	-	1.6 lb	19
16	635-017	WASHER, LOCK 1"	-	1.6 lb	20
16	625-010	HEX NUT, Ø1"-8 UNC G8	-	1.6 lb	21

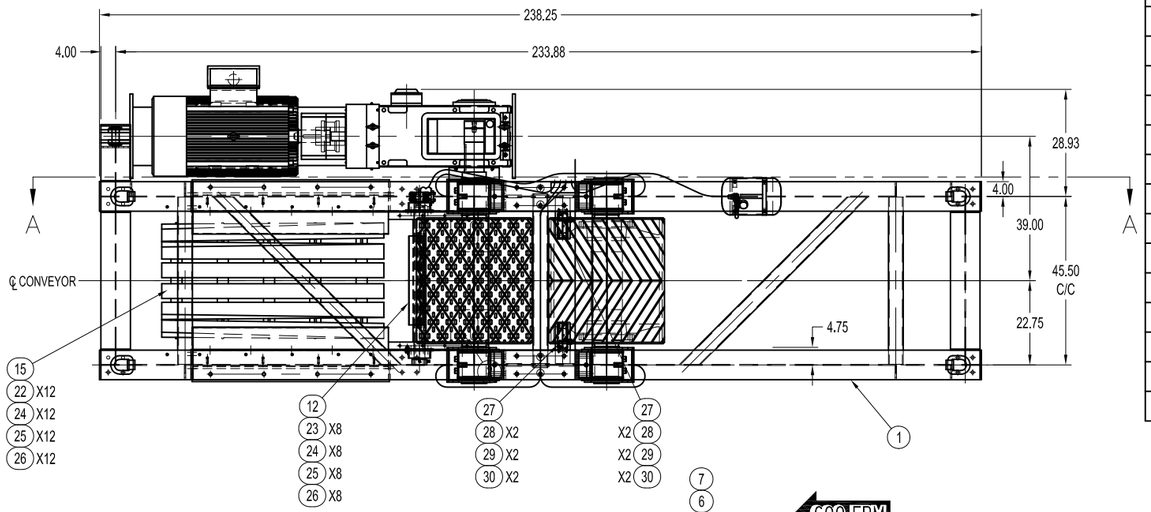

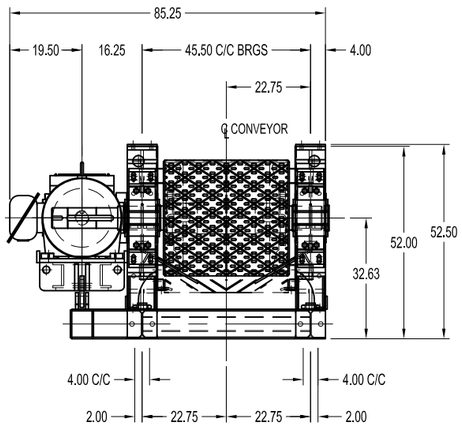

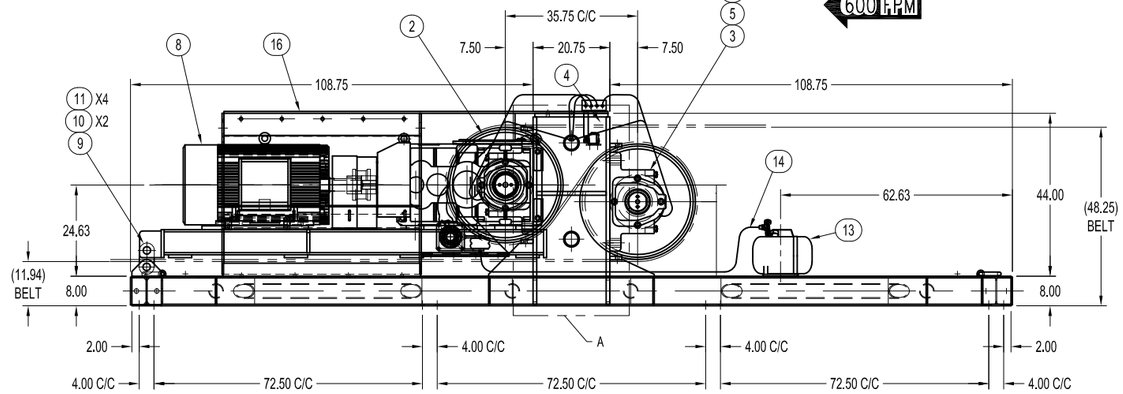

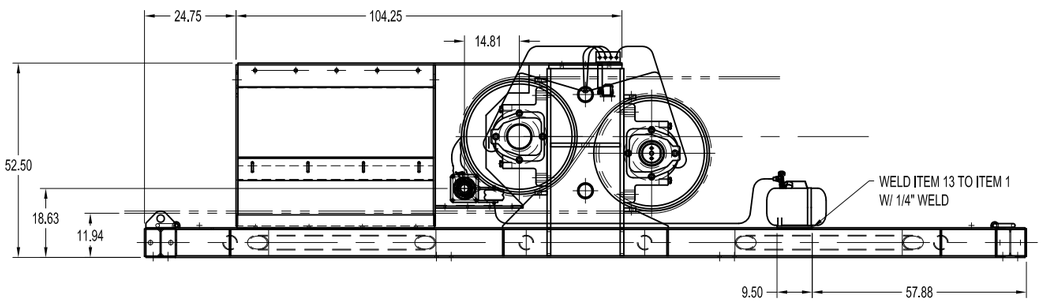

SECTION A–A

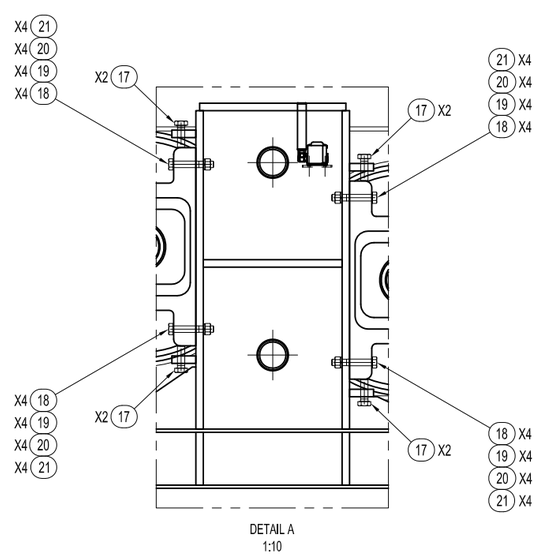

DETAIL A
1:10

REV	DESCRIPTION	REVD BY / DATE	APP'D BY / DATE
1	UPDATE ITEM# 8 UPDATE WEIGHT	JJC 7/20/2012	CHB

PROPRIETARY NOTICE:
This information disclosure document is the property of The Robbins Company, and remains their sole property. It shall not be copied, used or disclosed to others for any purpose without prior written consent of The Robbins Company. Any such copies or disclosures shall have this notice included on them. The data is loaned with the trade, without any consideration, and is to be returned upon request to The Robbins Company.

MACHINE	NEXT ASSY
S.F. SUBWAY	1049679

UNLESS NOTED ALL DIMS ARE inch
TOLERANCES UNLESS NOTED
FRACTIONS ± 1/16
.X ± .03
.XX ± .015
.XXX ± .005
ANGLES ± 1
SURFACE ROUGHNESS
DIMENSIONS ARE REFERENCE
ALL GEOMETRIC DIMENSIONING & TOLERANCING PER ANSI Y14.5-2009

TITLE: 30"BW CARRYING BOOSTER ASSEMBLY- SINGLE 200HP

SIZE: D | DWG No.: 1051295 | REV: 1 | SHT 1 OF 1 | SCALE: 1:20 DO NOT SCALE

DRAWN BY: J.CHANCEY DATE: 7/20/2012
CHECKED STANDARDS: C.BESS
CHECKED DESIGN: C.BESS
APPROVED BY: T.BESS DATE:
WEIGHT TOTAL: 15799.2 lb

Robbins

www.TheRobbinsCompany.com

1051295

NOTES:

1. TORQUE FASTENERS PER MANUFACTURER'S RECOMMENDATION.
2. ALL WELDS ARE TO BE 1/4" CONTINUOUS FILLETS UNLESS NOTED OTHERWISE.
3. REMOVE ALL BURRS AND BREAK SHARP EDGES.
4. ALL WELDING SHALL MEET THE REQUIREMENTS OF THE LATEST EDITION OF THE AWS STRUCTURAL WELDING CODE - ALL SECTIONS AS APPLICABLE UNLESS OTHERWISE NOTED. USE E70XX LOW HYDROGEN ELECTRODES OR EQUIVALENT.
5. PERMANENTLY AFFIX APPROPRIATE ROBBINS PART NUMBER.

QTY	PART No.	DESCRIPTION	DWG No.	WT. Total	ITEM
REF	A83275-1	BELT MISALIGNMENT SWITCH	A83275	-	27
4	608-006	HHCS, Ø1/4"-20 UNC 1 1/4" G8	-	0.1 lb	28
4	635-008	WASHER, LOCK 1/4"	-	0.1 lb	29
4	625-001	HEX NUT, Ø1/4"-20 UNC G8	-	0.1 lb	30

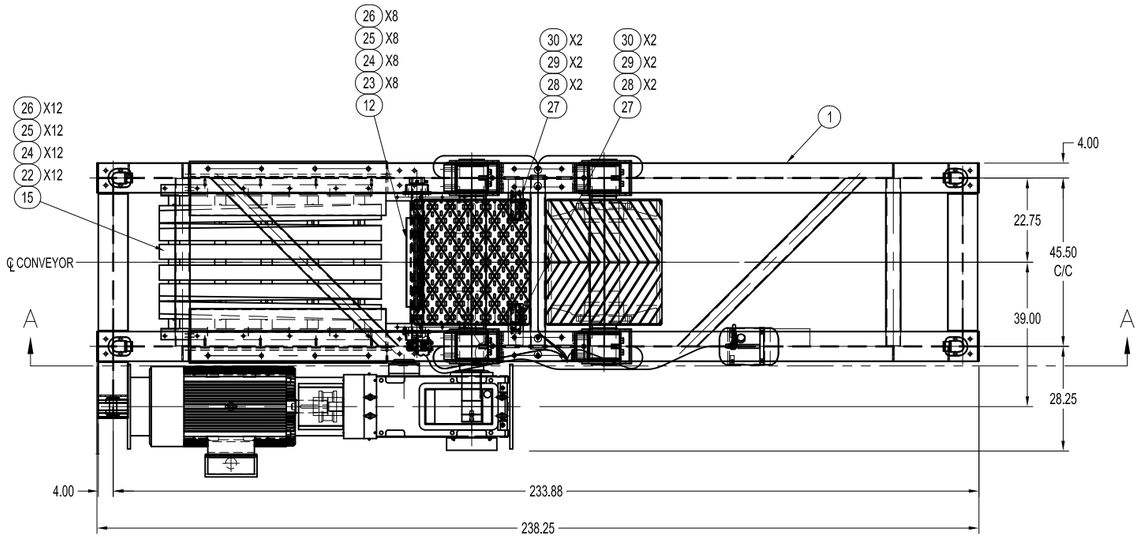

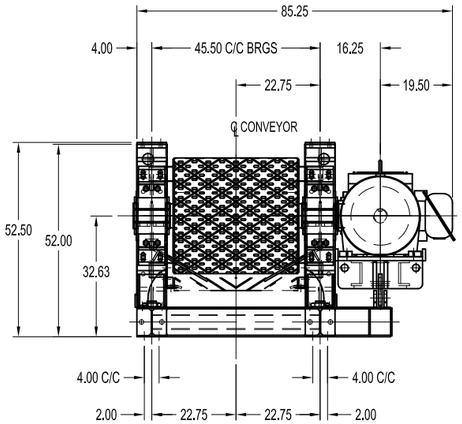

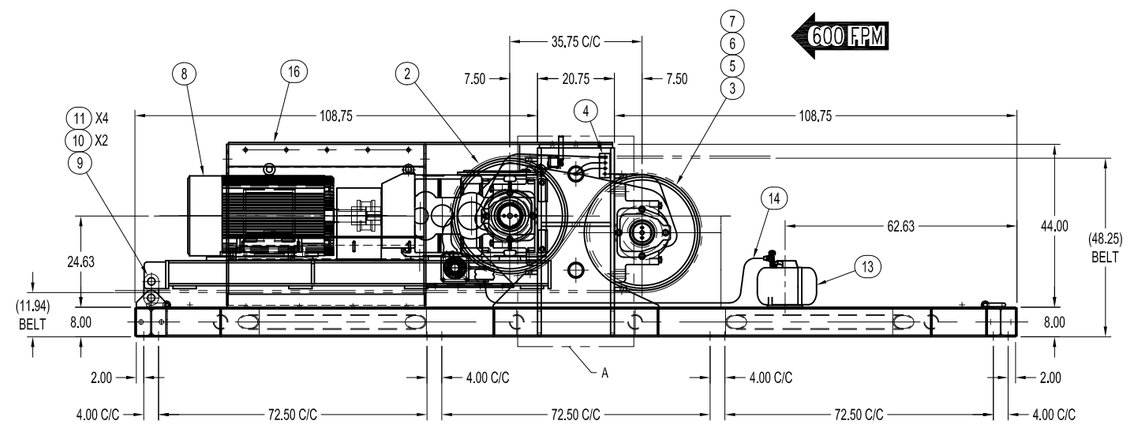

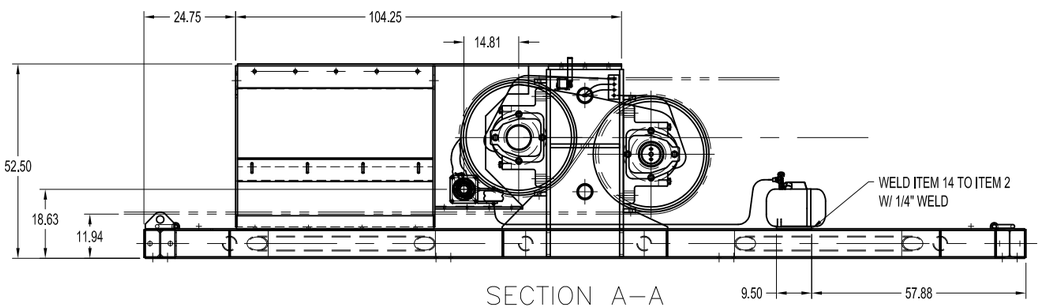

SECTION A–A

QTY	PART No.	DESCRIPTION	DWG No.	WT. Total	ITEM
1	4002516	30"BW SINGLE DRIVE BOOSTER FRAME	4002516	2930.0 lb	1
1	1050271	Ø30 X 34 FW DRIVE PULLEY ASSEMBLY	1050271	3090.0 lb	2
1	D86636-1	Ø30 X 34 FW SNUB PULLEY ASSEMBLY	D86636	2952.0 lb	3
1	1045146	SINGLE DRIVE GREASING CIRCUIT	1045146	13.1 lb	4
1	A84282-1	30mm SPEED SENSOR SWITCH	A84282	1.0 lb	5
1	D86093-1	BELT SLIP SWITCH BRACKET	D86093	0.9 lb	6
1	D85197-1	PULLEY MOD KIT SCHEDULE	D85197	1.1 lb	7
1	1051102	200HP POWER UNIT W/ MOTOR F1	1051102	4467.0 lb	8
1	B86642-1	TORQUE LINK, 4-15/32" C/C Ø1 15/16 PIN	B86642	6.7 lb	9
2	81480X1	Ø1 15/16" TYPE A PIN, 5 1/4" LONG	81480	8.8 lb	10
4	639-108	COTTER PIN, Ø3/16" X 3 1/2"	-	0.4 lb	11
1	4000806	EXTRA HEAVY DUTY PRIMARY WIPER	4000806	349.0 lb	12
1	4001918	AIR RESERVOIR KIT, BELT WIPER	4001918	36.0 lb	13
1	A81860-2800	Ø0.38" WITH JIC ENDS (2800mm)	A81860	2.0 lb	14
1	1045116	30"BW TRANSITION IMPACT BED	1045116	606.0 lb	15
1	1051273	30"BW BOOSTER HOPPER ASSEMBLY	1051273	1320.0 lb	16
8	600-418F	HB, Ø1"-8 UNC X 3" G8	-	0.1 lb	17
16	608-434	HHCS, Ø1"-8 UNC X 5 1/2" G8	-	0.1 lb	18
16	633-011	WASHER, PLAIN 1"	-	0.1 lb	19
16	635-017	WASHER, LOCK 1"	-	0.1 lb	20
16	625-010	HEX NUT, Ø1"-8 UNC G8	-	0.1 lb	21
12	608-105	HHCS, Ø1/2"-13 UNC X 2" G8	-	0.1 lb	22
8	608-103	HHCS, Ø1/2"-13 UNC X 1 1/2" G8	-	0.1 lb	23
20	633-006	WASHER, PLAIN 1/2"	-	0.1 lb	24
20	635-012	WASHER, LOCK 1/2"	-	0.1 lb	25
20	625-005	HEX NUT, Ø1/2"-13 UNC G8	-	0.1 lb	26

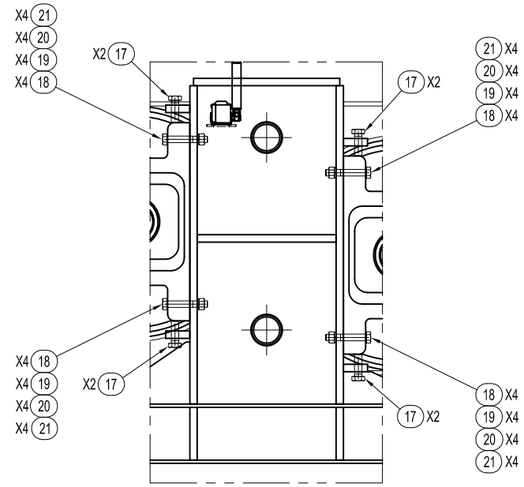

DETAIL A
1:10

REV	DESCRIPTION	REV'D BY/ DATE	APP'D BY/ DATE
2	UPDATE ITEM# 8 UPDATE WEIGHT	JJC 9/21/2012	CHB
1	ADD ITEMS 27-30	JJC 7/2012	CHB

PROPRIETARY NOTICE
The information on this drawing is the property of The Robbins Company, and reveals trade secrets of The Robbins Company. It is loaned subject to return upon demand, and may not be copied or used in whole or in part without the written consent of The Robbins Company, and may not be disclosed to others for any purpose without such written consent of The Robbins Company. Any person borrowing this drawing is liable for loss or damage arising from any unauthorized use.

MACHINE	NEXT ASSY
S.F. SUBWAY	1049679

UNLESS NOTED ALL DIMS ARE Inch
TOLERANCES UNLESS NOTED
MACHINED SURFACES: FRACTIONS ±1/16; 0 - 1" ± 1/16; 1" - 5" ± 1/8; 5" - 20" ± 1/4; 20" + ± 1/2; X ± .03; .XX ± .015; .XXX ± .005; ANGLES ± 1°; SURFACE FINISH 125RMS
THIRD ANGLE PROJECTION
DIMENSIONS (X) ARE REFERENCE
ALL GEOMETRIC DIMENSIONING & TOLERANCING PER ANSI Y14.5-2009

TITLE: 30"BW CARRYING BOOSTER ASSEMBLY- SINGLE 200HP

SIZE D | DWG No. 1051235 | REV 2 | SHT 1 OF 1 | SCALE 1:20 DO NOT SCALE

DRAWN BY J.CHANCEY DATE 7/19/2012
CHECKED BY/ENG'D C.BESS
CHECKED DESIGN C.BESS
WEIGHT TOTAL 15799.2 lb
APPROVED BY T.BESS DATE 7/20/2012

Robbins

www.TheRobbinsCompany.com

1051235

NOTES:

1. TORQUE FASTENERS PER MANUFACTURERS RECOMMENDATION.

QTY	PART No.	DESCRIPTION	DWG No.	WT. Total	ITEM
REF	A83275-1	BELT MISALIGNMENT SWITCH	A83275	-	22
4	608-006	HHCS, Ø1/4"-20 UNC X 1 1/4" G8	-	0.4 lb	23
4	635-008	WASHER, LOCK 1/4"	-	0.4 lb	24
4	625-001	HEX NUT, Ø1/4"-20 UNC G8	-	0.4 lb	25

QTY	PART No.	DESCRIPTION	DWG No.	WT. Total	ITEM
1	1051460	30"BW RETURN BOOSTER FRAME WELDMENT	1051460	2412.0 lb	1
1	1050271	Ø30 X 34 FW DRIVE PULLEY ASSEMBLY	1050271	3090.0 lb	2
1	D86636-1	Ø30 X 34 FW SNUB PULLEY ASSEMBLY	D86636	2952.0 lb	3
1	1045146	DRIVE GREASE CIRCUIT	1045146	13.1 lb	4
1	A84282-1	30mm SPEED SENSOR SWITCH	A84282	1.0 lb	5
1	D86093-1	BELT SLIP SWITCH BRACKET	D86093	0.9 lb	6
1	D85197-1	PULLEY MOD KIT SCHEDULE	D85197	1.1 lb	7
1	1051206	100HP POWER UNIT W/ MOTOR F1	1051206	4067.2 lb	8
1	B86642-1	TORQUE LINK, 4 15/32" C/C Ø15/16" PIN	D86642	6.7 lb	9
2	81480X1	Ø1 15/16" TYPE A PIN, 5 1/4"	81480	8.8 lb	10
4	639-108	COTTER PIN, Ø3/16" X 3 1/2"	-	0.4lb	11
8	600-418F	HB, Ø1"-8 UNC X 3"	-	0.8 lb	12
16	608-434	HHCS, Ø1"-8 UNC X 5 1/2"	-	1.6 lb	13
16	633-011	WASHER, PLAIN 1"	-	1.6 lb	14
16	635-017	WASHER, LOCK 1"	-	1.6 lb	15
1	4002515	30"BW SIDERAIL STAND 34.56" TALL	4002515	32.5 lb	17
4	608-104	HHCS, Ø1/2"-13 UNC X 1.75" G8	-	0.4 lb	18
4	633-006	WASHER, PLAIN 1/2"	-	0.4 lb	19
4	635-012	WASHER, LOCK 1/2"	-	0.4 lb	20
4	625-005	NUT, Ø1/2"-13 UNC G8	-	0.4 lb	21

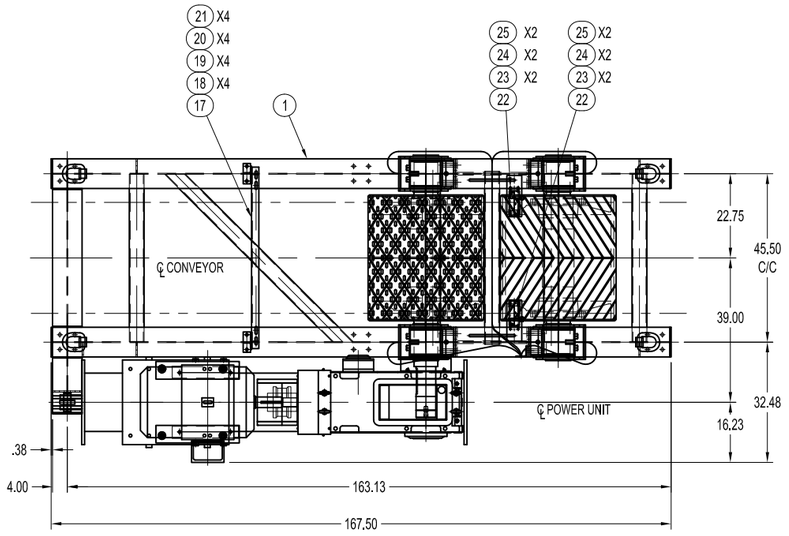

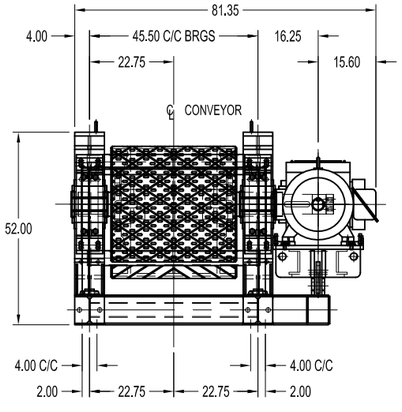

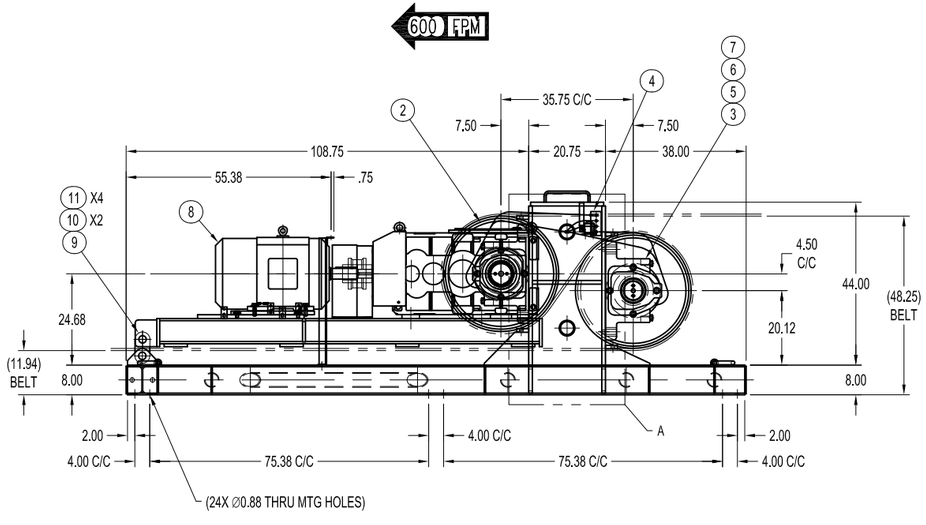

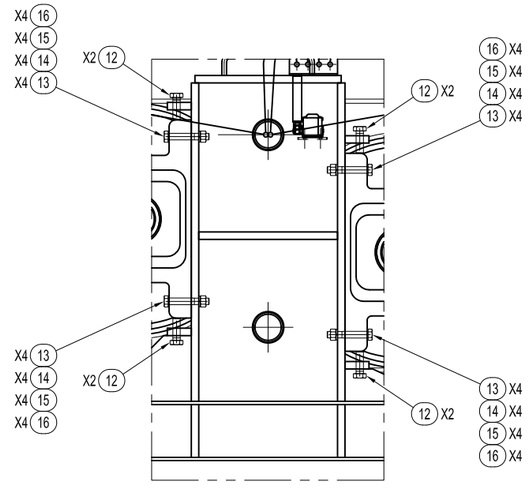

DETAIL A
1:10

REV	DESCRIPTION	REV'D BY/ DATE	APP'D BY/ DATE
2	UPDATE ITEM# 8 UPDATE WEIGHT	JJC 9/20/2012	CHB
1	CHANGED DESCRIPTION	JWS 7/30/12	CHB 7/30/12

MACHINE	NEXT ASSY
S.F. SUBWAY	1049679

UNLESS NOTED ALL DIMS ARE inch
TOLERANCES UNLESS NOTED
0 - 1 ± 1/16 | 1 - 5 ± 1/8 | 5 - 20 ± 1/4 | 20 + ± 1/2
FRACTIONS 1/16
.X ± .03 | .XX ± .015 | .XXX ± .005
ANGLES ± 1°
SURFACE FINISH 125
DIMENSIONS (X) ARE REFERENCE
ALL GEOMETRIC DIMENSIONING & TOLERANCING PER ANSI Y14.5-2009

TITLE: 30"BW RETURN BOOSTER ASSEMBLY- SINGLE 100HP

SIZE D | DWG No. 1051296 | REV 2 | SHT 1 OF 1 | SCALE 1:20 DO NOT SCALE

DRAWN BY J.CHANCEY | DATE 7/20/2012
CHECKED BY/DWG C.BESS
CHECKED BY/ENG C.BESS
APPROVED BY T.BESS | DATE 7/24/2012
WEIGHT TOTAL 12594.1 lb

Robbins

www.TheRobbinsCompany.com

1051296

PROPRIETARY NOTICE
This information is the property of The Robbins Company and may not be copied, used or disclosed in whole or in part without prior written consent of The Robbins Company. It shall not be loaned, transferred or reproduced and shall be surrendered upon request. Any unauthorized use of this drawing is to be reported to The Robbins Company.

NOTES:

1. TORQUE FASTENERS PER MANUFACTURERS RECOMMENDATION.

QTY	PART No.	DESCRIPTION	DWG No.	WT. Total	ITEM
REF	A83275-1	BELT MISALIGNMENT SWITCH	A83275	-	22
4	608-006	HHCS, Ø1/4"-20 UNC X 1 1/4" G8	-	0.1 lb	23
4	635-008	WASHER, LOCK 1/4"	-	0.1 lb	24
4	625-001	HEX NUT, Ø1/4"-20 UNC G8	-	0.1 lb	25

QTY	PART No.	DESCRIPTION	DWG No.	WT. Total	ITEM
1	4002446	30"BW RETURN BOOSTER FRAME WELDMENT	4002446	2412.0 lb	1
1	1050271	Ø30 X 34 FW DRIVE PULLEY ASSEMBLY	1050271	3090.0 lb	2
1	D86636-1	Ø30 X 34 FW SNUB PULLEY ASSEMBLY	D86636	2952.0 lb	3
1	D86614-1	DRIVE GREASE CIRCUIT	D86614	13.1 lb	4
1	A84282-1	30mm SPEED SENSOR SWITCH	A84282	1.0 lb	5
1	D86093-1	BELT SLIP SWITCH BRACKET	D86093	0.9 lb	6
1	D85197-1	PULLEY MOD KIT SCHEDULE	D85197	1.1 lb	7
1	1051208	100HP POWER UNIT W/ MOTOR F2	1051208	4067.2 lb	8
1	B86642-1	TORQUE LINK, 4 15/32" C/C Ø15/16" PIN	D86642	6.7 lb	9
2	81480X1	Ø1 15/16" TYPE A PIN, 5 1/4"	81480	8.8 lb	10
4	639-108	COTTER PIN, Ø3/16" X 3 1/2"	-	0.1 lb	11
8	600-418F	HB, Ø1"-8 UNC X 3"	-	0.1 lb	12
16	608-434	HHCS, Ø1"-8 UNC X 5 1/2"	-	0.1 lb	13
16	633-011	WASHER, PLAIN 1"	-	0.1 lb	14
16	635-017	WASHER, LOCK 1"	-	0.1 lb	15
1	4002515	30"BW SIDERAIL STAND 34.56" TALL	4002515	32.5 lb	17
4	608-104	HHCS, Ø1/2"-13 UNC X 1.75" G8	-	0.1 lb	18
4	633-006	WASHER, PLAIN 1/2"	-	0.1 lb	19
4	635-012	WASHER, LOCK 1/2"	-	0.1 lb	20
4	625-005	NUT, Ø1/2"-13 UNC G8	-	0.1 lb	21

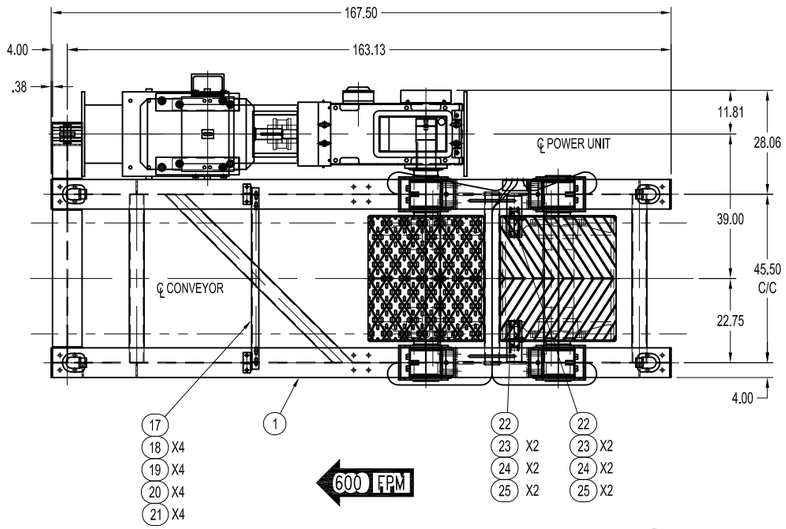

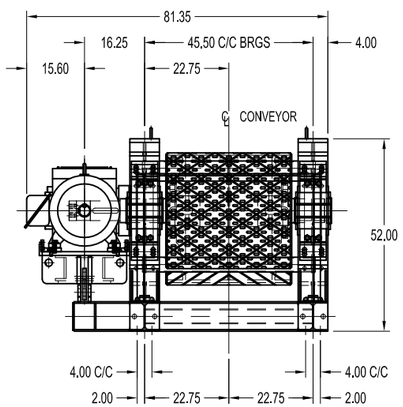

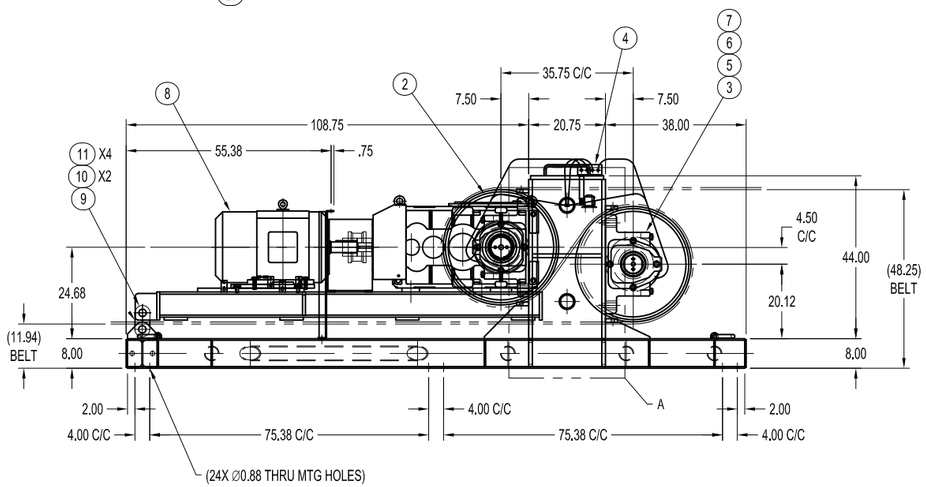

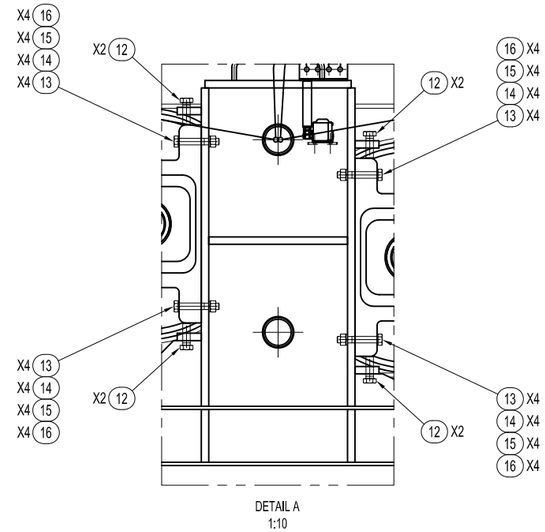

DETAIL A
1:10

REV	DESCRIPTION	REV'D BY / DATE	APP'D BY / DATE
2	UPDATED ITEM#8 UPDATED WEIGHT	JJC 8/21/2012	CHB
1	CHANGED DESCRIPTION	JWS 7/30/12	CHB 7/30/12

PROPRIETARY NOTICE
The information disclosed on this drawing is the property of The Robbins Company, and remains their sole property. It shall not be copied, used or disclosed to others for any purpose without prior written consent of The Robbins Company. Any such copies made must contain the same notice that appears on the original drawing. Possession of this drawing does not convey any rights to The Robbins Company or to others to make, use or sell equipment according to the drawing or any information on the drawing.

MACHINE	NEXT ASSY
S.F. SUBWAY	1049679

UNLESS NOTED ALL DIMS ARE Inch
TOLERANCES UNLESS NOTED
FRACTIONS ±1/16
.X ± .03
.XX ± .015
.XXX ± .005
ANGLES ± 1
SURFACE 125
DIMENSIONS IN ARE REFERENCE
ALL GEOMETRIC DIMENSIONING & TOLERANCING PER ANSI Y14.5-2009

TITLE: 30"BW RETURN BOOSTER ASSEMBLY- SINGLE 100HP

SIZE	DWG NO.	REV	SHT / OF	SCALE
D	1051260	2	1 / 1	1:20

DO NOT SCALE

DRAWN BY	CHECKED STANDARDS
J.CHANCEY	C.BESS
DATE 7/19/2012	CHECKED DESIGN C.BESS
WEIGHT TOTAL 12594.2 lb	APPROVED BY T.BESS
	DATE 7/24/2012

Robbins

www.TheRobbinsCompany.com

1051260

QTY	PART No.	DESCRIPTION	DWG No.	WT. Total	ITEM
32	633-009	WASHER, PLAIN 3/4"		1.6 lbm	27
32	635-015	WASHER, LOCK 3/4"		1.6 lbm	28
32	625-008	NUT, Ø3/4"-10 UNC G8		1.6 lbm	29
60	608-114	HHCS, Ø1/2"-13 UNCx4.5" G8		6.0 lbm	30
4	608-104	HHCS, Ø1/2"-13 UNCx1.75" G8		0.4 lbm	31
64	633-006	WASHER, PLAIN 1/2"		3.2 lbm	32
64	635-012	WASHER, LOCK 1/2"		3.2 lbm	33
64	625-005	NUT, Ø1/2"-13 UNC G8		3.2 lbm	34

QTY	PART No.	DESCRIPTION	DWG No.	WT. Total	ITEM
30	4000147	50 X 50 SIDERAIL, 3660 CENTERS	4000147	1344.0 lbm	19
26	81326	SIDERAIL CONNECTION PIN	81326	2.6 lbm	20
26	80504	HITCH PIN CLIP	80504	1.3 lbm	21
2	80559X1	M12 U-BOLT	80559-1	0.8 lbm	22
4	A22159-4	WASHER, LOCK M12		0.2 lbm	23
1 4	A22158-4	WASHER, PLAIN M12		0.2 lbm	24
4	A22154-45	NUT, M12 G8		0.2 lbm	25
32	608-178	HHCS, Ø3/4"-10 UNCx2.25" G8		3.2 lbm	26

QTY	PART No.	DESCRIPTION	DWG No.	WT. Total	ITEM
1	1051646	CARRYING BOOSTER STAND ASSEMBLY	1051646	1787.6 lbm	1
1	1052752	30"BW BOOSTER SIDERAIL SUPPORT STAND	1052752	28.3 lbm	2
1	1052607	30"BW SIDERAIL STAND 55.31" TALL	1052607	53.2 lbm	3
1	1052627	30"BW SIDERAIL STAND 44.88" TALL	1052627	49.8 lbm	4
1	1052630	30"BW SIDERAIL STAND 39.06" TALL	1052630	46.6 lbm	5
1	1052643	30"BW SIDERAIL STAND 31.94" TALL	1052643	42.8 lbm	6
1	1052651	30"BW SIDERAIL STAND 25.50" TALL	1052651	27.2 lbm	7
1	1052697	30"BW SIDERAIL STAND 19.69" TALL	1052697	24.1 lbm	8
1	1052703	30"BW SIDERAIL STAND 14.56" TALL	1052703	21.3 lbm	9
1	1052708	30"BW SIDERAIL STAND 10.13" TALL	1052708	18.9 lbm	10
1	1052711	30"BW SIDERAIL STAND 6.31" TALL	1052711	16.9 lbm	11
1	1052718	30"BW SIDERAIL STAND 22.56" TALL	1052718	25.6 lbm	12
1	1052722	30"BW SIDERAIL STAND 19.44" TALL	1052722	23.9 lbm	13
1	1052723	30"BW SIDERAIL STAND 12.06" TALL	1052723	20.0 lbm	14
2	4002196	3.19" TALL SIDERAIL SPACER	4002196	6.0 lbm	15
2	1052737	6.00" TALL SIDERAIL SPACER	1052737	8.2 lbm	16
2	1052744	1.56" TALL SIDERAIL SPACER	1052744	5.0 lbm	17
4	1052763	8.00" X 5.50" X 0.25" WELD-ON SPLICE PLATE	1052763	12.4 lbm	18

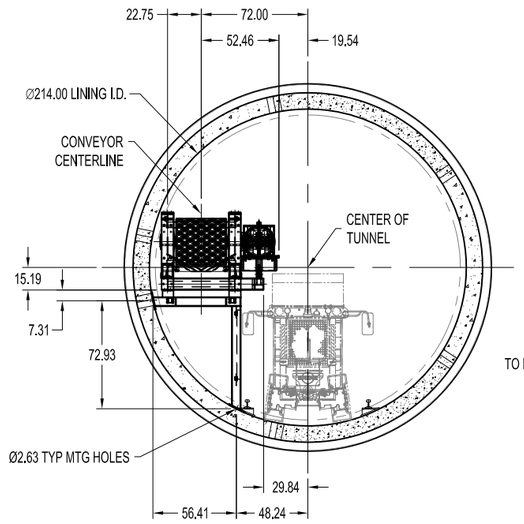

SECTION A-A
SCALE 1:50

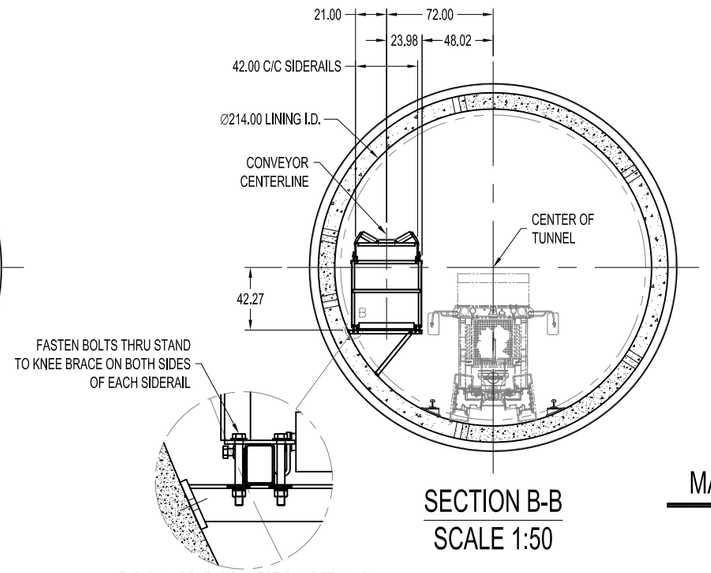

SECTION B-B
SCALE 1:50

TYPICAL BOLT CONNECTION DETAIL B
SCALE 1:10

MATERIAL FLOW

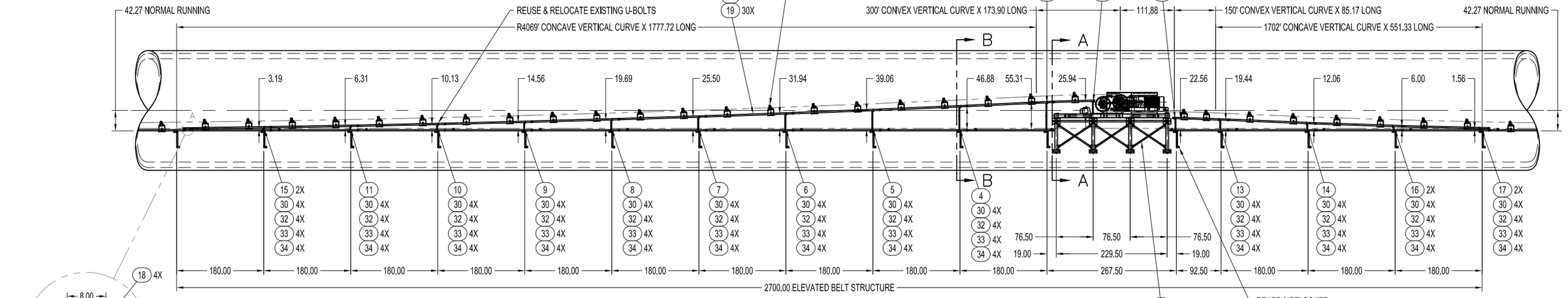

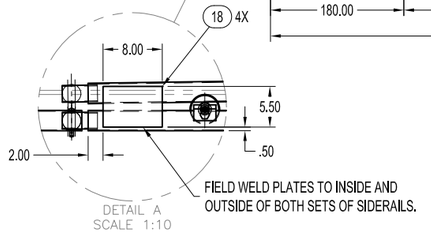

DETAIL A
SCALE 1:10

TRC P/N 1052438
NB CARRYING BOOSTER INSTALLATION KIT
SCALE 1:100

NOTES:

1. ALL WELDS ARE TO BE 1/4" CONTINUOUS FILLETS UNLESS NOTED OTHERWISE.
2. REMOVE ALL BURRS AND BREAK SHARP EDGES.
3. ALL WELDING SHALL MEET THE REQUIREMENTS OF THE LATEST EDITION OF THE AWS STRUCTURAL WELDING CODE - ALL SECTIONS AS APPLICABLE UNLESS OTHERWISE NOTED. USE E70XX LOW HYDROGEN ELECTRODES OR EQUIVALENT.
4. TORQUE ALL FASTENERS PER MANUFACTURER'S RECOMMENDATION.

REV	DESCRIPTION	CLL DATE	CHB APPD BY DATE
1	ITEM 24 P/N WAS A22156-4 (OBSOLETE).	9/24/12	9/24/12

PROPRIETARY NOTICE
The information disclosed herein is the property of The Robbins Company, and reveals trade secrets. It shall not be used, disclosed, reproduced, or copied in any other part without prior written consent of The Robbins Company. Any use or disclosure in addition to those in trust with the user, without any modification, is prohibited. The user, by its acceptance or use, agrees to hold in trust with the user, without any modification, and to the retained opportunities to The Robbins Company.

MACHINE	NEXT ASSY
S.F. SUBWAY	1049679

UNLESS NOTED ALL DIMS ARE inch
TOLERANCES UNLESS NOTED
FRACTIONS ±1/16
.X ± .03
.XX ± .015
.XXX ± .005
ANGLES ± 1
SURFACE FINISH 125
DIMENSIONS IN ARE REFERENCE
ALL GEOMETRIC DIMENSIONING & TOLERANCING PER ANSI Y14.5-2009
THIRD ANGLE PROJECTION
MACHINING BASIS

TITLE: NB CARRYING BOOSTER INSTALLATION KIT

SIZE	DWG No.	REV
D	1052438	1

SHT 1 OF 1 | SCALE 1:100 | DO NOT SCALE

DRAWN BY	CHECKED STANDARDS
C.LEGG	C.BESS
DATE 08/24/2012	CHECKED DESIGN C.BESS
WEIGHT TOTAL 3591.1 lbm	APPROVED BY T.BESS
	DATE 09/13/2012

Robbins

www.TheRobbinsCompany.com

1052438

NOTES:

1. USE EXISTING SIDERAILS & U-BOLTS FOR ASSEMBLY OF THE TYPICAL BELT STRUCTURE TO THE STANDS.
2. USE RETURN ROLLS & RETURN ROLL BRACKETS SUPPLIED WITH THE TYPICAL BELT STRUCTURE ON ITEMS 2, 3, 4, & 5.
3. TORQUE ALL FASTENERS PER MANUFACTURER'S RECOMMENDATION.

QTY	PART No.	DESCRIPTION	DWG No.	WT. Total	ITEM
24	608-178	HHCS, Ø3/4"-10 UNCx2.25" G8		2.4 LBS	22
24	633-009	WASHER, PLAIN 3/4"		2.4 LBS	23
24	635-015	WASHER, LOCK 3/4"		2.4 LBS	24
24	625-008	NUT, Ø3/4"-10 UNC G8		2.4 LBS	25
80	608-103	HHCS, Ø1/2"-13 UNCx1.5" G8		8.0 LBS	26
80	633-006	WASHER, PLAIN 1/2"		8.0 LBS	27
80	635-012	WASHER, LOCK 1/2"		8.0 LBS	28
80	625-005	NUT, Ø1/2"-13 UNC G8		8.0 LBS	29

QTY	PART No.	DESCRIPTION	DWG No.	WT. Total	ITEM
1	1051791	RETURN BOOSTER STAND ASSEMBLY	1051791	1100.1 LBS	1
1	1052764	30"BW SIDERAIL STAND 69.25" TALL	1052794	68.1 LBS	2
1	1052769	30"BW SIDERAIL STAND 63.5" TALL	1052769	65.0 LBS	3
1	1052793	30"BW SIDERAIL STAND 51.88" TALL	1052793	58.8 LBS	4
1	1052798	30"BW SIDERAIL STAND 40.19" TALL	1052798	52.5 LBS	5
1	1052807	30"BW SIDERAIL STAND 29.88" TALL	1052807	29.5 LBS	6
1	1052809	30"BW SIDERAIL STAND 21.19" TALL	1052809	24.9 LBS	7
1	1052818	30"BW SIDERAIL STAND 14" TALL	1052818	21.0 LBS	8
1	1052822	30"BW SIDERAIL STAND 8.25" TALL	1052822	17.9 LBS	9
2	1052844	4.06" TALL SIDERAIL SPACER	1052844	6.6 LBS	10
2	1052852	1.31" TALL SIDERAIL SPACER	1052852	4.6 LBS	11
1	1052805	30"BW SIDERAIL STAND 69.56" TALL	1052805	63.0 LBS	12
1	1052856	30"BW SIDERAIL STAND 65.13" TALL	1052856	60.6 LBS	13
1	1052861	30"BW SIDERAIL STAND 55" TALL	1052861	55.2 LBS	14
1	1052863	30"BW SIDERAIL STAND 43.06" TALL	1052863	48.8 LBS	15
1	1052816	30"BW SIDERAIL STAND 32.44" TALL	1052816	30.9 LBS	16
1	1052821	30"BW SIDERAIL STAND 23.25" TALL	1052821	26.0 LBS	17
1	1052867	30"BW SIDERAIL STAND 15.69" TALL	1052867	21.9 LBS	18
1	1052872	30"BW SIDERAIL STAND 9.63" TALL	1052872	18.7 LBS	19
2	1052871	5" TALL SIDERAIL SPACER	1052871	7.4 LBS	20
2	1052881	1.88" TALL SIDERAIL SPACER	1052881	5.0 LBS	21

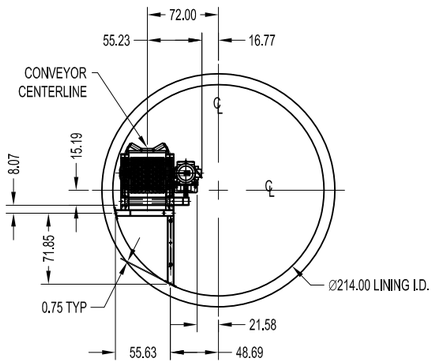

SECTION A-A
1:75

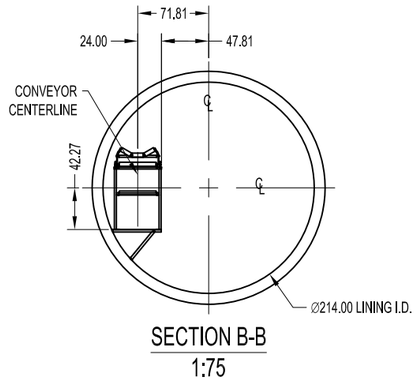

SECTION B-B
1:75

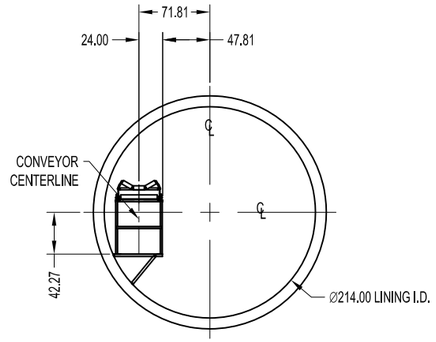

SECTION C-C
1:75

MATERIAL FLOW

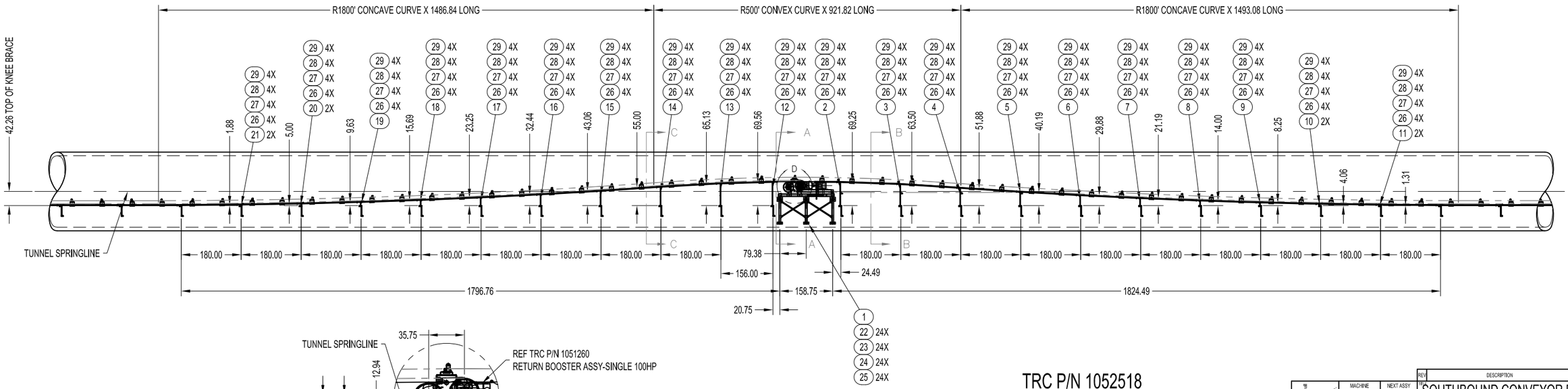

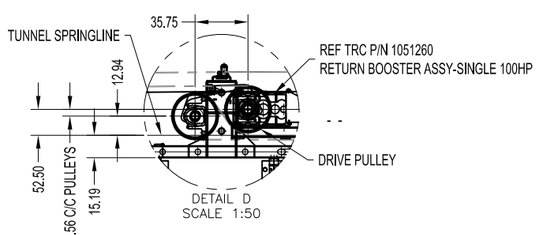

TRC P/N 1052518
SOUTHBOUND CONVEYOR
RETURN BOOSTER STRUCTURE KIT
1:150

PROPRIETARY NOTICE
The information disclosed herein is the property of The Robbins Company, and reveals trade secrets of The Robbins Company. It is not to be used for any other party without prior written consent of The Robbins Company. Any party to whom this information is disclosed agrees to hold with title notice, without any modification and to be returned upon request to The Robbins Company.

MACHINE	NEXT ASSY
S.F. SUBWAY	1049679

UNLESS NOTED ALL DIMS ARE inch
TOLERANCES UNLESS NOTED
FRACTIONS ±1/16
.X ± .03
.XX ± .015
.XXX ± .005
ANGLES ± 1°
SURFACE 250
FINISH
DIMENSIONS (X) ARE REFERENCE
ALL GEOMETRIC DIMENSIONING & TOLERANCING PER ANSI Y14.5-2009

REV	DESCRIPTION	REV'D BY/ DATE	APP'D BY/ DATE

TITLE: SOUTHBOUND CONVEYOR RETURN BOOSTER STRUCTURE KIT

SIZE	DWG No.	REV.	SHT	OF	SCALE
D	1052518	0	1	1	1:150

DO NOT SCALE

DRAWN BY: N.EISENBERG DATE: 8/24/2012
CHECKED DETAILER: C.BESS
CHECKED DESIGN: C.BESS
WEIGHT TOTAL: 1828.1 LBS
APPROVED BY: T.BESS DATE: 09/14/2012

Robbins

www.TheRobbinsCompany.com

1052518

QTY	PART No.	DESCRIPTION	DWG No.	WT. Total	ITEM
32	633-009	WASHER, PLAIN 3/4"		1.6 lbm	27
32	635-015	WASHER, LOCK 3/4"		1.6 lbm	28
32	625-008	NUT, Ø3/4"-10 UNC G8		1.6 lbm	29
60	608-114	HHCS, Ø1/2"-13 UNCx4.5" G8		6.0 lbm	30
4	608-104	HHCS, Ø1/2"-13 UNCx1.75" G8		0.4 lbm	31
64	633-006	WASHER, PLAIN 1/2"		3.2 lbm	32
64	635-012	WASHER, LOCK 1/2"		3.2 lbm	33
64	625-005	NUT, Ø1/2"-13 UNC G8		3.2 lbm	34

QTY	PART No.	DESCRIPTION	DWG No.	WT. Total	ITEM
30	4000147	50 X 50 SIDERAIL, 3660 CENTERS	4000147	1344.0 lbm	19
26	81326	SIDERAIL CONNECTION PIN	81326	2.6 lbm	20
26	80504	HITCH PIN CLIP	80504	1.3 lbm	21
2	80559X1	M12 U-BOLT	80559-1	0.8 lbm	22
4	A22159-4	WASHER, LOCK M12		0.2 lbm	23
4	A22158-4	WASHER, PLAIN M12		0.2 lbm	24
4	A22154-45	NUT, M12 G8		0.2 lbm	25
32	608-178	HHCS, Ø3/4"-10 UNCx2.25" G8		3.2 lbm	26

QTY	PART No.	DESCRIPTION	DWG No.	WT. Total	ITEM
1	1051646	CARRYING BOOSTER STAND ASSEMBLY	1051646	1787.6 lbm	1
1	1052752	30"BW BOOSTER SIDERAIL SUPPORT STAND	1052752	28.3 lbm	2
1	1052607	30"BW SIDERAIL STAND 55.31" TALL	1052607	53.2 lbm	3
1	1052627	30"BW SIDERAIL STAND 44.88" TALL	1052627	49.8 lbm	4
1	1052630	30"BW SIDERAIL STAND 39.06" TALL	1052630	46.6 lbm	5
1	1052643	30"BW SIDERAIL STAND 31.94" TALL	1052643	42.8 lbm	6
1	1052651	30"BW SIDERAIL STAND 25.50" TALL	1052651	27.2 lbm	7
1	1052697	30"BW SIDERAIL STAND 19.69" TALL	1052697	24.1 lbm	8
1	1052703	30"BW SIDERAIL STAND 14.56" TALL	1052703	21.3 lbm	9
1	1052708	30"BW SIDERAIL STAND 10.13" TALL	1052708	18.9 lbm	10
1	1052711	30"BW SIDERAIL STAND 6.31" TALL	1052711	16.9 lbm	11
1	1052718	30"BW SIDERAIL STAND 22.56" TALL	1052718	25.6 lbm	12
1	1052722	30"BW SIDERAIL STAND 19.44" TALL	1052722	23.9 lbm	13
1	1052723	30"BW SIDERAIL STAND 12.06" TALL	1052723	20.0 lbm	14
2	4002196	3.19" TALL SIDERAIL SPACER	4002196	6.0 lbm	15
2	1052737	6.00" TALL SIDERAIL SPACER	1052737	8.2 lbm	16
2	1052744	1.56" TALL SIDERAIL SPACER	1052744	5.0 lbm	17
4	1052763	8.00" X 5.50" X 0.25" WELD-ON SPLICE PLATE	1052763	12.4 lbm	18

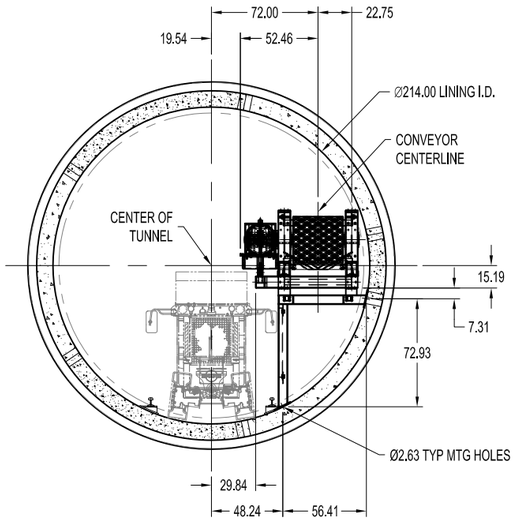

SECTION A-A
SCALE 1:50

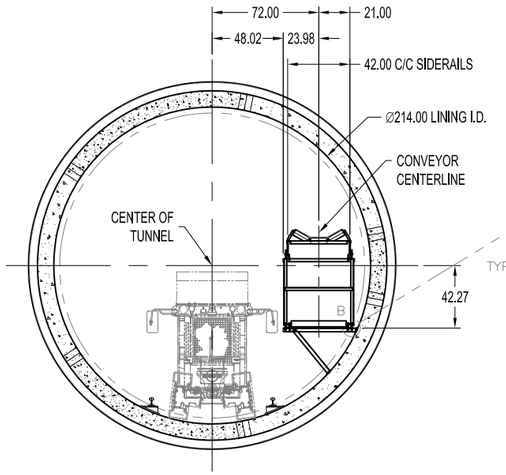

SECTION B-B
SCALE 1:50

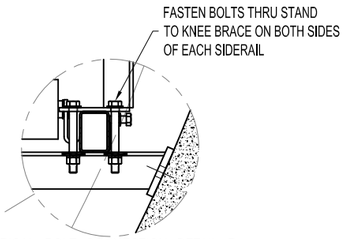

TYPICAL BOLT CONNECTION DETAIL B
SCALE 1:10

MATERIAL FLOW

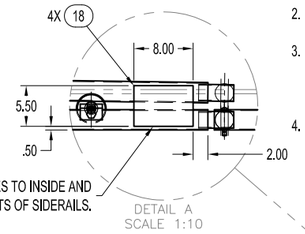

DETAIL A
SCALE 1:10

NOTES:

1. ALL WELDS ARE TO BE 1/4" CONTINUOUS FILLETS UNLESS NOTED OTHERWISE.
2. REMOVE ALL BURRS AND BREAK SHARP EDGES.
3. ALL WELDING SHALL MEET THE REQUIREMENTS OF THE LATEST EDITION OF THE AWS STRUCTURAL WELDING CODE - ALL SECTIONS AS APPLICABLE UNLESS OTHERWISE NOTED. USE E70XX LOW HYDROGEN ELECTRODES OR EQUIVALENT.
4. TORQUE ALL FASTENERS PER MANUFACTURER'S RECOMMENDATION.

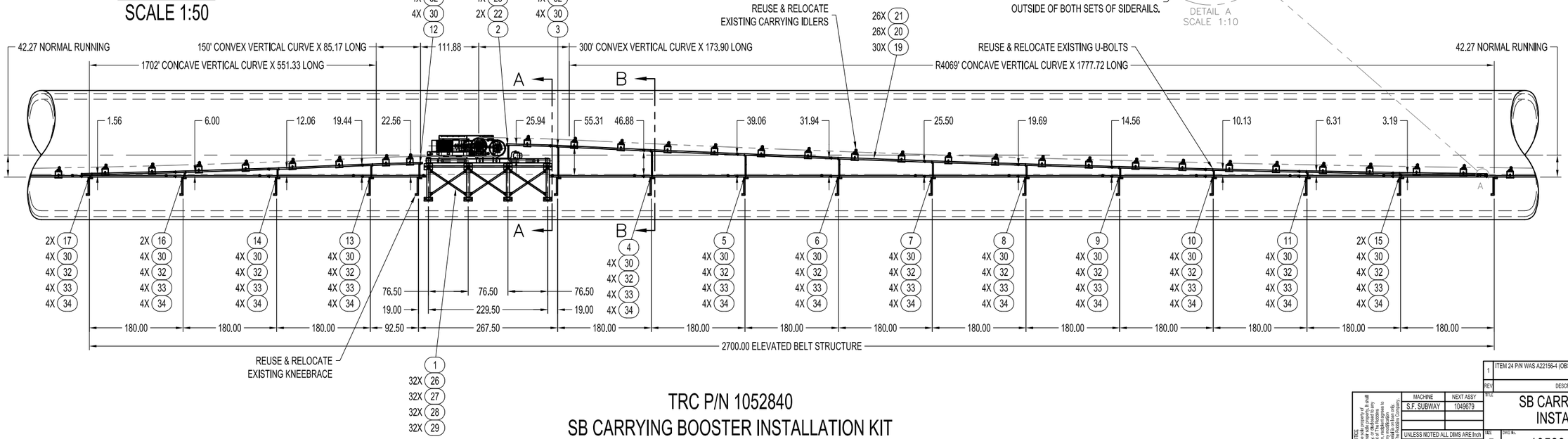

TRC P/N 1052840
SB CARRYING BOOSTER INSTALLATION KIT
SCALE 1:100

REV	DESCRIPTION	CLL DATE	CHB APPD BY/ DATE
1	ITEM 24 P/N WAS A22156-4 (OBSOLETE).	9/24/12	9/24/12

PROPRIETARY NOTICE
This information disclosed herein is the property of The Robbins Company, and remains their sole property. It shall not be copied, used, or disclosed to others for any purpose without prior written consent of The Robbins Company. Any such copies or reproductions shall also become the property of The Robbins Company and the recipient agrees to return them upon demand. Failure to comply may be subject to civil action. Any disclosure, loan, copy, or delivery of this drawing, or the information shown hereon, is to be returned upon request to The Robbins Company.

MACHINE	NEXT ASSY
S.F. SUBWAY	1049679

UNLESS NOTED ALL DIMS ARE Inch
TOLERANCES UNLESS NOTED
FRACTIONS ±1/16
MACHINED SURFACES .X ±.03 .XX ±.015 .XXX ±.005
ANGLES ±1°
FINISH 125
THIRD ANGLE PROJECTION
DIMENSIONS IN [ ] ARE REFERENCE
ALL GEOMETRIC DIMENSIONING & TOLERANCING PER ANSI Y14.5-2009

TITLE: SB CARRYING BOOSTER INSTALLATION KIT

SIZE: D | DWG No.: 1052840 | REV: 1 | SHT 1 OF 1 | SCALE: 1:100 DO NOT SCALE

DRAWN BY: C.LEGG DATE: 08/24/2012
CHECKED ENG/MFG: C.BESS
CHECKED DESIGN: C.BESS
APPROVED BY: T.BESS DATE: 09/13/2012
WEIGHT TOTAL: 3591.1 lbm

Robbins

www.TheRobbinsCompany.com

1052840

NOTES:

1. USE EXISTING SIDERAILS & U-BOLTS FOR ASSEMBLY OF THE TYPICAL BELT STRUCTURE TO THE STANDS.
2. USE RETURN ROLLS & RETURN ROLL BRACKETS SUPPLIED WITH THE TYPICAL BELT STRUCTURE ON ITEMS 2, 3, 4, & 5.
3. TORQUE ALL FASTENERS PER MANUFACTURER'S RECOMMENDATION.

QTY	PART No.	DESCRIPTION	DWG No.	WT. Total	ITEM
24	608-178	HHCS, Ø3/4"-10 UNCx2.25" G8		2.4 LBS	22
24	633-009	WASHER, PLAIN 3/4"		2.4 LBS	23
24	635-015	WASHER, LOCK 3/4"		2.4 LBS	24
24	625-008	NUT, Ø3/4"-10 UNC G8		2.4 LBS	25
80	608-103	HHCS, Ø1/2"-13 UNCx1.5" G8		8.0 LBS	26
80	633-006	WASHER, PLAIN 1/2"		8.0 LBS	27
80	635-012	WASHER, LOCK 1/2"		8.0 LBS	28
80	625-005	NUT, Ø1/2"-13 UNC G8		8.0 LBS	29

QTY	PART No.	DESCRIPTION	DWG No.	WT. Total	ITEM
1	1051791	RETURN BOOSTER STAND ASSEMBLY	1051791	1100.1 LBS	1
1	1052764	30"BW SIDERAIL STAND 69.25" TALL	1052794	68.1 LBS	2
1	1052769	30"BW SIDERAIL STAND 63.5" TALL	1052769	65.0 LBS	3
1	1052793	30"BW SIDERAIL STAND 51.88" TALL	1052793	58.8 LBS	4
1	1052798	30"BW SIDERAIL STAND 40.19" TALL	1052798	52.5 LBS	5
1	1052807	30"BW SIDERAIL STAND 29.88" TALL	1052807	29.5 LBS	6
1	1052809	30"BW SIDERAIL STAND 21.19" TALL	1052809	24.9 LBS	7
1	1052818	30"BW SIDERAIL STAND 14" TALL	1052818	21.0 LBS	8
1	1052822	30"BW SIDERAIL STAND 8.25" TALL	1052822	17.9 LBS	9
2	1052844	4.06" TALL SIDERAIL SPACER	1052844	6.6 LBS	10
2	1052852	1.31" TALL SIDERAIL SPACER	1052852	4.6 LBS	11
1	1052805	30"BW SIDERAIL STAND 69.56" TALL	1052805	63.0 LBS	12
1	1052856	30"BW SIDERAIL STAND 65.13" TALL	1052856	60.6 LBS	13
1	1052861	30"BW SIDERAIL STAND 55" TALL	1052861	55.2 LBS	14
1	1052863	30"BW SIDERAIL STAND 43.06" TALL	1052863	48.8 LBS	15
1	1052816	30"BW SIDERAIL STAND 32.44" TALL	1052816	30.9 LBS	16
1	1052821	30"BW SIDERAIL STAND 23.25" TALL	1052821	26.0 LBS	17
1	1052867	30"BW SIDERAIL STAND 15.69" TALL	1052867	21.9 LBS	18
1	1052872	30"BW SIDERAIL STAND 9.63" TALL	1052872	18.7 LBS	19
2	1052871	5" TALL SIDERAIL SPACER	1052871	7.4 LBS	20
2	1052881	1.88" TALL SIDERAIL SPACER	1052881	5.0 LBS	21

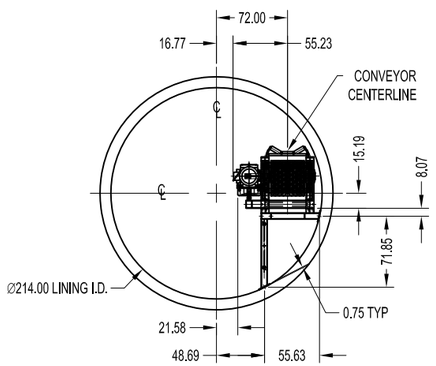

SECTION A-A
1:75

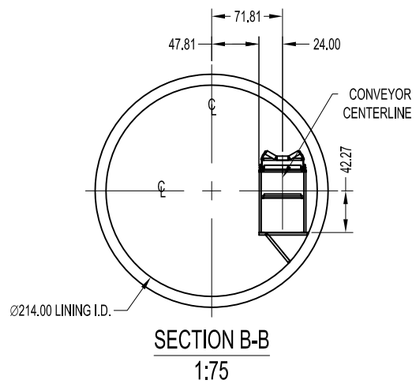

SECTION B-B
1:75

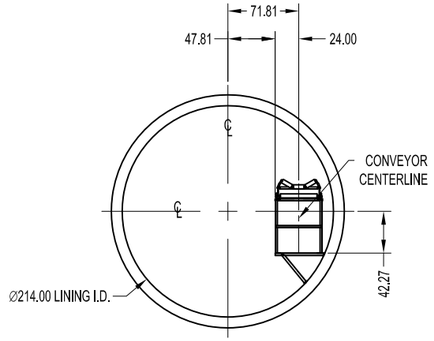

SECTION C-C
1:75

MATERIAL FLOW

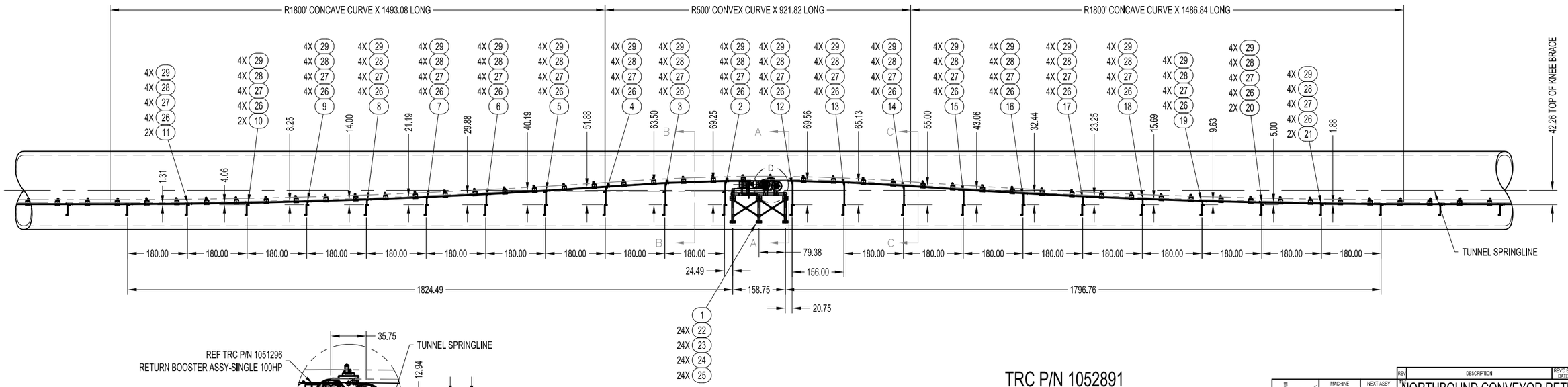

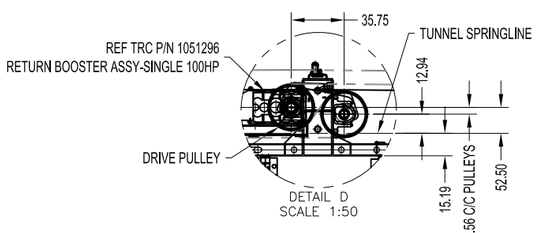

DETAIL D
SCALE 1:50

TRC P/N 1052891
NORTHBOUND CONVEYOR
RETURN BOOSTER STRUCTURE KIT
1:150

PROPRIETARY NOTICE
The information disclosed herein is the property of The Robbins Company, and reveals trade secrets and proprietary know-how that are not to be disclosed to others and may not be used in any way, in whole or in part, without the express written consent of The Robbins Company. If consent is given for reproduction in connection with the publication of this drawing, or any other purpose, the following notice must appear on all such reproductions: "Reproduced by permission of The Robbins Company." This notice is to be construed to protect all rights of The Robbins Company.

REV	DESCRIPTION	REV'D BY/ DATE	APP'D BY/ DATE

MACHINE	S.F. SUBWAY
NEXT ASSY	1049679
UNLESS NOTED ALL DIMS ARE inch	
TOLERANCES UNLESS NOTED	
FRACTIONS	±1/16
X	± .03
.XX	± .015
.XXX	± .005
ANGLES	± 1°
SURFACE FINISH	125
DIMENSIONS (X) ARE REFERENCE	
ALL GEOMETRIC DIMENSIONING & TOLERANCING PER ANSI Y14.5-2009	

NORTHBOUND CONVEYOR RETURN BOOSTER STRUCTURE KIT

SIZE	DWG No.	REV.	SHT	OF	SCALE
D	1052891	0	1	1	1:150

DO NOT SCALE

DRAWN BY	N.EISENBERG
DATE	8/30/2012
CHECKED BY/DATE	C.BESS
CHECKED DESIGN	C.BESS
WEIGHT TOTAL	1828.1 LBS
APPROVED BY	T.BESS
DATE	09/14/2012

Robbins

www.TheRobbinsCompany.com

1052891

QTY	PART No.	DESCRIPTION	DWG No.	WT. Total	ITEM
116	A22151-40505	M12 X 50mm LONG G8	-	0.1 lb	45

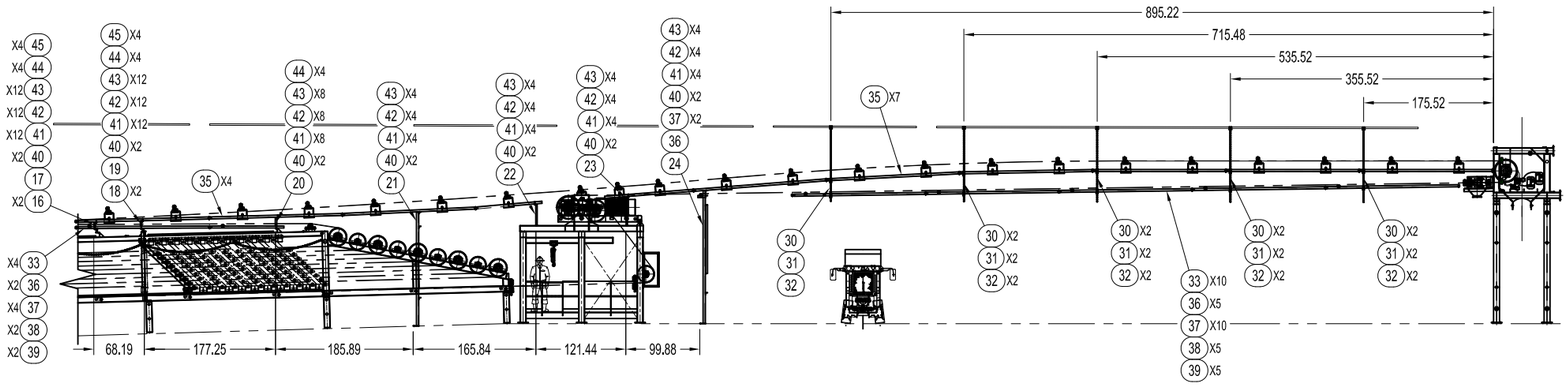

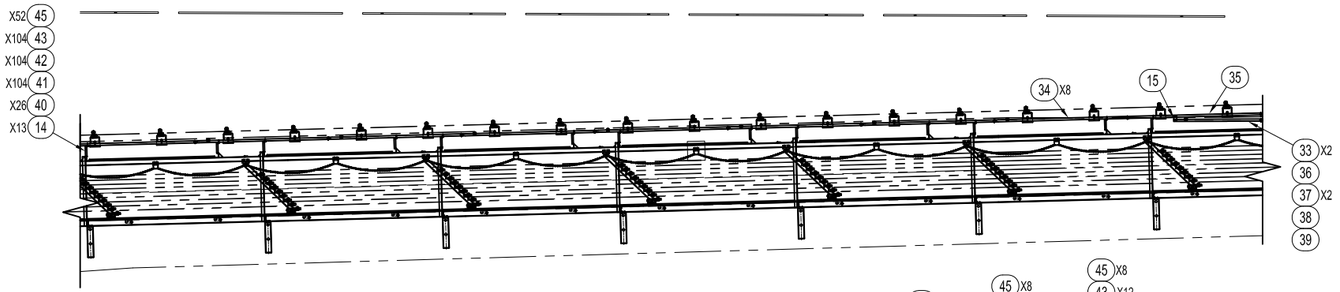

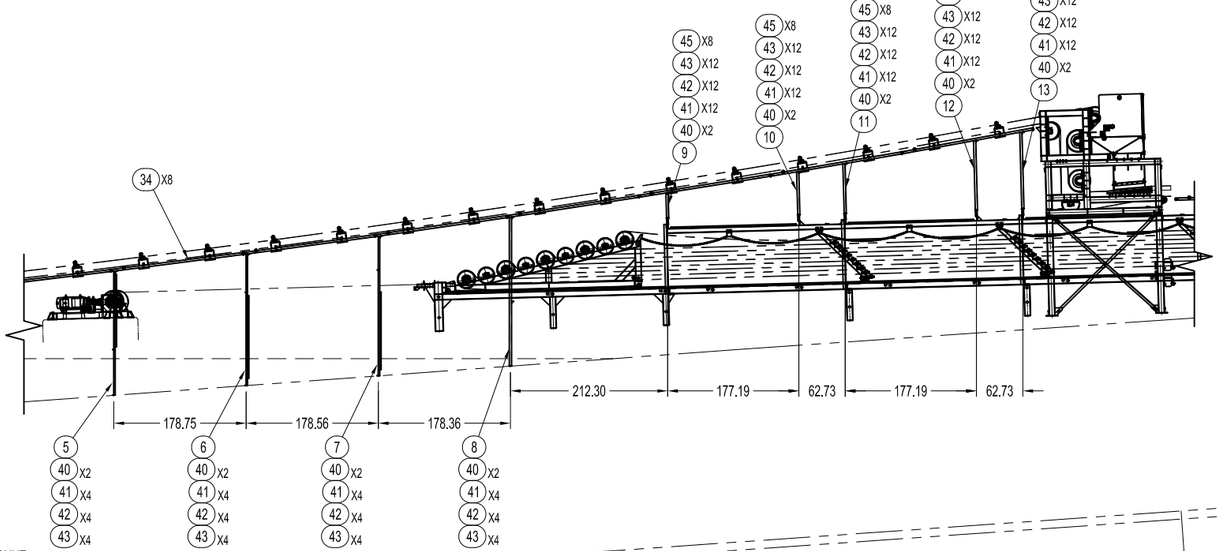

SIDERAIL STANDS MOUNT TO KNEE BRACE ASSEMBLY

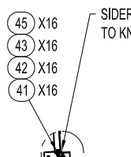

DETAIL A
SCALE 1:25

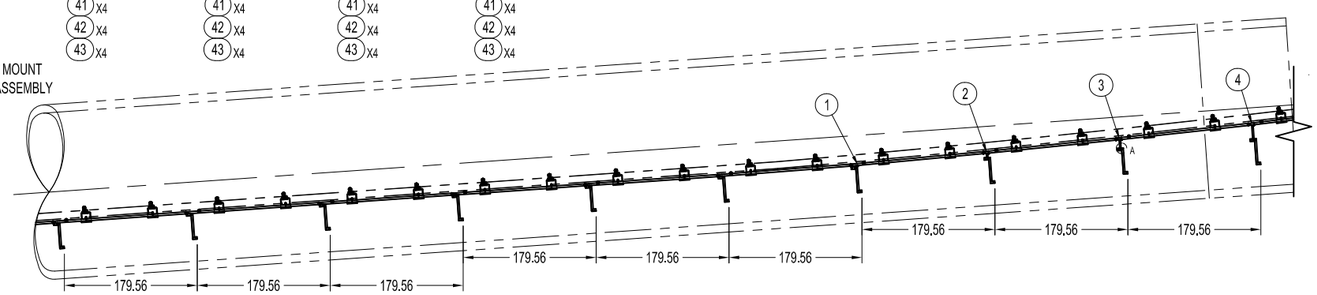

QTY	PART No.	DESCRIPTION	DWG No.	WT. Total	ITEM
2	1050469	1.50" TALL SIDERAIL SPACER	1050469	1.0 lb	1
1	1050466	5.94" SIDERAIL SUPPORT STAND	1050466	18.4 lb	2
1	1050464	11.69" SIDERAIL SUPPORT STAND	1050464	21.5 lb	3
1	1050455	19.00" SIDERAIL SUPPORT STAND	1050455	25.4 lb	4
1	1050866	30"BW SIDERAIL STAND 167.75" TALL	1050866	174.1 lb	5
1	1050892	30"BW SIDERAIL STAND 177.63" TALL	1050892	190.3 lb	6
1	1050531	30"BW SIDERAIL STAND 188.75" TALL	1050531	198.1 lb	7
1	1050497	30"BW SIDERAIL STAND 201.31" TALL	1050497	201.5 lb	8
1	1050453	34.63" SIDERAIL SUPPORT STAND	1050453	33.7 lb	9
1	1050450	58.50" SIDERAIL SUPPORT STAND	1050450	41.0 lb	10
1	1050441	67.63" SIDERAIL SUPPORT STAND	1050441	51.2 lb	11
1	1050438	94.25" SIDERAIL SUPPORT STAND	1050438	65.3 lb	12
1	1050435	104.00" SIDERAIL SUPPORT STAND	1050435	70.5 lb	13
13	1051608	14.50" SIDERAIL SUPPORT STANDS	1051608	22.1 lb	14
2	1050075	SIDERAIL SUPPORT PLATE	1050075	5.0 lb	15
2	1051611	5.63" TALL SIDERAIL SPACER	1051611	7.1 lb	16
1	1050046	6.06" SIDERAIL SUPPORT STAND	1050046	17.9 lb	17
2	1051612	4.25" TALL SIDERAIL SPACER	1051612	6.5 lb	18
1	1051610	7.44" SIDERAIL SUPPORT STAND	1051610	18.4 lb	19
1	1051609	11.81" SIDERAIL SUPPORT STAND	1051609	20.7 lb	20
1	1051005	30"BW SIDERAIL STAND 154.13" TALL ASSEMBLY	1051005	318.9 lb	21
1	1051032	29.25" SIDERAIL SUPPORT STAND	1051032	30.4 lb	22
1	1051039	39.38" SIDERAIL SUPPORT STAND	1051039	35.7 lb	23
1	1051055	30"BW SIDERAIL STAND 180.00" TALL	1051055	328.7 lb	24
1	1050976	SIDERAIL SPACER 29.59" OFFSET	1050976	78.1 lb	25
1	1051054	SIDERAIL SPACER 19.80" OFFSET	1051054	68.8 lb	26
1	1051071	SIDERAIL SPACER 16.33" OFFSET	1051071	65.4 lb	27
1	1051085	SIDERAIL SPACER 6.55" OFFSET	1051085	56.1 lb	28
1	1051089	SIDERAIL SPACER 3.09" OFFSET	1051089	50.7 lb	29
10	B85778-10104	1/4" GRADE 80 ALLOY CHAIN, 104" LONG	B85778	374.4 lb	30
10	B83801-1	1/4" ROOF PLATE	B83801	30.0 lb	31
10	1046674	30"BW DOUBLE CHAIN SIDERAIL SUPPORT	1046678	341.8 lb	32
16	81076	15' SIDERAIL LINK	81076	864.0 lb	33
16	1046678	30"BW TYPICAL STRUCTURE ASSEMBLY	1046678	4424.0 lb	34
12	1050025	30"BW TYPICAL STRUCTURE ASSEMBLY W/O RETURN ROLL	1050025	2908.8 lb	35
9	D81747-2	30"BW CEMA-C RETURN ROLL	D81747	274.5 lb	36
18	81080	RETURN ROLL BRACKET	81080	64.8 lb	37
8	80505	JOINT PIN	80505	1.6 lb	38
8	80504	HITCH PIN CLIP	80504	1.6 lb	39
58	81082X10	12mm U-BOLT FOR 50X70 SIDERAIL	81082	0.1 lb	40
244	A22158-4	WASHER HD NW OD M12	-	0.1 lb	41
244	A22159-4	WASHER, LOCK M12	-	0.1 lb	42
244	A22154-45	NUT M12 G8	-	0.1 lb	43
12	A22151-41205	M12 X 120mm LONG G8	-	0.1 lb	44

REV.	DESCRIPTION	REV'D BY/ DATE	APP'D BY/ DATE
2	UPDATED ITEMS #32, 44 & 45	JJC 10/16/12	CHB 10/16/12
1	UPDATED ITEM 34	A. LEMIS 10/9/12	C. BESS 10/9/12

PROPRIETARY NOTICE
This information is the property of The Robbins Company, and shall not be used, copied, or reproduced in whole or in part without prior written consent of The Robbins Company, and shall be returned upon request. Our customers and suppliers are to hold this data, without any modification, in strict confidence and shall not release it to any other party without prior written permission, and is to be returned upon request to The Robbins Company.

MACHINE	NEXT ASSY
S.F. SUBWAY	1049879

UNLESS NOTED ALL DIMS ARE Inch

TOLERANCES UNLESS NOTED

FABRICATED		MACHINED	
0 - 1'	± 1/8	FRACTIONS	1/16
1' - 5'	± 1/8	.X	± .03
5' - 20'	± 1/4	.XX	± .015
20' +	± 1/2	.XXX	± .005
		ANGLES	± 1°
		SURFACE	125

MILLIMETER CONVERSION
DIMENSIONS (X) ARE REFERENCE
ALL GEOMETRIC DIMENSIONING & TOLERANCING PER ANSI Y14.5-2009

S.F. SUBWAY NORTH BOUND CHAMBER STRUCTURE

SIZE	DWG No.	REV	SHT	SCALE
D	1050905	2	1 of 1	1:100 DO NOT SCALE

DRAWN BY	CHECKED STANDARDS
J.CHANCEY	C.BESS
DATE	CHECKED DESIGN
7/10/2012	C.BESS
WEIGHT TOTAL	APPROVED BY
11508.6 lb	T.BESS
	DATE 9/13/2012

Robbins

www.TheRobbinsCompany.com

1050905

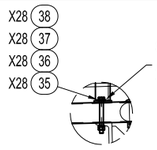

DETAIL A
SCALE 1:10

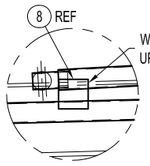

DETAIL B
SCALE 1:10

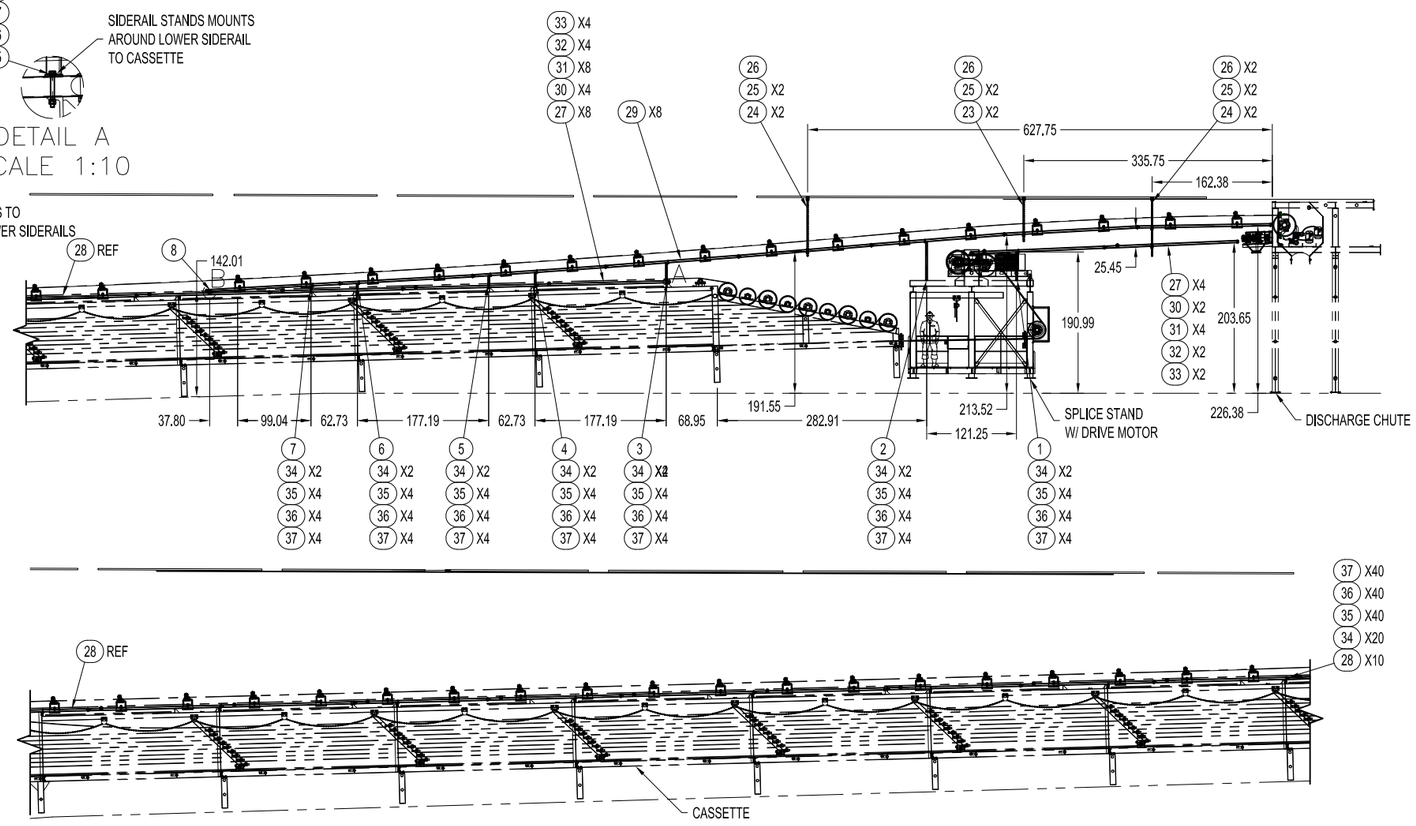

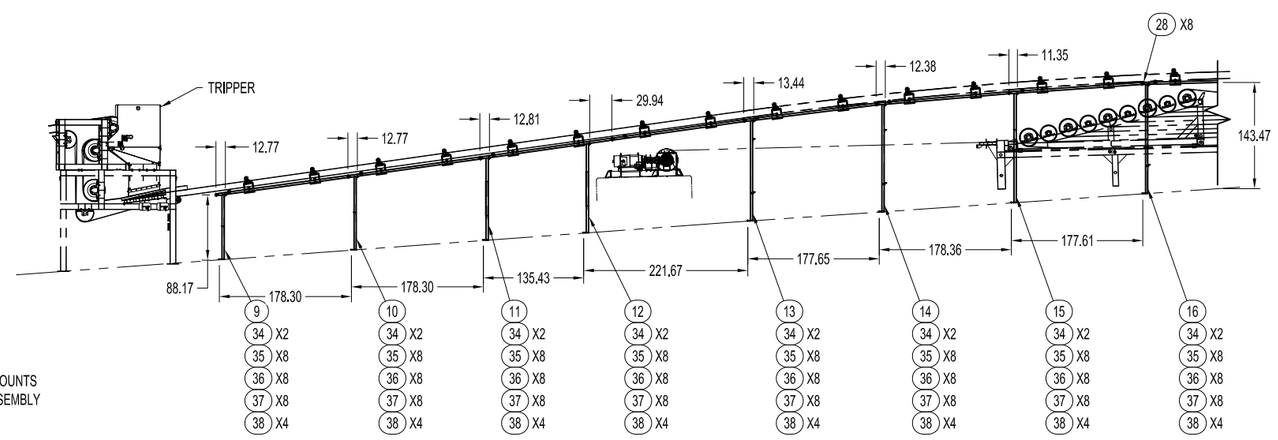

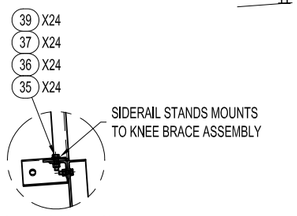

DETAIL C
SCALE 1:10

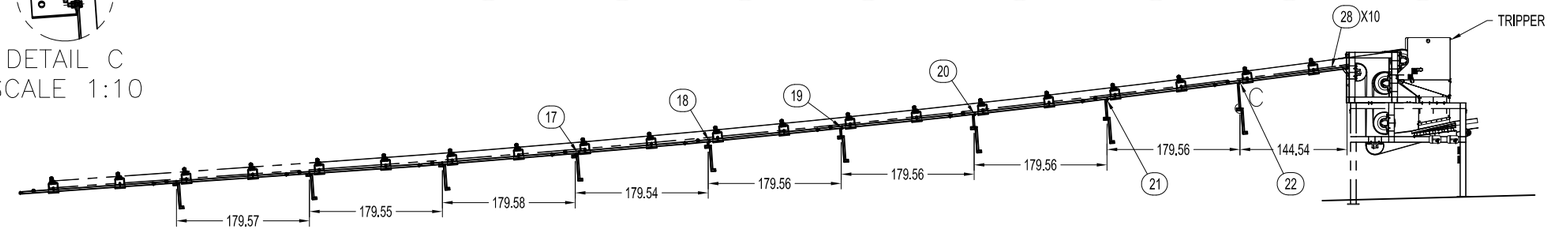

QTY	PART No.	DESCRIPTION	DWG No.	WT. Total	ITEM
1	1050039	38.44" SIDERAIL SUPPORT STAND	1050039	35.4 lbs	1
1	1050042	52.13" SIDERAIL SUPPORT STAND	1050042	42.9 lbs	2
1	1050043	24.25" SIDERAIL SUPPORT STAND	1050043	27.7 lbs	3
1	1050044	15.94" SIDERAIL SUPPORT STAND	1050044	23.2 lbs	4
1	1050045	13.19" SIDERAIL SUPPORT STAND	1050045	21.7 lbs	5
1	1051610	7.44" SIDERAIL SUPPORT STAND	1051610	18.4 lbs	6
1	1050047	5.50" SIDERAIL SUPPORT STAND	1050047	17.9 lbs	7
2	1050075	SIDERAIL SUPPORT PLATE	1050075	6.8 lbs	8
1	1050036	30" BW SIDERAIL STAND 87.50" TALL	1050036	165.6 lbs	9
1	1050051	30" BW SIDERAIL STAND 99.13" TALL	1050051	179.5 lbs	10
1	1050053	30" BW SIDERAIL STAND 111.13" TALL	1050053	204.9 lbs	11
1	1050058	30" BW SIDERAIL STAND 120.50" TALL	1050058	216.1 lbs	12
1	1050065	30" BW SIDERAIL STAND 135.44" TALL ASSEMBLY	1050065	252.9 lbs	13
1	1050074	30" BW SIDERAIL STAND 144.94" TALL ASSEMBLY	1050074	264.3 lbs	14
1	1050078	30" BW SIDERAIL STAND 147.69" TALL	1050078	263.0 lbs	15
1	1050081	30" BW SIDERAIL STAND 147.50" TALL ASSEMBLY	1050081	265.0 lbs	16
2	1050320	2.4375" TALL SIDERAIL SPACER	1050320	2.4 lbs	17
1	1050313	30" BW SIDERAIL STAND 5.3750" TALL	1050313	18.4 lbs	18
1	1050311	30" BW SIDERAIL STAND 10.9062" TALL	1050311	21.4 lbs	19
1	1050308	30" BW SIDERAIL STAND 16.8750" TALL	1050308	24.3 lbs	20
1	1050290	30" BW SIDERAIL STAND 25.00" TALL	1050290	28.4 lbs	21
1	1050267	30" BW SIDERAIL STAND 34.6875" TALL	1050267	33.9 lbs	22
2	B85778-10065	1/4" GRADE 80 ALLOY CHAIN, 65" LONG	B85778	46.8 lbs	23
4	B85778-10082	1/4" GRADE 80 ALLOY CHAIN, 82" LONG	B85778	118.0 lbs	24
6	B83801-1	1/4" ROOF PLATE	B83801	18.0 lbs	25
4	1046674	30" BW DOUBLE CHAIN SIDERAIL SUPPORT	1046674	136.7 lbs	26
12	81076	15' SIDERAIL LINK	81076	648.0 lbs	27
28	1046678	30"BW TYPICAL STRUCTURE ASSEMBLY	1046678	7742.0 lbs	28
8	1050025	30"BW TYPICAL STRUCTURE ASSEMBLY W/O RETURN ROLL	1050025	1939.2 lbs	29
6	D81747-2	30" CEMA-C RETURN ROLL	D81747-2	183.0 lbs	30
12	81080	RETURN ROLL BRACKET	81080	43.2 lbs	31
6	80505	JOINT PIN	80505	1.2 lbs	32
6	80504	HITCH PIN CLIP	80504	1.2 lbs	33
50	81082X10	12MM U-BOLT FOR 50 X 70 SIDERAIL		0.1 lbs	34
184	A22158-4	WASHER HD NW OD M12		0.1 lbs	35
184	A22159-4	WASHER, LOCK M12		0.1 lbs	36
184	A22154-45	NUT M12 G8		0.1 lbs	37
60	A22151-41205	M12 X 120MM LG G8		0.1 lbs	38
24	A22151-40505	M12 X 50MM LG G8		0.1 lbs	39

1 UPDATE ITEM# 6 & OVERALL WEIGHT; UPDATE ITEMS #38, 39 — JJC 10/16/12 — CHB 10/16/12
REV. DESCRIPTION — REV'D BY/ DATE — APP'D BY/ DATE

PROPRIETARY NOTICE
This information is considered the property of The Robbins Company, and remains their sole property. It shall not be used, reproduced, or disclosed to others in whole or in part without prior written consent of The Robbins Company. Any use or disclosure in violation of this restriction will be subject to the maximum penalties allowed by law. All drawings and designs furnished to purchaser are subject to the return upon request to The Robbins Company.

MACHINE	NEXT ASSY
S.F. SUBWAY	1049679

UNLESS NOTED ALL DIMS ARE Inch
TOLERANCES UNLESS NOTED
FRACTIONS ± 1/16 | .X ± .03 | .XX ± .015 | .XXX ± .005 | ANGLES ± 1 | SURFACE 125
DIMENSIONS (X) ARE REFERENCE
ALL GEOMETRIC DIMENSIONING & TOLERANCING PER ANSI Y14.5-2009

TITLE: S.F. SUBWAY SOUTH BOUND CHAMBER STRUCTURE

SIZE D | DWG No. 1050024 | REV 1 | SHT 1 OF 1 | SCALE 1:100 | DO NOT SCALE

DRAWN BY J.SLEDD | DATE 6/18/12 | CHECKED STANDARDS C.BESS | CHECKED DYNAMICS C.BESS | APPROVED BY T.BESS | DATE 9/13/12

WEIGHT TOTAL 13,012.0 lbs

Robbins

www.TheRobbinsCompany.com

1050024

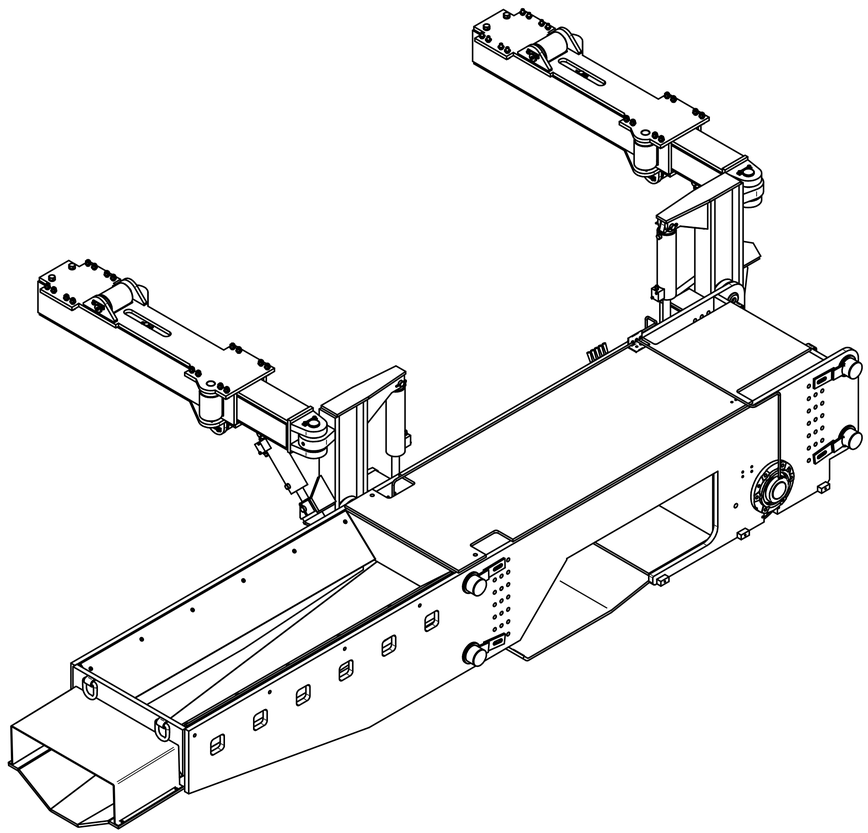

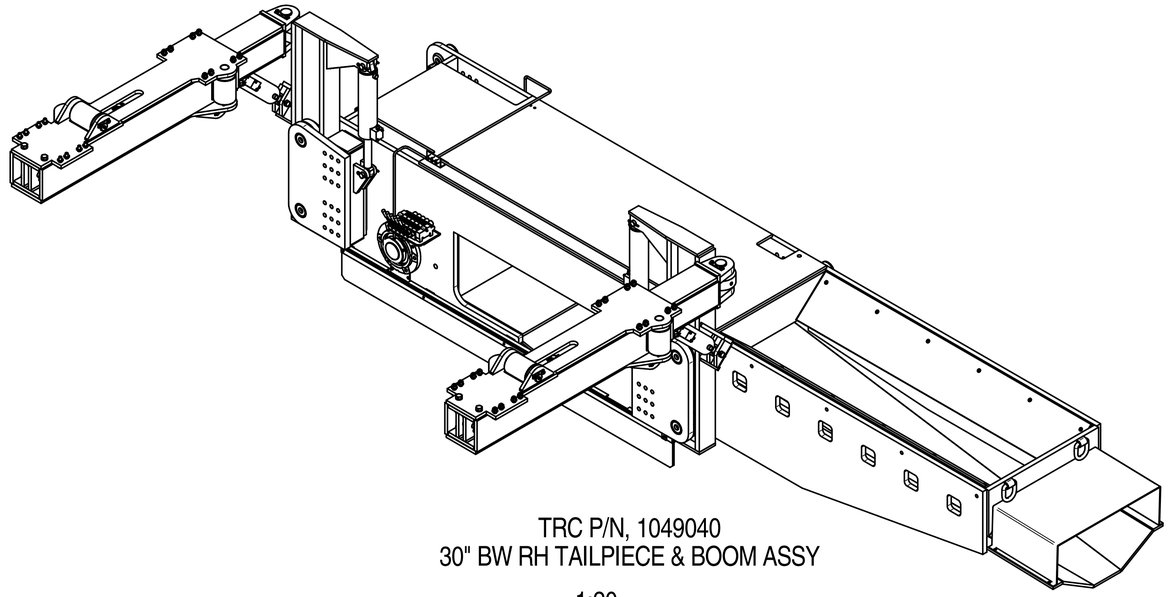

TRC P/N, 1049040
30" BW RH TAILPIECE & BOOM ASSY

1:20

QTY	PART No.	DESCRIPTION	DWG No.	WT. Total	ITEM
1	1048964	RH ADVANCING TAILPIECE ASSY	1048964	15058.9 lbm	1
2	1048963	RH OUTER TUBE WELDMENT	1048963	1853.5 lbm	2
2	1048965	INNER TUBE WELDMENT	1048965	1617.5 lbm	3
8	2002040	BOOM SUPPORT ROLLER AND MOUNTING	2002040	552.9 lbm	4
1	1048967	VERTICAL TRACK WELDMENT (LH)	1048967	654.9 lbm	5
1	1048959	VERTICAL TRACK WELDMENT (RH)	1048959	654.9 lbm	6
8	2001835	GUIDE ROLLER ASSEMBLY	2001835	230.8 lbm	7
2	2001836	EXTENSION CYLINDER BRACKET	2001836	115.7 lbm	8
2	80529X2	HYDRAULIC CYLINDER 4.5Bx16Sx25L	80529-2	126.0 lbm	9
2	80530	HYDRAULIC CYLINDER 4.5Bx5.6Sx20L	80530	106.0 lbm	10
2	80531	HYDRAULIC CYLINDER 5Bx14Sx25l	80531	196.0 lbm	11
2	2001839	VERTICAL TRACK PIN 3Ø x 9-5/8	2001839	39.4 lbm	12
2	80413X14	Ø3.00 SPHERICAL RADIAL BEARING	80413	16.6 lbm	13
2	652-185	SNAP RING, INTERNAL Ø4.75"		0.2 lbm	14
10	2001837	1-1/2Ø TYPE 'A' PIN	2001837	24.0 lbm	15
2	2001838	1-1/2Ø TYPE 'A' PIN	2001838	10.8 lbm	16
24	639-162	PIN, COTTER Ø3/8"x2-1/2" LG		2.2 lbm	17
1	2001851	VALVE BANK ASSEMBLY	2001851	48.6 lbm	18
1	D85197-1	PULLEY MOD KIT SCHEDULE	D85197	1.1 lbm	19
1	A84282-1	30MM SPEED SENSOR SWITCH	A84282	1.0 lbm	20
1	D85605-1	HYDRAULIC CIRCUIT	D85605	50.0 lbm	21
3	608-053	HHCS, Ø3/8"-16 UNCx1" G8		0.2 lbm	22
32	608-180	HHCS, Ø3/4"-10 UNCx2-3/4" G8		15.9 lbm	23
8	600-420	HB, Ø1"-8 UNCx3-1/2" G8		9.2 lbm	24
3	635-010	WASHER, LOCK Ø3/8"		0.0 lbm	25
32	635-015	WASHER, LOCK Ø3/4"		1.3 lbm	26
32	633-009	WASHER, PLAIN Ø3/4"		1.4 lbm	27
8	635-017	WASHER, LOCK Ø1"		0.8 lbm	28
24	625-008	NUT, Ø3/4"-10 UNC G8		3.3 lbm	29
8	625-010	NUT, Ø1"-8 UNC G8		2.6 lbm	30

1049040

PROPRIETARY NOTICE
The information disclosed herein is the sole property of The Robbins Company, and remains the sole property. It shall not be duplicated in full or part, used by, or disclosed to any other without prior written consent of The Robbins Company. By accepting this information, recipient agrees to abide by the terms of the Robbins Company. Any reproduction whatsoever is the condition. This material is on loan only, and is to be returned upon request to The Robbins Company.

MACHINE	NEXT ASSY
SAN FRANCISCO	

UNLESS NOTED ALL DIMS ARE inch
TOLERANCES UNLESS NOTED

FAB INCH		FRACTIONS	
0 - 1"	±1/16	X	±.03
1" - 5"	±1/8	XX	±.015
5" - 20"	±1/4	XXX	±.005
20" +	±1/2	ANGLES	±1°

THIRD ANGLE PROJECTION
SURFACE FINISH 125

DIMENSIONS (X) ARE REF
ALL GEOMETRIC DIMENSIONING & TOLERANCING PER ANSI Y14.5-2009

REV	DESCRIPTION	REV'D BY/ DATE	APP'D BY/ DATE

TITLE
30" BW RH TAILPIECE & BOOM ASSY

SIZE D | DWG No. 1049040 | REV 0 | SHT 1 OF 2 | SCALE SEE DETAIL | DO NOT SCALE

DRAWN BY J.WHITED | DATE 5/23/2012 | CHECKED STANDARDS T.BESS | CHECKED DESIGN T.BESS

WEIGHT TOTAL 21395.9 lbm | APPROVED BY T.BESS | DATE

Robbins

www.TheRobbinsCompany.com

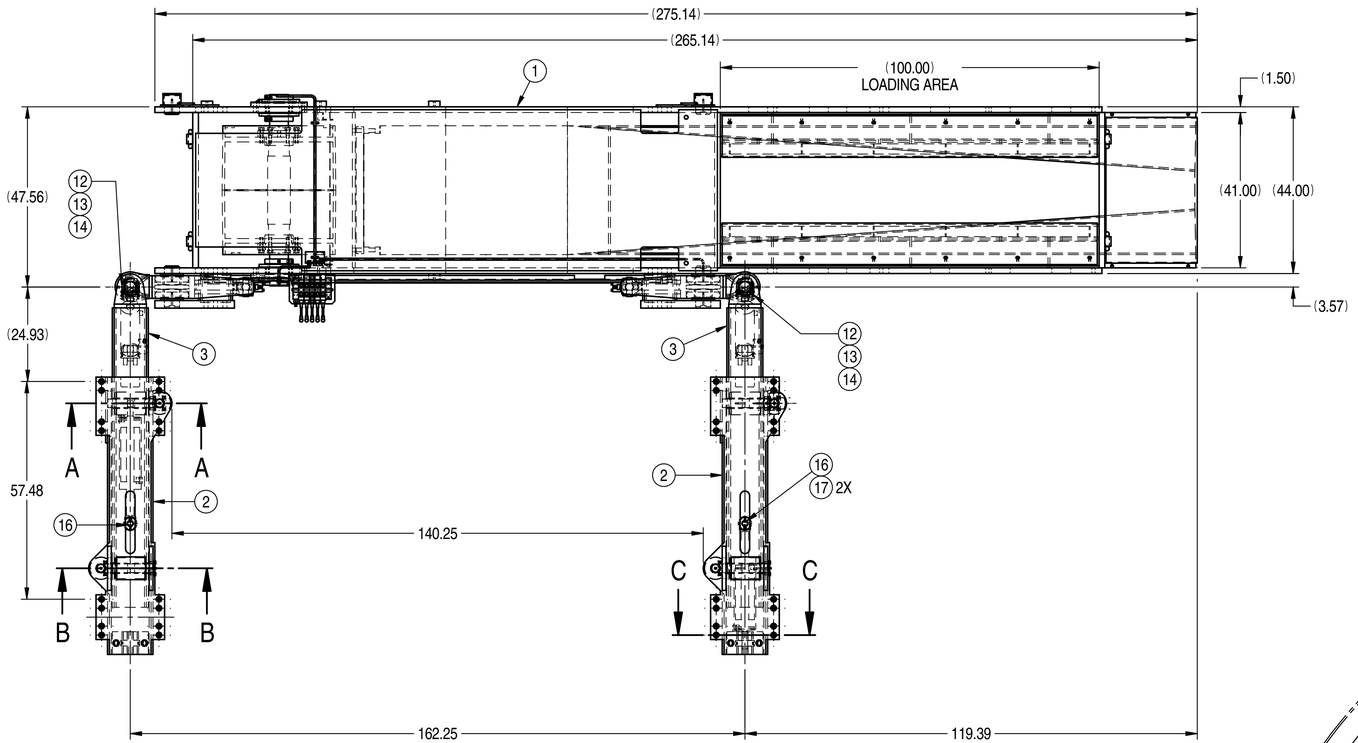

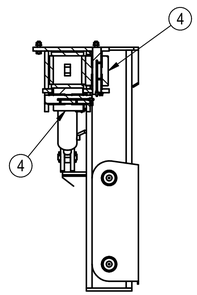

SECTION A-A
1:20

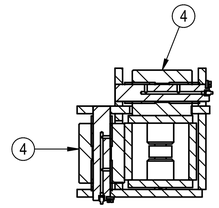

SECTION B-B
1:10

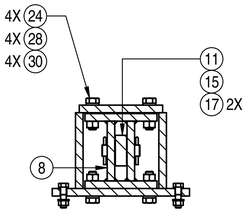

SECTION C-C
1:10

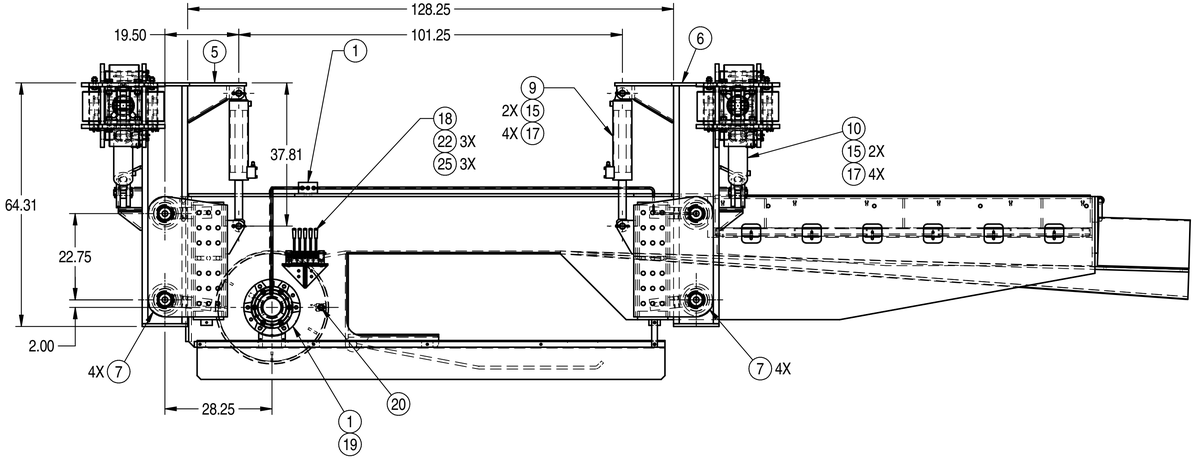

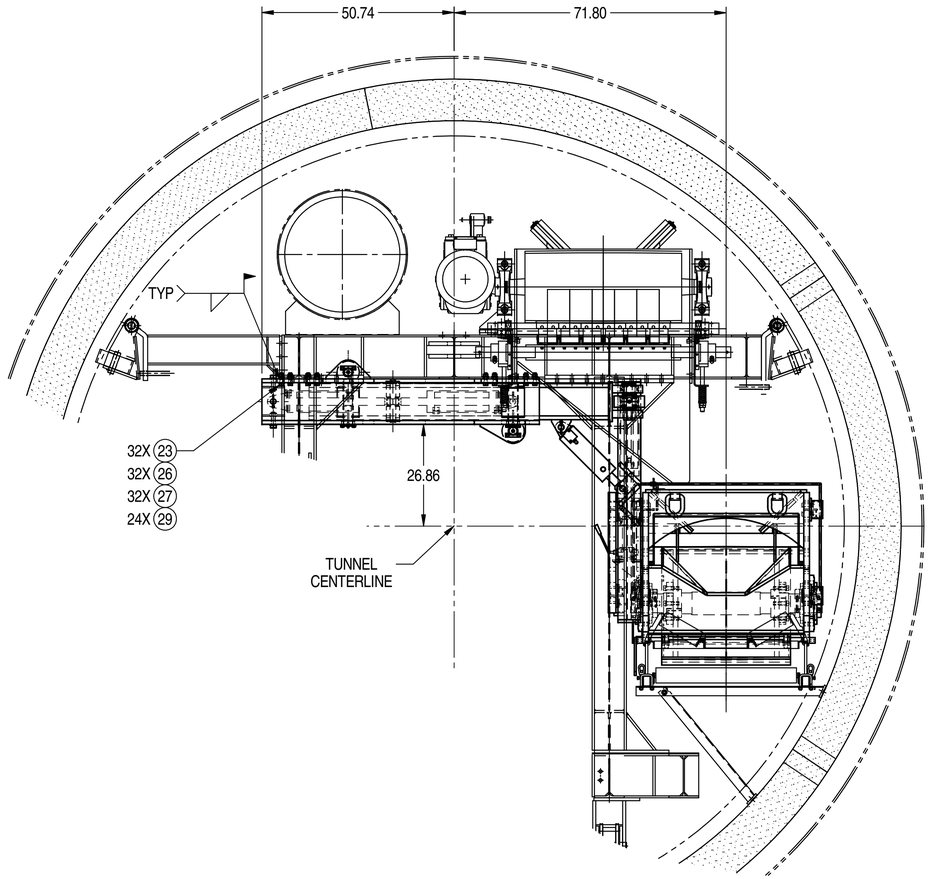

1049040

REV	DESCRIPTION	REV'D BY DATE	APP'D BY DATE

TITLE: 30" BW RH TAILPIECE & BOOM ASSY

MACHINE	NEXT ASSY
SAN FRANCISCO	

UNLESS NOTED ALL DIMS ARE inch

TOLERANCES UNLESS NOTED

0 - 1"	±1/16	FRACTIONS	±1/16
1" - 5"	±1/8	X	±.03
5" - 20"	±1/4	XX	±.015
20" +	±1/2	XXX	±.005
		ANGLES	±1°
		SURFACE FINISH	125

THIRD ANGLE PROJECTION

DIMENSIONS (X) ARE REF

ALL GEOMETRIC DIMENSIONING & TOLERANCING PER ANSI Y14.5-2009

SIZE: D | DWG No. 1049040 | REV 0 | SHT 2 OF 2 | SCALE SEE DETAIL

DO NOT SCALE

DRAWN BY J.WHITED | DATE 5/23/2012 | CHECKED STANDARDS T.BESS | CHECKED DESIGN T.BESS

WEIGHT TOTAL 21395.9 lbm | APPROVED BY T.BESS | DATE

Robbins

www.TheRobbinsCompany.com

PROPRIETARY NOTICE
The information disclosed herein is the sole property of The Robbins Company, and shall not be reproduced in whole or in part, used by, or disclosed to any other party without prior written consent of The Robbins Company. By accepting this information, recipient agrees to abide by the written consent, without any modification whatsoever to the conditions. This material is on loan only, and is to be returned upon request. The Robbins Company.

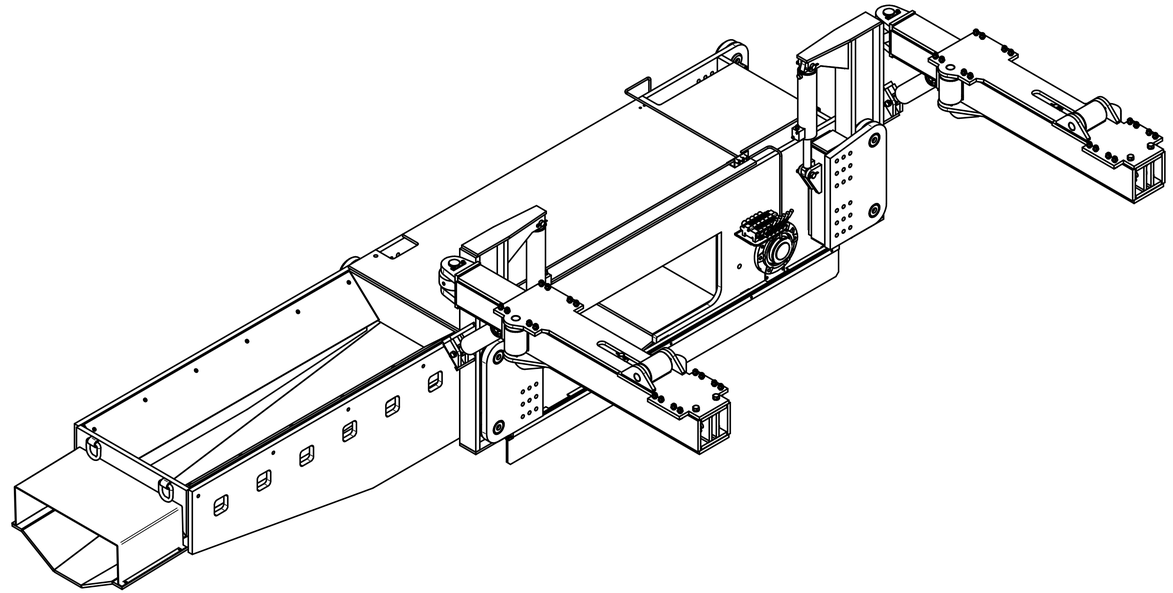

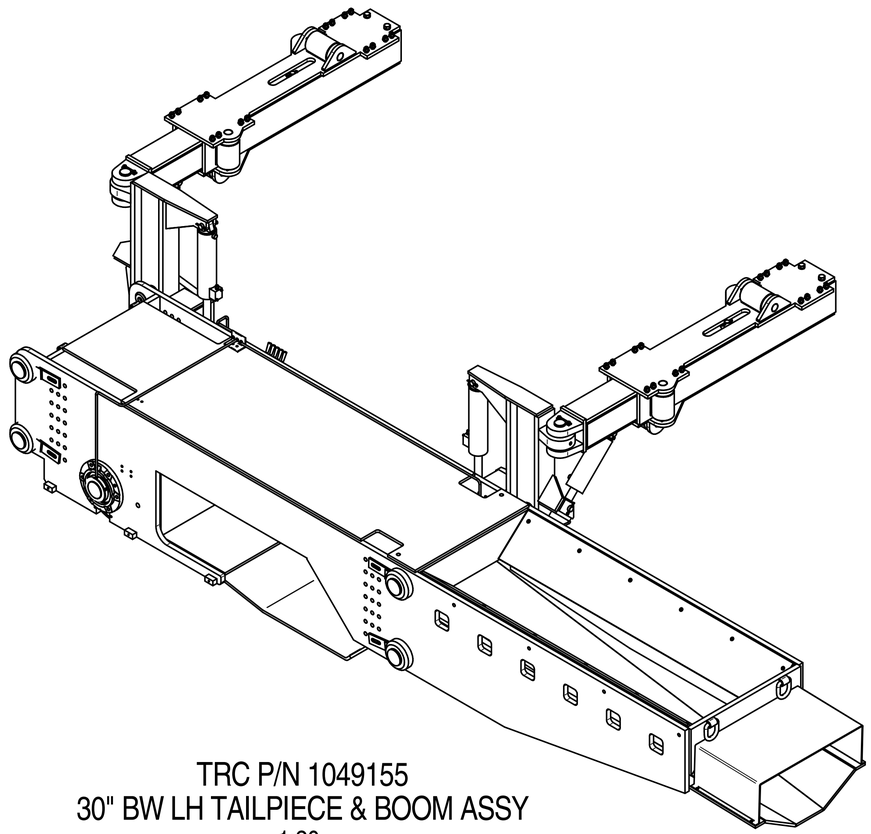

TRC P/N 1049155
30" BW LH TAILPIECE & BOOM ASSY
1:20

QTY	PART No.	DESCRIPTION	DWG No.	WT. Total	ITEM
1	1049158	LH ADVANCING TAILPIECE ASSY	1048964	15058.9 lbm	1
2	1049200	LH OUTER TUBE WELDMENT	1049200	1853.5 lbm	2
2	1048965	INNER TUBE WELDMENT	1048965	1617.5 lbm	3
8	2002040	BOOM SUPPORT ROLLER AND MOUNTING	2002040	552.9 lbm	4
1	1048967	VERTICAL TRACK WELDMENT (LH)	1048967	654.9 lbm	5
1	1048959	VERTICAL TRACK WELDMENT (RH)	1048959	654.9 lbm	6
8	2001835	GUIDE ROLLER ASSEMBLY	2001835	230.8 lbm	7
2	2001836	EXTENSION CYLINDER BRACKET	2001836	115.7 lbm	8
2	80529X2	HYDRAULIC CYLINDER 4.5Bx16Sx25L	80529-2	126.0 lbm	9
2	80530	HYDRAULIC CYLINDER 4.5Bx5.6Sx20L	80530	106.0 lbm	10
2	80531	HYDRAULIC CYLINDER 5Bx14Sx25l	80531	196.0 lbm	11
2	2001839	VERTICAL TRACK PIN 3Ø x 9-5/8	2001839	39.4 lbm	12
2	80413X14	Ø3.00 SPHERICAL RADIAL BEARING	80413	16.6 lbm	13
2	652-185	SNAP RING, INTERNAL Ø4.75"		0.2 lbm	14
10	2001837	1-1/2Ø TYPE 'A' PIN	2001837	24.0 lbm	15
2	2001838	1-1/2Ø TYPE 'A' PIN	2001838	10.8 lbm	16
24	639-162	PIN, COTTER Ø3/8"x2-1/2" LG		2.2 lbm	17
1	2001851	VALVE BANK ASSEMBLY	2001851	48.6 lbm	18
1	D85197-1	PULLEY MOD KIT SCHEDULE	D85197	1.1 lbm	19
1	A84282-1	30MM SPEED SENSOR SWITCH	A84282	1.0 lbm	20
1	D85605-1	HYDRAULIC CIRCUIT	D85605	50.0 lbm	21
3	608-053	HHCS, Ø3/8"-16 UNCx1" G8		0.2 lbm	22
32	608-180	HHCS, Ø3/4"-10 UNCx2-3/4" G8		15.9 lbm	23
8	600-420	HB, Ø1"-8 UNCx3-1/2" G8		9.2 lbm	24
3	635-010	WASHER, LOCK Ø3/8"		0.0 lbm	25
32	633-009	WASHER, PLAIN Ø3/4"		1.4 lbm	26
32	635-015	WASHER, LOCK Ø3/4"		1.3 lbm	27
8	635-017	WASHER, LOCK Ø1"		0.8 lbm	28
32	625-008	NUT, Ø3/4"-10 UNC G8		4.4 lbm	29
8	625-010	NUT, Ø1"-8 UNC G8		2.6 lbm	30

PROPRIETARY NOTICE
The information disclosed hereon, is the sole property of The Robbins Company and shall not be used, reproduced, or disclosed to any person, firm or corporation for any purpose whatsoever, in whole or in part, except by or disclosed to any employee of the Robbins Company who needs such information, recipient agrees to return it upon request and to keep it confidential. This material is on loan only, and is subject to the conditions. This material is on loan only, and is subject to the conditions of the agreement with The Robbins Company.

MACHINE	NEXT ASSY
SAN FRANCISCO	

UNLESS NOTED ALL DIMS ARE inch
TOLERANCES UNLESS NOTED
0 - 1 ±1/16
1 - 5' ±1/8
5 - 20' ±1/4
20' + ±1/2
FRACTIONS ±1/16
X ±.03
XX ±.015
XXX ±.005
ANGLES ±1°
SURFACE FINISH
THIRD ANGLE PROJECTION
DIMENSIONS (XX) ARE REF
ALL GEOMETRIC DIMENSIONING & TOLERANCING PER ANSI Y14.5-2009

REV	DESCRIPTION	REVD BY/ DATE	APP'D BY/ DATE

TITLE: 30" BW LH TAILPIECE & BOOM ASSY

SIZE: D | DWG No.: 1049155 | REV: 0 | SHT 1 OF 2 | SCALE: SEE DETAIL | DO NOT SCALE

DRAWN BY: J.WHITED
DATE: 5/23/2012
CHECKED STANDARDS: T.BESS
CHECKED DESIGN: T.BESS
WEIGHT TOTAL: 21397.0 lbm
APPROVED BY: T.BESS
DATE: 5/31/2012

Robbins

www.TheRobbinsCompany.com

1049155

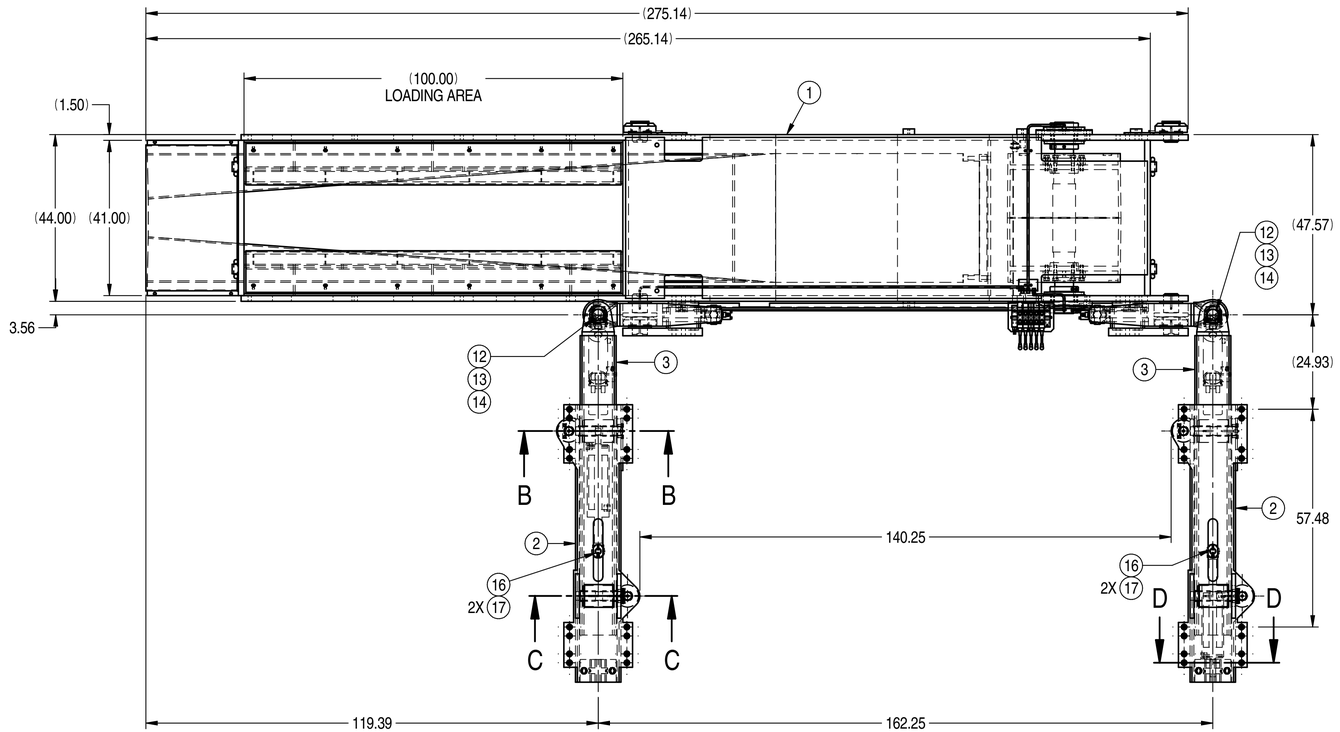

REV	DESCRIPTION	REV'D BY/ DATE	APP'D BY/ DATE

MACHINE	NEXT ASSY
SAN FRANCISCO	

UNLESS NOTED ALL DIMS ARE inch
TOLERANCES UNLESS NOTED

FRACTIONS	±1/16
X	±.03
XX	±.015
XXX	±.005
ANGLES	±1°
SURFACE FINISH	125

0 - 1' ±1/16
1' - 5' ±1/8
5' - 20' ±1/4
20' + ±1/2

THIRD ANGLE PROJECTION

DIMENSIONS (X) ARE REF

ALL GEOMETRIC DIMENSIONING & TOLERANCING PER ANSI Y14.5-2009

PROPRIETARY NOTICE
The information disclosed herein, is the sole property of Robbins Company and is not to be used without permission. It shall not be duplicated in full or part, used by or disclosed to any person, firm or corporation for any purpose except for Robbins Company. By accepting this information, recipient agrees to indemnify and hold harmless Robbins Company from any and all damages whatsoever for the conditions. This material is on loan only, and is to be returned upon request. Unauthorized use of this design is a violation of U.S. Copyright Laws.

TITLE
30" BW LH TAILPIECE & BOOM ASSY

SIZE	DWG No.	REV	SHT	OF	SCALE
D	1049155	0	2	2	SEE DETAIL

DO NOT SCALE

DRAWN BY	CHECKED STANDARDS
J.WHITED	T.BESS
DATE	CHECKED DESIGN
5/23/2012	T.BESS
WEIGHT TOTAL	APPROVED BY
21397.0 lbm	T.BESS
	DATE
	5/31/2012

Robbins

www.TheRobbinsCompany.com

1049155

QTY	PART No.	DESCRIPTION	DWG No.	WT. Total	ITEM
1	1049417	BELT ROLL STAND FRAME WELDMENT	1049417	1852.3 lbm	1
4	4002147	BRAKE BLOCK	4002147	33.7 lbm	2
2	4002149	BRAKE TOP PLATE	4002149	43.8 lbm	3
2	4002148	BELT SPOOL GUIDE	4002148	36.7 lbm	4
1	1049582	BELT ROLL SHAFT	1049582	84.5 lbm	5
8	600-104	HB, Ø1/2"-13 UNCx1-3/4" G8		1.2 lbm	12
8	633-006	WASHER, PLAIN Ø1/2"		0.3 lbm	13
8	635-012	WASHER, LOCK Ø1/2"		0.1 lbm	14
8	625-005	NUT, Ø1/2"-13 UNC G8		0.3 lbm	15
24	612-496	SHCS, Ø5/8"-11 UNCx3-1/2" G8		9.6 lbm	16
8	600-364	HB, Ø5/8"-11 UNCx9-1/2" G8		7.3 lbm	17
8	633-008	WASHER, PLAIN Ø5/8"		0.2 lbm	18

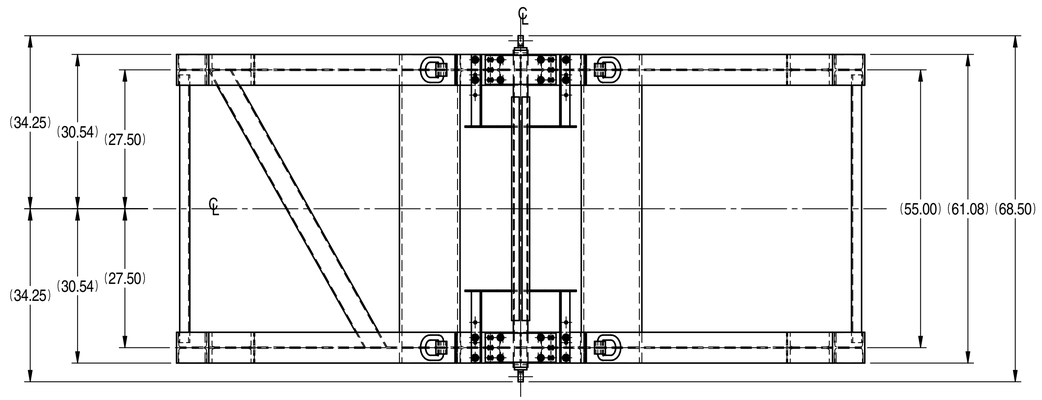

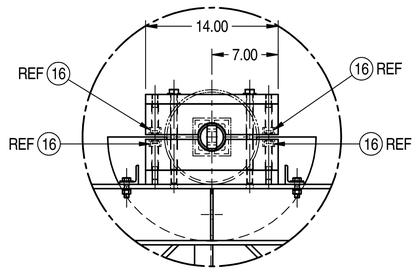

DETAIL A
1:8

TRC P/N 1049416
Ø120" BELT ROLL STAND ASSY
1:15

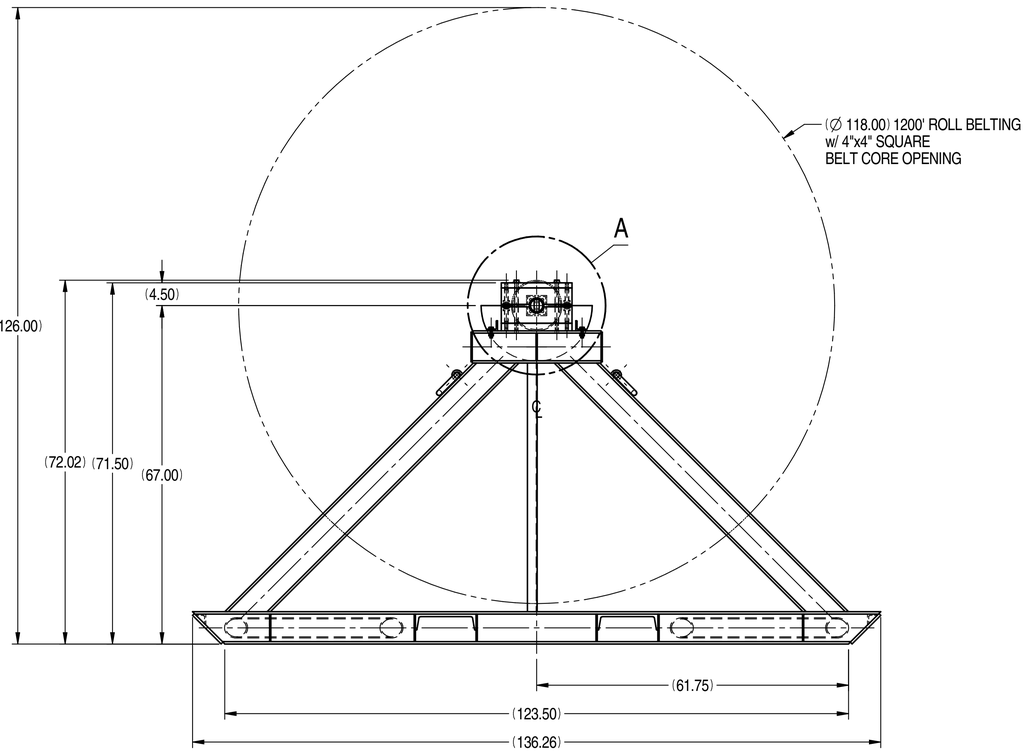

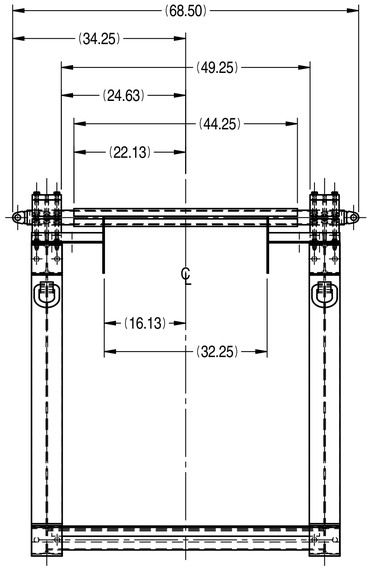

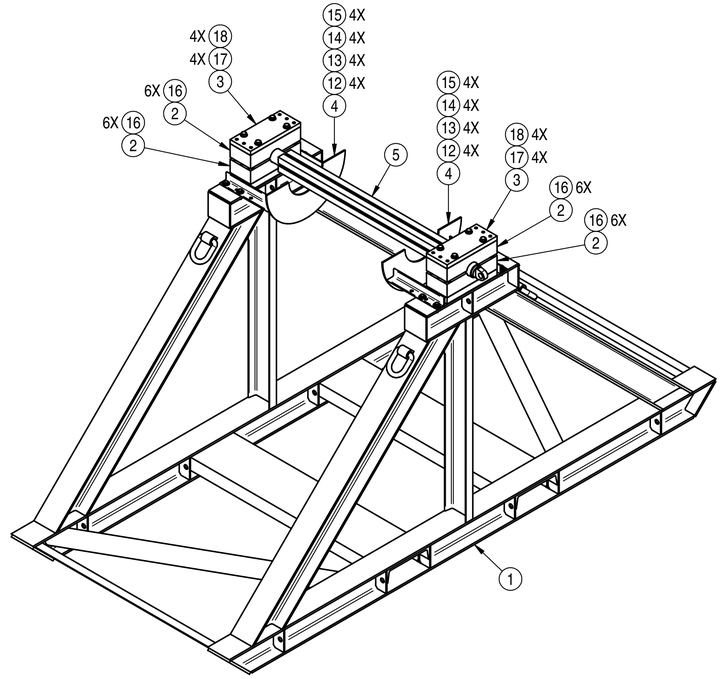

NOTES:

1. ALL WELDS ARE TO BE .25" CONTINUOUS FILLETS UNLESS OTHERWISE NOTED.
2. ALL WELDING SHALL MEET THE REQUIREMENTS OF THE LATEST EDITION OF THE AWS STRUCTURAL WELDING CODE - ALL SECTIONS AS APPLICABLE UNLESS OTHERWISE NOTED. USE E70XX LOW HYDROGEN ELECTRODES OR EQUIVALENT.

1049416

REV	DESCRIPTION	REV'D BY/ DATE	APP'D BY/ DATE

MACHINE	NEXT ASSY
S.F. SUBWAY	1049697

UNLESS NOTED ALL DIMS ARE inch
TOLERANCES UNLESS NOTED
0 - 1' ±1/16 | FRACTIONS ±1/16
1' - 5' ±1/8 | .X ±.03
5' - 20' ±1/4 | .XX ±.015
20' + ±1/2 | .XXX ±.005
ANGLES ±1°
SURFACE FINISH 125
THIRD ANGLE PROJECTION
DIMENSIONS (X) ARE REF
ALL GEOMETRIC DIMENSIONING & TOLERANCING PER ANSI Y14.5-2009

TITLE: Ø120" BELT ROLL STAND ASSY

SIZE: D | DWG No. 1049416 | REV 0 | SHT 1 OF 1 | SCALE SEE DETAIL | DO NOT SCALE

DRAWN BY C.LEGG | DATE 05/31/2012 | CHECKED STANDARDS C.BESS | CHECKED DESIGN C.BESS

WEIGHT TOTAL 1765.3 lbm | APPROVED BY T.BESS | DATE 06/06/2012

Robbins

www.TheRobbinsCompany.com

PROPRIETARY NOTICE
The information disclosed herein is the sole property of The Robbins Company, and remains the sole property it shall not be duplicated in full or part, used by, or disclosed to any other party without written consent of The Robbins Company. By accepting this information, recipient agrees to abide in the use of this information, without any modification whatsoever to the conditions. This material is on loan only, and is to be returned upon request to The Robbins Company.

SECTION A–A

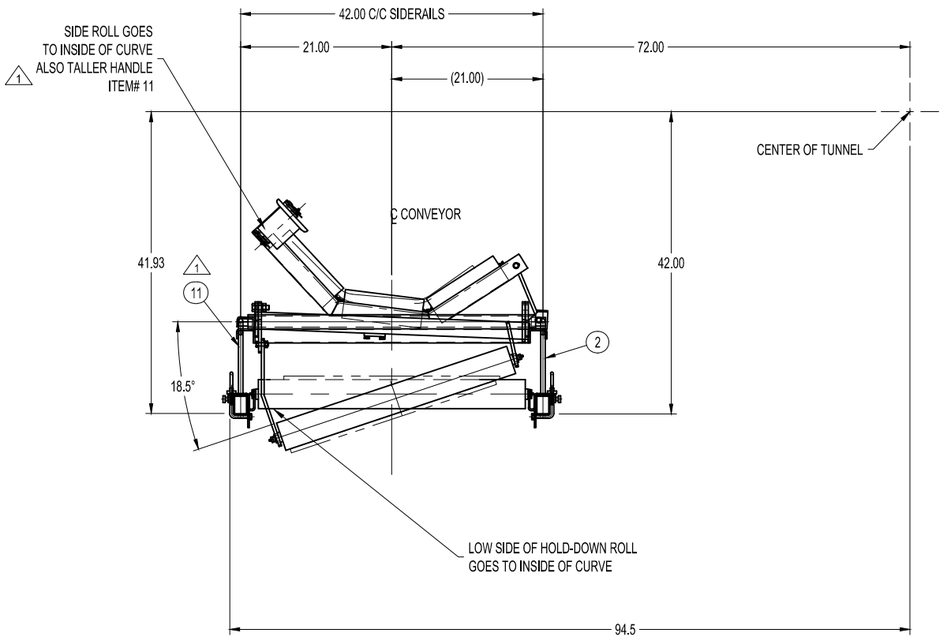

	QTY	PART No.	DESCRIPTION	DWG No.	WT. Total	ITEM
	2	81076	15' SIDERAIL LINK	81076	105.8 lb	1
1	4	81283X318	METRIC BOLT-ON SUITCASE HANDLE	81283	31.6 lb	2
	2	4000511	30"BW CURVE CIA	4000511	173.8 lb	3
	1	1050378	400'-499' 30"BW H-D ASSEMBLY	1050378	82.2 lb	4
	1	81079X1	HD 30" RETURN ROLLER	81079X1	35.1 lb	5
	2	81080	RETURN ROLL BRACKET	81080	3.6 lb	6
	8	80233	M12 J-BOLT	80233	1.6 lb	7
	8	80234	M12 LOOP NUT	80234	0.8 lb	8
	2	80505	JOINT PIN	80505	0.2 lb	9
	2	80504	HITCH PIN CLIP	80504	0.2 lb	10
1	2	81283X360	METRIC BOLT-ON SUITCASE HANDLE	81283	16.4 lb	11
2	2	81082X10	M12 U-BOLT FOR 50X70 SIDERAIL	81082-10	0.4 lb	12
2	4	A22158-4	WASHER, HD NW, OD M12	A22158	0.1 lb	13
2	4	A82384-4	M12, WASHER, LOCK	A82384	0.1 lb	14
2	4	A22154-45	NUT, M12, G8	A22154	0.1 lb	15

NOTES:

1. MARK ROBBINS PART NUMBERS ON LOOSE PARTS WITH PAINT PEN OR EQUIVALENT TO FACILITATE ASSEMBLY AT JOBSITE. (THIS DOES NOT INCLUDE FASTENER TYPE ITEMS 7 THRU 10)

1 2. PAINT ITEM# 11 ROBBINS BLUE FOR IDENTIFICATION PURPOSES

TRC P/N: 1050410

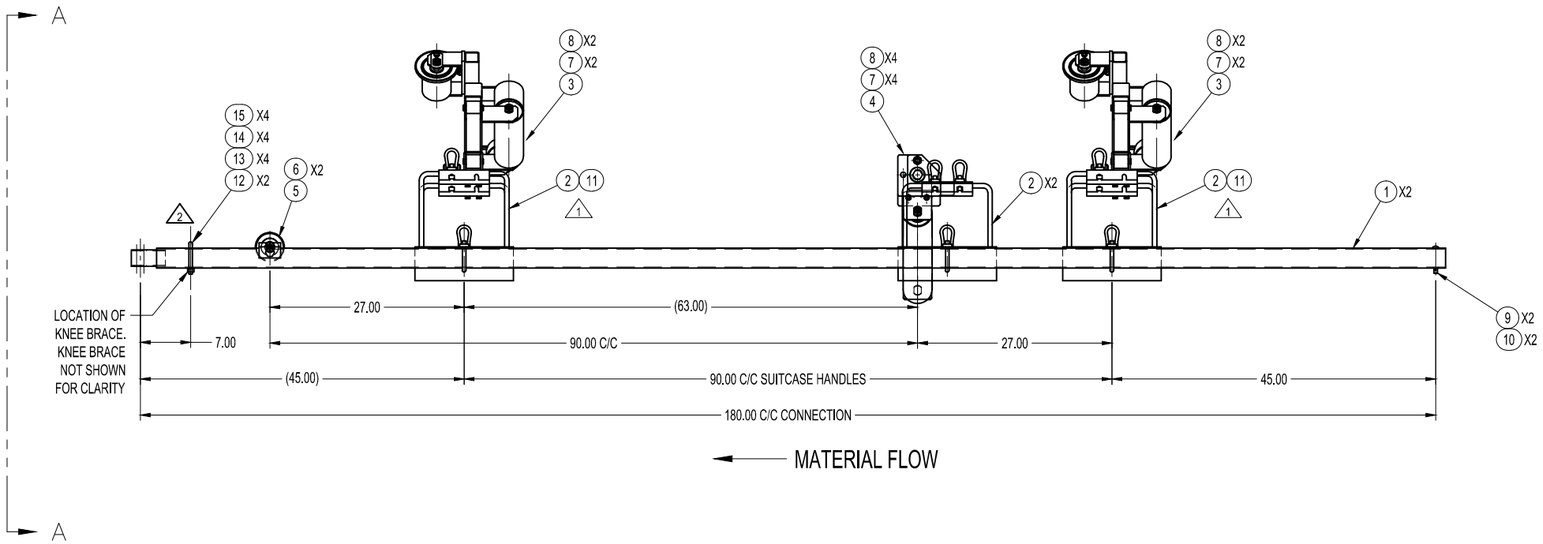

REV	DESCRIPTION	REV'D BY / DATE	APP'D BY / DATE
2	ADDED M12 U-BOLT AND HARDWARE AND UPDATED BOM	AWB 10/3/12	C. BESS 10/3/12
1	UPDATE BOM, ADD ITEM# 11 UPDATE VIEWS	JJC 6/29/2012	C.BESS

TITLE: 30"BW 400'-499' RADIUS CURVE STRUCTURE ASSEMBLY

MACHINE	NEXT ASSY
S.F. SUBWAY	1049679

UNLESS NOTED ALL DIMS ARE inch

TOLERANCES UNLESS NOTED

0' - 1'	± 1/8	FRACTIONS ± 1/16	
1' - 5'	± 1/8	.X ± .03	
5' - 20'	± 1/4	.XX ± .015	
20' +	± 1/2	.XXX ± .005	
		ANGLES ± 1°	
MACHINING PROCESS		SURFACE 250	
DIMENSIONS IN ARE REFERENCE			
ALL GEOMETRIC DIMENSIONING & TOLERANCING PER ANSI Y14.5-2009			

SIZE D | DWG NO. 1050410 | REV 2 | SHT 1 OF 1 | SCALE 1:10 | DO NOT SCALE

DRAWN BY J.CHANCEY DATE 6/28/2012 | CHECKED 1ST/HARDES C.BESS | CHECKED 2ND/BOM C.BESS | APPROVED BY T.BESS DATE 6/26/2012

WEIGHT TOTAL 453.3 lb

Robbins

www.TheRobbinsCompany.com

1050410

PROPRIETARY NOTICE
The information disclosed hereon, is the sole property of The Robbins Company and is not to be used, copied, or disclosed for the duplication in full or part, used for, or disclosed to any person, firm or corporation for any purpose whatsoever without the written permission of The Robbins Company. By accepting this information, recipient agrees to indemnify and hold harmless The Robbins Company for any and all losses or damages resulting from the unauthorized disclosure or the conditions, this material is on loan only, and upon request will be returned to The Robbins Company.

SECTION A–A

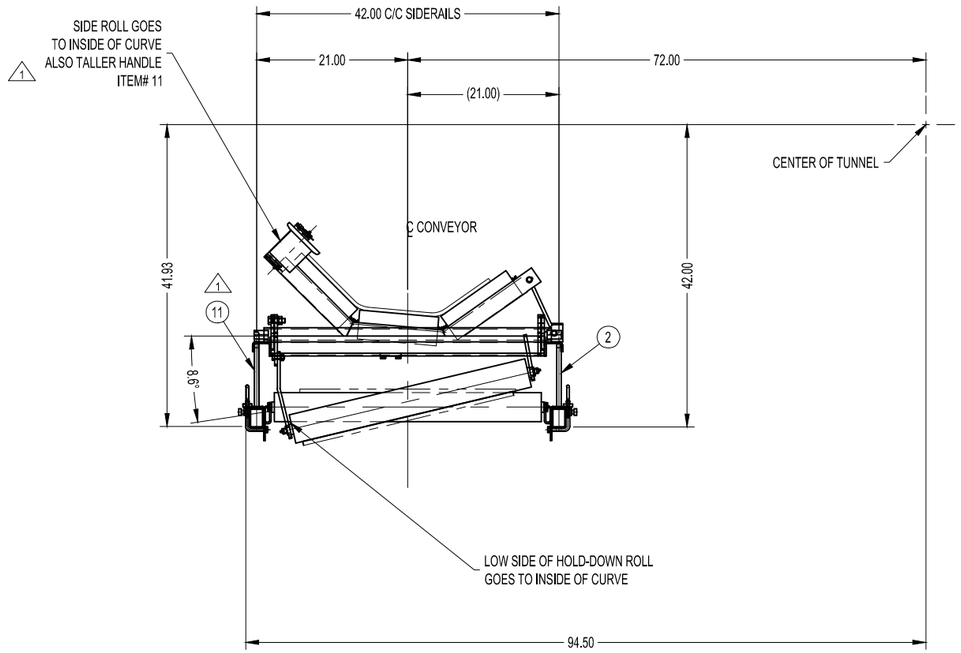

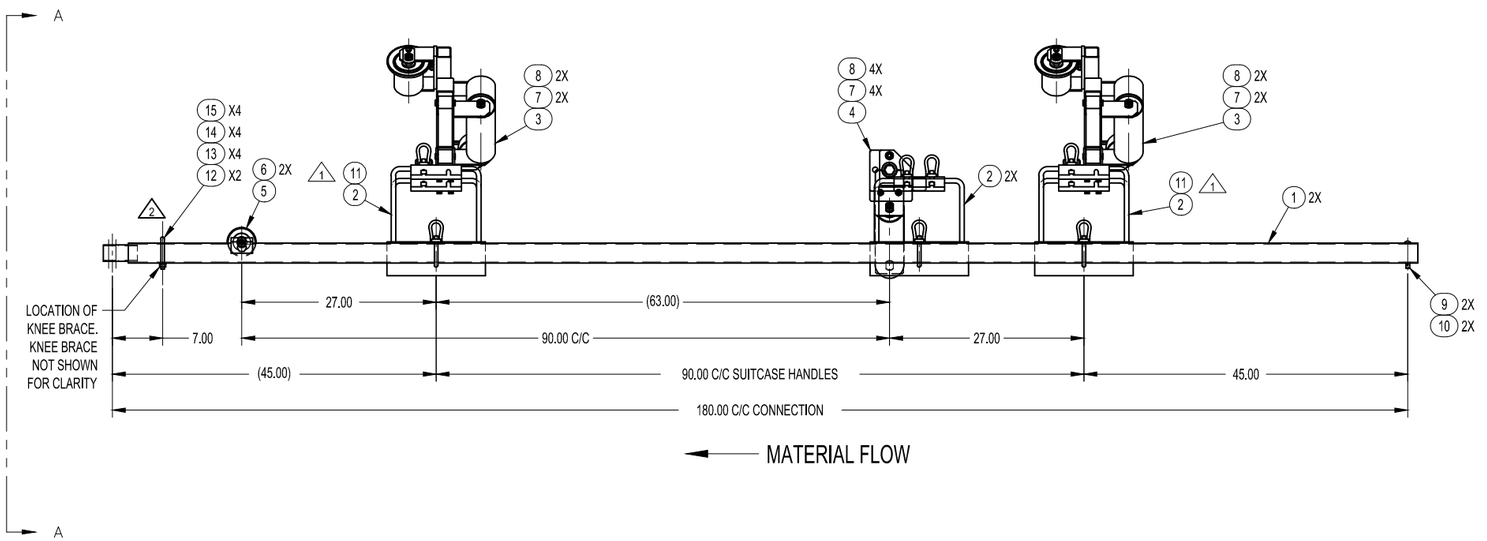

MATERIAL FLOW

	QTY	PART No.	DESCRIPTION	DWG No.	WT. Total	ITEM
	2	81076	15' SIDERAIL LINK	81076	105.8 lb	1
1	4	81283X318	METRIC BOLT-ON SUITCASE HANDLE	81283X318	31.6 lb	2
	2	4000511	30"BW CURVE CIA	4000511	173.8 lb	3
	1	4000520	750'-949' 30"BW H-D ASSY	4000520	81.4 lb	4
	1	81079X1	HD 30" RETURN ROLLER	81079X1	35.1 lb	5
	2	81080	RETURN ROLL BRACKET	81080	3.6 lb	6
	8	80233	M12 J-BOLT	80233	1.6 lb	7
	8	80234	M12 LOOP NUT	80234	0.8 lb	8
	2	80505	JOINT PIN	80505	0.2 lb	9
	2	80504	HITCH PIN CLIP	80504	0.2 lb	10
1	2	81283X360	METRIC BOLT-ON SUITCASE HANDLE	81283	16.4 lb	11
2	2	81082X10	M12 U-BOLT FOR 50X70 SIDERAIL	81082-10	0.4 lb	12
2	4	A22158-4	WASHER, HD NW, OD M12	A22158	0.1 lb	13
2	4	A82384-4	M12, WASHER, LOCK	A82384	0.1 lb	14
2	4	A22154-45	NUT, M12, G8	A22154	0.1 lb	15

NOTES:

1. MARK ROBBINS PART NUMBERS ON LOOSE PARTS WITH PAINT PEN OR EQUIVALENT TO FACILITATE ASSEMBLY AT JOBSITE. (THIS DOES NOT INCLUDE FASTENER TYPE ITEMS 7 THRU 10)

1 2. PAINT ITEM# 11 ROBBINS BLUE FOR IDENTIFICATION PURPOSES

REV	DESCRIPTION	REVD BY / DATE	APP'D BY / DATE
2	ADDED M12 U-BOLT AND HARDWARE AND UPDATED BOM	AWB 10/3/12	C. BESS 10/3/12
1	UPDATE BOM, ADD ITEM# 11 UPDATE VIEWS	JJC 7/9/2012	C.BESS

PROPRIETARY NOTICE
This information disclosed hereon, is the sole property of The Robbins Company and is not to be used, reproduced in whole or in part, used for, or disclosed to any other party without written consent of The Robbins Company. By accepting this information, recipient agrees to these restrictions and to return this information upon request or whenever it is in the best interest of The Robbins Company.

MACHINE	NEXT ASSY
S.F. BAY	1049679

UNLESS NOTED ALL DIMS ARE inch

TOLERANCES UNLESS NOTED		
0 - 1	± 1/16	FRACTIONS ± 1/8
1 - 5	± 1/8	.X ± .03
5 - 20	± 1/4	.XX ± .015
20 +	± 1/2	.XXX ± .005
MACHINING FITS		ANGLES ± 1
IN MACHINED AREAS		SURFACE 250
DIMENSIONS IN () ARE REFERENCE		Units
ALL GEOMETRIC DIMENSIONING & TOLERANCING PER ANSI Y14.5-2009		

30"BW 750'-949' RADIUS CURVE STRUCTURE ASSEMBLY

SIZE	DWG NO.	REV	SHT	SCALE
D	1046680	2	1 OF 1	1:10

DO NOT SCALE

DRAWN BY	CHECKED BY/DATE
J.SLEDD 3/12/2012	C.BESS
	CHECKED BY/DATE C.BESS
WEIGHT TOTAL 452.5 lb	APPROVED BY T.BESS DATE 6/6/2012

Robbins

www.TheRobbinsCompany.com

1046680

SECTION A–A

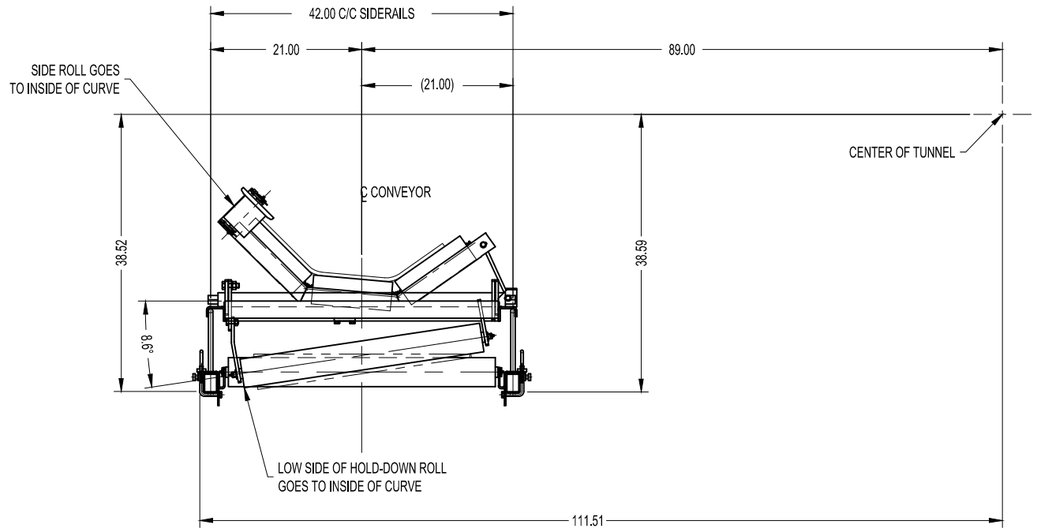

QTY	PART No.	DESCRIPTION	DWG No.	WT. Total	ITEM
2	81076	15' SIDERAIL LINK	81076	105.8 lb	1
6	81283X318	METRIC BOLT-ON SUITCASE HANDLE	81283X318	51.0 lb	2
2	4000511	30"BW CURVE CIA	4000511	173.8 lb	3
1	4000523	1700'-2499' 30"BW H-D ASSY	4000523	80.0 lb	4
1	81079X1	HD 30" RETURN ROLLER	81079X1	35.1 lb	5
2	81080	RETURN ROLL BRACKET	81080	3.6 lb	6
8	80233	M12 J-BOLT	80233	1.6 lb	7
8	80234	M12 LOOP NUT	80234	0.8 lb	8
2	80505	JOINT PIN	80505	0.2 lb	9
2	80504	HITCH PIN CLIP	80504	0.2 lb	10
2	81082X10	M12 U-BOLT FOR 50X70 SIDERAIL	81082-10	0.4 lb	11
4	A22158-4	WASHER, HD NW, OD M12	A22158	0.1 lb	12
4	A82384-4	M12, WASHER, LOCK	A82384	0.1 lb	13
4	A22154-45	NUT, M12, G8	A22154	0.1 lb	14

NOTES:

1. MARK ROBBINS PART NUMBERS ON LOOSE PARTS WITH PAINT PEN OR EQUIVALENT TO FACILITATE ASSEMBLY AT JOBSITE. (THIS DOES NOT INCLUDE FASTENER TYPE ITEMS 7 THRU 10)

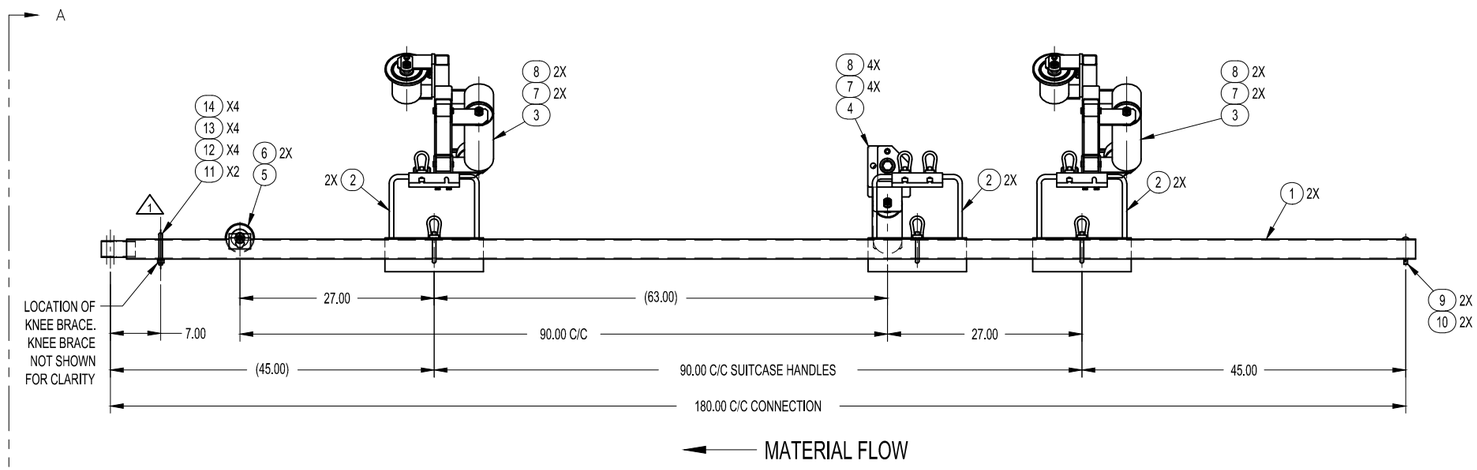

REV	DESCRIPTION	REVD BY / DATE	APP'D BY / DATE
1	ADDED M12 U-BOLT AND HARDWARE AND UPDATED BOM	AWB 10/3/12	C. BESS 10/3/12

TITLE: 30"BW 1700'-2499' RADIUS CURVE STRUCTURE ASSEMBLY

MACHINE	NEXT ASSY
S.F. BAY	1046679

UNLESS NOTED ALL DIMS ARE inch

TOLERANCES UNLESS NOTED

		FRACTION	X/X=/16
0 - 1'	± 1/16	X	± .03
1' - 5'	± 1/8	.XX	± .015
5' - 20'	± 1/4	.XXX	± .005
20' +	± 1/2	ANGLES	± 1°
		SURFACE	250

MACHINING (CRITICAL DIMS)

3RD ANGLE PROJECTION

DIMENSIONS IN ARE REFERENCE

ALL GEOMETRIC DIMENSIONING & TOLERANCING PER ANSI Y14.5-2009

SIZE: D | DWG NO: 1046677 | REV: 1 | SHT 1 OF 1 | SCALE: 1:10 | DO NOT SCALE

DRAWN BY: J.SLEDD | DATE: 3/12/2012

CHECKED STATIONERS: C.BESS

CHECKED DESIGN: C.BESS

APPROVED BY: T.BESS | DATE: 6/6/2012

WEIGHT TOTAL: 454.1 lb

Robbins

www.TheRobbinsCompany.com

1046677

PROPRIETARY NOTICE
The information disclosed herein, is the sole property of The Robbins Company. Any reproduction in part or as a whole without the written permission of The Robbins Company is prohibited. By accepting this information, recipient agrees to use it only for the purpose for which it is intended and in accordance with the conditions. This material is confidential and is not to be disclosed to any unauthorized person. © The Robbins Company

SECTION A–A

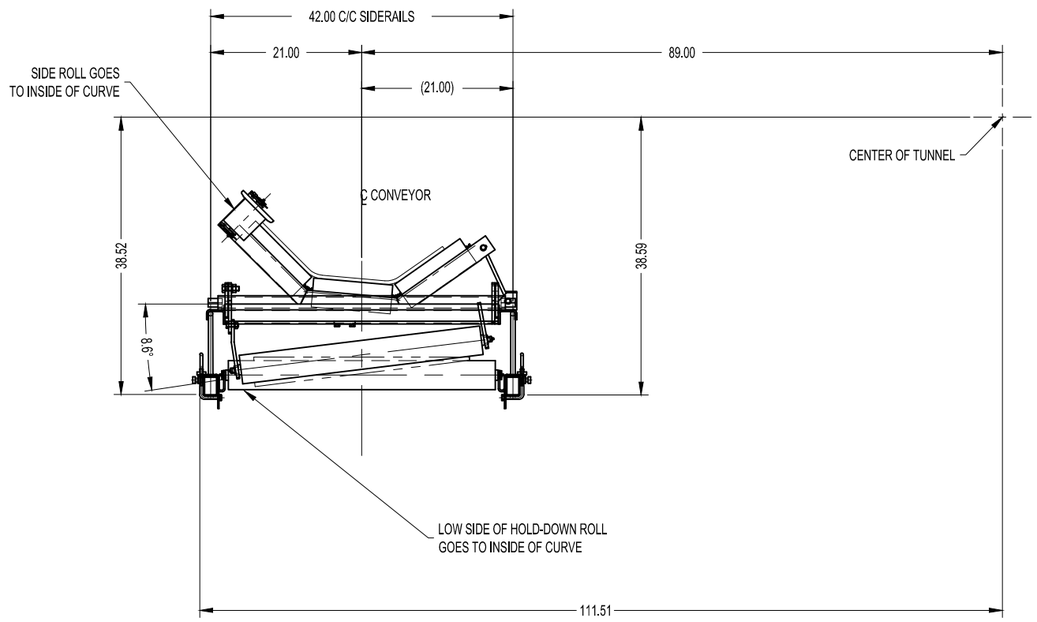

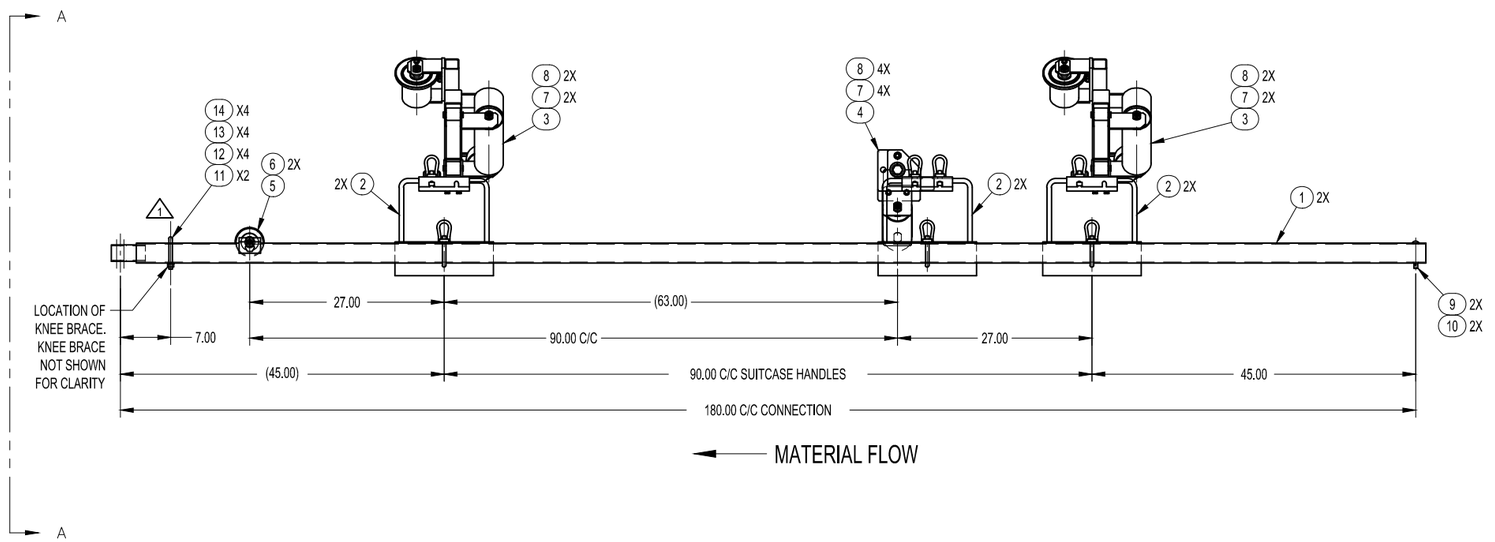

QTY	PART No.	DESCRIPTION	DWG No.	WT. Total	ITEM
2	81076	15' SIDERAIL LINK	81076	105.8 lb	1
6	81283X318	METRIC BOLT-ON SUITCASE HANDLE	81283X318	51.0 lb	2
2	4000511	30"BW CURVE CIA	4000511	173.8 lb	3
1	4000524	2500'-3999' 30"BW H-D ASSY	4000524	79.6 lb	4
1	81079X1	HD 30" RETURN ROLLER	81079X1	35.1 lb	5
2	81080	RETURN ROLL BRACKET	81080	3.6 lb	6
8	80233	M12 J-BOLT	80233	1.6 lb	7
8	80234	M12 LOOP NUT	80234	0.8 lb	8
2	80505	JOINT PIN	80505	0.2 lb	9
2	80504	HITCH PIN CLIP	80504	0.2 lb	10
2	81082X10	M12 U-BOLT FOR 50X70 SIDERAIL	81082-10	0.4 lb	11
4	A22158-4	WASHER, HD NW, OD M12	A22158	0.1 lb	12
4	A82384-4	M12, WASHER, LOCK	A82384	0.1 lb	13
4	A22154-45	NUT, M12, G8	A22154	0.1 lb	14

NOTES:

1. MARK ROBBINS PART NUMBERS ON LOOSE PARTS WITH PAINT PEN OR EQUIVALENT TO FACILITATE ASSEMBLY AT JOBSITE. (THIS DOES NOT INCLUDE FASTENER TYPE ITEMS 7 THRU 10)

REV	DESCRIPTION	REVD BY / DATE	APP'D BY / DATE
1	ADDED M12 U-BOLT AND HARDWARE AND UPDATED BOM	AWB 10/3/12	C. BESS 10/3/12

PROPRIETARY NOTICE
This information disclosed hereon, is the sole property of The Robbins Company and may not be reproduced in full or part, used by, or disclosed to any Company. By accepting this information, recipient agrees to safeguard it in the conditions, this material is on loan only, and will be returned to The Robbins Company upon request.

MACHINE	NEXT ASSY
S.F. BAY	1049679

UNLESS NOTED ALL DIMS ARE inch

TOLERANCES UNLESS NOTED

		FRACTIONS	±
0 - 1'	± 1/16	X	± .03
1' - 5'	± 1/8	.XX	± .015
5' - 20'	± 1/4	.XXX	± .005
20' +	± 1/2	ANGLES	± 1
		SURFACE	250

MACHINING LEVEL 2 (Table)

DIMENSIONS IN ( ) ARE REFERENCE

ALL GEOMETRIC DIMENSIONING & TOLERANCING PER ANSI Y14.5-2009

30"BW 2500'-3999' RADIUS CURVE STRUCTURE ASSEMBLY

SIZE	DWG NO.	REV	SHT	SCALE
D	1046682	1	1 OF 1	1:10

DO NOT SCALE

DRAWN BY	CHECKED BY/DATE
J.SLEDD 3/12/2012	C.BESS
WEIGHT TOTAL	CHECKED BY/DATE
453.7 lb	C.BESS
	APPROVED BY / DATE
	T.BESS 6/6/2012

Robbins

www.TheRobbinsCompany.com

1046682

SECTION A–A

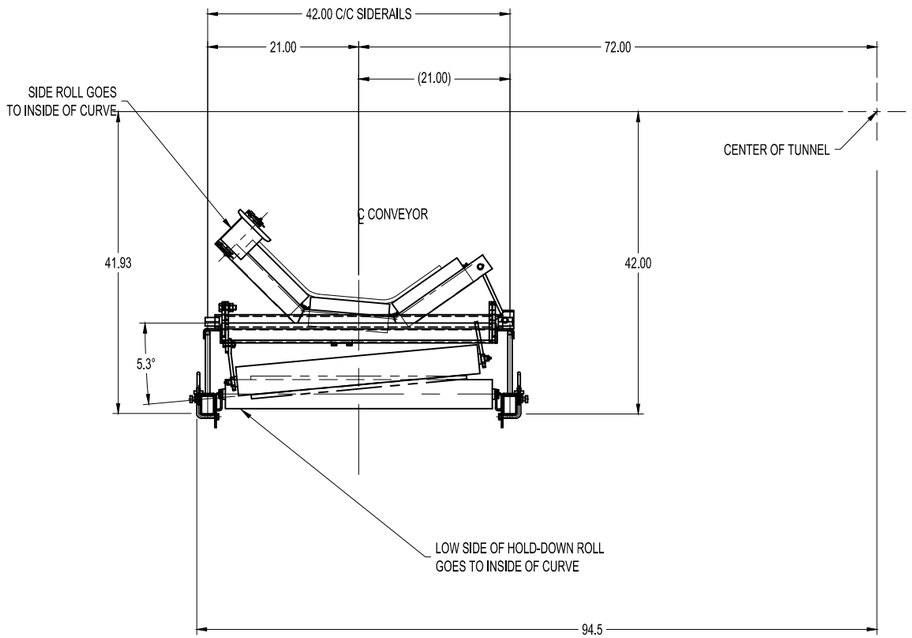

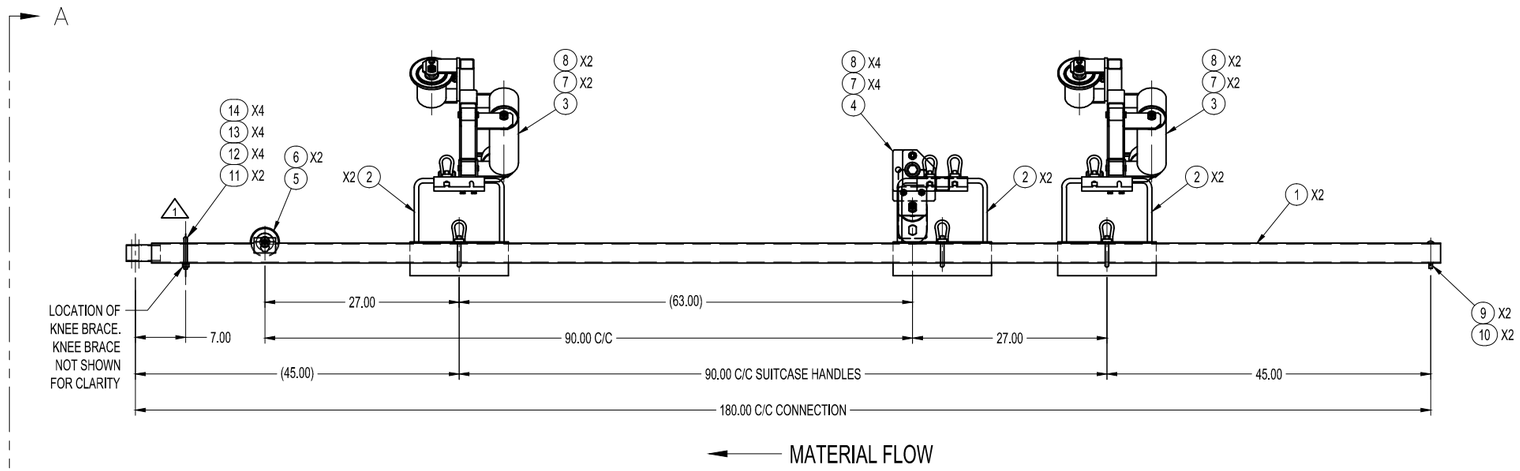

QTY	PART No.	DESCRIPTION	DWG No.	WT. Total	ITEM
2	81076	15' SIDERAIL LINK	81076	105.8 lb	1
6	81283X318	METRIC BOLT-ON SUITCASE HANDLE	81283X318	51.0 lb	2
2	4000511	30"BW CURVE CIA	4000511	173.8 lb	3
1	4000525	4000'-7249' 30"BW H-D ASSEMBLY	4000525	79.2 lb	4
1	81079X1	HD 30" RETURN ROLLER	81079X1	35.1 lb	5
2	81080	RETURN ROLL BRACKET	81080	3.6 lb	6
8	80233	M12 J-BOLT	80233	1.6 lb	7
8	80234	M12 LOOP NUT	80234	0.8 lb	8
2	80505	JOINT PIN	80505	0.2 lb	9
2	80504	HITCH PIN CLIP	80504	0.2 lb	10
2	81082X10	M12 U-BOLT FOR 50X70 SIDERAIL	81082-10	0.4 lb	11
4	A22158-4	WASHER, HD NW, OD M12	A22158	0.1 lb	12
4	A82384-4	M12, WASHER, LOCK	A82384	0.1 lb	13
4	A22154-45	NUT, M12, G8	A22154	0.1 lb	14

TRC P/N: 1050327

NOTES:

1. MARK ROBBINS PART NUMBERS ON LOOSE PARTS WITH PAINT PEN OR EQUIVALENT TO FACILITATE ASSEMBLY AT JOBSITE. (THIS DOES NOT INCLUDE FASTENER TYPE ITEMS 7 THRU 10)

REV	DESCRIPTION	REVD BY / DATE	APP'D BY / DATE
1	ADDED M12 U-BOLT AND HARDWARE AND UPDATED BOM	AWB 10/3/12	C. BESS 10/3/12

TITLE: 30"BW 4000'-7250' RADIUS CURVE STRUCTURE ASSEMBLY

MACHINE	NEXT ASSY
S.F. SUBWAY	1049679

UNLESS NOTED ALL DIMS ARE inch

TOLERANCES UNLESS NOTED

0' - 1'	± 1/8	FRACTIONS	± 1/16
1' - 5'	± 1/8	.X	± .03
5' - 20'	± 1/4	.XX	± .015
20' +	± 1/2	.XXX	± .005
		ANGLES	± 1°
MACHINING PROCESS		SURFACE FINISH	250

DIMENSIONING REFERENCE: ALL GEOMETRIC DIMENSIONING & TOLERANCING PER ANSI Y14.5-2009

SIZE	DWG NO.	REV
D	1050327	1

SHT 1 OF 1 | SCALE 1:10 | DO NOT SCALE

DRAWN BY	CHECKED BY/DATE
J.CHANCEY 6/25/2012	C.BESS C.BESS

WEIGHT TOTAL: 453.3 lb

APPROVED BY	DATE
T.BESS	6/25/2012

Robbins

www.TheRobbinsCompany.com

PROPRIETARY NOTICE
The information disclosed herein, is the sole property of The Robbins Company. Any reproduction in part or as a whole without the written permission of The Robbins Company is prohibited. By accepting this information, recipient agrees to not use, reproduce, or disclose to others except its employees in the conditions, this material is confidential. FAB 0000

1050327

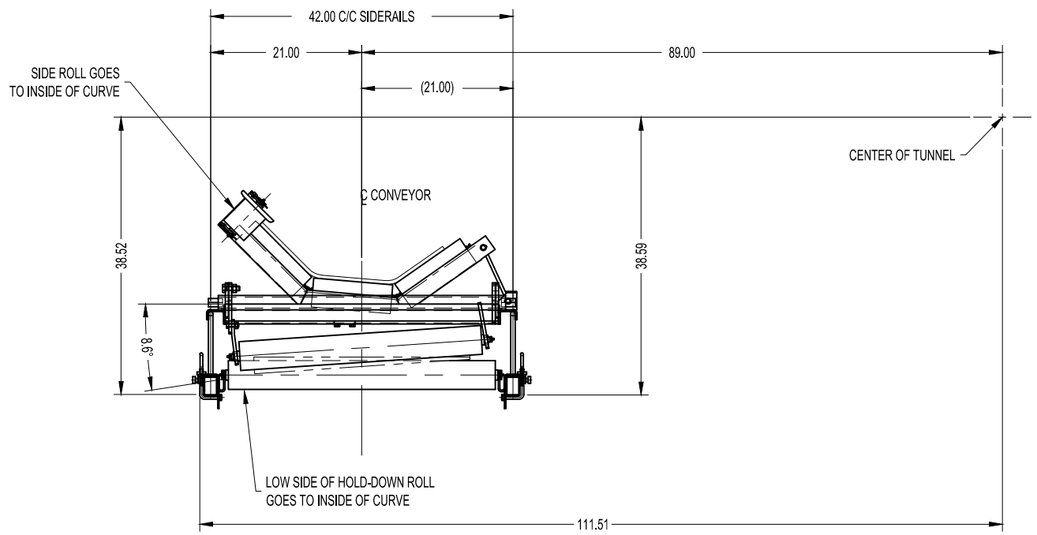

	QTY	PART No.	DESCRIPTION	DWG No.	WT. Total	ITEM
	2	81076	15' SIDERAIL LINK	81076	105.8 lb	1
	6	81283X318	METRIC BOLT-ON SUITCASE HANDLE	81283X318	51.0 lb	2
	2	4000511	30"BW CURVE CIA	4000511	173.8 lb	3
	1	4000526	7250'-17250' 30"BW H-D ASSY	4000526	78.7 lb	4
	1	81079X1	HD 30" RETURN ROLLER	81079X1	35.1 lb	5
	2	81080	RETURN ROLL BRACKET	81080	3.6 lb	6
	8	80233	M12 J-BOLT	80233	1.6 lb	7
	8	80234	M12 LOOP NUT	80234	0.8 lb	8
	2	80505	JOINT PIN	80505	0.2 lb	9
	2	80504	HITCH PIN CLIP	80504	0.2 lb	10
1	2	81082X10	M12 U-BOLT FOR 50X70 SIDERAIL	81082-10	0.4 lb	11
1	4	A22158-4	WASHER, HD NW, OD M12	A22158	0.1 lb	12
1	4	A82384-4	M12, WASHER, LOCK	A82384	0.1 lb	13
1	4	A22154-45	NUT, M12, G8	A22154	0.1 lb	14

NOTES:

1. MARK ROBBINS PART NUMBERS ON LOOSE PARTS WITH PAINT PEN OR EQUIVALENT TO FACILITATE ASSEMBLY AT JOBSITE. (THIS DOES NOT INCLUDE FASTENER TYPE ITEMS 7 THRU 10)

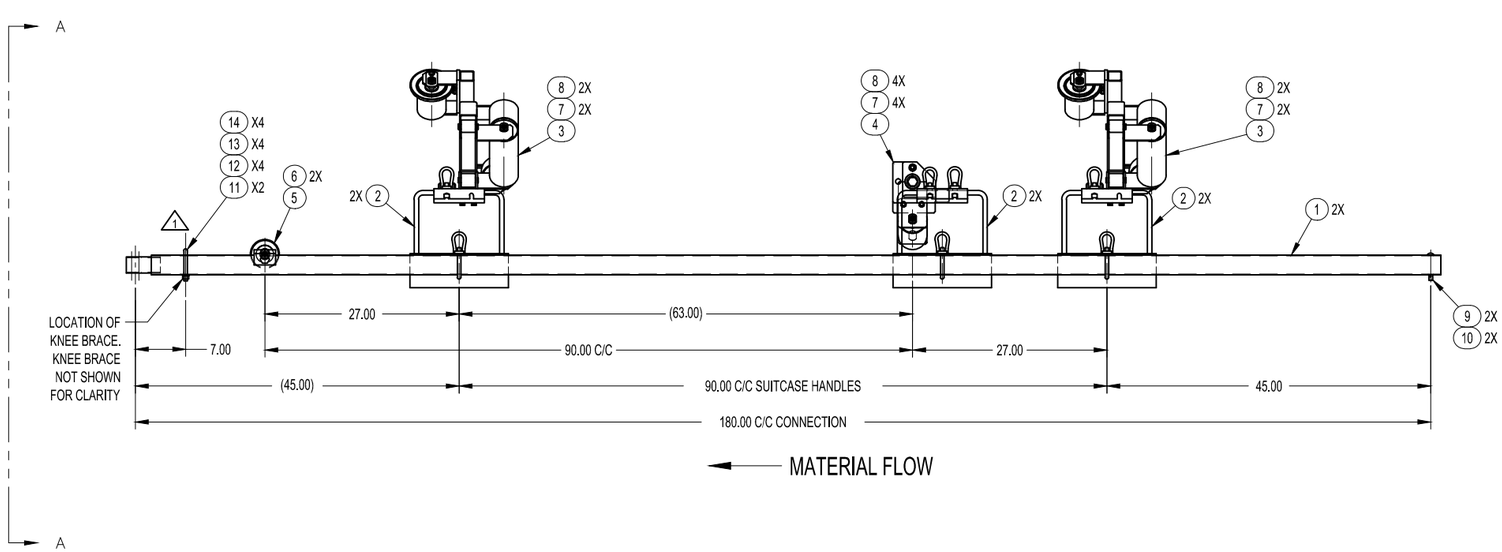

1046683

REV	DESCRIPTION	REV'D BY/ DATE	APP'D BY/ DATE
1	ADDED M12 U-BOLT AND HARDWARE AND UPDATED BOM	AWB 10/3/12	C. BESS 10/3/12

MACHINE	NEXT ASSY
S.F. BAY	1049679

UNLESS NOTED ALL DIMS ARE inch
TOLERANCES UNLESS NOTED
0 - 1" ± 1/16 FRACTIONS 1/16
1" - 5' ± 1/8 .X ± .03
5' - 20' ± 1/4 .XX ± .015
20' + ± 1/2 .XXX ± .005
ANGLES ± 1
SURFACE 250
THIRD ANGLE PROJECTION
DIMENSIONS (X) ARE REFERENCE
ALL GEOMETRIC DIMENSIONING & TOLERANCING PER ANSI Y14.5-2009

TITLE
30"BW 7250'-17250' RADIUS CURVE STRUCTURE ASSEMBLY

SIZE D | DWG No. 1046683 | REV 1 | SHT 1 OF 1 | SCALE 1:10 | DO NOT SCALE

DRAWN BY J.SLEDD | DATE 3/12/2012 | CHECKED BY/ MANAGER C.BESS | CHECKED BY/ MAN C.BESS

WEIGHT TOTAL 452.8 lb | APPROVED BY T.BESS | DATE 6/6/2012

Robbins

www.TheRobbinsCompany.com

PROPRIETARY NOTICE
The information disclosed herein is the sole property of The Robbins Company and remains the sole property, it will not be duplicated in full or part, used by or disclosed to any other person or any other consent of The Robbins Company. By accepting this information, recipient agrees to advise the Robbins Company without any modification, whatsoever to the conditions. This material is on loan only, and is to be returned upon request to The Robbins Company.

SECTION A–A

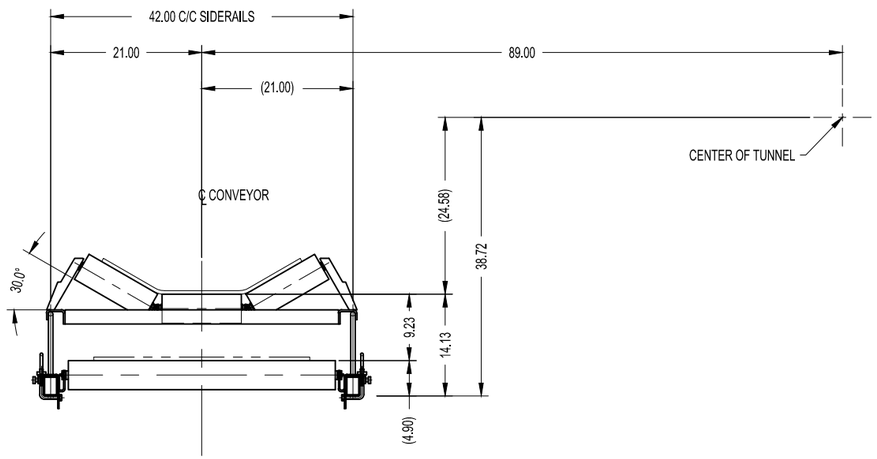

QTY	PART No.	DESCRIPTION	DWG No.	WT. Total	ITEM
2	81076	15' SIDERAIL LINK	81076	105.8 lb	1
4	81283X318	METRIC BOLT-ON SUITCASE HANDLE	81283X318	34.0 lb	2
2	81074	30"BW INLINE CARRYING IDLER ASSY	81074	101.0 lb	3
1	D81747-2	30" CEMA-C RETURN ROLL	D81747-2	30.5 lb	4
2	81080	RETURN ROLL BRACKET	81080	3.6 lb	5
4	80233	M12 J-BOLT	80233	0.8 lb	6
4	80234	M12 LOOP NUT	80234	0.4 lb	7
2	80505	JOINT PIN	80505	0.2 lb	8
2	80504	HITCH PIN CLIP	80504	0.2 lb	9
2 △2	81082X10	M12 U-BOLT FOR 50X70 SIDERAIL	81082-10	0.4 lb	10
4 △2	A22158-4	WASHER, HD NW, OD M12	A22158	0.1 lb	11
4 △2	A82384-4	M12, WASHER, LOCK	A82384	0.1 lb	12
4 △2	A22154-45	NUT, M12, G8	A22154	0.1 lb	13

NOTES:

1. MARK ROBBINS PART NUMBERS ON LOOSE PARTS WITH PAINT PEN OR EQUIVALENT TO FACILITATE ASSEMBLY AT JOBSITE. (THIS DOES NOT INCLUDE FASTENER TYPE ITEMS 6 THRU 9)

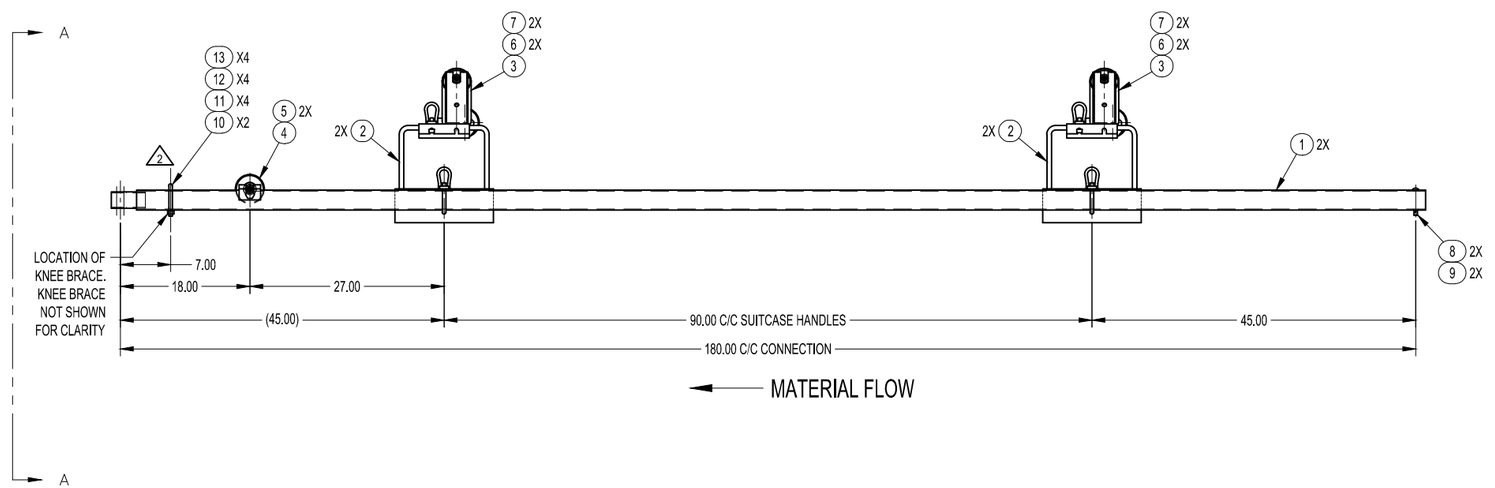

REV	DESCRIPTION	REVD BY/ DATE	APP'D BY/ DATE
2	ADDED M12 U-BOLT AND HARDWARE AND UPDATED BOM	AWB 10/3/12	C. BESS 10/3/12
1	REMOVED UNNECASSARY DIMENSIONS	JWS 8/30/12	CHB 8/30/12

TITLE: 30"BW TYPICAL STRUCTURE ASSEMBLY

MACHINE	NEXT ASSY
S.F. BAY	1046679

UNLESS NOTED ALL DIMS ARE inch
TOLERANCES UNLESS NOTED
0 - 1' ± 1/16 | 1' - 5' ± 1/8 | 5' - 20' ± 1/4 | 20' ± 1/2
FRACTION ± 1/16 | .X ± .03 | .XX ± .015 | .XXX ± .005 | ANGLES ± 1° | SURFACE 250
MACHINING (CUTS)
3RD ANGLE PROJECTION
DIMENSIONS IN ARE REFERENCE
ALL GEOMETRIC DIMENSIONING & TOLERANCING PER ANSI Y14.5-2009

SIZE D | DWG NO. 1046678 | REV 2 | SHT 1 OF 1 | SCALE 1:10 | DO NOT SCALE

DRAWN BY J.SLEDD | DATE 3/12/2012 | CHECKED BY/ADDRESS C.BESS | CHECKED BY/DATA C.BESS | APPROVED BY T.BESS | DATE 6/6/2012 | WEIGHT TOTAL 278.5 lb

Robbins

www.TheRobbinsCompany.com

1046678

PROPRIETARY NOTICE
The information disclosed hereon, is the sole property of The Robbins Company and is not to be used, copied, or disclosed for the duplication in full or part, used for, or disclosed to any person, firm or corporation for any purpose whatsoever without the written permission of The Robbins Company. By accepting this information, recipient agrees to indemnify and hold harmless The Robbins Company for any unauthorized use of the information. This material is confidential and subject to the conditions, limitations and restrictions set forth in the Non-Disclosure Agreement between The Robbins Company and the recipient.

QTY	PART No.	DESCRIPTION	DWG No.	WT. Total	ITEM
1	1049364-1	SEE DETAIL ON DRAWING	1049364	7.6 KG	1
1	1049364-2	SEE DETAIL ON DRAWING	1049364	6.6 KG	2
2	1049364-3	SEE DETAIL ON DRAWING	1049364	2.5 KG	3
2	81082X10	M12 U-BOLT FOR 50X70 SIDERAIL	81082	-	4
4	A22158-4	WASHER, HD NW OD M12	A22158	-	5
4	A22159-4	WASHER, LOCK M12	A22159	-	6
4	A22154-45	NUT, M12 G8	A22154	-	7

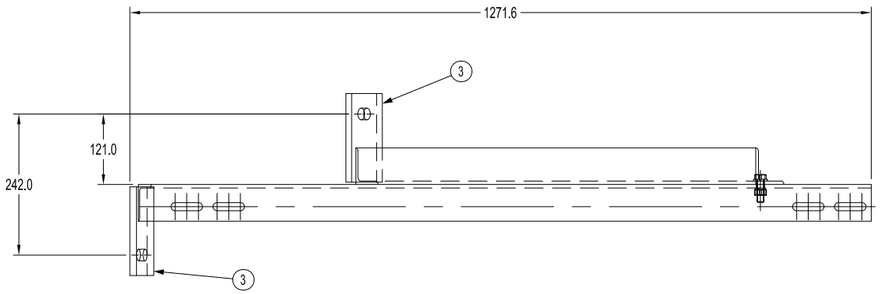

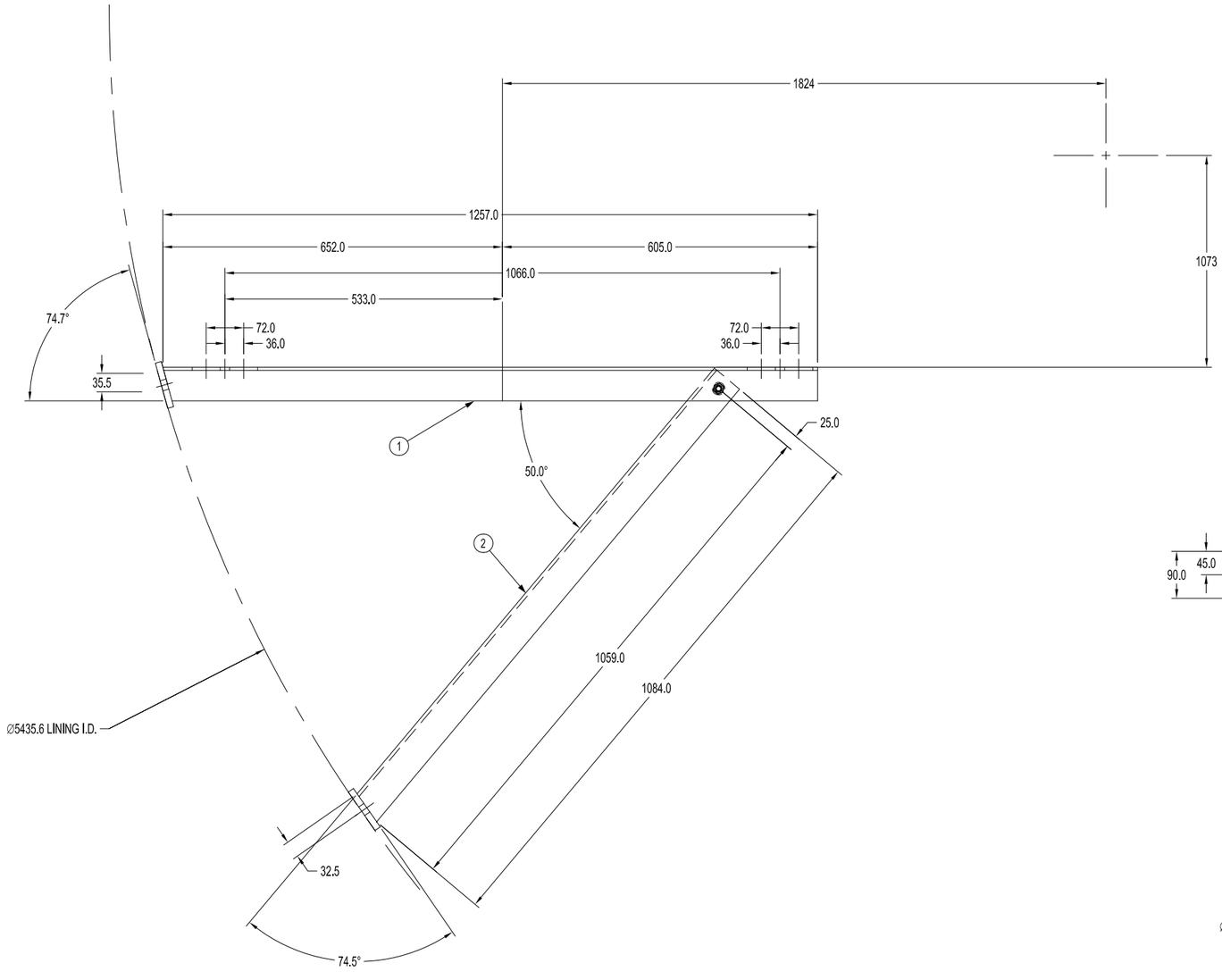

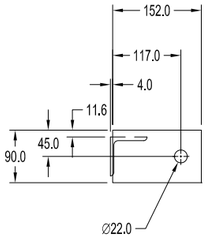

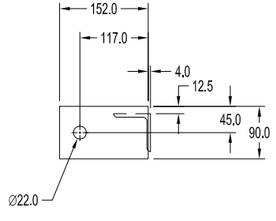

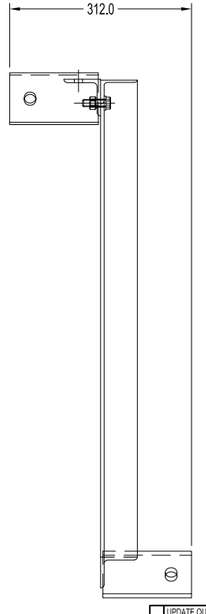

NOTES:

1. REMOVE ALL BURRS & BREAK SHARP EDGES.

2. ALL WELDS TO BE 6MM CONTINUOUS FILLET UNLESS NOTED OTHERWISE.

3. ALL WELDING SHALL MEET THE REQUIREMENTS OF THE LATEST EDITION OF THE AWS STRUCTURAL WELDING CODE - ALL SECTIONS AS APPLICABLE UNLESS OTHERWISE NOTED. USE E70XX LOW HYDROGEN ELECTRODES OR EQUIVALENT.

4. PAINT PER ORDER SPECIFICATIONS. MACHINED SURFACES NOT TO BE PAINTED BUT PROTECTED BY OTHER SUITABLE METHODS.

5. STEEL STAMP OR ELECTRO-ETCH PART NUMBER, P.O. NUMBER & VENDOR I.D. CODE ON PART WITH 10MM MIN CHARACTERS.

6. DO NOT WELD ITEM 1 TO ITEM 2.

REV	DESCRIPTION	REV'D BY/ DATE	APP'D BY/ DATE
1	UPDATE QUANTITIES ITEMS 4-7 UPDATE ITEM 4 P/N	JJC 9/29/2012	C.BESS

PROPRIETARY NOTICE
This information is the property of The Robbins Company, and remains their property. It shall not be used, reproduced, or disclosed to others for any purpose, without prior written consent of The Robbins Company. Any such reproduction must contain this statement in full with this notice. Without any modification. Use of this information by the recipient is subject to such terms as to be ordained upon request by The Robbins Company.

MACHINE	NEXT ASSY
S.F. SUBWAY	

UNLESS NOTED ALL DIMS ARE mm
TOLERANCES UNLESS NOTED

FASTENERS	MACHINING mm	
0-300 ± .5	X ± .5	
300-1500 ± 3	X.X ± 1.0	
1500-6000 ± 6	X.XX ± .40	
6000+ ± 12	X.XXX ± .100	
	ANGLES ± 1°	
WELDING PROCEDURE	SURFACE FINISH	

DIMENSIONS IN ARE REFERENCE
ALL GEOMETRIC DIMENSIONING & TOLERANCING PER ANSI Y14.5-2009

30"BW KNEE BRACE ASSEMBLY

SIZE	DWG No.	REV	SHT 1 OF 2	SCALE
D	1049364	1		1:5 DO NOT SCALE

DRAWN BY	CHECKED STANDARDS
A.CIPOLLETTI	C.BESS
DATE	CHECKED DESIGN
05/25/2012	C.BESS
WEIGHT TOTAL	APPROVED BY
16.7 KG	T.BESS
	DATE 06/06/2012

Robbins

www.TheRobbinsCompany.com

1049364

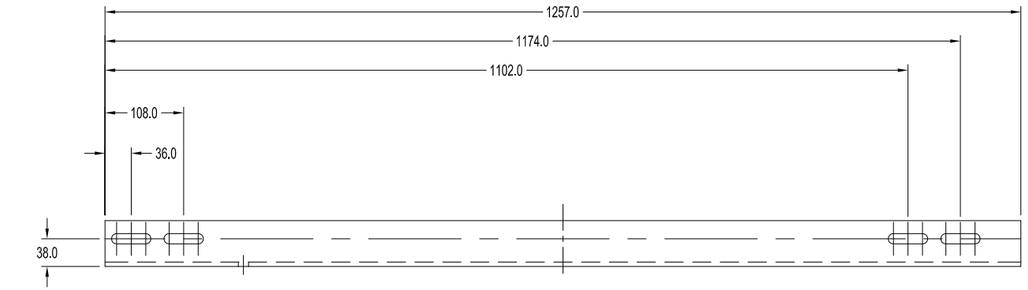

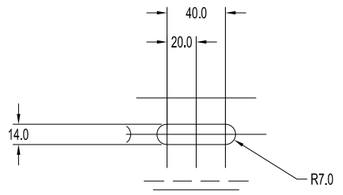

SLOT DETAIL 4X

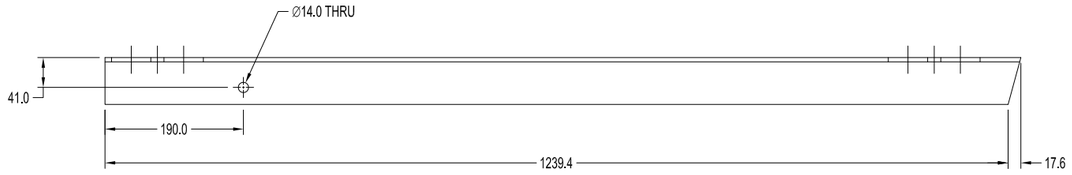

1049364-1, ASTM A36 ANGLE

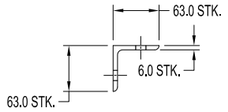

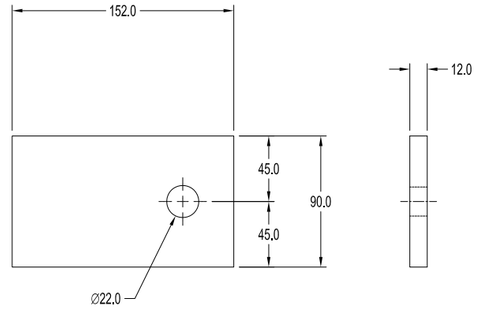

1049364-3, ASTM A36 PLATE
1:2

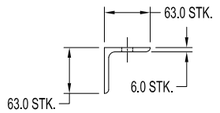

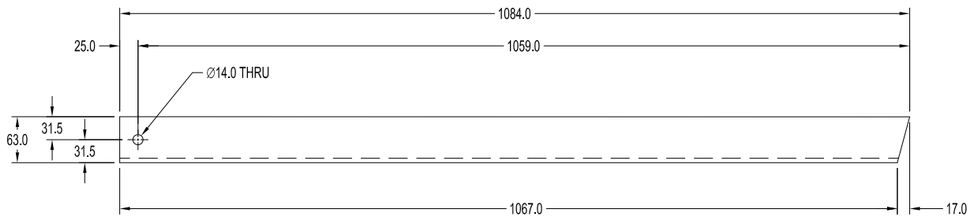

1049364-2, ASTM A36 ANGLE

PROPRIETARY NOTICE:
This information disclosed herein is the property of The Robbins Company, and remains that while property. It shall not be duplicated, used, or disclosed to anyone for any other party without prior written consent of The Robbins Company. Any duplication, modification, distribution, or sale in part or in whole of this design without written permission is strictly prohibited. This drawing and all information contained herein is to be returned upon request to The Robbins Company.

MACHINE	NEXT ASSY	
S.F. SUBWAY		
UNLESS NOTED ALL DIMS ARE mm		
TOLERANCES UNLESS NOTED		
FABRICATION (mm)	0-300 ± 1.5 300-1500 ± 3 1500-6000 ± 6 6000+ ± 12	MACHINING (mm)	X ± 1.5 X.X ± 1.0 X.XX ± .40 X.XXX ± .100 ANGLES ± 1° SURFACE 125
THIRD ANGLE PROJECTION			
DIMENSIONS IN ARE REFERENCE			
ALL GEOMETRIC DIMENSIONING & TOLERANCING PER ANSI Y14.5-2009			

REV	DESCRIPTION	REV'D BY / DATE	APP'D BY / DATE

TITLE: 30"BW KNEE BRACE ASSEMBLY

SIZE: D | DWG NO.: 1049364 | REV: 0 | SHT 2 OF 2 | SCALE: 1:4 | DO NOT SCALE

DRAWN BY: A.CIPOLLETTI | DATE: 05/29/2012 | CHECKED STANDARDS: C.BESS | CHECKED DESIGN: C.BESS

WEIGHT TOTAL: 16.7 KG | APPROVED BY: T.BESS | DATE: 06/06/2012

Robbins

www.TheRobbinsCompany.com

1049364

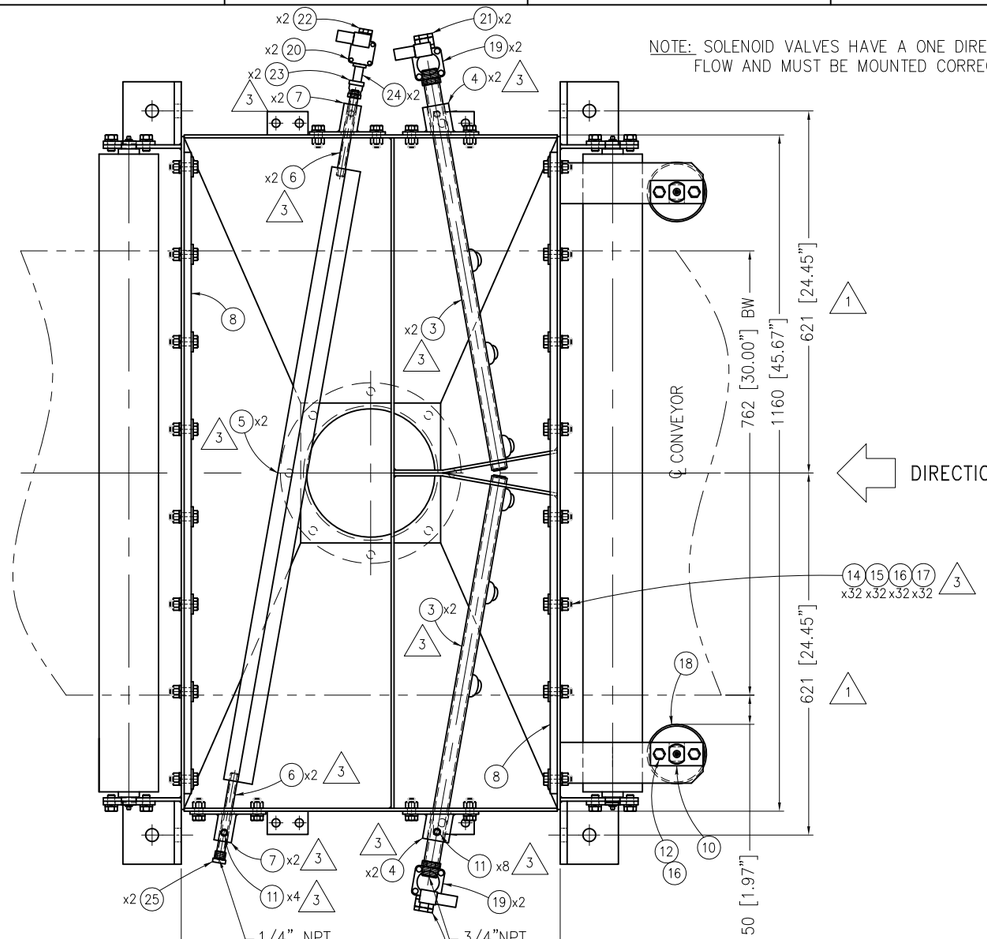

MINIMUM REQUIREMENTS: 24L/min x 6.9bar WATER
3.46M³/min x 5.5bar AIR

6.3gpm x 100psi WATER
122cfm x 80psi AIR

QTY. -1	PART No.	DESCRIPTION	WT. EA. kg	MATERIAL	ITEM
–	D85184-1	762mm BELT WASHING BOX ASSEMBLY	302		1
1	D85185-1	WASH BOX WELDMENT	196		2
4	81341X20	SPRAY BAR & NOZZLE ASSEMBLY	1.6		3
4	C84573-1	SPRAY BAR MTG BKT WELDMENT	0.8		4
2	81342	42" SUPER AIR KNIFE ASSEMBLY	3.5		5
4	81341X21	PIPE NIPPLE, 1/4"NPT x 150mm Lg	0.1	STEEL	6
4	C84574-1	AIR KNIFE MTG BKT WELDMENT	0.8		7
4	B84575-1	RUBBER BELT WIPER	1.3		8
4	D81747-3	ø100mm LONG-SHELL RETURN ROLL	17		9
12	A84576-1	RETURN ROLL KEEPER	0.1		10
12	1000824	SHSS, M12 CUP POINT x 16mm Lg	~	ISO 4029	11
24	A22151-40205	HHCS, M12 x 20mm Lg	~	GRADE 8.8	12
32	A22151-40305	HHCS, M12 x 30mm Lg	~	GRADE 8.8	13
40	A22151-40405	HHCS, M12 x 40mm Lg	~	GRADE 8.8	14
96	A82384-4	LKWR, M12 SPLIT	~		15
32	A22158-4	FLWR, M12 STD	~		16
72	A22154-45	HXNT, M12	~	GRADE 8	17
2	81492X4	ø100mm CIA ROLL (914mm BW)	5.9		18
4	A85679-3	SOLENOID VALVE, 24VDC, NC, 3/4" NPT	~		19
2	A85679-1	SOLENOID VALVE, 24VDC, NC, 3/8" NPT	~		20
4	651-429	3/4" NPT PLUG	~		21
2	651-427	3/8" NPT PLUG	~		22
2	650-589	FITTING, STR 06FP-04FP	~		23
2	662-230	PIPE, SMLS NIP Ø3/8X2-1/2 LG	~		24
2	653-850	1/4" NPT CAP	~		25

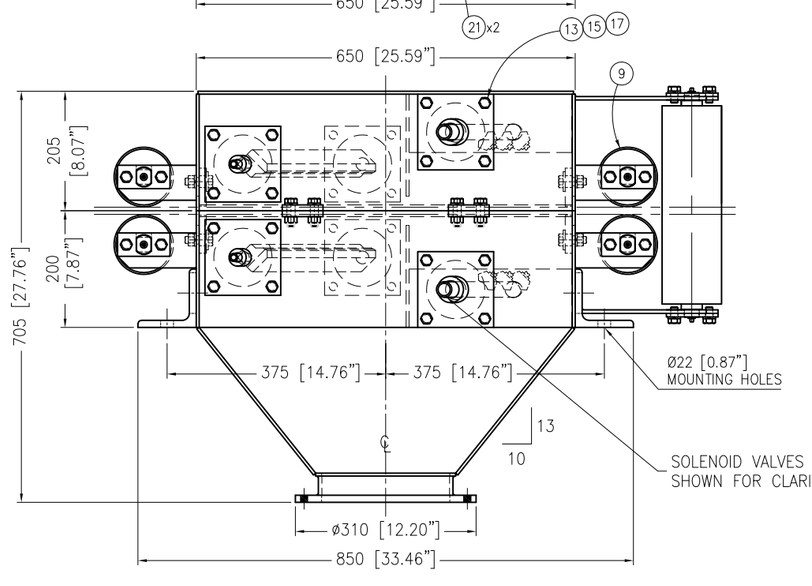

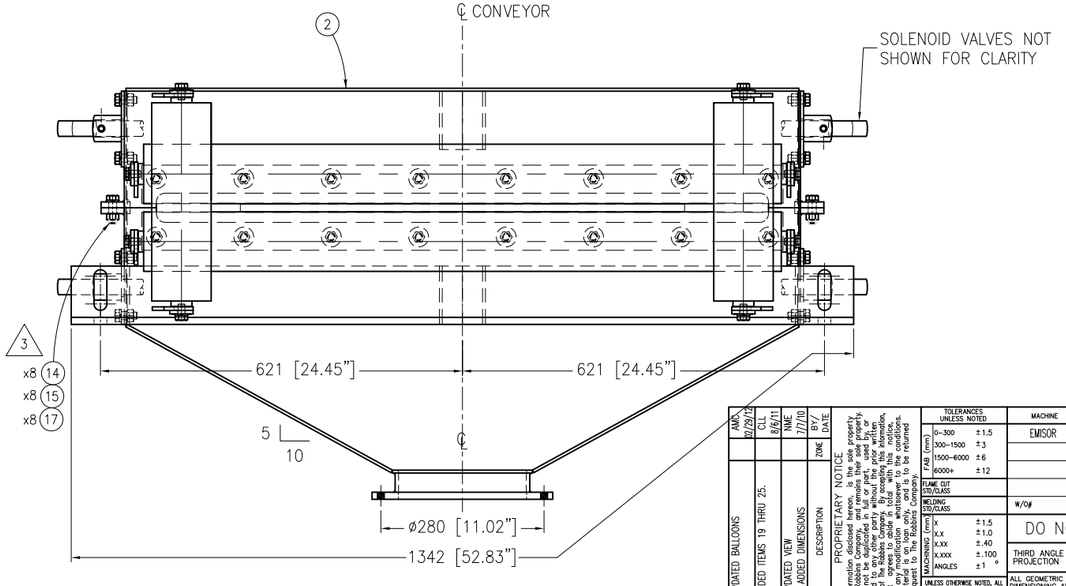

REV	DESCRIPTION	ZONE	DATE	BY
3	UPDATED BALLOONS		02/29/12	CLL
2	ADDED ITEMS 19 THRU 25.		8/6/11	NME
1	UPDATED VIEW & ADDED DIMENSIONS		7/7/10	BY?

PROPRIETARY NOTICE
The information disclosed hereon, is the sole property of The Robbins Company, and remains their sole property. It may not be used, copied or reproduced, or its contents disclosed to any other party without the prior written consent of The Robbins Company. By accepting this drawing, recipient agrees to abide in full with this notice. Without any modification whatsoever to the conditions. This drawing is to be returned upon request to The Robbins Company.

TOLERANCES UNLESS NOTED	
FAB (mm) 0-300	±1.5
300-1500	±3
1500-6000	±6
6000+	±12
FLAME CUT STD/CLASS	
WELDING STD/CLASS	
MACHINING (mm) X	±1.5
X.X	±1.0
X.XX	±.40
X.XXX	±.100
ANGLES	±1 °
UNLESS OTHERWISE NOTED, ALL DIMENSIONS ARE SHOWN IN mm	
MACHINING STD/CLASS	

MACHINE	NEXT ASSY
EMISOR	D85128
W/O#	
DO NOT SCALE	
THIRD ANGLE PROJECTION	
ALL GEOMETRIC DIMENSIONING AND TOLERANCING PER ISO R1101 – 1983	SCALE 1:5
DIMS (X) ARE REF	

TITLE
WASHING BOX ASSEMBLY 762mm CONVEYOR BELT

SIZE D | DWG No D85184 | REV 3 | SHT 1 OF 1 | ORIGIN ☐ Solon ☐ Kent ☐ Oak Hill

DRAWN C.LEGG DATE 10/30/2009 | CHECKED T.BESS DATE 11/13/2009

Robbins
THE ROBBINS COMPANY
29100 Hall Street
Solon, Ohio 44139 USA
Kent, WA:
Phone (253) 872-0500
Fax: (253) 872-0199
Oak Hill, WV:
Phone (304) 465-5880
Fax: (304) 465-5886

D85184

QTY	PART No.	DESCRIPTION	DWG No.	WT. Total	ITEM
4	4001203	BEAM	4001162	174.88 lbm	1
4	4001204	STEEL PIN	4001162	1.51 lbm	2
4	4001205	DISCHARGE BUCKLE	4001162	4.52 lbm	3
4	4001206	DISCHARGE BUCKLE PIN	4001162	1.57 lbm	4
4	4001207	CLAMP	4001162	19.51 lbm	5

NOTES:

1. A PARALLEL POSITION SHOULD BE MAINTAINED BETWEEN THE CLAMP AND BEAM TO PREVENT DAMAGE TO THE ASSEMBLY.
2. TEETH ON BEAMS SHOULD FULLY CONTACT THE BELT SURFACE.
3. SIMULTANEOUSLY OPERATE BOTH TENSIONING DEVICES TO ENSURE THAT THE BELT WILL MOVE TO THE REQUIRED POSITION BY THE PULL FUNCTION.

TRC P/N 4001162
36" MOBILE BELT CLAMP
1:4

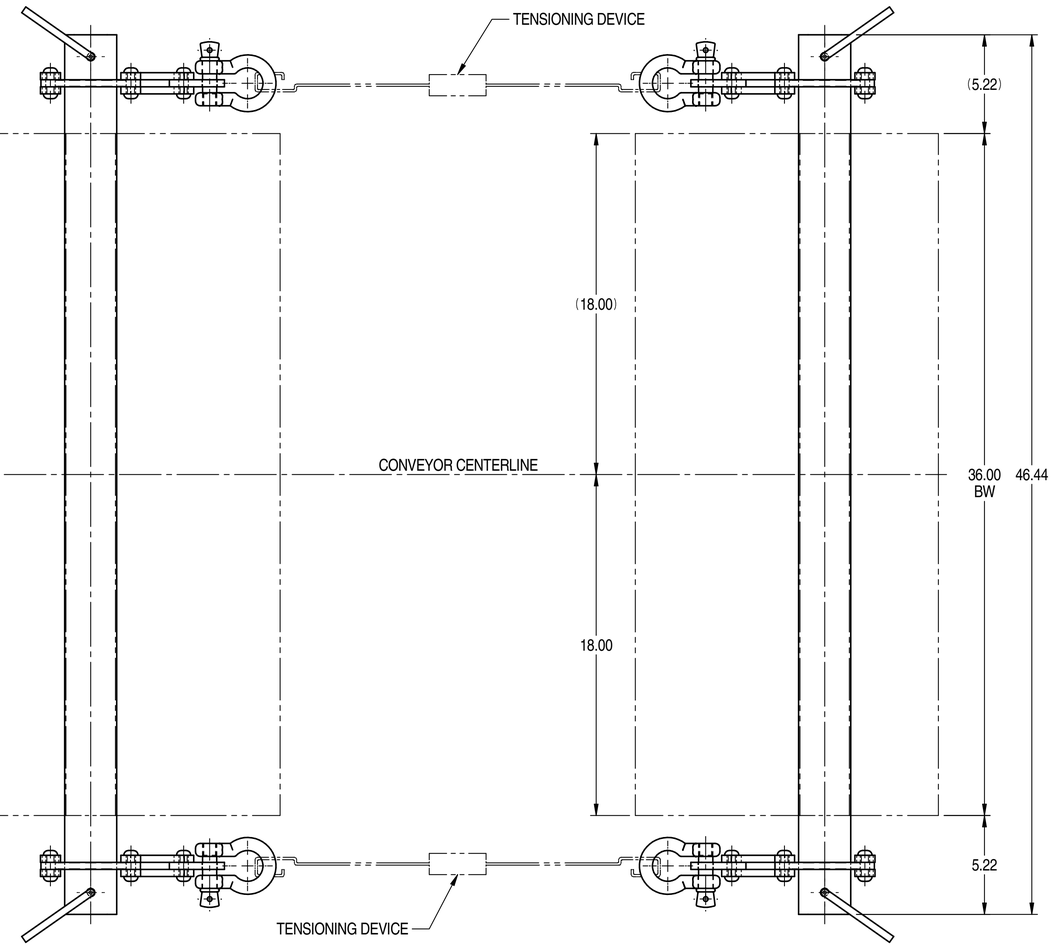

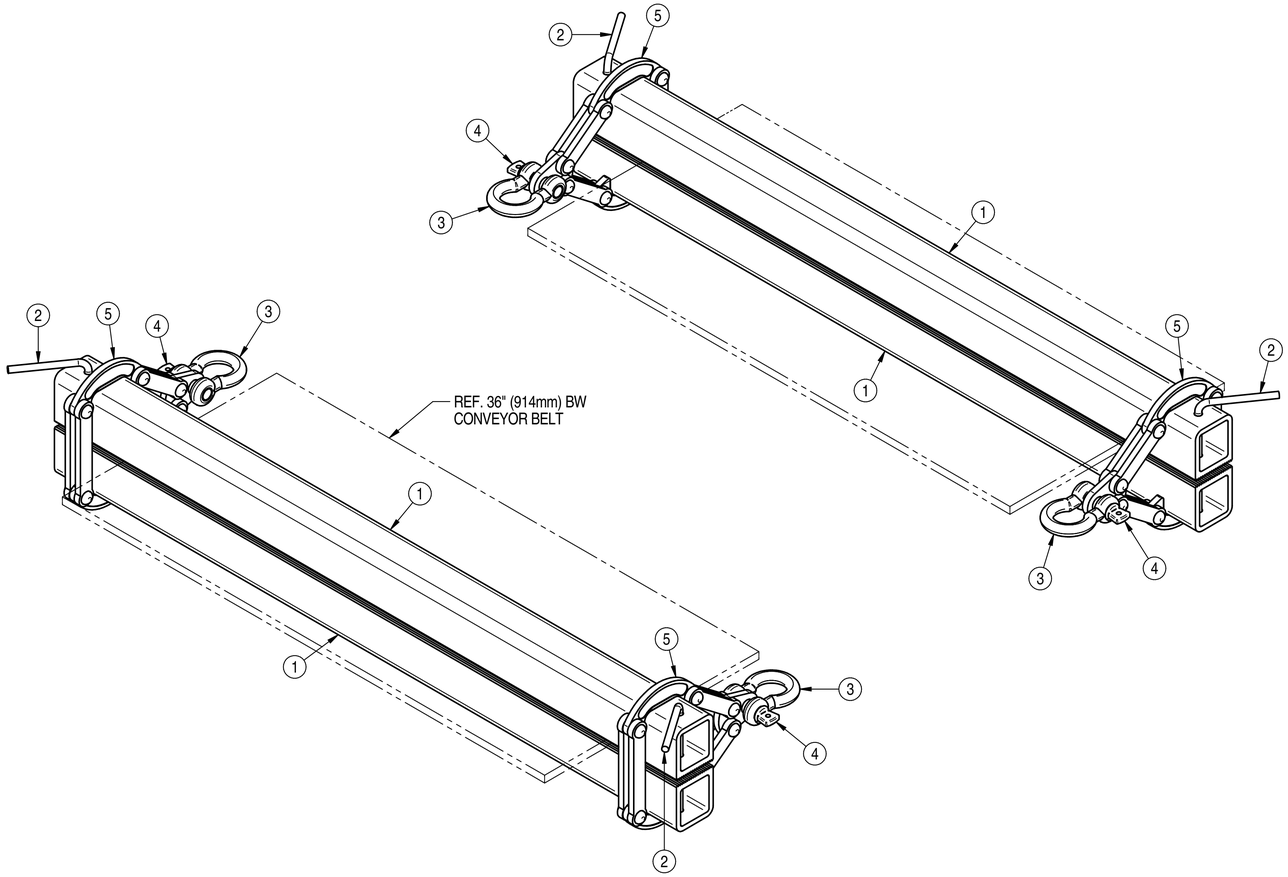

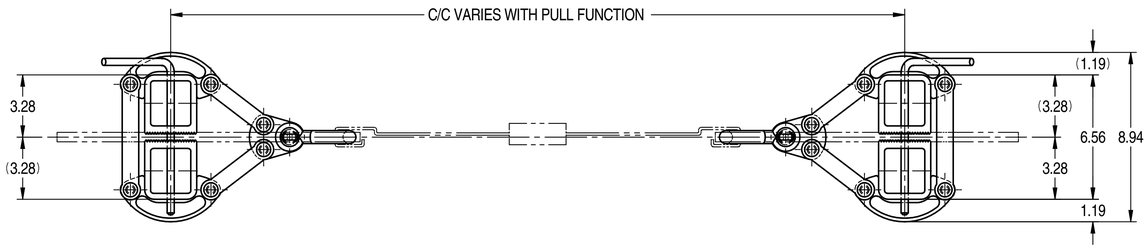

4001162

MACHINE	NEXT ASSY
EMISOR	D85527

UNLESS NOTED ALL DIMS ARE inch

TOLERANCES UNLESS NOTED

FAB (in)	MACHINING (in)	
0 - 1'	±1/16	FRACTION ±1/16
1' - 5'	±1/8	X.X ±.03
5' - 20'	±1/4	X.XX ±.015
20' +	±1/2	X.XXX ±.005
		ANGLES ±1°
		SURFACE FINISH 125

DIMENSIONS (X) ARE REF

ALL GEOMETRIC DIMENSIONING & TOLERANCING PER ANSI Y14.5M-1982 AS APPLICABLE.

TITLE: 36" MOBILE BELT CLAMP

SIZE: D | DWG No.: 4001162 | REV: 1 | SHT 1 OF 1 | SCALE: SEE DETAIL - DO NOT SCALE

DRAWN: C.LEGG DATE: 02/16/2010 | CHECKED: T.BESS DATE: 02/16/2010

THIRD ANGLE PROJECTION | APPROVED: T.BESS DATE: 02/16/2010

WEIGHT TOTAL: 201.96 lbm

Robbins

REV	DESCRIPTION	BY/DATE
1	NEXT ASSY WAS D85128.	CLL 07/16/10

PROPRIETARY NOTICE
The information disclosed herein, is the sole property of The Robbins Company, and remains their sole property. It shall not be duplicated in full or part, used by, or disclosed to any other party without prior written consent of The Robbins Company. By accepting this information, recipient agrees to abide in total with this notice, without any modification whatsoever to the conditions. This material is on loan only, and is to be returned upon request to The Robbins Company.

Overland Conveyor

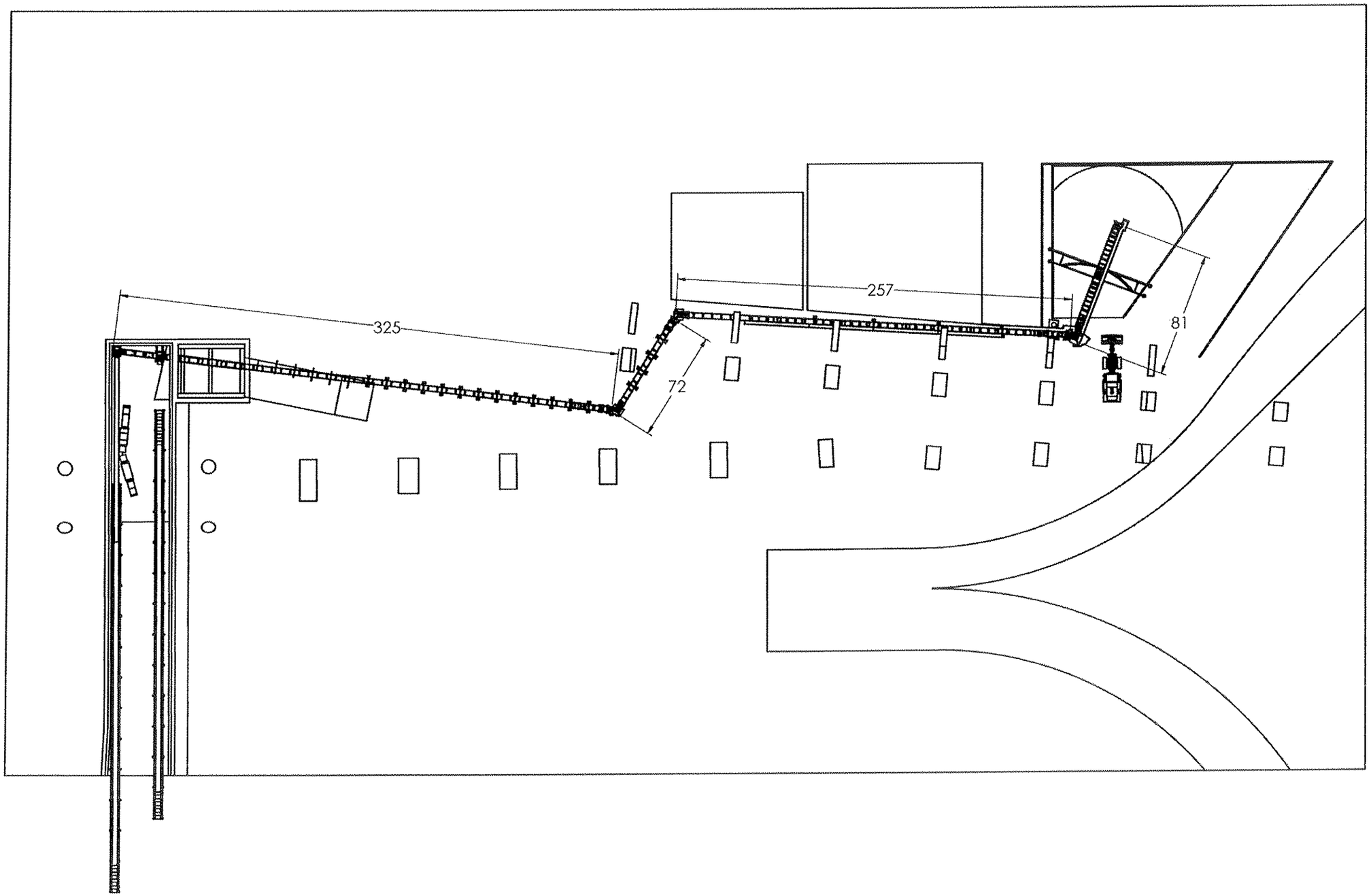

Volume measurement systems

In order to minimize ground settlement during excavation, it is essential to balance the amount of material that is removed with the theoretical amount of ground that is displaced by the machine. If too much or too little material is removed, excessive settlement or heaving can occur. Several tools have been supplied with the machines that assist the operator in controlling the amount of material that is removed from the machine. These tools consist of a radar volume measurement system, two belt conveyor scales, and screw conveyor speed sensor. It is important to note that these tools are not fool proof. These tools require a skilled operator to provide the proper inputs based on ground conditions, and be able to properly analyze the results. With the operator inputs carefully determined, the PLC displays the reading for the theoretical discharge rate based on the thrust speed, and also the comparative measured rates for the systems described below. The PLC will display a visual warning in the event that there is more than 25% difference from the theoretical discharge rate.

Radar Volume Measurement System - This system uses two radars to measure the profile of the material that is being transported on the belt conveyor. The measured profile is compared with the profile of the empty belt that is established during calibration to measure the instantaneous volume profile of material. This profile is multiplied by the speed of the belt to get a volumetric discharge rate.

Belt Scale – This system works similar to the volume measurement system, but measures in weight per time. The scale is directly connected to a set of carrier rollers that are positioned underneath the conveyor belt, and is calibrated to weigh the amount of material that is being transferred by the conveyor belt. This weight per time measurement is converted to a volumetric discharge rate by dividing it by the density of the material. The operator must determine the density of the ground based on the actual ground conditions and the amount and type of ground conditioning agents being used.

Screw speed sensor – The volume excavation rate is generally proportional to the screw conveyor rotational speed. However, several factors affect the efficiency of the screw such as soil properties, conditioning agents used, and ground pressure. Along with an estimated efficiency rate for the current conditions, the screw speed can be used to calculate the volumetric discharge rate.

Volume Measurement Operation Screen

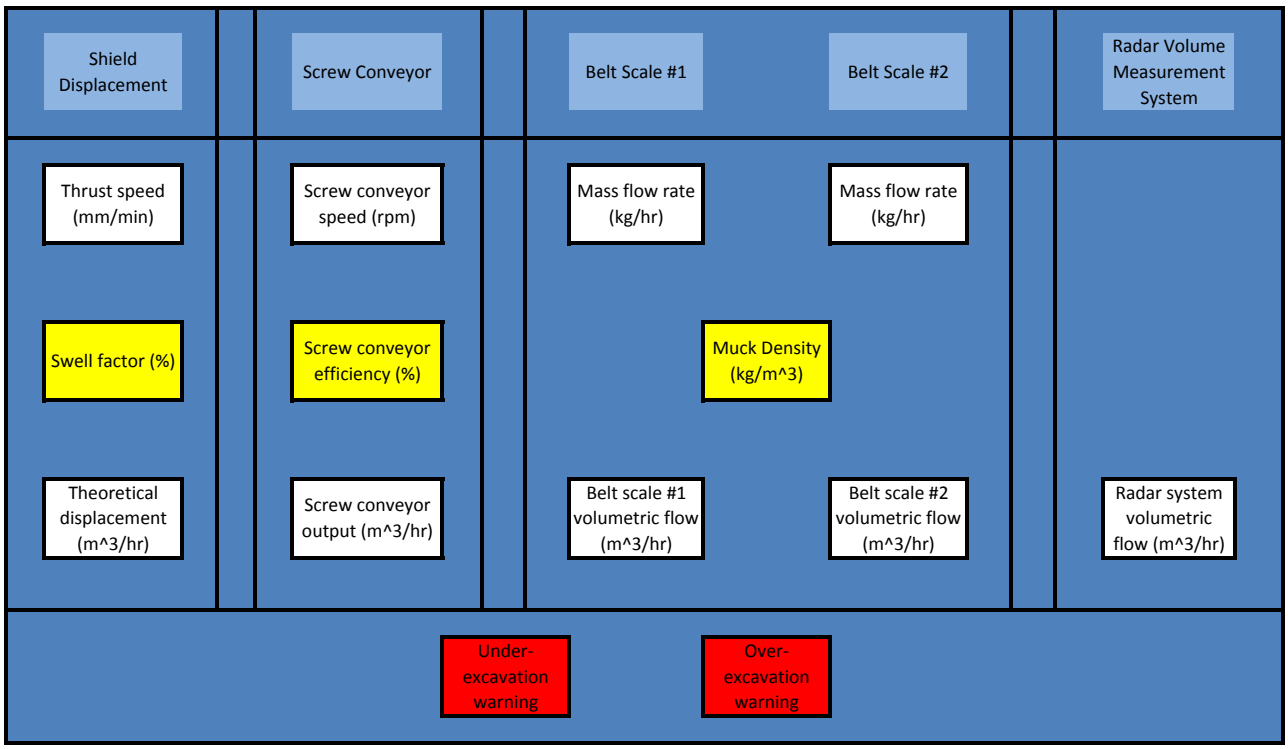

= Operator input values based on ground conditions

1. Executive Summary. Your Solution: iBelt™

iBelt is a performance and high reliability solution to measure the volume flow on conveyor belts. It is suited to be applied within a Tunneling Machine to be used as Volume Measurement System Robbins Part Number 1049223.

The iBelt Solution will consist out of 2x iDRR Sensors, Calibration Roll and iBelt Software. The solution for the Tunneling machine is a custom made solution for Robbinstbm.

indurad confirms the Profibus Interface specification with Volume flow (m^3/hr) and Total Volume since last Reset (m^3). The iRPU will receive a Belt running singnal (1/0) and a Counter reset Signal (1/0). indurad will supply a Profibus GSD File.

A well summary of the Solution can be found in the indurad iBelt Product Brochure (4 pages). A small demo video of the iWEB interface will give some impression as well:

http://www.youtube.com/watch?v=VSXV9bZ-hmk

2. Advantage: iBelt™

With the iBelt™ Solution indurad offers a unique radar based solution. Currently indurad is the only supplier of 2D radar scanners on the market, capturing the belt load at a rate of 15Hz (at full 2D Profile). The advantages of this approach can be summed up as follows:

- *Robust:* No influence through dust, rain, snow, steam, temperature or wind on measurement results
- *Direct volumetric measurement* important for stockpile and bin dumping control without overload
- *Easy to install*, can be integrated into existing structures (hardware, software)
- *Compact*, scanner + processing unit + software in one IP 66 housing
- *Easy access,* via Webserver or other interfaces
- *For high volume flows,* up to 20.000t/h
- *For narrow and wide conveyors* from 0,6m up to 3 m width
- *Independent on belt wear and vibration* compared to weight cells
- *High accuracy,* through high sampling rate of 15 Hz
- *Instant on-the-spot application,* directly applicable at transfer points
- *Single auto calibration, m*erely one initial parameterization required
- *Safe* - no precautions necessary

Technology Comparison

Conveyor belt volume scanners are commonly determined using laser scanners, weight cell based belt scales or nuclear based bulk flow meters. However, these systems hold some relevant disadvantages:

- *Laser scanners are sensitive to weather conditions:* Dust, rain, mist, snow and steam inhibit consistent measurements. These measurement errors cause excessive volume flow rates
- *Belt weights require frequent calibration.* Load cells or strain gauges have to be mechanically integrated in a time-consuming procedure. Also they have to be recalibrated on a regular basis. Even sophisticated and well serviced systems yield measurement errors of 5-10%
- *Radioactive measurements are expensive and complex* (transportation, radiation protection, complex hardware etc.)
-

Radar vs. Laser - A Practical Comparison

Together with one if it's customers and the RWTH Aachen University indurad performed a field test and compared a laser volume scanner to the iBelt™. The results can be summarized as follows:

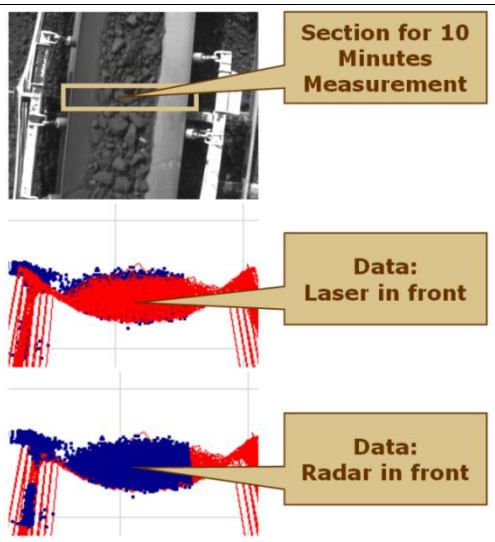

A Belt section has been scanned with radar (blue) and laser (red). The overlay over ten minutes shows the high data quality and comparable precision of both measurements.

Laser scanners (e.g. Sick or Riegl) deliver accurate measurements, comparable to radar.

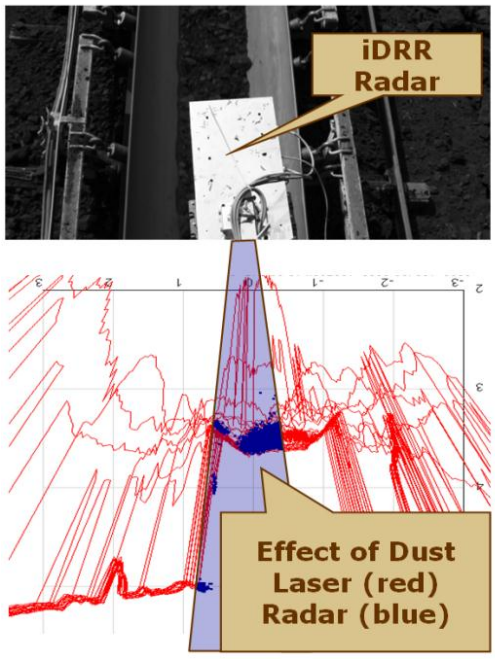	As expected, Dust, Rain, Fog, Snow change the behavior of the laser detection. The laser starts detecting the nearest object – being the surface of the dust, fog, raindrops, snowflakes etc. This figure was created while some dust was in the air. While the laser (red) scans the surface of the dust the radar detects the exact loading of the belt (blue). In daily operations the misinterpretation of the laser leads to several problems in operations and accounting. Also the vapors, caused by emitting moisture form the coal / ore (e.g. in the early morning shifts) cause wrong measurements by laser scanners.
	Picture left shows a blockage test performed by indurad's customer. Even the mixture of coal, mud, sand and water could not block the signal.

Technical insights

Thanks to different wavelengths of laser light (approx. 1µm) and radar (4mm), the impact of environmental conditions on the quality of the radar measurements are minimal. While the radar "over looks" smallest particles, laser light reflects on dust and fog, leading to a dispersion of the laserlight. Laser, other than radar, cannot detect objects "lying behind" the dust or fog curtain. The following figure visualizes the differences:

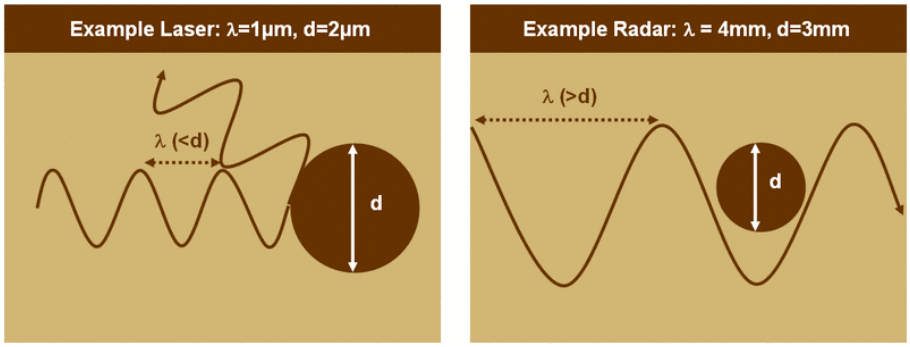

Another disadvantage is that the laser has moving parts – after some time they do not withstand the tough environmental conditions like shocks, vibration etc.

3. Our solution for your mission: iBelt™

The equested iBelt™ Solution consists of both hardware and software components.

indurad will deliver, based on the technical discussions with Jesse Heineman of Robbins USA a combined version of two iBelts that work together:

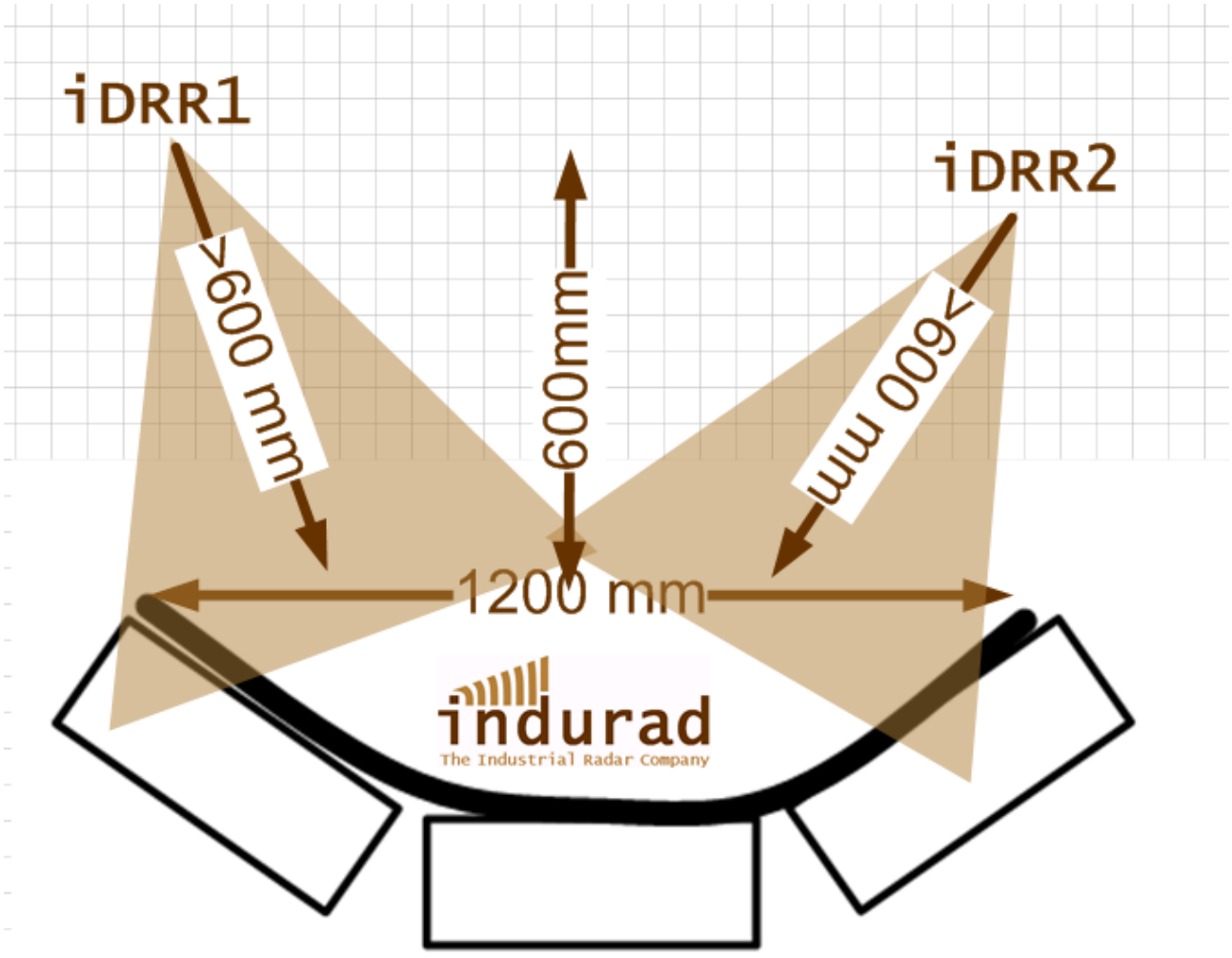

As discussed indurad will deliver 2x iDRR embedded with specifically drilled holes in order to let purge air flow into the housing – due to requirements defined by Jesse Heinemann of Robbinstbm.

NOTE: The purge air boxes are not scope of supply but will be designed and manufactured/purchased by Robbins. Indurad delivers sensors without any ATEX / Ex Certification.

iBelt Hardware

indurad will use 2x the iDRRembedded Sensor to measure the belt volume flow.

iDRR+iRPUembedded

This 7kg unit has a size of 303x132x126 and contains both iDRR and iRPU in one single casing and contains a second chamber for cramp connections. Optionally an integrated camera, WLAN or 3G is available.

The hardware part of the solution will consist of two housings.

The specialized Robbinstbm Version will be equipped with vent holes.

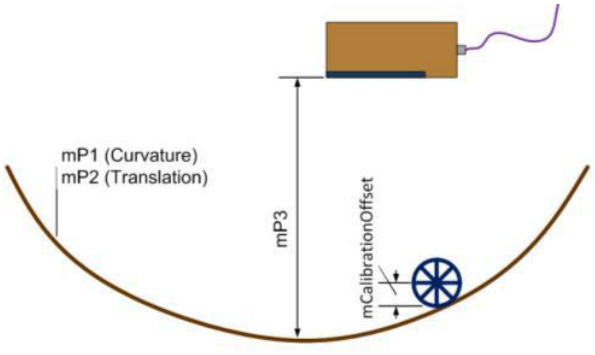

iBelt™ Calibration Roll

is used to retrace the surface contour (shape) of the belt (lower contour of the grey area) to define when the belt is empty. The calibration roll is a high backscatter radar reflector, which can be precisely located from the unit.

ITEM	PART NO	QTY	DESCRIPTION	DWG NO/SPEC

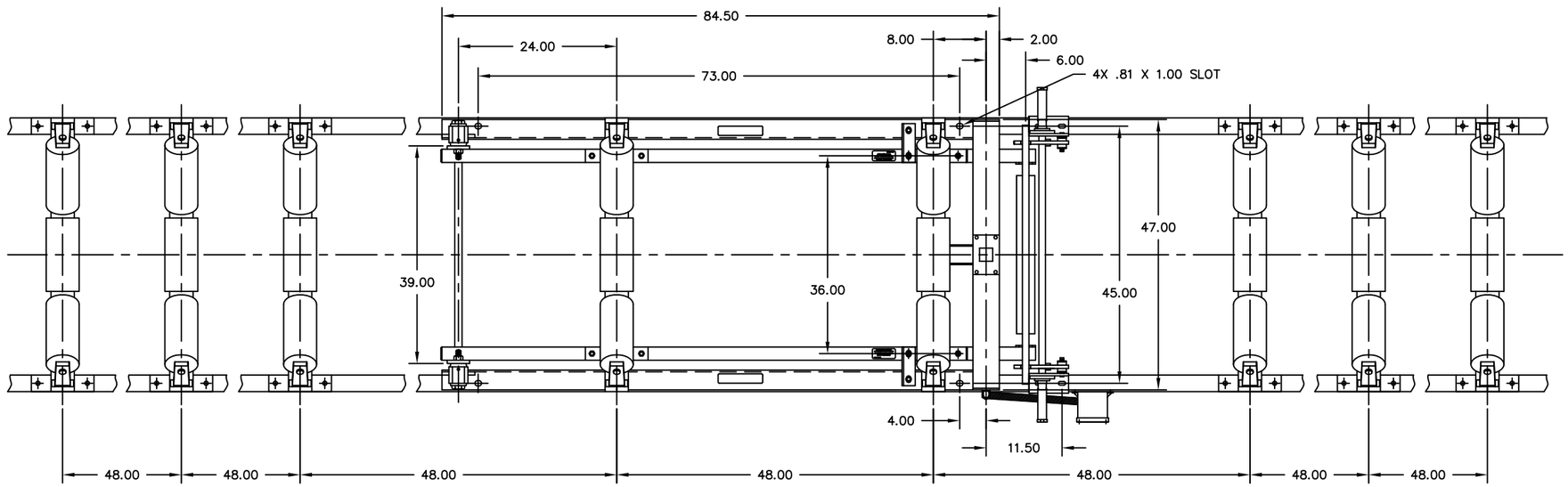

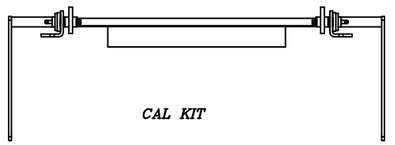

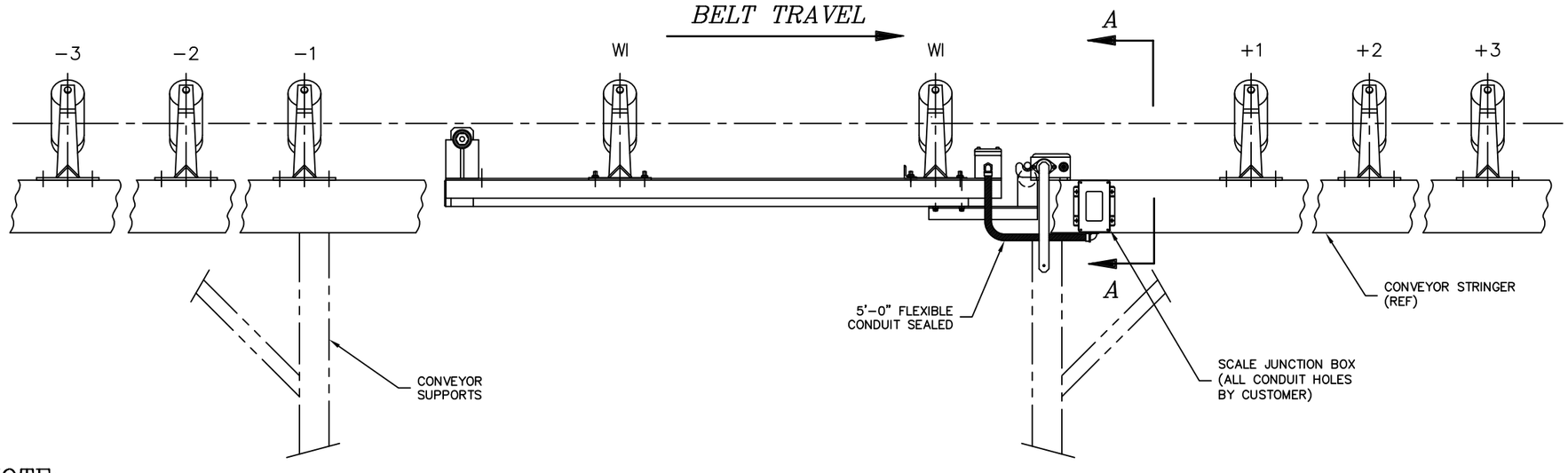

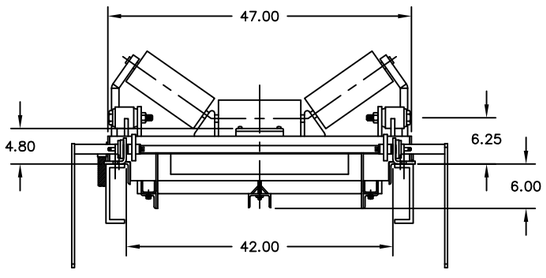

VIEW A − A

NOTE:

1. CONVEYOR SCALE ASSEMBLY SHIPPED COMPLETE WITHOUT WEIGH IDLER ATTACHED. SECURE ASSEMBLY TO STRINGERS WITH FOUR 1/2−13NC BOLTS.
2. IF THE SCALE IS LOCATED WITHIN 30'−0" OF THE HEAD PULLEY THE CROWN OF THE HEAD PULLEY CANNOT BE ABOVE THE TOP OF THE CARRY ROLLS.
3. A MINIMUM 8" CLEARANCE MUST BE ALLOWED BETWEEN RETURN BELT & TOP OF CONVEYOR STRINGER.
4. ALL IDLERS FROM +3 TO −3 MUST BE ALIGNED IN ACCORDANCE WITH INSTRUCTION MANUAL.
5. ALL IDLERS FROM +3 TO −3 MUST BE SHIMMED AS NECESSARY TO SAME PLANE 1/4" ABOVE BELT LINE.
6. ALL WIRING MUST BE DONE IN ACCORDANCE TO N.E.C. & INSTRUCTION MANUAL.
7. MECHANICAL TOLERANCE ON ALL DIMENSIONS ± 1/32"
8. DO NOT ALTER LOADCELL CABLE − EXCESS CABLE TO BE STORED IN BRIDGE ASSEMBLY.

FOR APPROVAL ONLY

CADD DATABASE: AUTOCAD

REV	ECO NO	MICRO	DESCRIPTION	DATE	BY / APPD
A			RELEASED	6/17/12	KIM / KIM

DO NOT SCALE DWG REMOVE ALL BURRS AND UNNECESSARY SHARP EDGES	SCALE N/A		
	JOB NO C551554		
TOLERANCE UNLESS SPECIFIED OTHERWISE X ± 1 ± .5 mm .X ± .06 ± 1.5 mm .XX ± .03 ± .76 mm .XXX ± .010 ± .254 mm FRACT. ± 1/16 ± N/A ANGLES ± 1/2° ± 1/2°	ENG KIM	DATE 6/17/12	
	DWN KIM	DATE 6/17/12	
	CHK KIM	DATE 6/17/12	
NEXT ASS'Y			
CUST ORDER NO 16048			
CUSTOMER LOCATION	THE ROBBINS CO. SOLON, OH		
USER LOCATION			

Derived From D07368A−C015

This document is confidential and is the property of Thermo Fisher Scientific. It may not be copied or reproduced in any way without the expressed written consent of Thermo Fisher Scientific. This document also is an unpublished work of Thermo Fisher Scientific. Thermo Fisher Scientific intends to and is maintaining this work as confidential information. Thermo Fisher Scientific also may seek to protect this work as an unpublished copyright. In the event of either inadvertent or deliberate publication, Thermo Fisher Scientific intends to enforce it's right to this work under the copyright laws as a published work. Those having access to this work may not copy, use or disclose the information in this work unless expressly authorized by Thermo Fisher Scientific.

Thermo Fisher SCIENTIFIC

INSTALLATION DIAGRAM
10−22E−2 BELT SCALE
48" IDLER SPACING
WITH CALIBRATION KIT

PART NO	DRAWING NUMBER	REV
	D16742A−B001	A

© 2012 by Thermo Fisher Scientific

ITEM	PART NO	QTY	DESCRIPTION	DWG NO/SPEC

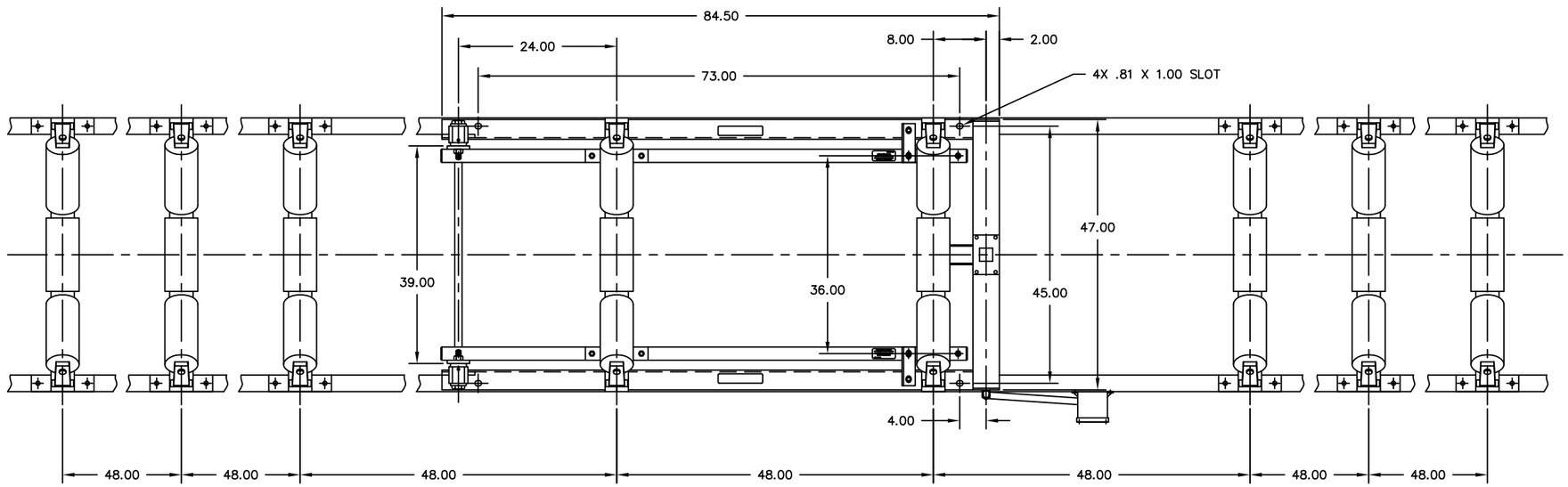

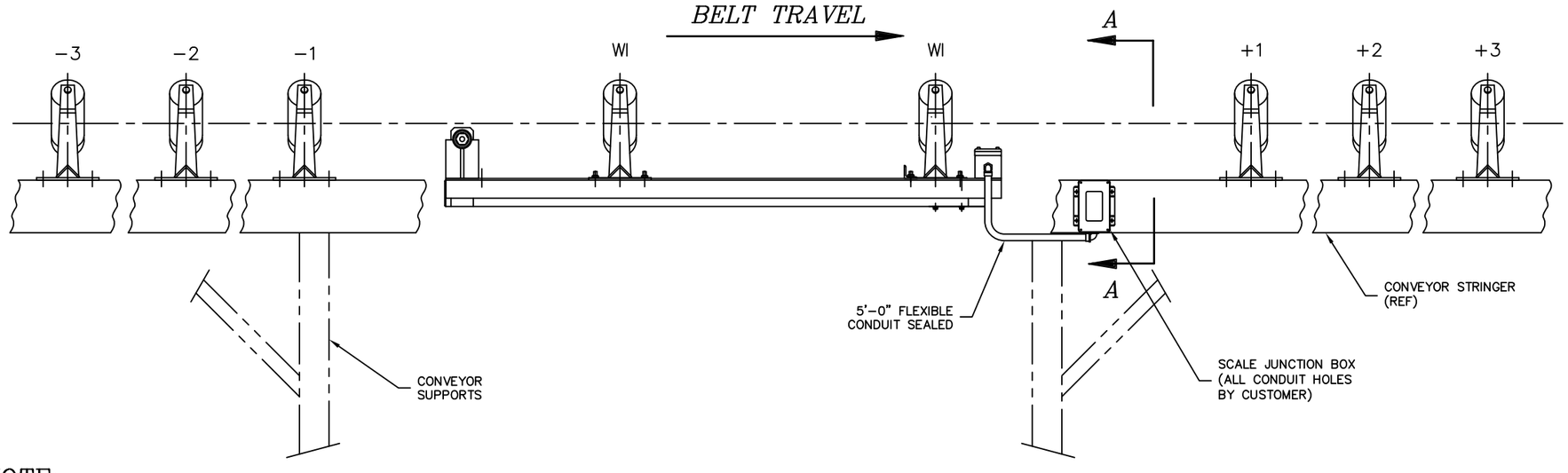

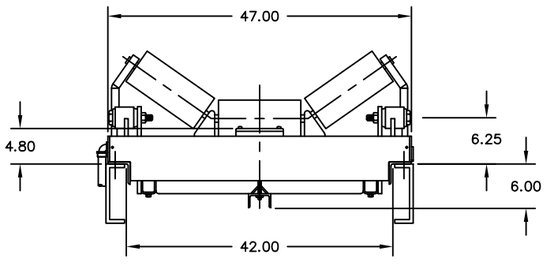

VIEW $A - A$

NOTE:

1. CONVEYOR SCALE ASSEMBLY SHIPPED COMPLETE WITHOUT WEIGH IDLER ATTACHED. SECURE ASSEMBLY TO STRINGERS WITH FOUR 1/2−13NC BOLTS.
2. IF THE SCALE IS LOCATED WITHIN 30'−0" OF THE HEAD PULLEY THE CROWN OF THE HEAD PULLEY CANNOT BE ABOVE THE TOP OF THE CARRY ROLLS.
3. A MINIMUM 8" CLEARANCE MUST BE ALLOWED BETWEEN RETURN BELT & TOP OF CONVEYOR STRINGER.
4. ALL IDLERS FROM +3 TO −3 MUST BE ALIGNED IN ACCORDANCE WITH INSTRUCTION MANUAL.
5. ALL IDLERS FROM +3 TO −3 MUST BE SHIMMED AS NECESSARY TO SAME PLANE 1/4" ABOVE BELT LINE.
6. ALL WIRING MUST BE DONE IN ACCORDANCE TO N.E.C. & INSTRUCTION MANUAL.
7. MECHANICAL TOLERANCE ON ALL DIMENSIONS ± 1/32"
8. DO NOT ALTER LOADCELL CABLE − EXCESS CABLE TO BE STORED IN BRIDGE ASSEMBLY.

CADD DATABASE: AUTOCAD

FOR APPROVAL ONLY

REV	ECO NO	MICRO	DESCRIPTION	DATE	BY / APPD
A			RELEASED	6/17/12	KIM / KIM

DO NOT SCALE DWG — REMOVE ALL BURRS AND UNNECESSARY SHARP EDGES

SCALE N/A

JOB NO C551554

TOLERANCE UNLESS SPECIFIED		OTHERWISE			
X	± 1	± .5 mm	ENG	KIM	DATE 6/17/12
.X	± .06	± 1.5 mm	DWN	KIM	DATE 6/17/12
.XX	± .03	± .76 mm			
.XXX	± .010	± .254 mm	CHK	KIM	DATE 6/17/12
FRACT.	± 1/16	± N/A			
ANGLES	± 1/2°	± 1/2°			

NEXT ASS'Y

CUST ORDER NO 16048

CUSTOMER LOCATION: THE ROBBINS CO. SOLON, OH

USER LOCATION

Derived From D07368A−C015

This document is confidential and is the property of Thermo Fisher Scientific. It may not be copied or reproduced in any way without the expressed written consent of Thermo Fisher Scientific. This document also is an unpublished work of Thermo Fisher Scientific. Thermo Fisher Scientific intends to and is maintaining this work as confidential information. Thermo Fisher Scientific also may seek to protect this work as an unpublished copyright. In the event of either inadvertent or deliberate publication, Thermo Fisher Scientific intends to enforce it's right to this work under the copyright laws as a published work. Those having access to this work may not copy, use or disclose the information in this work unless expressly authorized by Thermo Fisher Scientific.

Thermo Fisher SCIENTIFIC

INSTALLATION DIAGRAM
10−22E−2 BELT SCALE
48" IDLER SPACING

PART NO	DRAWING NUMBER	REV
	D16742A−B002	A

© 2012 by Thermo Fisher Scientific

ITEM	PART NO	QTY	DESCRIPTION	DWG NO/SPEC

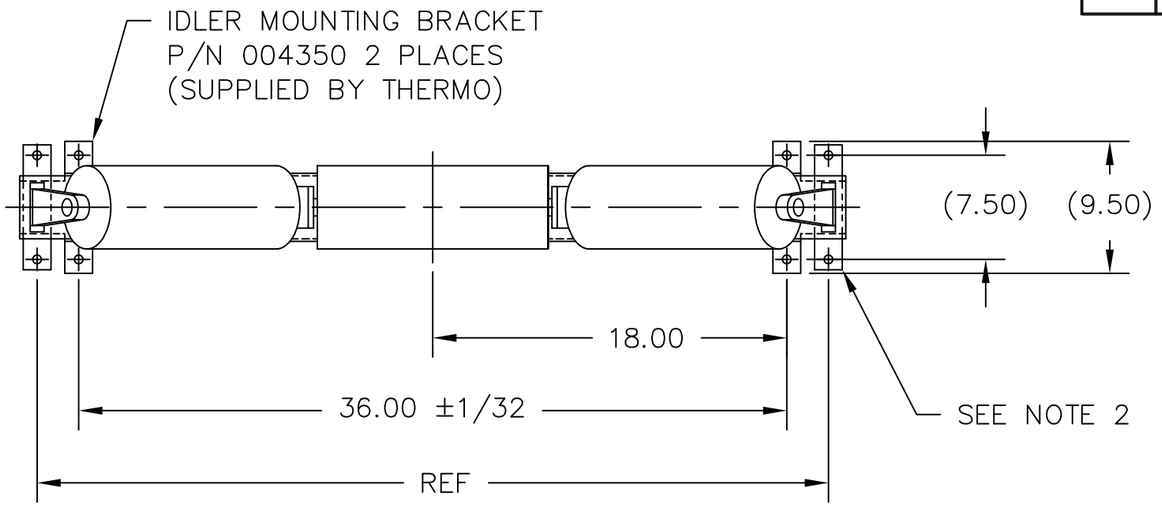

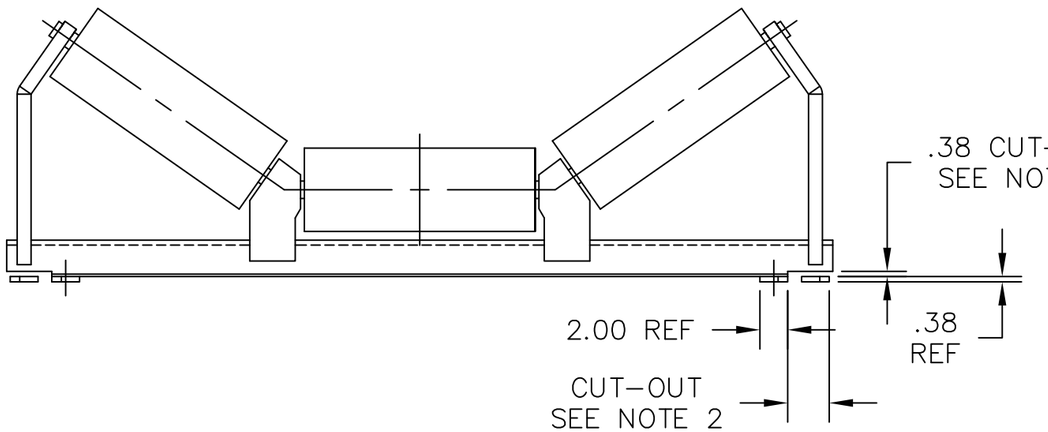

NOTE:

1. TROUGHING IDLER(S) SUPPLIED BY CUSTOMER.
2. REMOVE EXISTING MOUNTING FEET OR CHANNEL FROM IDLER BY TORCH CUTTING OR SAWING. MAKE CUT-OUTS AS SHOWN. WELD IDLER MOUNTING BRACKETS, P/N 004350, IN POSITION AS SHOWN.
3. MOUNTING BRACKETS MUST BE EQUALLY SPACED FROM IDLER CENTERLINE.

FOR APPROVAL ONLY

CADD DATABASE: AUTOCAD

DO NOT SCALE DWG REMOVE ALL BURRS AND UNNECESSARY SHARP EDGES	SCALE NONE		
	JOB NO C551554		
TOLERANCE UNLESS SPECIFIED OTHERWISE X ± .1 ± 3 mm .X ± .06 ± 1.5 mm .XX ± .03 ± .76 mm .XXX ± .010 ± .254 mm FRACT. ± 1/16 ± N/A ANGLES ± 1/2° ± 1/2°	ENG KIM	DATE 6/17/12	
	DWN KIM	DATE 6/17/12	
	CHK KIM	DATE 6/17/12	
NEXT ASS'Y			
CUST ORDER NO 16048			
CUSTOMER LOCATION	THE ROBBINS CO. SOLON, OH		
USER LOCATION			

This document is confidential and is the property of Thermo Fisher Scientific. It may not be copied or reproduced in any way without the expressed written consent of Thermo Fisher Scientific. This document also is an unpublished work of Thermo Fisher Scientific. Thermo Fisher Scientific intends to and is maintaining the work as confidential information. Thermo Fisher Scientific also may seek to protect this work as an unpublished copyright. In the event of either inadvertent or deliberate publication, Thermo Fisher Scientific intends to enforce it's right to this work under the copyright laws as a published work. Those having access to this work may not copy, use or disclose the information in this work unless expressly authorized by Thermo Fisher Scientific.

Thermo Fisher SCIENTIFIC

WEIGH IDLER MODIFICATION
36" BELT WIDTH
SERIES 10-22E SCALES

REV	ECO NO	MICRO	DESCRIPTION	DATE	BY / APPD
A			RELEASED	6/17/12	KIM / KIM

PART NO	DRAWING NUMBER	REV
	B16742A-B003	A

Derived From B07368A-D005

© 12 ,by Thermo Fisher Scientific

4 3 2 1 B A

ITEM	PART NO	QTY	DESCRIPTION	DWG NO/SPEC

NOTES:

1. ENCLOSURE NORYL GFN3 (NEMA 4X)

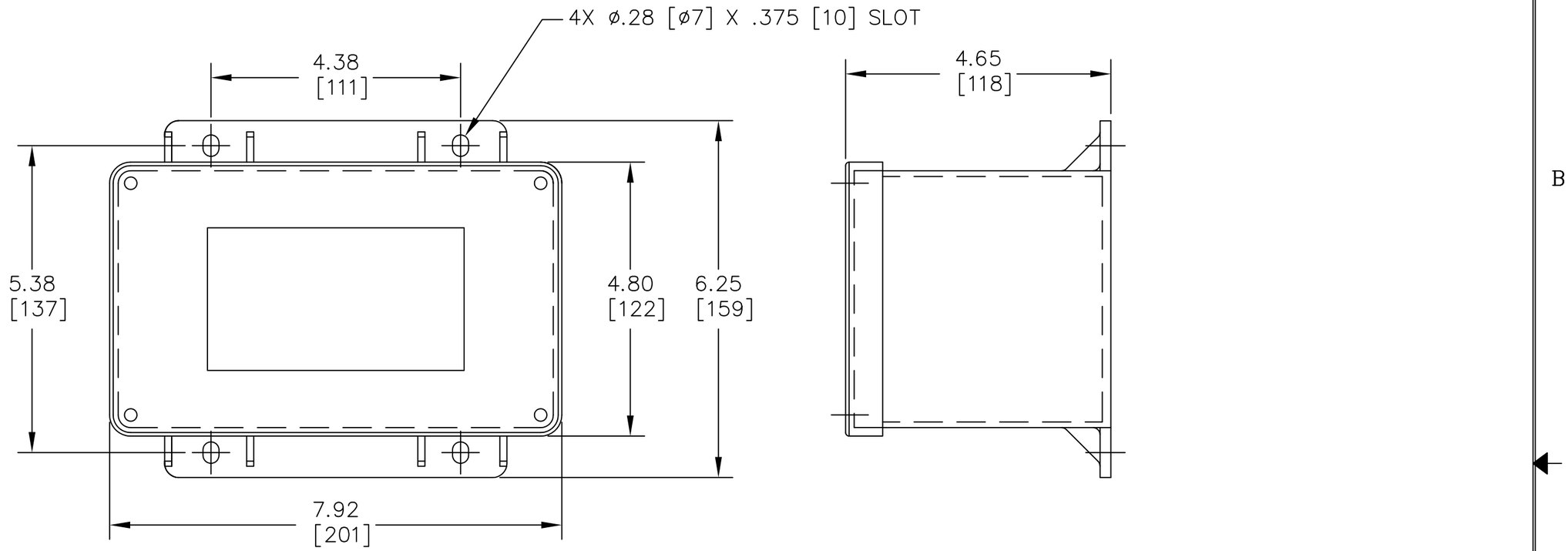

CADD DATABASE: AUTOCAD

FOR APPROVAL ONLY

DO NOT SCALE DWG REMOVE ALL BURRS AND UNNECESSARY SHARP EDGES	SCALE N/A JOB NO C551554		
TOLERANCE UNLESS SPECIFIED OTHERWISE X ± .1 ± 3 mm .X ± .06 ± 1.5 mm .XX ± .03 ± .76 mm .XXX ± .010 ± .254 mm FRACT. ± 1/16 ± N/A ANGLES ± 1/2° ± 1/2°	ENG KIM	DATE 6/17/12	
	DWN KIM	DATE 6/17/12	
	CHK KIM	DATE 6/17/12	
NEXT ASS'Y			
CUST ORDER NO 16048			
CUSTOMER LOCATION	THE ROBBINS CO. SOLON, OH		
USER LOCATION			

This document is confidential and is the property of Thermo Fisher Scientific. It may not be copied or reproduced in any way without the expressed written consent of Thermo Fisher Scientific. This document also is an unpublished work of Thermo Fisher Scientific. Thermo Fisher Scientific intends to and is maintaining the work as confidential information. Thermo Fisher Scientific also may seek to protect this work as an unpublished copyright. In the event of either inadvertent or deliberate publication, Thermo Fisher Scientific intends to enforce it's right to this work under the copyright laws as a published work. Those having access to this work may not copy, use or disclose the information in this work unless expressly authorized by Thermo Fisher Scientific.

Thermo Fisher SCIENTIFIC

OUTLINE & MOUNTING
SCALE JUNCTION BOX
NEMA-4X ENCLOSURE

PART NO	DRAWING NUMBER	REV
	B16742A-B004	A

REV	ECO NO	MICRO	DESCRIPTION	DATE	BY / APPD
A			RELEASED	6/17/12	KIM / KIM

Derived From B07239B-C002

© 12 ,by Thermo Fisher Scientific

4 3 2 1

B A

ITEM	PART NO	QTY	DESCRIPTION	DWG NO/SPEC
1	042615	1 EA	SENSOR,MTN,PROX,HAZ/CND,30 MM	
2	042677	1 EA	KIT,SENSOR MOUNTING,60-220	

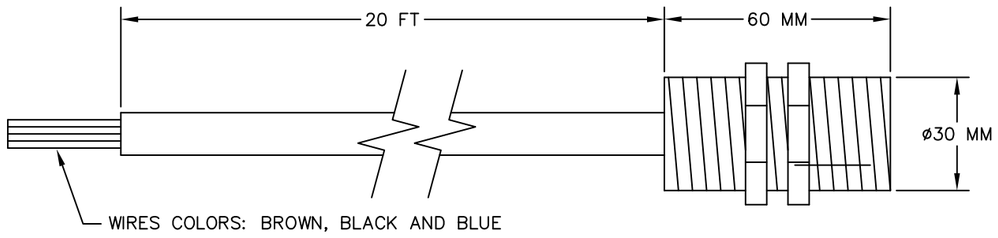

ITEM 1

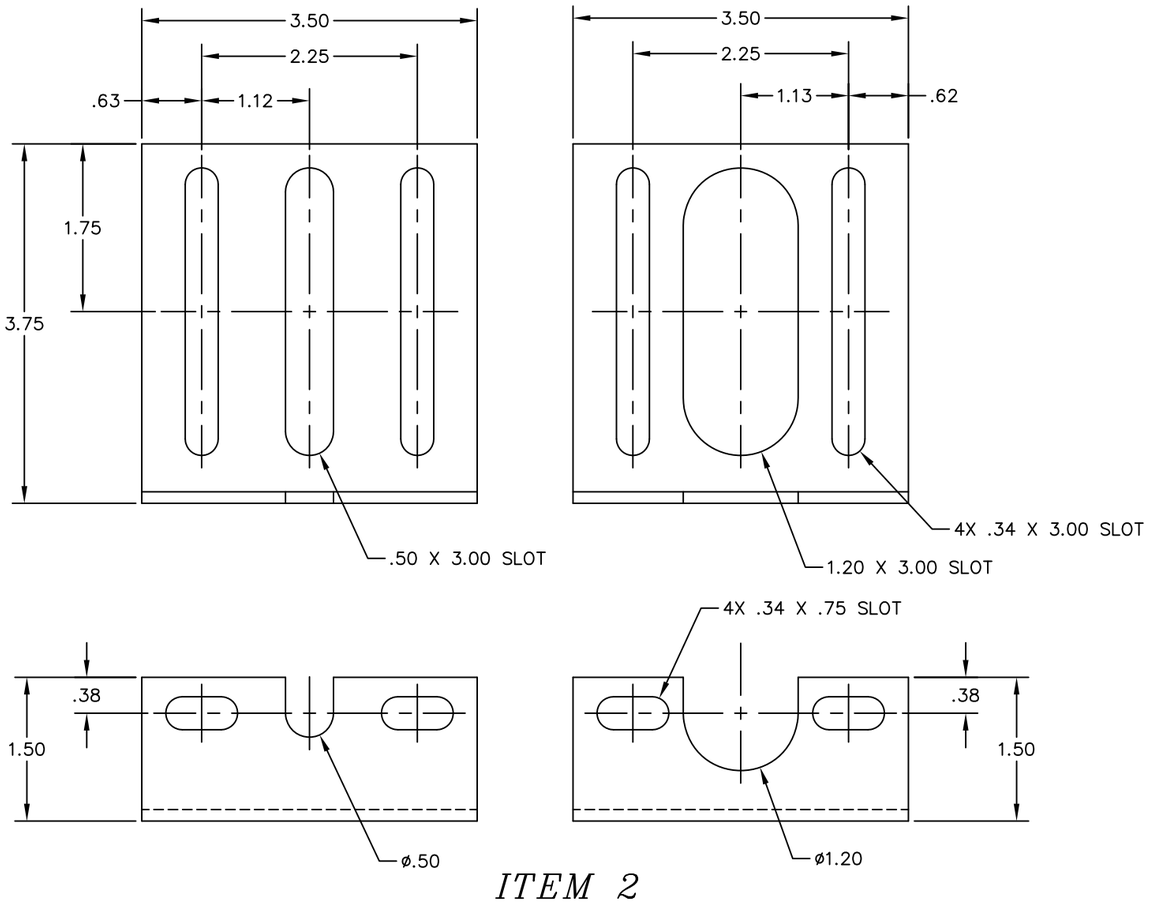

ITEM 2

NOTES:

1. OPERATING SPEED RANGE: UP TO 5000 RPM
2. OPERATING TEMPERATURE RANGE: −25° C TO + 50° C
3. ALL WIRING MUST BE IN ACCORDANCE WITH THE NATIONAL ELECTRIC CODES AND ALL LOCAL CODES.
4. ALL MOUNTING HARDWARE SUPPLIED IN SENSOR MOUNTING KIT (ITEM 2) IS 5/16" SIZE.

FOR APPROVAL ONLY

CADD DATABASE: AUTOCAD

REV	ECO NO	MICRO	DESCRIPTION	DATE	BY / APPD
A			RELEASED	6/18/12	KIM / KIM

DO NOT SCALE DWG
REMOVE ALL BURRS AND UNNECESSARY SHARP EDGES

SCALE N/A
JOB NO C551554

TOLERANCE UNLESS SPECIFIED OTHERWISE			
X	± 1	± 3 mm	
.X	± .06	± 1.5 mm	
.XX	± .03	± 76 mm	
.XXX	± .010	± 254 mm	
FRACT.	± 1/16	± N/A	
ANGLES	± 1/2°	± 1/2°	

ENG	KIM	DATE 6/18/12
DWN	KIM	DATE 6/18/12
CHK	KIM	DATE 6/18/12

NEXT ASS'Y

CUST ORDER NO 16048

CUSTOMER LOCATION: THE ROBBINS CO. SOLON, OH

USER LOCATION:

Derived From D07209H-C103

This document is confidential and is the property of Thermo Fisher Scientific. It may not be copied or reproduced in any way without the expressed written consent of Thermo Fisher Scientific. This document also is an unpublished work of Thermo Fisher Scientific. Thermo Fisher Scientific intends to and is maintaining the work as confidential information. Thermo Fisher Scientific also may seek to protect this work as an unpublished copyright. In the event of either inadvertent or deliberate publication, Thermo Fisher Scientific intends to enforce it's right to this work under the copyright laws as a published work. Those having access to this work may not copy, use or disclose the information in this work unless expressly authorized by Thermo Fisher Scientific.

Thermo Fisher SCIENTIFIC

PROX SWITCH
60-22H-1
WITH MOUNTING KIT

PART NO	DRAWING NUMBER	REV
	C16742A-B005	A

© 2012 ,by Thermo Fisher Scientific

ITEM	PART NO	QTY	DESCRIPTION	DWG NO/SPEC

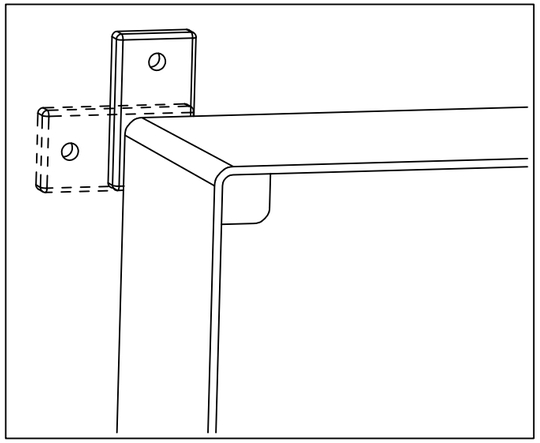

2–POSITION MOUNTING FOOT

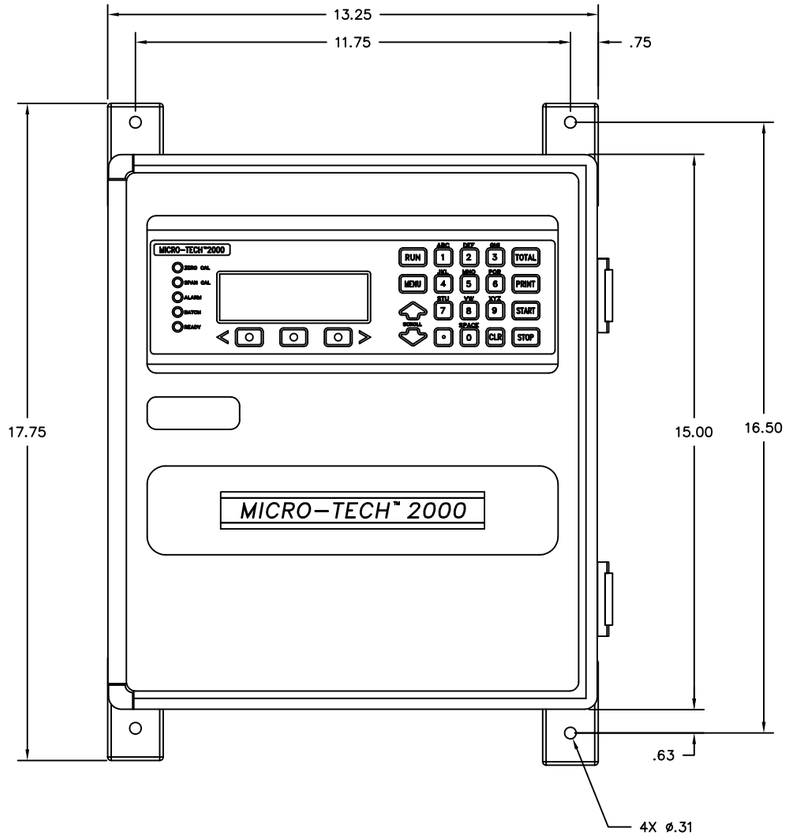

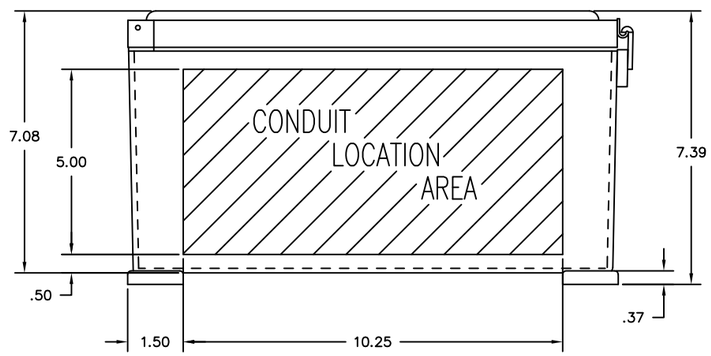

NOTES:

1. ENCLOSURE: – BLUE FIBERGLASS
   – NEMA–3,4X AND 12
   – IP 61 THROUGH 65
   – TWO LOCKABLE, QUICK RELEASE STAINLESS STEEL LATCHES
   – UL TYPE 4X CLEAR ACRYLIC WINDOW
2. ALL CONDUIT ENTRANCES TO BE MADE THROUGH BOTTOM OF ENCLOSURE.
3. NON–METALLIC ENCLOSURE DOES NOT PROVIDE GROUND BONDING BETWEEN CONDUIT ENTRIES. SUITABLE GROUND BONDING MUST BE PROVIDED AT INSTALLATION.

FOR APPROVAL ONLY

CADD DATABASE: AUTOCAD

REV	ECO NO	MICRO	DESCRIPTION	DATE	BY / APPD
A			RELEASED	6/17/12	KIM / KIM

DO NOT SCALE DWG — REMOVE ALL BURRS AND UNNECESSARY SHARP EDGES

SCALE N/A

JOB NO C551554

TOLERANCE UNLESS SPECIFIED OTHERWISE

X	±.1	±3 mm
.X	±.06	±1.5 mm
.XX	±.03	±.76 mm
.XXX	±.010	±.254 mm
FRACT.	±1/16	±N/A
ANGLES	±1/2°	±1/2°

ENG	KIM	DATE 6/17/12
DWN	KIM	DATE 6/17/12
CHK	KIM	DATE 6/17/12

NEXT ASS'Y

CUST ORDER NO 16048

CUSTOMER LOCATION: THE ROBBINS CO. SOLON, OH

USER LOCATION

This document is confidential and is the property of Thermo Fisher Scientific. It may not be copied or reproduced in any way without the expressed written consent of Thermo Fisher Scientific. This document also is an unpublished work of Thermo Fisher Scientific. Thermo Fisher Scientific intends to and is maintaining the work as confidential information. Thermo Fisher Scientific also may seek to protect this work as an unpublished copyright. In the event of other inadvertent or deliberate publication, Thermo Fisher Scientific intends to enforce it's right to the work under the copyright laws as a published work. Those having access to this work may not copy, use or disclose the information in this work unless expressly authorized by Thermo Fisher Scientific.

Thermo Fisher SCIENTIFIC

OUTLINE & MOUNTING
FIELD MOUNT VERSION
MICRO–TECH 2000

PART NO	DRAWING NUMBER	REV
	D16742A–B006	A

Derived From D07257B–B001

© 2012 by Thermo Fisher Scientific

ITEM	PART NO	QTY	DESCRIPTION	DWG NO/SPEC

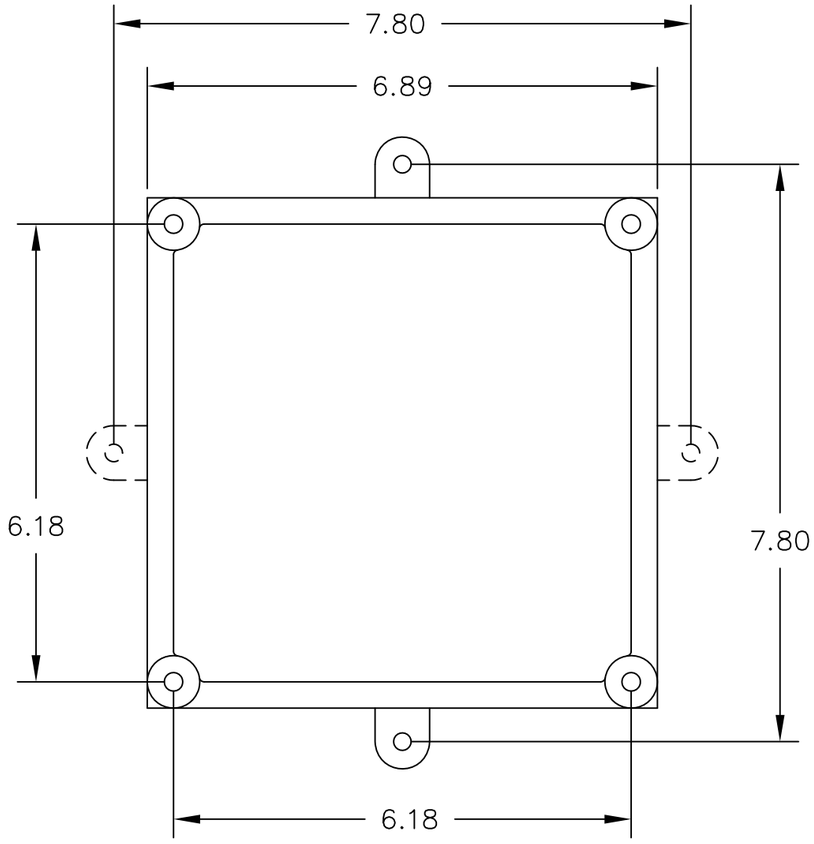

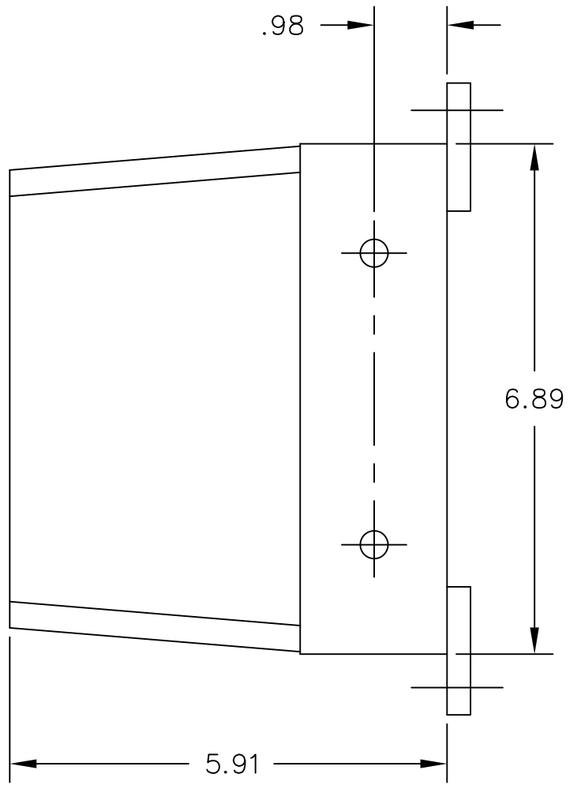

FOR APPROVAL ONLY

CADD DATABASE: AUTOCAD

NOTES:

1. ENCLOSURE: POLYCARBONATE, IMPACT RESISTANT FLAME RETARDANT & DUSTPROOF TO IEC529: IP65

DO NOT SCALE DWG
REMOVE ALL BURRS AND UNNECESSARY SHARP EDGES

SCALE 1/2

JOB NO C551554

TOLERANCE UNLESS SPECIFIED OTHERWISE					
X	± .1	± 3 mm	ENG KIM	DATE 6/19/12
.X	± .06	± 1.5 mm	DWN KIM	DATE 6/19/12
.XX	± .03	± .76 mm	CHK KIM	DATE 6/19/12
.XXX	± .010	± .254 mm		
FRACT.	± 1/16	± N/A		
ANGLES	± 1/2°	± 1/2°		

NEXT ASS'Y

CUST ORDER NO 16048

CUSTOMER LOCATION	THE ROBBINS CO. SOLON, OH
USER LOCATION	

This document is confidential and is the property of Thermo Fisher Scientific. It may not be copied or reproduced in any way without the expressed written consent of Thermo Fisher Scientific. This document also is an unpublished work of Thermo Fisher Scientific. Thermo Fisher Scientific intends to and is maintaining the work as confidential information. Thermo Fisher Scientific also may seek to protect this work as an unpublished copyright. In the event of either inadvertent or deliberate publication, Thermo Fisher Scientific intends to enforce it's right to this work under the copyright laws as a published work. Those having access to this work may not copy, use or disclose the information in this work unless expressly authorized by Thermo Fisher Scientific.

Thermo Fisher SCIENTIFIC

OUTLINE AND MOUNTING DIMENSIONS
MTL #MT5 BARRIER ENCLOSURE

REV	ECO NO	MICRO	DESCRIPTION	DATE	BY / APPD
A			RELEASED	6/19/12	KIM / KIM

PART NO	DRAWING NUMBER	REV
	B16742A-B007	A

Derived From B07046R-A083

©2012 ,by Thermo Fisher Scientific

4 3 2 1

B A

ITEM	PART NO	QTY	DESCRIPTION	DWG NO/SPEC

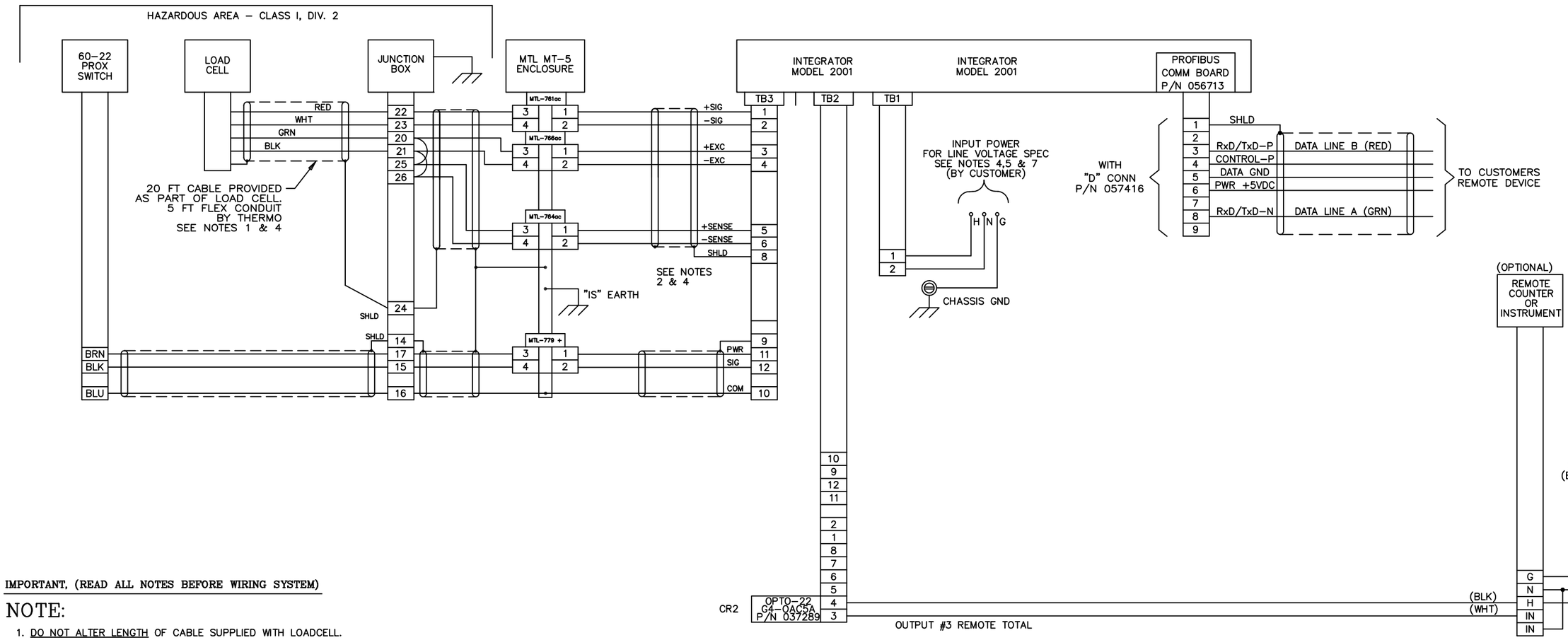

IMPORTANT, (READ ALL NOTES BEFORE WIRING SYSTEM)

NOTE:

1. DO NOT ALTER LENGTH OF CABLE SUPPLIED WITH LOADCELL.
2. USE BELDEN 8407 OR EQUIVALENT, 4 CONDUCTOR (P/N 003727), 16 AWG. SHIELDED IF TOTAL LENGTH IS 200 FEET OR LESS. BELDEN 9260 (P/N 011416) OR EQUIVALENT. 6 CONDUCTOR, 20 AWG, SHIELDED IF TOTAL LENGTH IS 201 TO 3,000 FEET. SENSE CONNECTIONS ARE REQUIRED IF TOTAL LENGTH IS OVER 200 FEET. SET JUMPERS OP10 AND OP11 ON MOTHER BOARD TO POSITION "B".
3. SPEED SENSOR: USE BELDEN 8772 (P/N 002346) OR EQUIVALENT. 3 CONDUCTOR, 20 AWG. SHIELDED MAX DISTANCE IS 200 FEET.
4. DO NOT RUN SIGNAL, LOADCELL, OR SPEED SENSOR CABLES IN SAME CONDUIT AS POWER WIRING. CONNECT SHIELDS ONLY WHERE SHOWN.
5. INPUT POWER REQUIREMENTS (FACTORY SET AT 120 VAC)
   - A. 110 VAC +10%/–15% 1/2 AMP 50 VA,50/60HZ
   - B. 120 VAC +10%/–15% 1/2 AMP 50 VA,50/60HZ
   - C. 220 VAC +10%/–15% 1/4 AMP 50 VA,50/60HZ
   - D. 240 VAC +10%/–15% 1/4 AMP 50 VA,50/60HZ
6. EARTH GROUND ALL ELECTRICAL ENCLOSURES.
7. ALL WIRING MUST BE IN ACCORDANCE WITH THE NATIONAL ELECTRIC CODE AND ALL LOCAL CODES. ALL WIRING, EXCEPT AS NOTED, IS THE RESPONSIBILITY OF THE CUSTOMER.
8. ANALOG OUTPUT: USE BELDEN 8760 (P/N 003249) OR EQUIVALENT, 2 CONDUCTOR, 18 AWG. SHIELDED CABLE, MAX CABLE LENGTH IS 5000 FEET.

FOR APPROVAL ONLY

CADD DATABASE: AUTOCAD

REV	ECO NO	MICRO	DESCRIPTION	DATE	BY / APPD
A			RELEASED	6/17/12	KIM / KIM

DO NOT SCALE DWG
REMOVE ALL BURRS AND UNNECESSARY SHARP EDGES

SCALE N/A
JOB NO C551554

TOLERANCE UNLESS SPECIFIED OTHERWISE		
X	±.1	±3 mm
.X	±.06	±1.5 mm
.XX	±.03	±.76 mm
.XXX	±.010	±.254 mm
FRACT.	±1/16	N/A
ANGLES	±1/2°	±1/2°

ENG	KIM	DATE 6/18/12
DWN	KIM	DATE 6/18/12
CHK	KIM	DATE 6/18/12

NEXT ASS'Y
CUST ORDER NO 16048
CUSTOMER LOCATION: THE ROBBINS CO. SOLON, OH
USER LOCATION:

This document is confidential and is the property of Thermo Fisher Scientific. It may not be copied or reproduced in any way without the expressed written consent of Thermo Fisher Scientific. This document also is an unpublished work of Thermo Fisher Scientific. Thermo Fisher Scientific intends to and is maintaining the work as confidential information. Thermo Fisher Scientific also may seek to protect this work as an unpublished copyright. In the event of either inadvertent or deliberate publication, Thermo Fisher Scientific intends to enforce it's right to this work under the copyright laws as a published work. Those having access to this work may not copy, use or disclose the information in this work unless expressly authorized by Thermo Fisher Scientific.

Thermo Fisher SCIENTIFIC

FIELD WIRING DIAGRAM
10–20/22 BELT SCALE
W/ 2001 INTEGRATOR, PROFIBUS
BARRIERS & 60–22H PROX

PART NO	DRAWING NUMBER	REV
	D16742A–E001	A

Derived From D13999A–E571

© 12 Jay Thermo Fisher Scientific

FIELD INSTALLATION NOTES:

1. BEFORE INSTALLING, VERIFY THAT PART NUMBER MATCHES BELT WIDTH.
2. THIS CALIBRATION KIT HAS BEEN PRE-ASSEMBLED AND SHIPPED AS A UNIT WITH THE LIFTING HANDLE PACKED SEPARATELY.
3. FOR MOUNTING CAL WEIGHT SUPPORTS ON SCALES, REFER TO APPROPRIATE WEIGHT SUPPORT OR SCALE INSTALLATION DRAWING.
4. THE STATIC CALIBRATION KIT SHOULD BE PLACED IN POSITION ACCORDING TO THE SCALE INSTALLATION DRAWING. LOCATE AND DRILL MOUNTING HOLES IN THE CONVEYOR STRINGER THEN ATTACH USING 1/2" HARDWARE.
5. WITH CALIBRATION KIT AND WEIGHT SUPPORTS IN PLACE, CHECK TO MAKE SURE THAT A CLEARANCE OR BINDING PROBLEM DOES NOT EXIST. USING THE LIFTING HANDLE, THE CALIBRATION WEIGHT CAN BE LOWERED ONTO THE SCALE CARRIAGE. AGAIN, CHECK FOR CLEARANCE AND THAT BINDING DOES NOT EXIST. RETURN CALIBRATION WEIGHT TO THE STORED POSITION.
6. REFER TO APPROPRIATE THERMO INTEGRATOR MANUAL FOR CONFIGURATION AND CALIBRATION PROCEDURES.

ITEM	PART NO	QTY	DESCRIPTION	DWG NO/SPEC
1	.	1 EA	BAR,CAL WT,CAL KIT,50-30,36"	.
2	042588	1 EA	BRKT,MTG,SET,CAL KIT,50-30	C07217A-A003
3	042589	2 EA	ARM,LEVER,CAL KIT 50-30	C07217A-A004
4	042572	1 EA	ARM,CRANK,STATIC CAL KIT	C07216A-A006
5	042530	2 EA	BRG,FLG,2 BOLT,1.000 BORE	
6	042531	4 EA	BRG,ROLL END, .500 X 1.049 X .625	
7	003128	2 EA	WASHER,FLAT, 1/2 ZN	
8	003133	2 EA	SCR,SHLDR,SCH, 1/2 X2.000 BLK	
9	042532	4 EA	SCR,SHLDR,SCH, 3/8 X .375 STL	
10	042594	1 EA	SHAFT,CAM,CAL KIT,50-30,36"	C07217A-A005-36
11				
12	044929	4 EA	SCR,CARRIAGE,5/16-18X1.25 ZN	
13	005377	4 EA	NUT,HEX,5, 5/16-18 ZN	
14	003130	8 EA	WASHER,FLAT, 5/16 ZN	
15	003127	4 EA	WASHER,LOCK,SPRING, 5/16 ZN	
16	017971	4 DP	ADHESIVE,THDLKR,REM,1/4" & LGER	

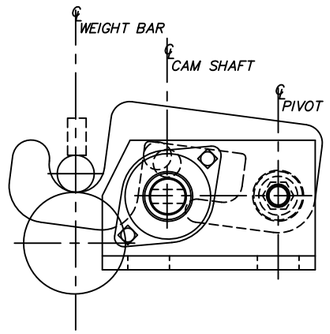

RAISED – STORAGE POSITION

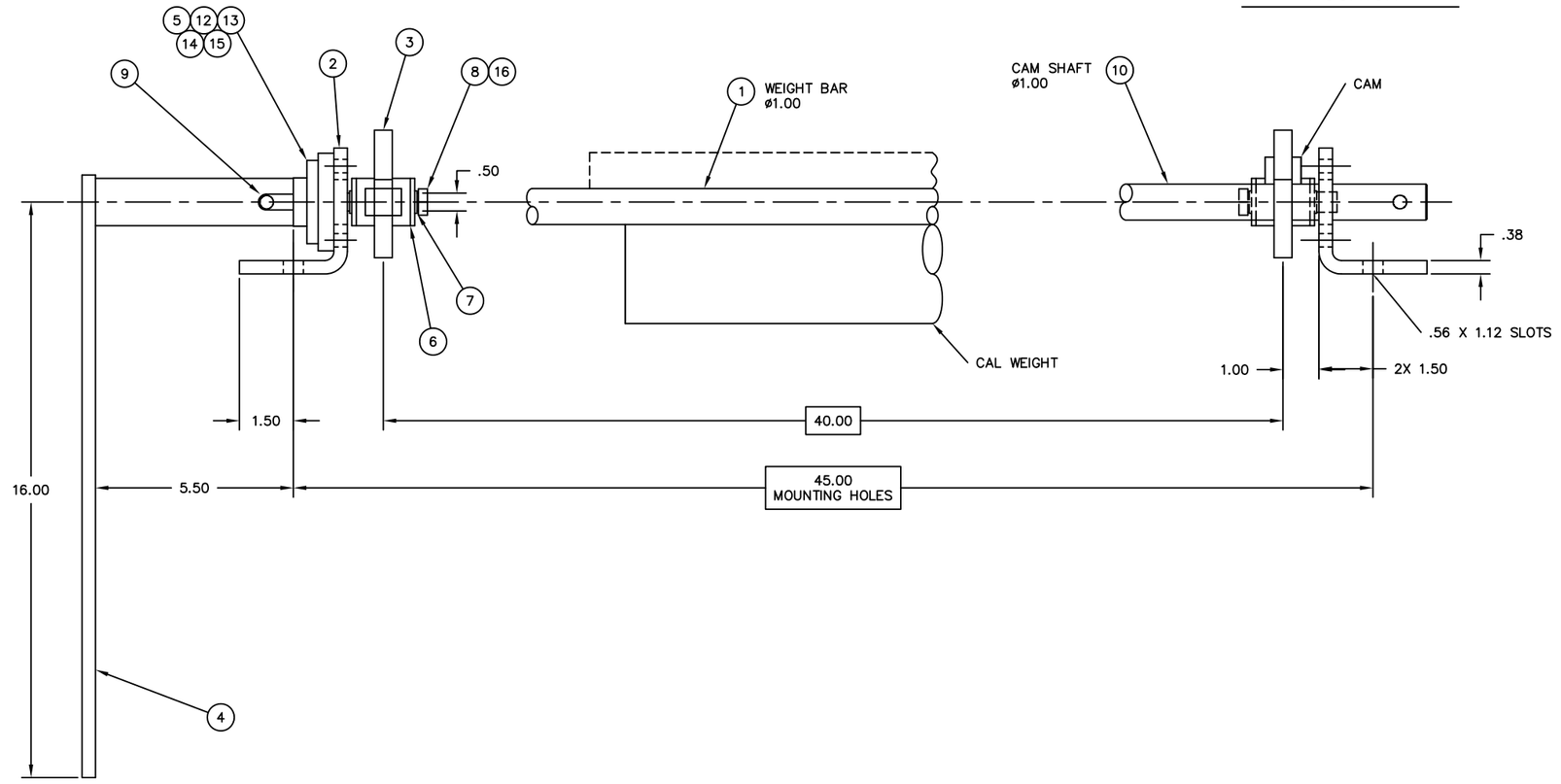

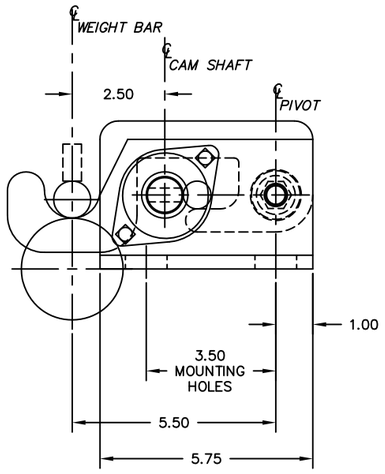

LOWERED – USAGE POSITION

CADD DATABASE: AUTOCAD

FOR APPROVAL ONLY

REV	ECO NO	MICRO	DESCRIPTION	DATE	BY / APPD
A			RELEASED	6/18/12	KIM / KIM

DO NOT SCALE DWG — REMOVE ALL BURRS AND UNNECESSARY SHARP EDGES

SCALE 1/2

JOB NO C551554

TOLERANCE UNLESS SPECIFIED OTHERWISE: X ± .1 ± 3 mm; .X ± .06 ± 1.5 mm; .XX ± .03 ± .76 mm; .XXX ± .010 ± .254 mm; FRACT. ± 1/16 N/A; ANGLES ± 1/2° ± 1/2°

ENG	KIM	DATE 6/18/12
DWN	KIM	DATE 6/18/12
CHK	KIM	DATE 6/18/12

NEXT ASS'Y

CUST ORDER NO 16048

CUSTOMER LOCATION: THE ROBBINS CO. SOLON, OH

USER LOCATION:

Derived From D07217A-A001

This document is confidential and is the property of Thermo Fisher Scientific. It may not be copied or reproduced in any way without the expressed written consent of Thermo Fisher Scientific. This document also is an unpublished work of Thermo Fisher Scientific. Thermo Fisher Scientific intends to and is maintaining the work as confidential information. Thermo Fisher Scientific also may seek to protect this work as an unpublished copyright. In the event of either inadvertent or deliberate publication, Thermo Fisher Scientific intends to enforce it's right to this work under the copyright laws as a published work. Those having access to this work may not copy, use or disclose the information in this work unless expressly authorized by Thermo Fisher Scientific.

ThermoFisher SCIENTIFIC

STATIC CAL KIT
50-30
36" SCALE

PART NO	DRAWING NUMBER	REV
	D16742A-H001	A

© 12 Jay Thermo Fisher Scientific